Dynamics of Machinery

Credits: 3

Lecturer: Abbasi

Cam & cam follower

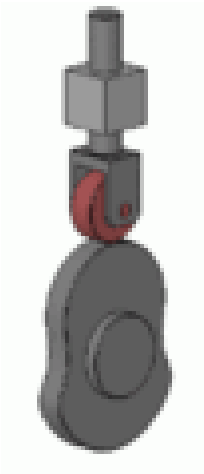

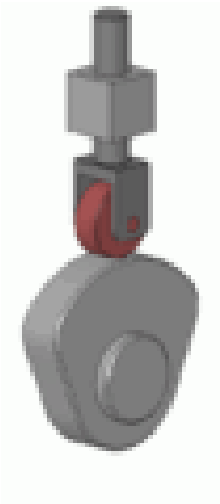

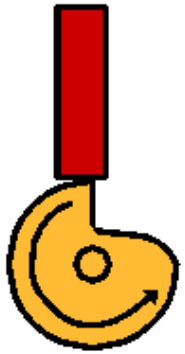

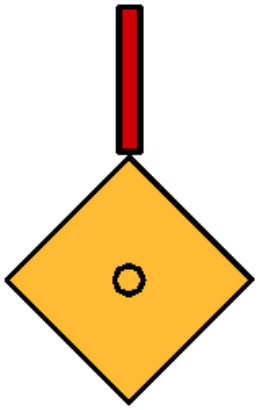

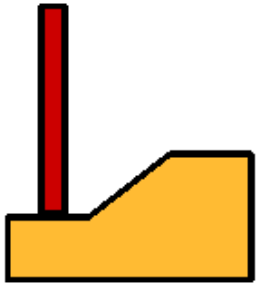

Cams classification

Disc or plate cam

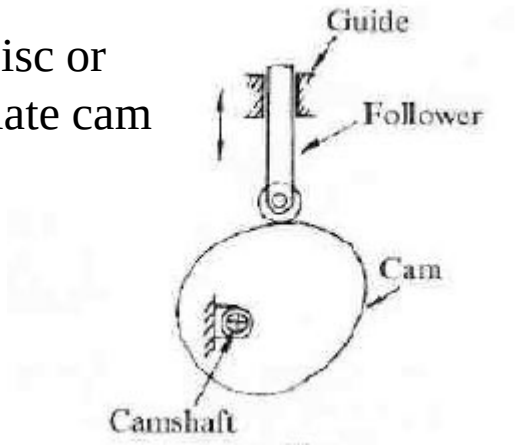

Cylindrical cam

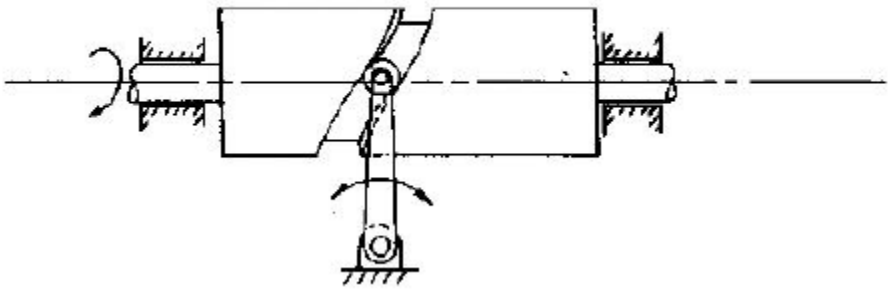

Translating cam

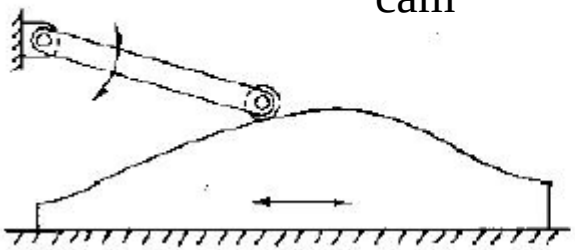

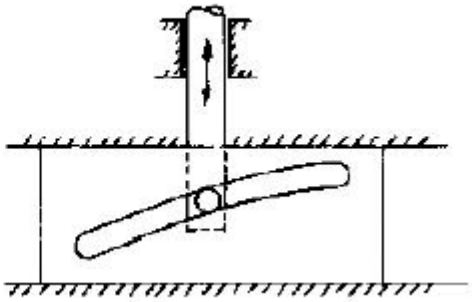

Followers classification

1. Based on surface in co
(a) Knife edge follower
(b) Roller follower
(c) Flat faced follower
(d) Spherical follower

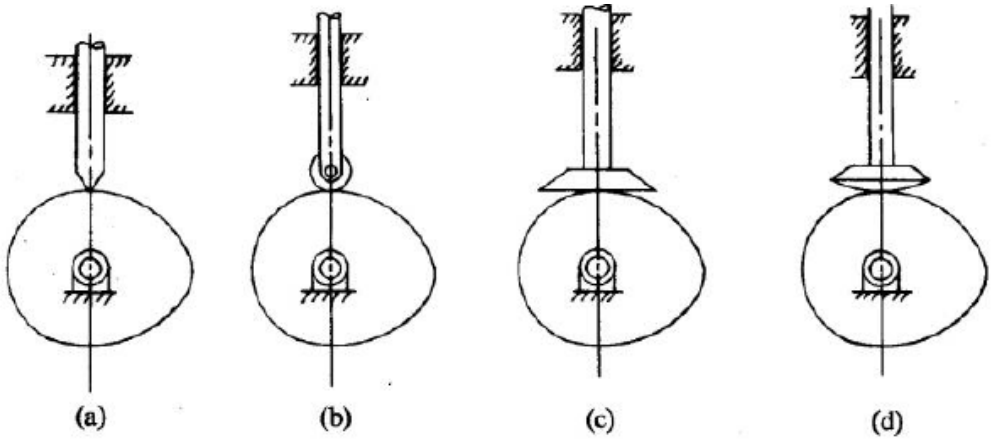

2. Based on type of motion:
(a) Oscillating follower
(b) Translating follower

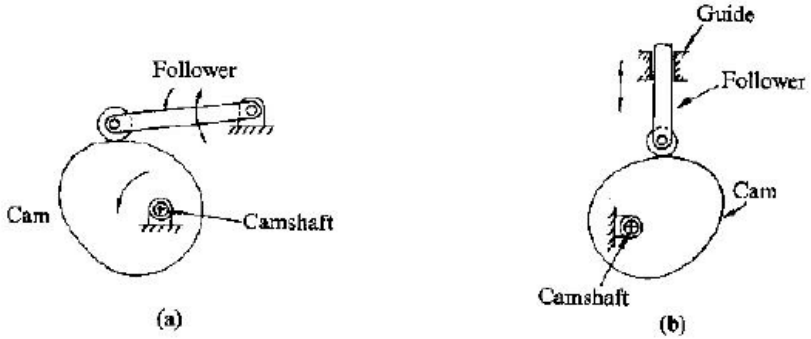

3. Based on line of motion:
(a) Radial follower
(b) (b) Off-set follower:

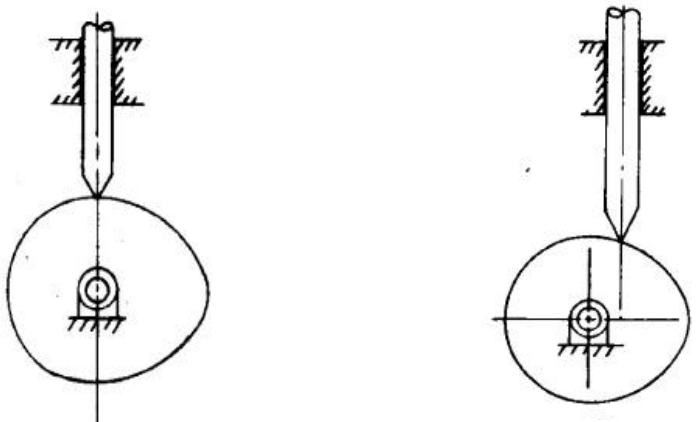

Terminology

Cam Profile
The contour of the working surface of the cam.

Tracer Point
The point at the knife edge of a follower, or the center of a roller, or the center of a spherical face.

Pitch Curve
The path of the tracer point.

Base Circle
The smallest circle drawn, tangential to the cam profile, with its center on the axis of the camshaft. The size of the base circle determines the size of the cam.

Prime Circle
The smallest circle drawn, tangential to the pitch curve, with its center on the axis of the camshaft.

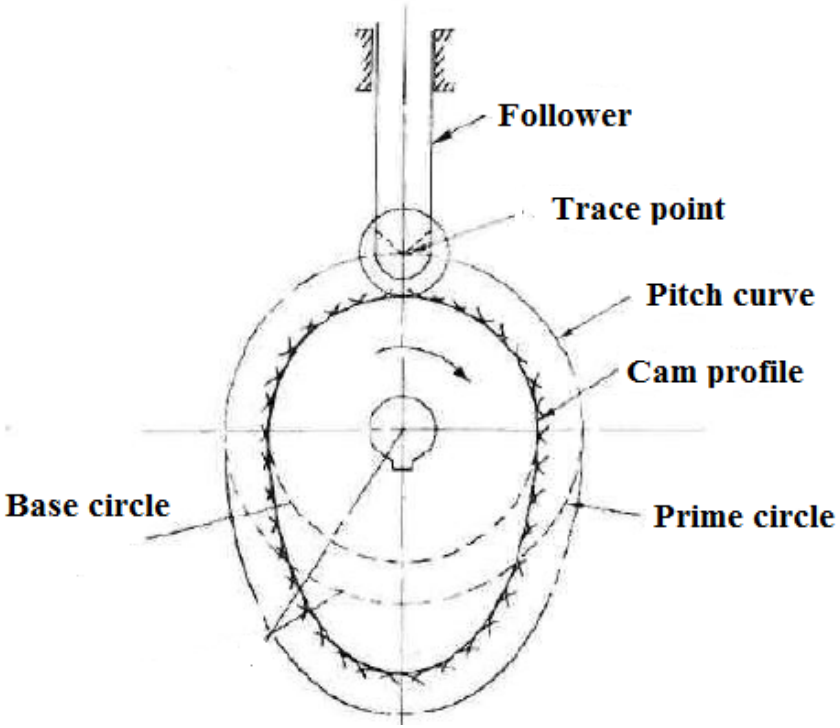

Uniform velocity

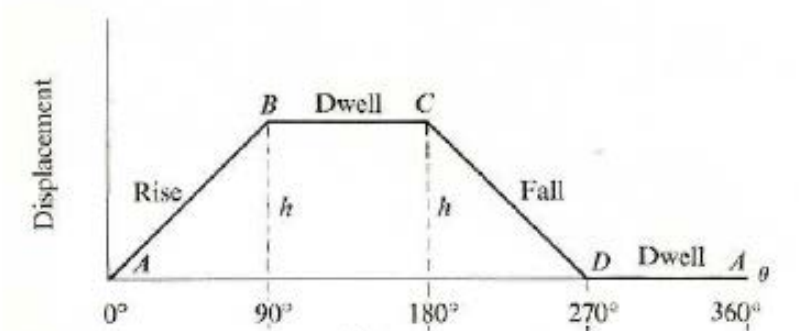

Modified uniform velocity

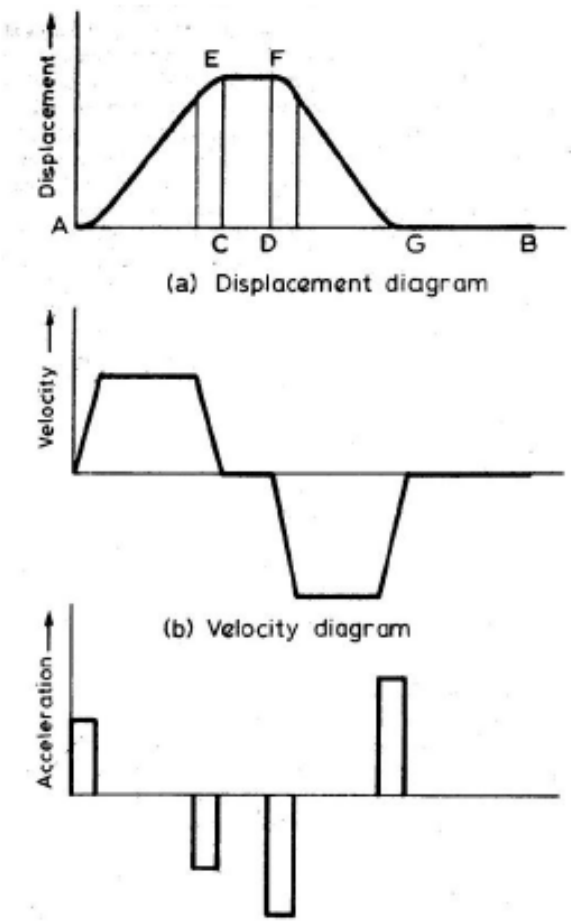

Uniform acceleration and retardation

s = Stroke of the follower
θo and θr = Angular displacement of the cam during outstroke and return stroke.
ω = Angular velocity of cam.

Time required for follower outstroke
to =θo/ ω
Time required for follower return stroke
tr = θr/ ω

Average velocity of follower =s/t
Max. velocity during outstroke= 2 ωs/ θo
Max. velocity during return stroke= 2 ωs/ θr

Acceleration of the follower during outstroke = ao=4 ω²s/ θo
Acceleration of the follower during ret.stroke = ar=4 ω²s/ θr

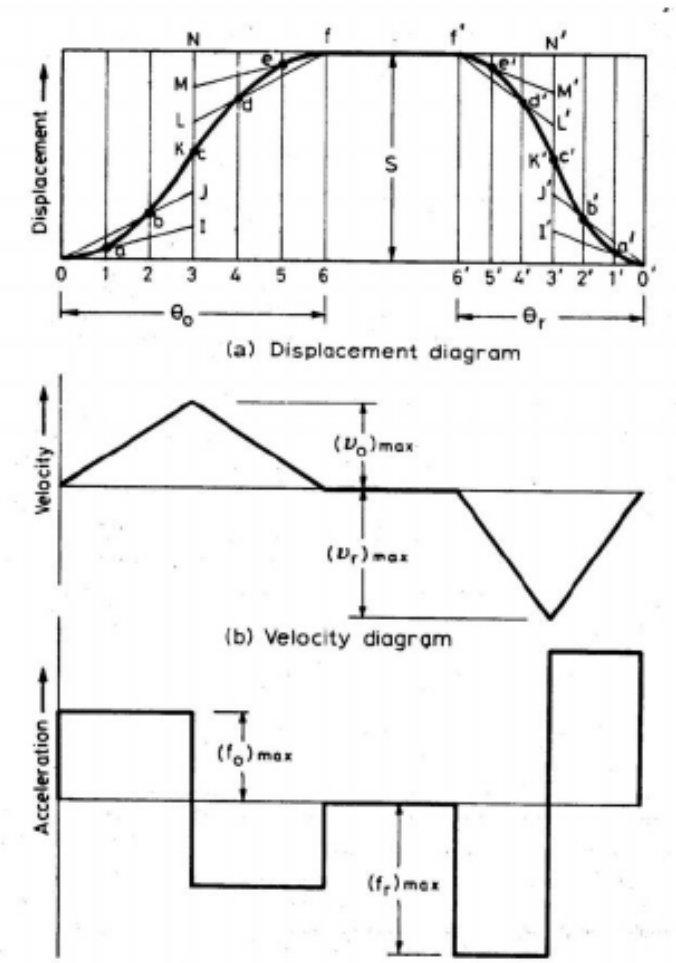

Simple harmonic motion (SHM)

s = Stroke of the follower
θo and θr = Angular displacement of the cam during outstroke and return stroke.
ω = Angular velocity of cam.

Time required for follower outstroke; to =θo/ ω
Time required for follower return stroke; tr = θr/ ω

Average velocity of follower =s/t
Max. velocity during outstroke= πωs/ 2θo
Max. velocity during return stroke= πωs/2 θr

Acceleration of the follower during outstroke = ao= 4 ω²s/ θo
Acceleration of the follower during ret.stroke = ar = 4 ω²s/ θr

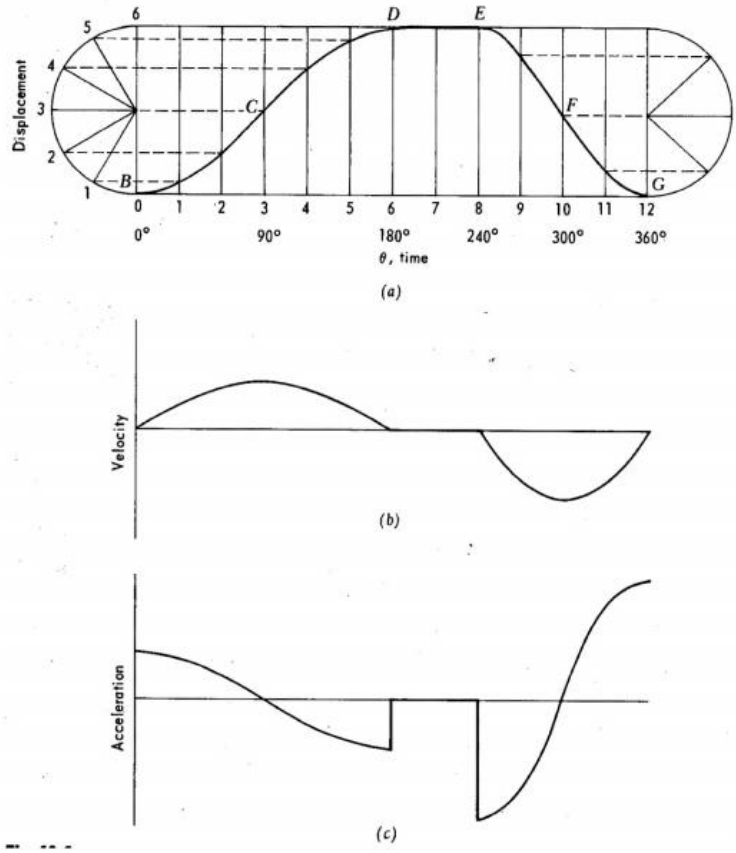

Example

Follower type = Knife edged, in-line; lift = 50mm; base circle radius = 50mm; out stroke with SHM, for 60° cam rotation; dwell for 45º cam rotation; return stroke with SHM, for 90º cam rotation; dwell for the remaining period. Draw cam profile and determine max. velocity and acceleration during out stroke and return stroke if the cam rotates at 1000 rpm in clockwise direction.

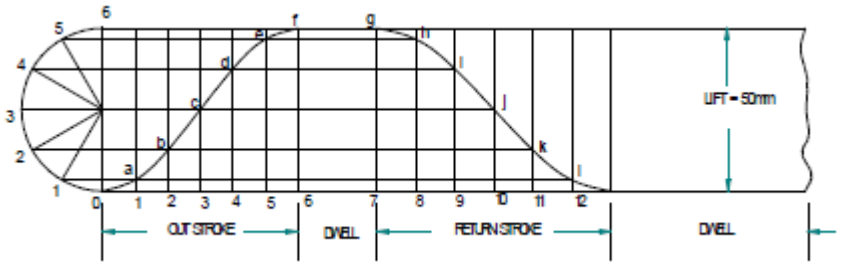

Angular velocity of cam = $\omega = \frac{2\pi N}{60} = \frac{2\times\pi\times 1000}{60}$ = **104.76 rad/sec**

Max. velocity of follower during outstroke = $vo_{max} = \frac{\pi\omega s}{2\theta_o} =$

$= \frac{\pi\times 104.76\times 50}{2\times \pi/3}$ = 7857mm/sec = **7.857m/sec**

Similarly Max. velocity of follower during return stroke = , $vr_{max} = \frac{\pi\omega s}{2\theta_r} =$

$= \frac{\pi\times 104.76\times 50}{2\times \pi/2}$ = 5238mm/sec = **5.238m/sec**

Max. acceleration during outstroke = $ao_{max} = r\omega^2_p$ (from d3) = $\frac{\pi^2\omega^2 s}{2\theta_o^2} =$

$= \frac{\pi^2\times(104.76)^2\times 50}{2\times(\pi/3)^2}$ = 2469297.96mm/sec^2 = **2469.3m/sec^2**

Similarly, Max. acceleration during return stroke = $ar_{max} = \frac{\pi^2\omega^2 s}{2\theta^2_r} =$

$= \frac{\pi^2\times(104.76)^2\times 50}{2\times(\pi/2)^2}$ = 1097465.76mm/sec^2 = **1097.5m/sec^2**

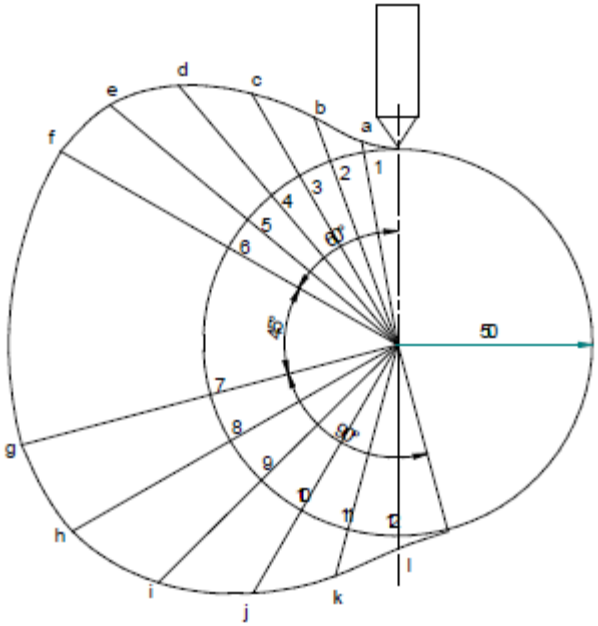

Draw the cam profile for following conditions:

Follower type = roller follower, in-line; lift = 25mm; base circle radius = 20mm; roller radius = 5mm; out stroke with UARM, for 120^0 cam rotation; dwell for 60^0 cam rotation; return stroke with UARM, for 90^0 cam rotation; dwell for the remaining period. Determine max. velocity and acceleration during out stroke and return stroke if the cam rotates at 1200 rpm in clockwise direction.

Displacement diagram:

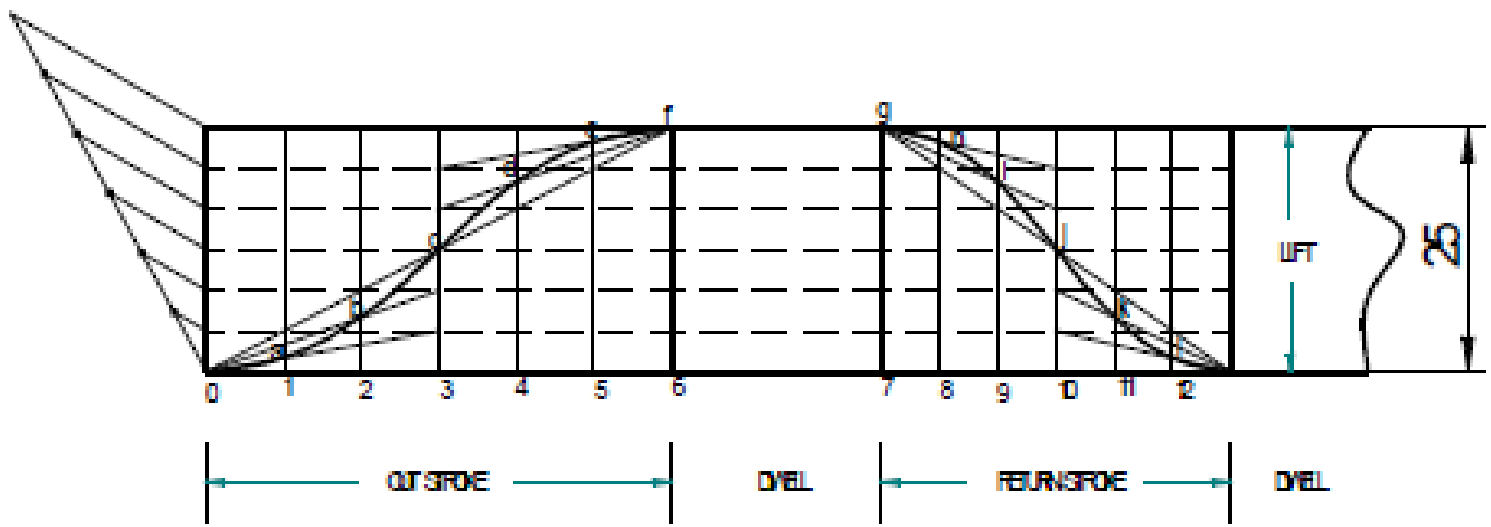

Thank you for your attention!

Questions, please!