Kinematics of Machines {ME44}

CHAPTER - I

Mechanics: It is that branch of scientific analysis which deals with motion, time and force.

Kinematics is the study of motion, without considering the forces which produce that motion. Kinematics of machines deals with the study of the relative motion of machine parts. It involves the study of position, displacement, velocity and acceleration of machine parts.

Dynamics of machines involves the study of forces acting on the machine parts and the motions resulting from these forces.

Plane motion: A body has plane motion, if all its points move in planes which are parallel to some reference plane. A body with plane motion will have only three degrees of freedom. I.e., linear along two axes parallel to the reference plane and rotational/angular about the axis perpendicular to the reference plane. (eg. linear along X and Z and rotational about Y.)The reference plane is called plane of motion. Plane motion can be of three types. 1) Translation 2) rotation and 3) combination of translation and rotation.

Translation: A body has translation if it moves so that all straight lines in the body move to parallel positions. Rectilinear translation is a motion wherein all points of the body move in straight lie paths. Eg. The slider in slider crank mechanism has rectilinear translation. (link 4 in fig.1.1)

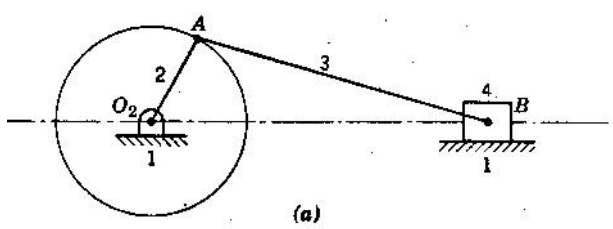

Fig.1.1

Translation, in which points in a body move along curved paths, is called curvilinear translation. The tie rod connecting the wheels of a steam locomotive has curvilinear translation. (link 3 in fig.1.2)

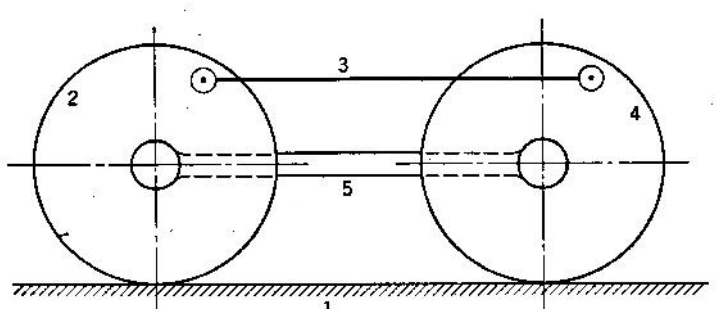

Fig.1.2

Rotation: In rotation, all points in a body remain at fixed distances from a line which is perpendicular to the plane of rotation. This line is the axis of rotation and points in the body describe circular paths about it. (Eg. link 2 in Fig.1.1 and links 2 & 4 in Fig.1.2)

Translation and rotation: It is the combination of both translation and rotation which is exhibited by many machine parts. (Eg. link 3 in Fig.1.1)

Link or element: It is the name given to any body which has motion relative to another. All materials have some elasticity. A rigid link is one, whose deformations are so small that they can be neglected in determining the motion parameters of the link.

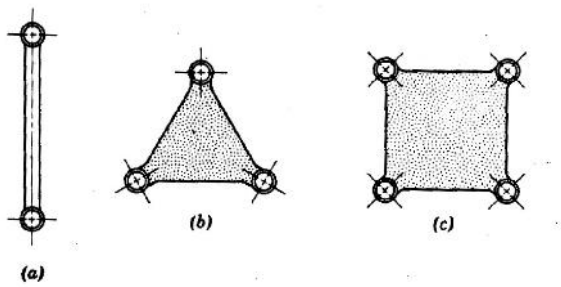

Fig.1.3

Binary link: Link which is connected to other links at two points. (Fig.1.3 a)

Ternary link: Link which is connected to other links at three points. (Fig.1.3 b)

Quaternary link: Link which is connected to other links at four points. (Fig1.3 c)

Pairing elements: the geometrical forms by which two members of a mechanism are joined together, so that the relative motion between these two is consistent are known as pairing elements and the pair so formed is called kinematic pair. Each individual link of a mechanism forms a pairing element.

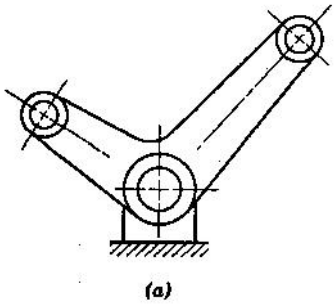

Fig.1.4 Kinematic pair

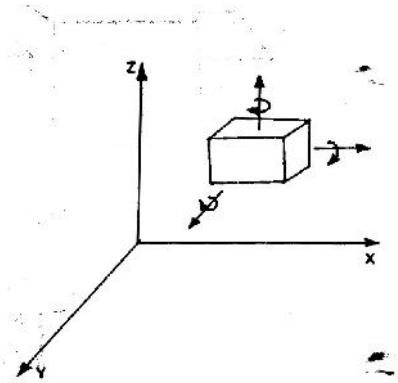

Fig.1.5

Degrees of freedom (DOF): It is the number of independent coordinates required to describe the position of a body in space. A free body in space (fig 1.5) can have six degrees of freedom. I.e., linear positions along x, y and z axes and rotational/angular positions with respect to x, y and z axes.

In a kinematic pair, depending on the constraints imposed on the motion, the links may loose some of the six degrees of freedom.

Types of kinematic pairs:

(i) Based on nature of contact between elements:

(a) Lower pair. If the joint by which two members are connected has surface contact, the pair is known as lower pair. Eg. pin joints, shaft rotating in bush, slider in slider crank mechanism.

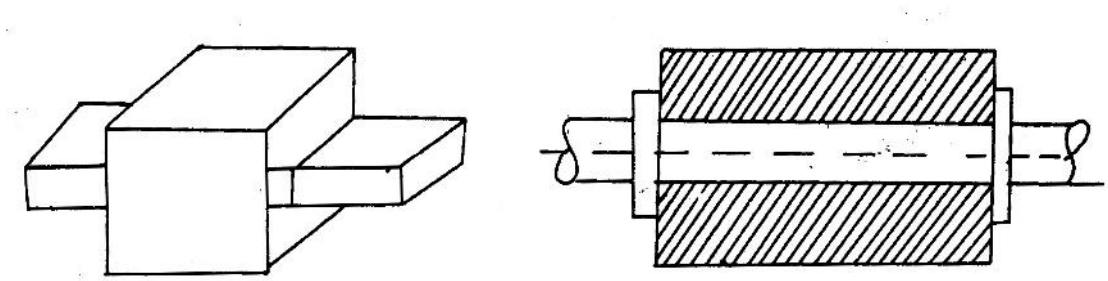

Fig.1.6 Lower pairs

(b) Higher pair. If the contact between the pairing elements takes place at a point or along a line, such as in a ball bearing or between two gear teeth in contact, it is known as a higher pair.

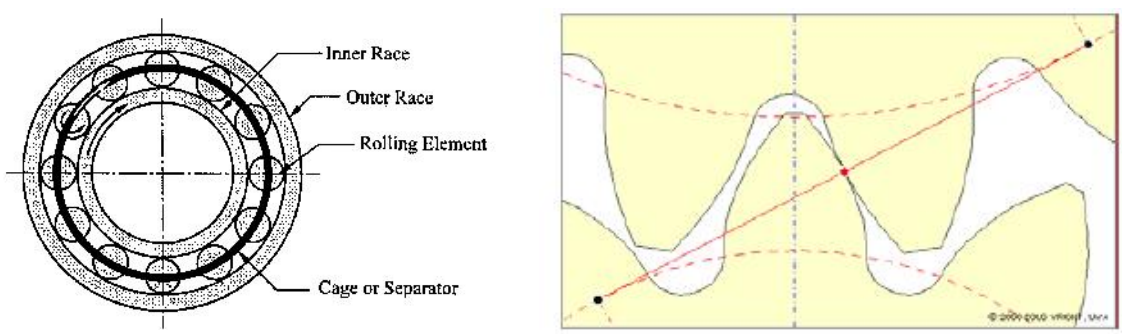

Fig.1.7 Higher pairs

(ii) Based on relative motion between pairing elements:

(a) Siding pair. Sliding pair is constituted by two elements so connected that one is constrained to have a sliding motion relative to the other. DOF = 1

(b) Turning pair (revolute pair). When connections of the two elements are such that only a constrained motion of rotation of one element with respect to the other is possible, the pair constitutes a turning pair. DOF = 1

(c) Cylindrical pair. If the relative motion between the pairing elements is the combination of turning and sliding, then it is called as cylindrical pair. DOF = 2

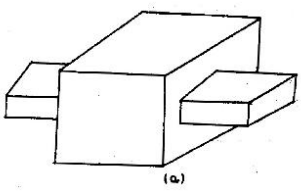

Fig.1.8 Sliding pair

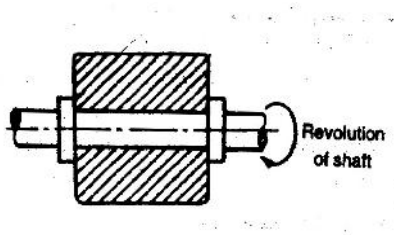

Fig.1.9 Turning pair

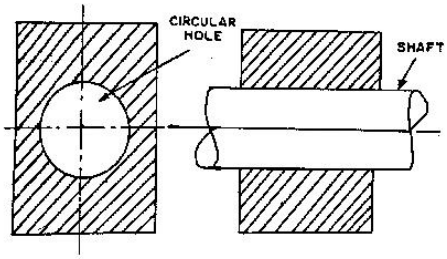

Fig.1.10 Cylindrical pair

(d) Rolling pair. When the pairing elements have rolling contact, the pair formed is called rolling pair. Eg. Bearings, Belt and pulley. DOF = 1

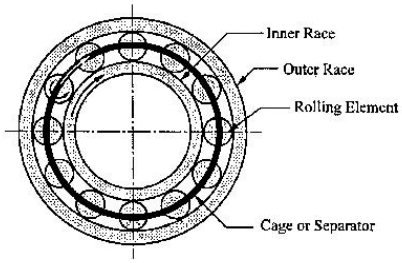

Fig.1.11 (a) Ball bearing

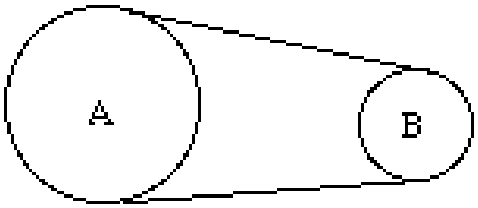

Fig.1.11(b) Belt and pulley

(e) Spherical pair. A spherical pair will have surface contact and three degrees of freedom. Eg. Ball and socket joint. DOF = 3

(f) Helical pair or screw pair. When the nature of contact between the elements of a pair is such that one element can turn about the other by screw threads, it is known as screw pair. Eg. Nut and bolt. DOF = 1

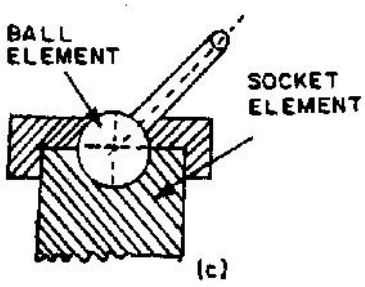

Fig.1.12 Ball and socket joint

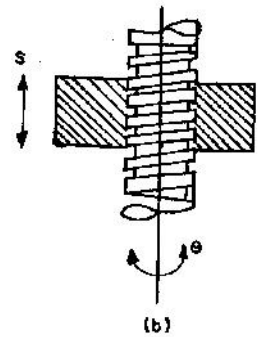

Fig.1.13 Screw pair

(iii) Based on the nature of mechanical constraint.

(a) Closed pair. Elements of pairs held together mechanically due to their geometry constitute a closed pair. They are also called form-closed or self-closed pair.

(b) Unclosed or force closed pair. Elements of pairs held together by the action of external forces constitute unclosed or force closed pair .Eg. Cam and follower.

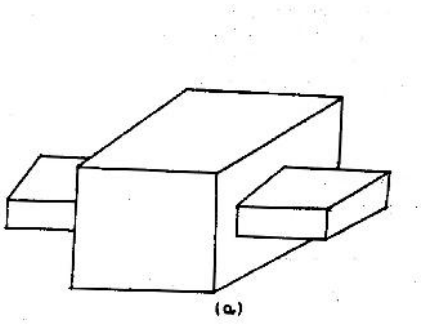

Fig.1.14 Closed pair

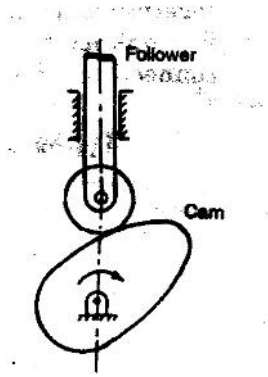

Fig. 1.15 Force closed pair (cam & follower)

Constrained motion: In a kinematic pair, if one element has got only one definite motion relative to the other, then the motion is called constrained motion.

(a) Completely constrained motion. If the constrained motion is achieved by the pairing elements themselves, then it is called completely constrained motion.

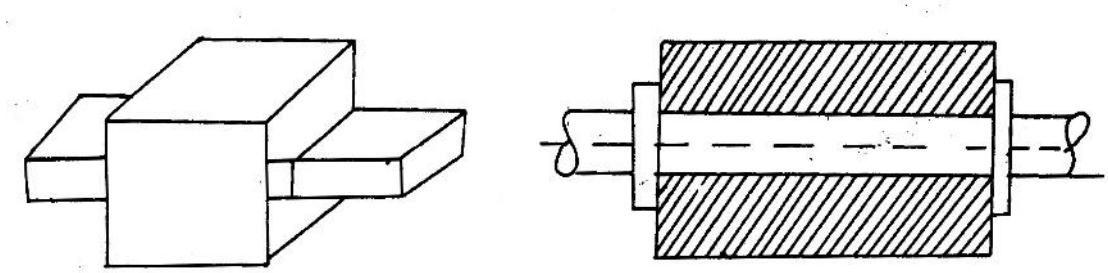

Fig.1.16 Completely constrained motion

(b) Successfully constrained motion. If constrained motion is not achieved by the pairing elements themselves, but by some other means, then, it is called successfully constrained motion. Eg. Foot step bearing, where shaft is constrained from moving upwards, by its self weight.

(c) Incompletely constrained motion. When relative motion between pairing elements takes place in more than one direction, it is called incompletely constrained motion. Eg. Shaft in a circular hole.

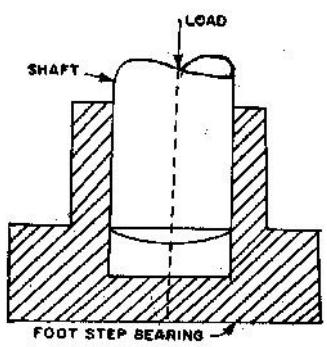

Fig.1.17 Foot strep bearing

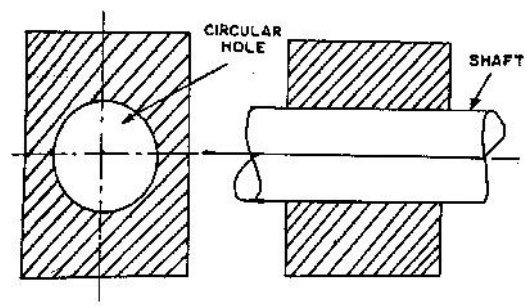

Fig.1.18 Incompletely constrained motion

Kinematic chain: A kinematic chain is a group of links either joined together or arranged in a manner that permits them to move relative to one another. If the links are connected in such a way that no motion is possible, it results in a locked chain or structure.

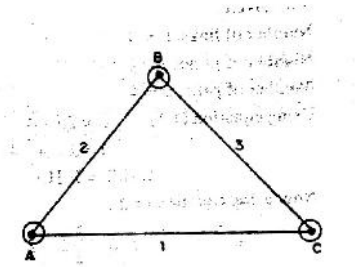

Fig.1.19 Locked chain or structure

Mechanism: A mechanism is a constrained kinematic chain. This means that the motion of any one link in the kinematic chain will give a definite and predictable motion relative to each of the others. Usually one of the links of the kinematic chain is fixed in a mechanism.

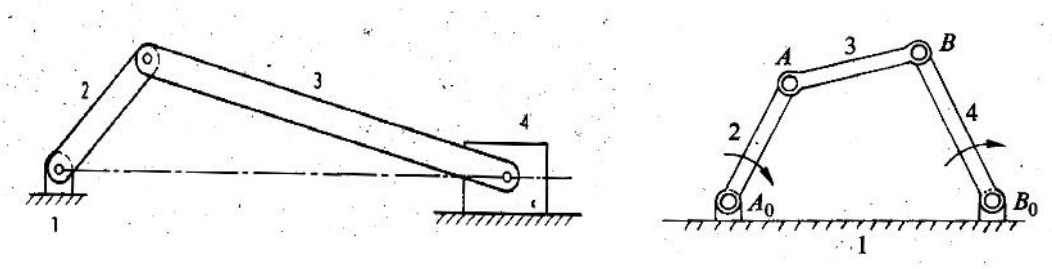

Fig.1.20 Slider crank and four bar mechanisms.

If, for a particular position of a link of the chain, the positions of each of the other links of the chain can not be predicted, then it is called as unconstrained kinematic chain and it is not mechanism.

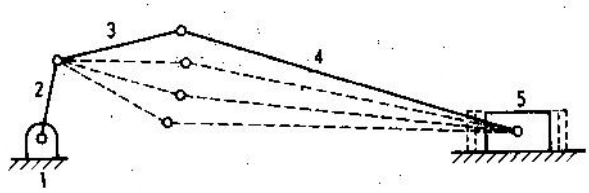

Fig.1.21 Unconstrained kinematic chain

Machine: A machine is a mechanism or collection of mechanisms, which transmit force from the source of power to the resistance to be overcome. Though all machines are mechanisms, all mechanisms are not machines. Many instruments are mechanisms but are not machines, because they do no useful work nor do they transform energy. Eg. Mechanical clock, drafter.

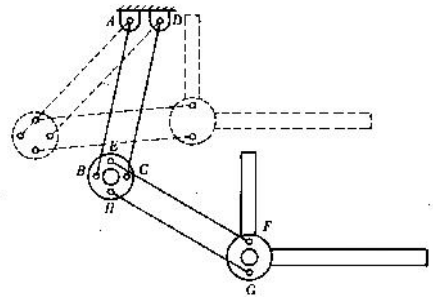

Fig.1.21 Drafter

Planar mechanisms: When all the links of a mechanism have plane motion, it is called as a planar mechanism. All the links in a planar mechanism move in planes parallel to the reference plane.

Degrees of freedom/mobility of a mechanism: It is the number of inputs (number of independent coordinates) required to describe the configuration or position of all the links of the mechanism, with respect to the fixed link at any given instant.

Grubler's equation: Number of degrees of freedom of a mechanism is given by

$$F = 3(n-1)-2l-h. \text{ Where,}$$

F = Degrees of freedom

n = Number of links = $n_2 + n_3 + \ldots\ldots + n_j$, where, n_2 = number of binary links, n_3 = number of ternary links…etc.

l = Number of lower pairs, which is obtained by counting the number of joints. If more than two links are joined together at any point, then, one additional lower pair is to be considered for every additional link.

h = Number of higher pairs

Examples of determination of degrees of freedom of planar mechanisms:

(i)

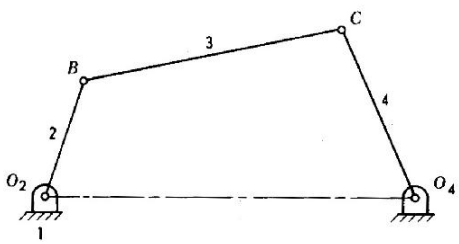

F = 3(n-1)-2l-h

Here, n_2 = 4, n = 4, l = 4 and h = 0.

F = 3(4-1)-2(4) = 1

I.e., one input to any one link will result in definite motion of all the links.

(ii)

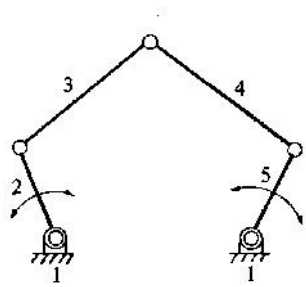

F = 3(n-1)-2l-h

Here, n_2 = 5, n = 5, l = 5 and h = 0.

F = 3(5-1)-2(5) = 2

I.e., two inputs to any two links are required to yield definite motions in all the links.

(iii)

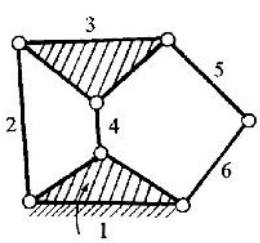

F = 3(n-1)-2l-h

Here, n_2 = 4, n_3 =2, n = 6, l = 7 and h = 0.

F = 3(6-1)-2(7) = 1

I.e., one input to any one link will result in definite motion of all the links.

(iv)

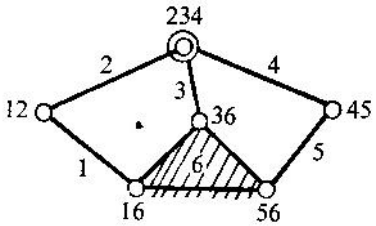

F = 3(n-1)-2l-h
Here, n_2 = 5, n_3 =1, n = 6, l = 7 (at the intersection of 2, 3 and 4, two lower pairs are to be considered) and h = 0.
F = 3(6-1)-2(7) = 1

(v)

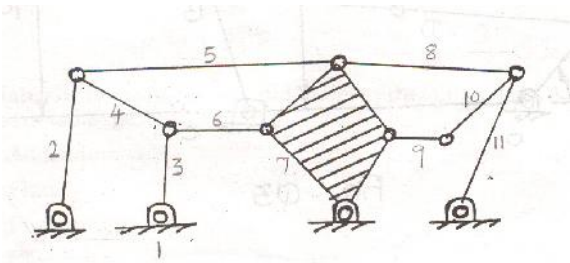

F = 3(n-1)-2l-h
Here, n = 11, l = 15 (two lower pairs at the intersection of <u>3, 4, 6</u>; <u>2, 4, 5</u>; <u>5, 7, 8</u>; <u>8, 10, 11</u>) and h = 0.
F = 3(11-1)-2(15) = 0

(vi) Determine the mobility of the following mechanisms.

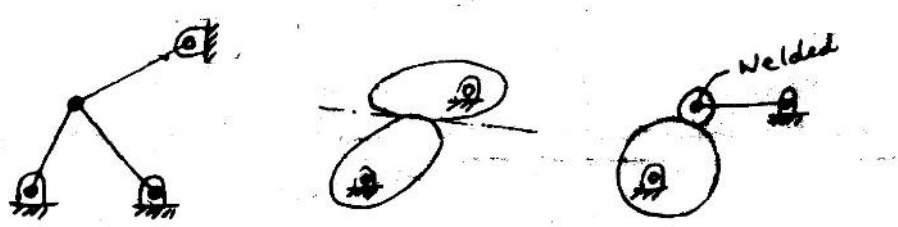

(a) (b) (c)

(a)	(b)	(c)
F = 3(n-1)-2l-h	F = 3(n-1)-2l-h	F = 3(n-1)-2l-h
Here, n = 4, l = 5 and h = 0.	Here, n = 3, l = 2 and h = 1.	Here, n = 3, l = 2 and h = 1.
F = 3(4-1)-2(5) = -1	F = 3(3-1)-2(2)-1 = 1	F = 3(3-1)-2(2)-1 = 1
I.e., it is a structure		

Inversions of mechanism: A mechanism is one in which one of the links of a kinematic chain is fixed. Different mechanisms can be obtained by fixing different links of the same kinematic chain. These are called as inversions of the mechanism. By changing the fixed link, the number of mechanisms which can be obtained is equal to the number of links. Excepting the original mechanism, all other mechanisms will be known as inversions of original mechanism. The inversion of a mechanism does not change the motion of its links relative to each other.

Four bar chain:

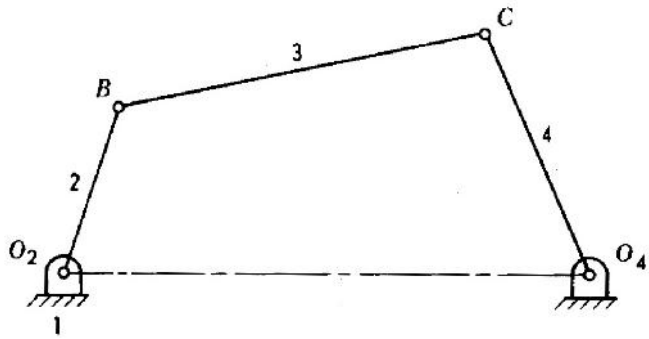

Fig 1.22 Four bar chain

One of the most useful and most common mechanisms is the four-bar linkage. In this mechanism, the link which can make complete rotation is known as crank (link 2). The link which oscillates is known as rocker or lever (link 4). And the link connecting these two is known as coupler (link 3). Link 1 is the frame.

Inversions of four bar chain:

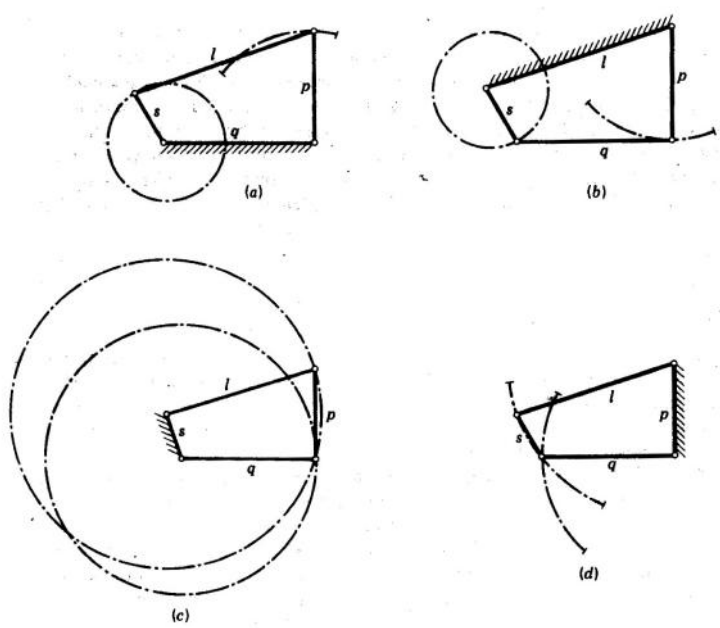

Fig.1.23 Inversions of four bar chain.

Crank-rocker mechanism: In this mechanism, either link 1 or link 3 is fixed. Link 2 (crank) rotates completely and link 4 (rocker) oscillates. It is similar to (a) or (b) of fig.1.23.

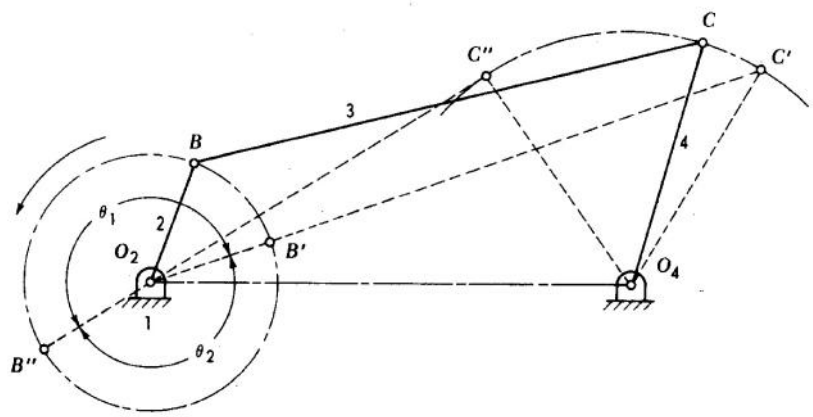

Fig.1.24

Drag link mechanism. Here link 2 is fixed and both links 1 and 4 make complete rotation but with different velocities. This is similar to 1.23(c).

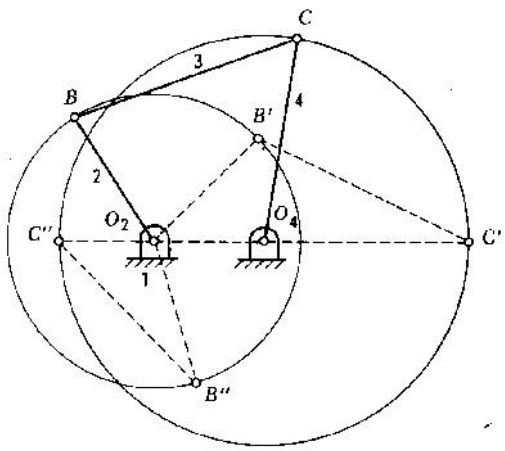

Fig.1.25

Double crank mechanism. This is one type of drag link mechanism, where, links 1& 3 are equal and parallel and links 2 & 4 are equal and parallel.

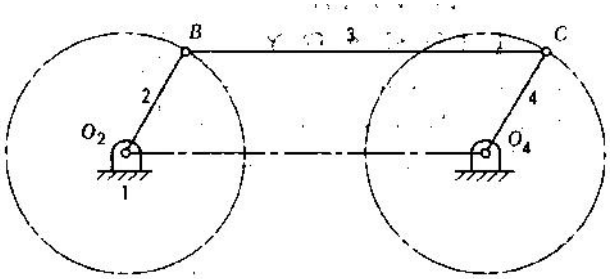

Fig.1.26

Double rocker mechanism. In this mechanism, link 4 is fixed. Link 2 makes complete rotation, whereas links 3 & 4 oscillate (Fig.1.23d)

Slider crank chain: This is a kinematic chain having four links. It has one sliding pair and three turning pairs. Link 2 has rotary motion and is called crank. Link 3 has got combined rotary and reciprocating motion and is called connecting rod. Link 4 has reciprocating motion and is called slider. Link 1 is frame (fixed). This mechanism is used to convert rotary motion to reciprocating and vice versa.

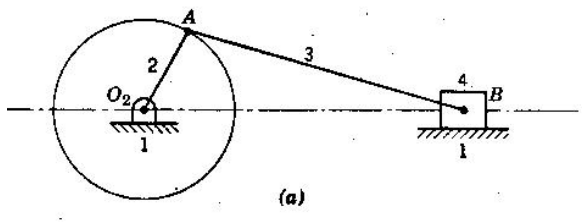

Fig1.27

Inversions of slider crank chain: Inversions of slider crank mechanism is obtained by fixing links 2, 3 and 4.

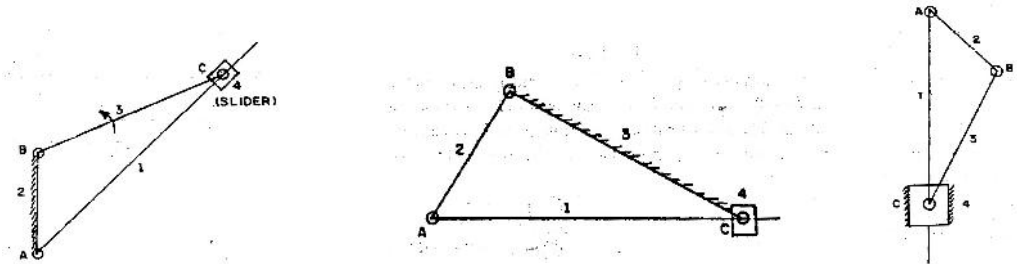

(a) crank fixed (b) connecting rod fixed (c) slider fixed

Fig.1.28

Rotary engine – I inversion of slider crank mechanism. (crank fixed)

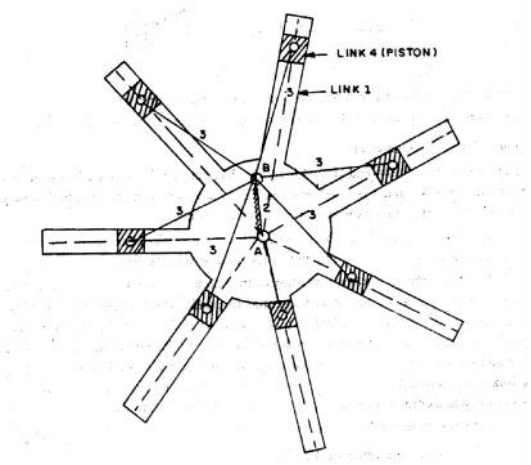

Fig.1.29

Whitworth quick return motion mechanism–I inversion of slider crank mechanism.

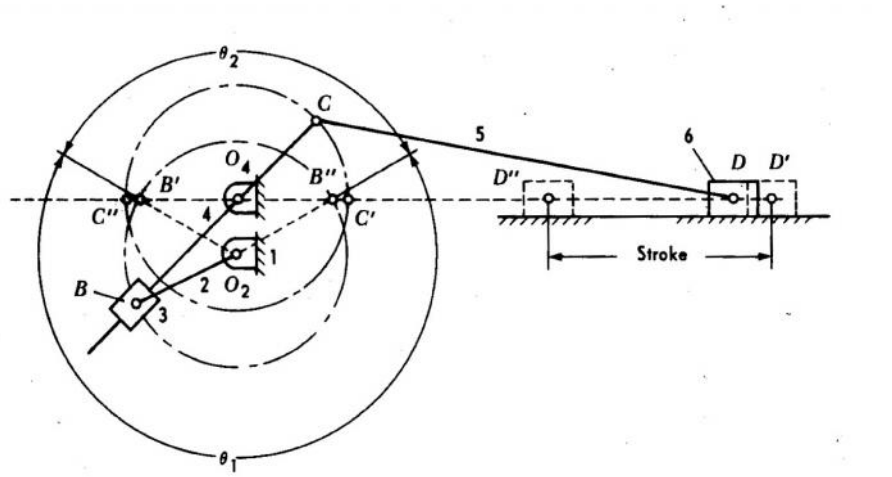

Fig.1.30

Crank and slotted lever quick return motion mechanism – II inversion of slider crank mechanism (connecting rod fixed).

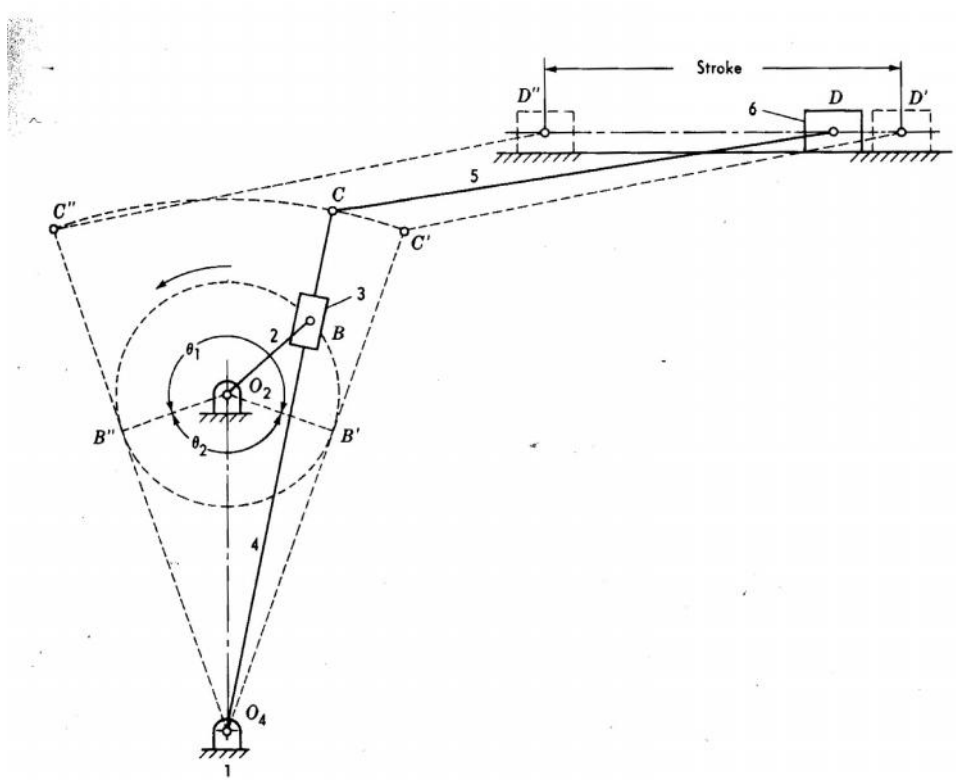

Fig.1.31

Oscillating cylinder engine–II inversion of slider crank mechanism (connecting rod fixed).

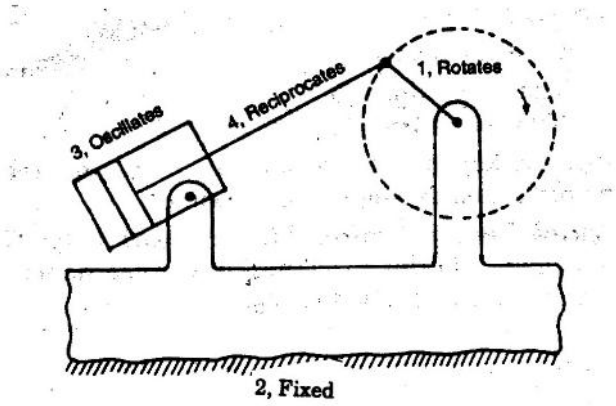

Fig.1.32

Pendulum pump or bull engine–III inversion of slider crank mechanism (slider fixed).

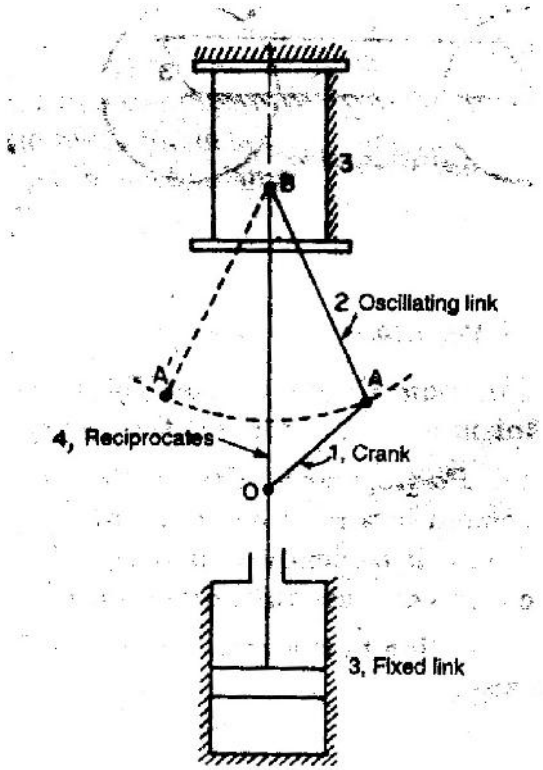

Fig.1.33

Double slider crank chain: It is a kinematic chain consisting of two turning pairs and two sliding pairs.

Scotch –Yoke mechanism.

Turning pairs – 1&2, 2&3; Sliding pairs – 3&4, 4&1.

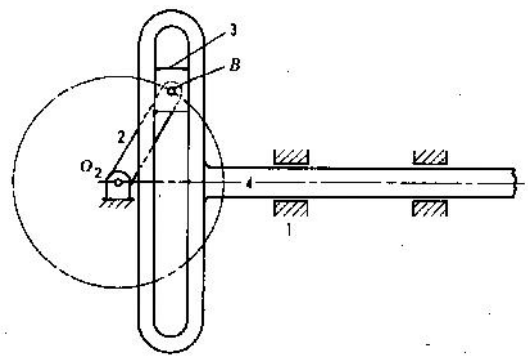

Fig.1.34

Inversions of double slider crank mechanism:

Elliptical trammel. This is a device which is used for generating an elliptical profile.

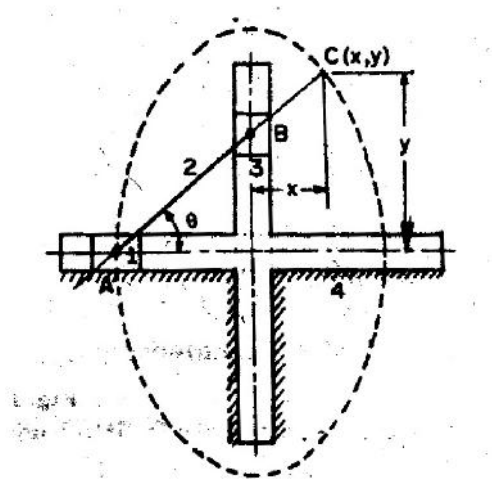

Fig.1.35

In fig. 1.35, if AC = p and BC = q, then, x = q.cosθ and y = p.sinθ.

Rearranging, $\left(\frac{x}{q}\right)^2 + \left(\frac{y}{p}\right)^2 = \cos^{2-} + \sin^{2-} = 1$. This is the equation of an ellipse. The path traced by point C is an ellipse, with major axis and minor axis equal to 2p and 2q respectively.

Oldham coupling. This is an inversion of double slider crank mechanism, which is used to connect two parallel shafts, whose axes are offset by a small amount.

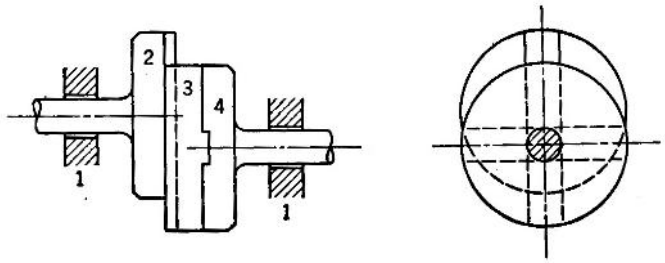

Fig.1.36

References:

1. **Theory of Machines and Mechanisms** by Joseph Edward Shigley and John Joseph Uicker,Jr. *McGraw-Hill International Editions*.
2. **Kinematics and Dynamics of Machines** by George H.Martin. *McGraw-Hill Publications.*
3. **Mechanisms and Dynamics of Machinery** by Hamilton H. Mabie and Fred W. Ocvirk. *John Wiley and Sons*.
4. **Theory of Machines** by V.P.Singh. *Dhanpat Rai and Co*.
5. **The Theory of Machines through solved problems** by J.S.Rao. *New age international publishers.*
6. **A text book of Theory of Machines** by Dr.R.K.Bansal. *Laxmi Publications (P) Ltd*.