Dynamics of Machinery

Credits: 3

Lecturer: Abbasi

The velocity of each tooth on A and B are the same
so: $\omega_A t_A = \omega_B t_B$ *-as they are simple gears.*
Likewise for C and D, $\omega_C t_C = \omega_D t_D$.

$$\frac{\omega_A}{t_B} = \frac{\omega_B}{t_A} \quad \text{and} \quad \frac{\omega_C}{t_D} = \frac{\omega_D}{t_C}$$

$$\omega_A = \frac{t_B \times \omega_B}{t_A} \quad \text{and} \quad \omega_C = \frac{t_D \times \omega_D}{T_C}$$

$$\omega_A \times \omega_C = \frac{t_B \times \omega_B}{t_A} \times \frac{t_D \times \omega_D}{t_C}$$

$$\frac{\omega_A \times \omega_C}{\omega_B \times \omega_D} = \frac{t_B}{t_A} \times \frac{t_D}{t_C}$$

Since gear B and C are on the same shaft

$$\omega_B = \omega_C$$

$$\frac{\omega_A}{\omega_D} = \frac{t_B}{t_A} \times \frac{t_D}{t_C} = GR$$

Since $\omega = 2 \times \pi \times N$

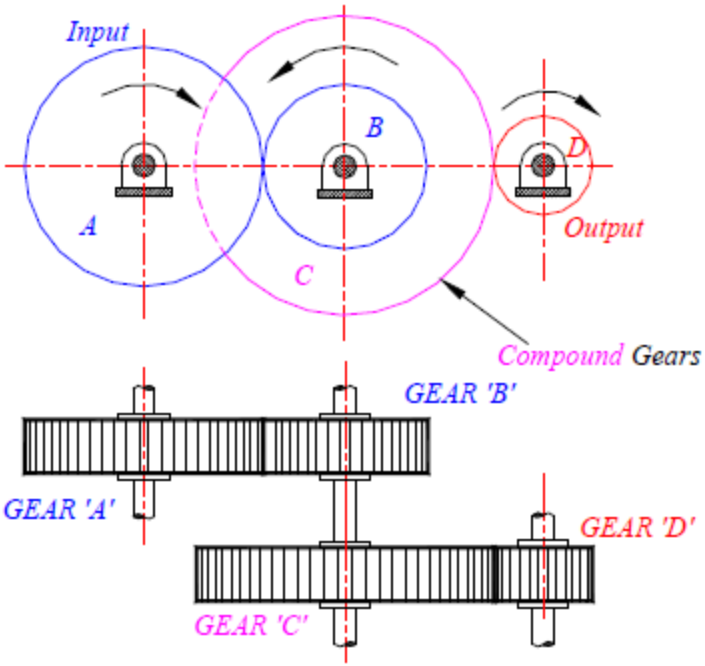

$$\frac{N(In)}{N(Out)} = \frac{t_B}{t_A} \times \frac{t_D}{t_C} = GR$$

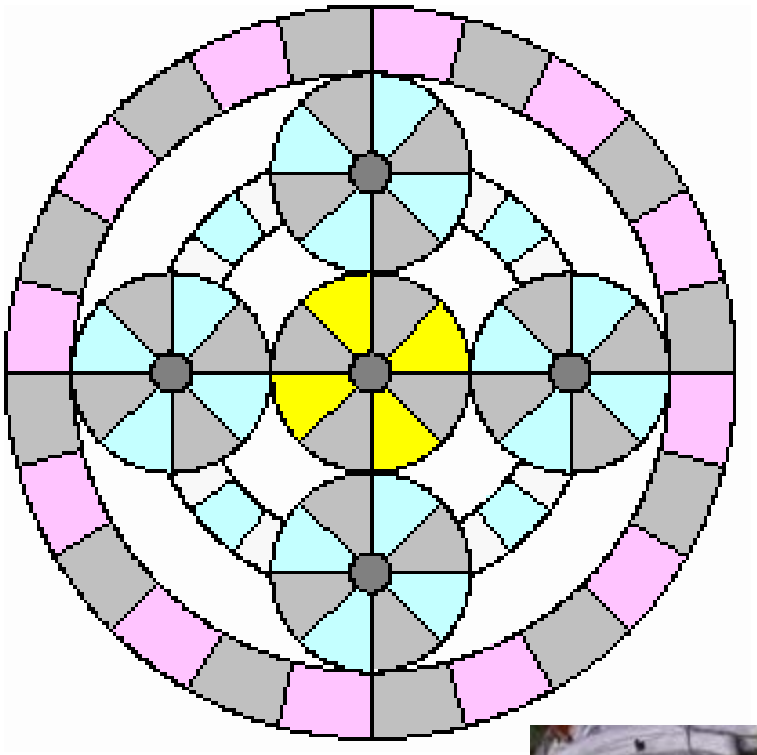

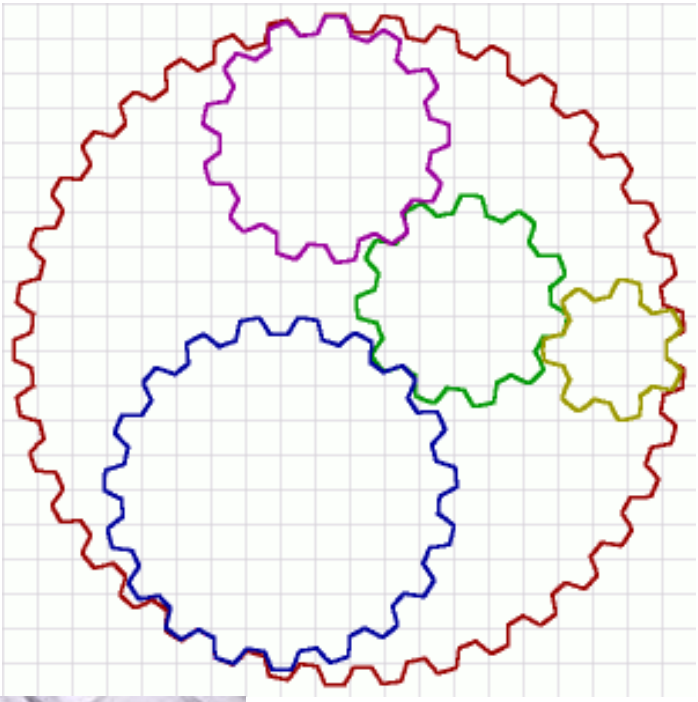

Suppose gear *C* is fixed and the arm *A* makes one revolution. Determine how many revolutions the planet gear *B* makes.

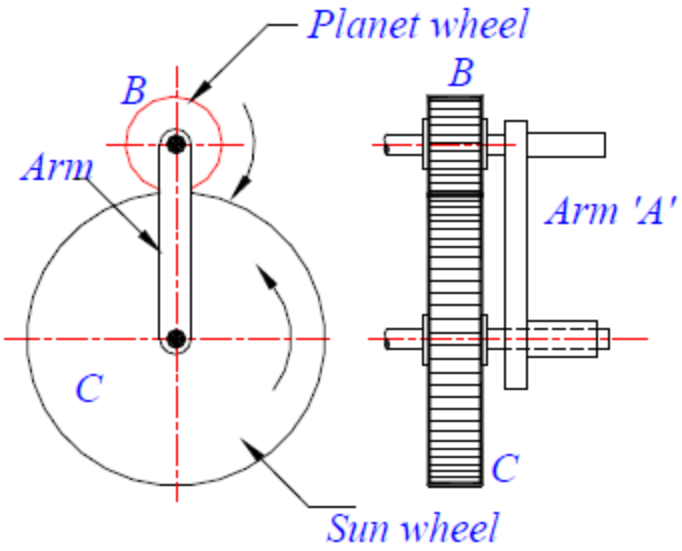

Step	Action	A	B	C
1	Revolve all once	1	1	1
2	Revolve *C* by –1 revolution, keeping the arm fixed	0	$+\frac{t_C}{t_B}$	-1
3	Add	1	$1+\frac{t_C}{t_B}$	0

A simple epicyclic gear has a fixed sun gear with 100 teeth and a planet gear with 50 teeth. If the arm is revolved once, how many times does the planet gear revolve?

Step	***Action***	***A***	***B***	***C***
1	Revolve all once	1	1	1
2	Revolve C by –1 revolution, keeping the arm fixed	0	$+\frac{100}{50}$	-1
3	Add	**1**	**3**	**0**

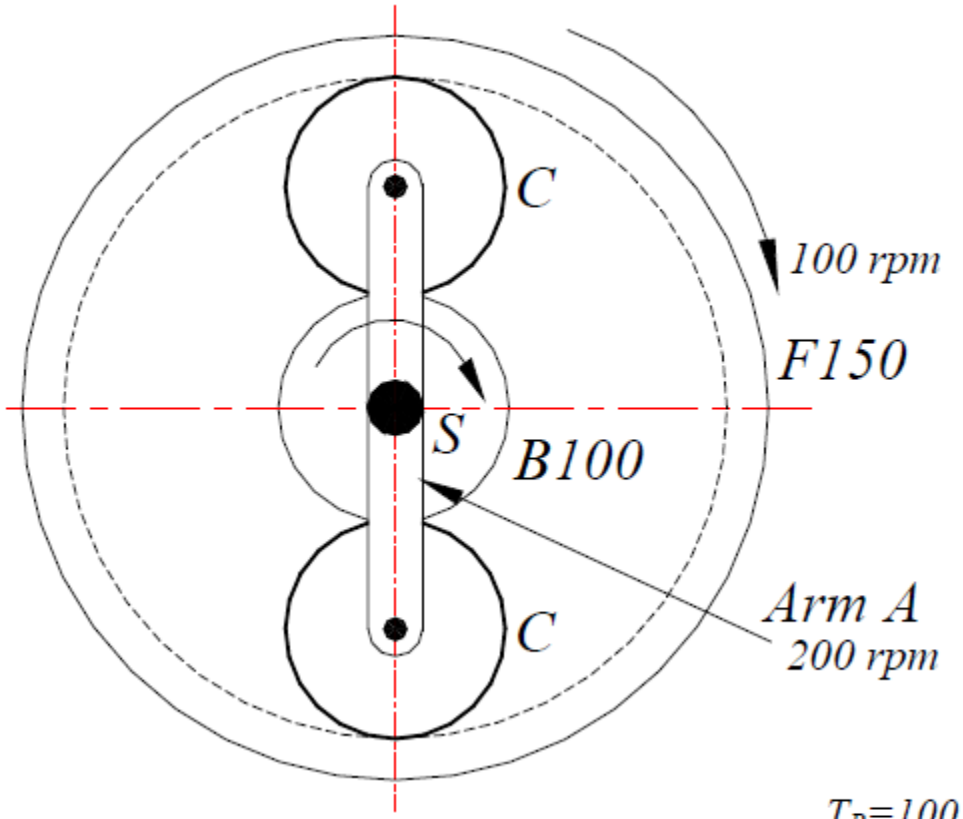

In this figure, the arm A is fixed to the shaft S. The wheel B having 100 teeth rotates freely on the shaft S. The wheel F having 150 teeth driven separately. If the arm rotates at 200 rpm and wheel F at 100 rpm in the same direction; find (a) number of teeth on the gear C
and (b) speed of wheel B.

$T_B=100;\quad T_F=150;\quad N_A=200rpm;\quad N_F=100rpm$

$$r_F = r_B + 2r_C$$
$$T_F = T_B + 2T_C$$
$$150 = 100 + 2 \times T_C$$
$$T_C = 25 \rightarrow \text{Number of teeth on gears } C$$

$$\therefore \text{Train value} = -\frac{T_B}{T_F}$$

$$\text{also} \quad TV = \frac{N_L - N_{Arm}}{N_F - N_{Arm}} = \frac{N_F - N_A}{N_B - N_A}$$

$$\therefore \quad -\frac{T_B}{T_F} = \frac{N_F - N_A}{N_B - N_A}$$

$$-\frac{100}{150} = \frac{100 - 200}{N_B - 200} \quad \Rightarrow \quad N_E = 350$$

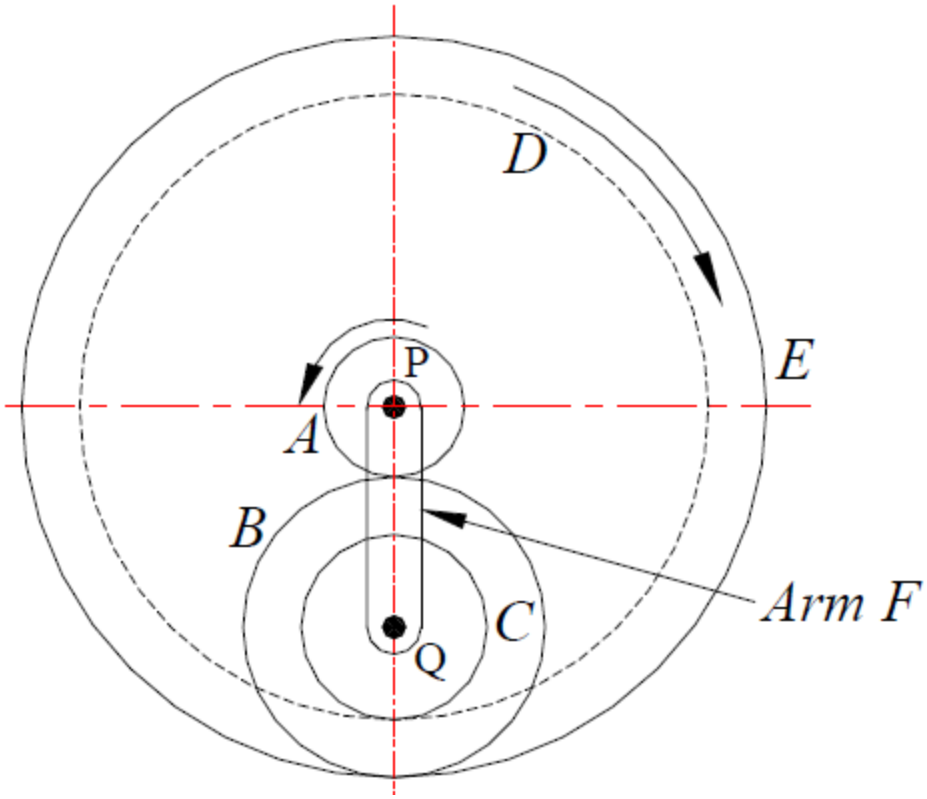

In a compound epicyclic gear train as shown in the figure, has gears A and an annular gears D & E free to rotate on the axis P. B and C is a compound gear rotate about axis Q. Gear A rotates at 90 rpm CCW and gear D rotates at 450 rpm CW. Find the speed and direction of rotation of arm F and gear E. Gears A,B and C are having 18, 45 and 21 teeth respectively. All gears having same module and pitch.

$T_A=18$; $T_B=45$; $T_C=21$;

$N_A = -90rpm$; $N_D=450rpm$

$$\therefore Train\ \ value = -\frac{T_A}{T_B}\times\frac{T_C}{T_D}$$

$$also \quad TV = \frac{N_L - N_{Arm}}{N_F - N_{Arm}} = \frac{N_D - N_F}{N_A - N_F}$$

$$\therefore \quad -\frac{T_A}{T_B}\times\frac{T_C}{T_D} = \frac{N_D - N_F}{N_A - N_F}$$

$$-\frac{18\times 21}{45\times 84} = \frac{450 - N_F}{-90 - N_F}$$

$$\Rightarrow \quad N_F = Speed\ \ of\ \ Arm = 400.9\,rpm - CW$$

$$r_D = r_A + r_B + r_C$$

$$T_D = T_A + T_B + T_C$$

$$T_D = 18 + 45 + 21 = 84\ \ teeth\ \ on\ \ gear\ \ D$$

$$r_E = r_A + 2r_B$$
$$T_E = T_A + 2T_B$$
$$T_E = 18 + 2 \times 45$$
$$T_E = 108 \rightarrow Number\ of\ teeth\ on\ gear\ E$$

Gears A and E rotates in the opposite directions:

$$\therefore Train\ value = -\frac{T_A}{T_E}$$

$$also \quad TV = \frac{N_E - N_F}{N_A - N_F}$$

$$\therefore \quad -\frac{T_A}{T_E} = \frac{N_E - N_F}{N_A - N_F}$$

$$-\frac{18}{108} = \frac{N_E - 400.9}{-90 - 400.9}$$

$$\Rightarrow \quad N_E = Speed\ of\ gear\ E = 482.72\,rpm - CW$$

In this epicyclic gear of sun and planet type, the pitch circle diameter of the annular wheel *A* is to be nearly 216mm and module 4mm. When the annular ring is stationary, the spider that carries three planet wheels *P* of equal size to make *one revolution* for every *five revolution* of the driving spindle carrying the sun wheel.

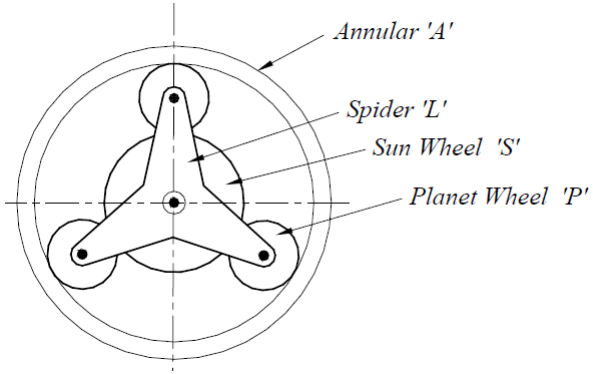

Determine the number of teeth for all the wheels and the exact pitch circle diameter of the annular wheel.

$$T_A = T_S + 2T_P$$

$$T_A = \frac{PCD\ of\ A}{m} = \frac{216}{4} = 54\,teeth$$

Operation	***Spider arm L***	Sun Wheel S T_S	Planet wheel P T_P	Annular wheel A $T_A = 54$
Arm L is fixed & Sun wheel *S* is given +1 revolution	0	+1	$-\frac{T_S}{T_P}$	$-\frac{T_S}{T_P}\times\frac{T_P}{T_A} = -\frac{T_S}{T_A}$
Multiply by *m* (*S* rotates through *m* revolution)	*0*	*m*	$-\frac{T_S}{T_P}m$	$-\frac{T_S}{T_A}m$
Add *n* revolutions to all elements	*n*	*m+n*	$n-\frac{T_S}{T_P}m$	$n-\frac{T_S}{T_A}m$

If L rotates +1 revolution: $\therefore \quad n = 1 \qquad (1)$

The sun wheel S to rotate +5 revolutions correspondingly:

$$\therefore \quad n + m = 5 \qquad (2)$$

From (1) and (2) $\quad m = 4$

When A is fixed:

$$n - \frac{T_S}{T_A} m = 0 \qquad \Rightarrow \qquad T_A = 4T_S$$

$$\therefore \quad T_S = \frac{54}{4} = 13.5\,teeth$$

Trial 1: Let $T_A = 52$ and $T_S = 13$

$$\therefore \quad T_P = \frac{T_A - T_S}{2} = \frac{52-13}{4} = 19.5\,teeth$$ - ***This is impracticable***

Trial 2: Let $T_A = 56$ and $T_S = 14$

$$\therefore \quad T_P = \frac{T_A - T_S}{2} = \frac{56-14}{4} = 21\,teeth$$ - ***This is practicable***

$\therefore$ $\boldsymbol{T_A = 56}$, $\boldsymbol{T_S = 14}$ **and** $\boldsymbol{T_P = 21}$ PCD of $A = 56 \times 4 = 224$ mm

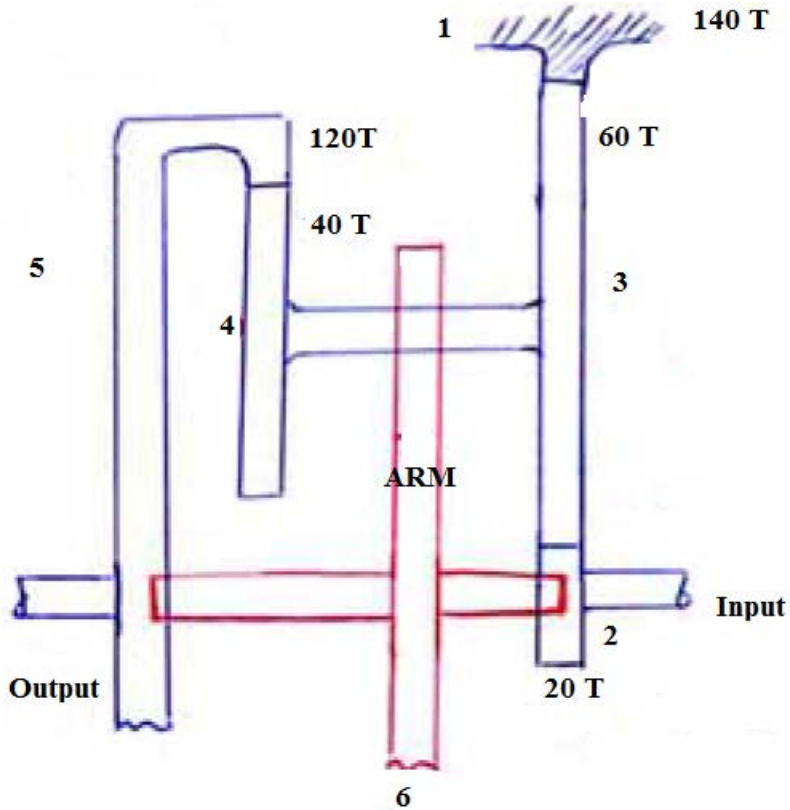

Velocity ratio or Train value?

	1	2	3	4	5	6
All (Cw)	1	1	1	1	1	1
Fixed Arm	-1	140/60x60/20	-140/60	-140/60	-140/60x40/120	0
Total	0	8	-4/3	-4/3	2/9	1

$VR = \omega 5 / \omega 2 = 1/36$

In the gear train shown, the wheel C is fixed, the gear B, is keyed to the input shaft and the gear F is keyed to the output shaft. The arm A, carrying the compound wheels D and E turns freely on the out put shaft. If the input speed is 1000 rpm (ccw) when seen from the right, determine the speed of the output shaft. The number of teeth on each gear is indicated in the figures. Find the output torque to keep the wheel C fixed if the input power is 7.5 kW.

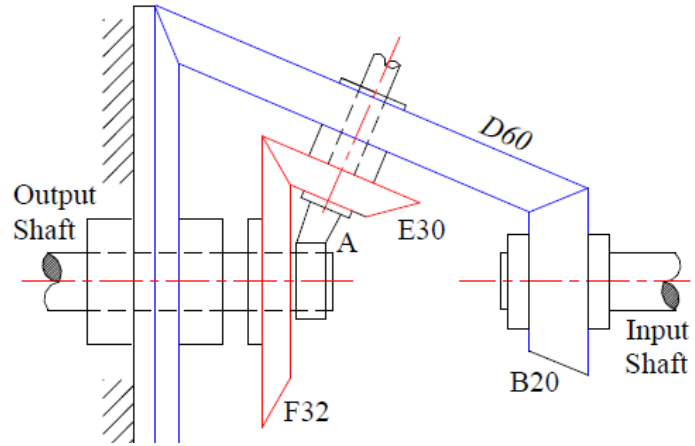

$t_B = 20;\ t_C = 80;\ t_D = 60;\ t_E = 30;\ t_F = 32;\ N_B = 1000$ rpm (ccw) (input speed); $P = 7.5$ kW

Operation	Arm	B (20) Input	Compound Gear wheel		C (80)	F (32)
			D (60)	E (30)		
Arm is fixed & B is given +1 revolution	0	+1	$\frac{20}{60} = \frac{1}{3}$	$\frac{1}{3}$	$\frac{1}{3} \times -\frac{60}{80} = -\frac{1}{4}$	$\frac{1}{3} \times -\frac{30}{32} -\frac{5}{16}$
Multiply by m (B rotates through m revolution)	0	m	$\frac{1}{3}m$	$\frac{1}{3}m$	$-\frac{1}{4}m$	$-\frac{5}{16}m$
Add n revolutions to all elements	n	$m+n$	$\frac{1}{3}m+n$	$\frac{1}{3}m+n$	$n-\frac{1}{4}m$	$n-\frac{5}{16}m$

Gears $S1$ and $S2$ being rigidly attached to the shaft Q. If the shaft P rotates at 1000 rpm clockwise, while the annular $A2$ is driven in counter clockwise direction at 500 rpm, determine the speed and direction of rotation shaft Q. The number of teeth in the wheels are $S1 = 24$; $S2 = 40$; $A1 = 100$; $A2 = 120$.

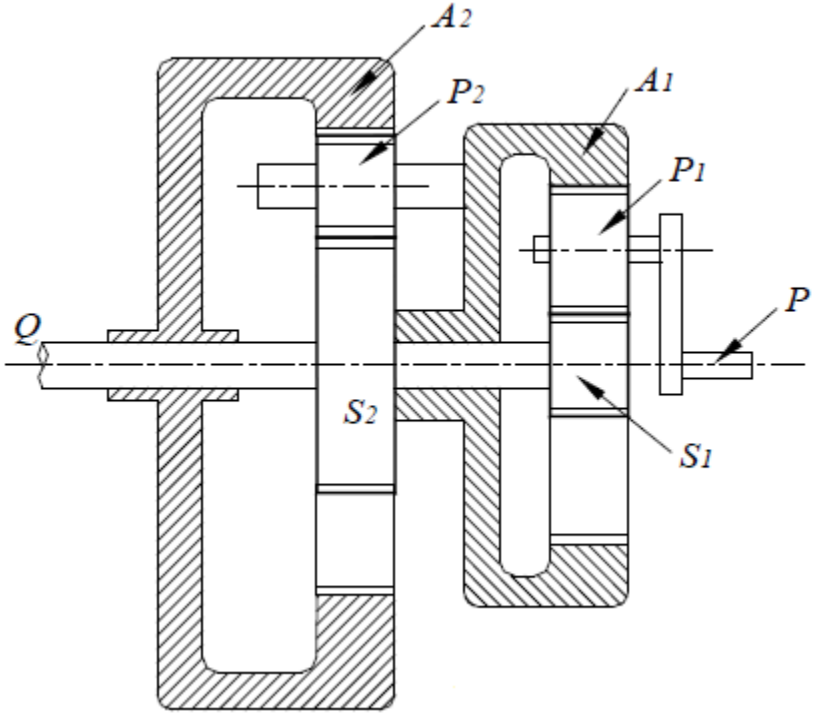

The drive is from gear wheels *A* and *B* to the bevel gear wheel *D* through the gear train.
A=72, B=72, C=60,
D=30, E=28, F=24

How many revolutions does D makes for one revolution of A under the following situations:

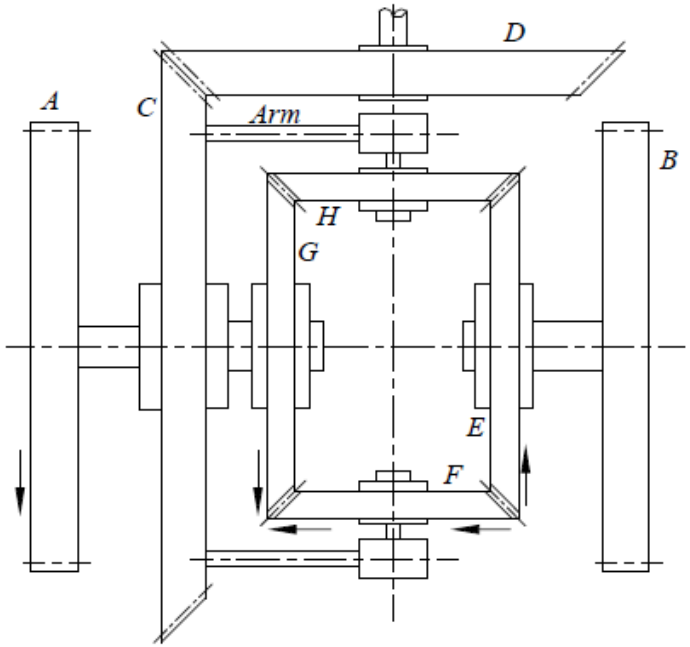

a. If *A* and *B* are having the same speed and same direction
b. If *A* and *B* are having the same speed and opposite direction
c. If *A* is making 72 rpm and *B* is at rest
d. If *A* is making 72 rpm and *B* 36 rpm in the same direction