Dynamics of Machinery

Credits: 3

Lecturer: Abbasi

Follower type = roller follower, in-line; lift = 25mm; base circle radius = 20mm; roller radius = 5mm; out stroke with UARM, for 120° cam rotation; dwell for 60° cam rotation; return stroke with UARM, for 90° cam rotation; dwell for the remaining period.

- Draw the cam profile for these conditions
- Determine max. velocity and acceleration during out stroke and return stroke if the cam rotates at 1200 rpm in clockwise direction.

UARM : Uniform acceleration and retardation

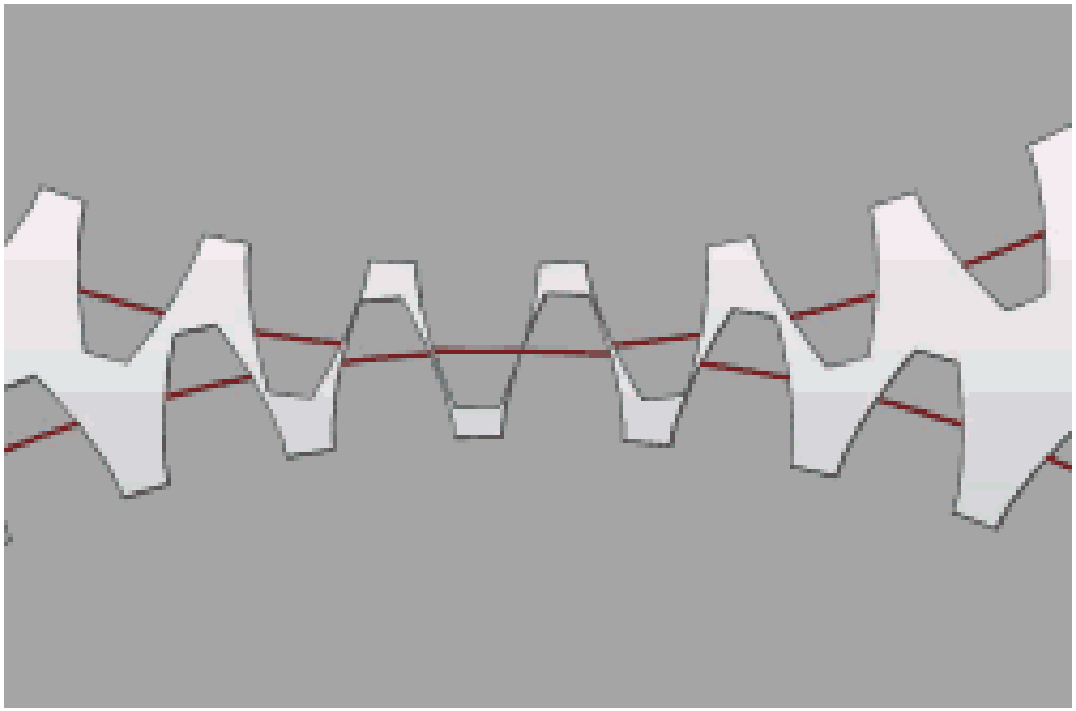

- Spur gears generally cannot be used when a direction change between the two shafts is required.
- Spur gears are easy to find, inexpensive, and efficient.

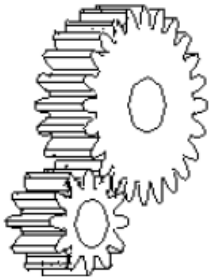

External contact

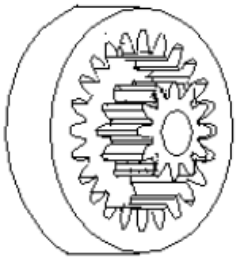

Iinternal contact

− Tooth strength is greater because the teeth are longer,
- Greater surface contact on the teeth allows a helical gear to carry more load than a spur gear
- The longer surface of contact reduces the efficiency of a helical gear relative to a spur gear

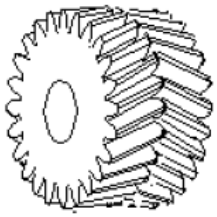

Spiral bevel gears

Face: The working surface of a gear tooth, located between the pitch diameter and the top of the tooth.
Face Width: The width of the tooth measured parallel to the gear axis.
Flank: The working surface of a gear tooth, located between the pitch diameter and the bottom of the teeth
Gear: The larger of two meshed gears. If both gears are the same size, they are both called "gears".
Land: The top surface of the tooth.
Line of Action: That line along which the point of contact between gear teeth travels, between the first point of contact and the last.
Module: Millimeter of Pitch Diameter to Teeth.

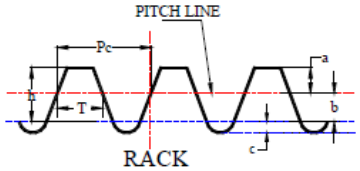

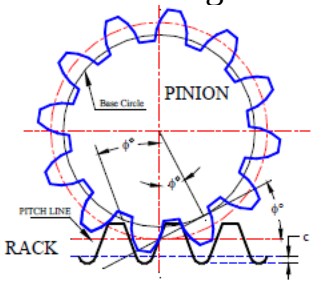

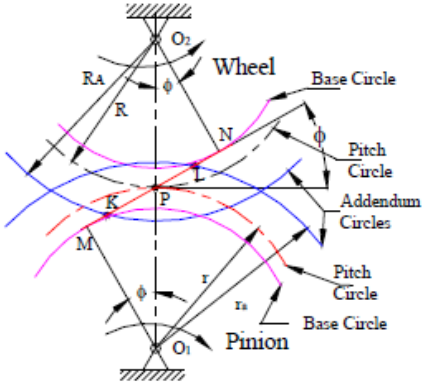

Pinion: The smaller of two meshed gears.
Pitch Circle: The circle, the radius of which is equal to the distance from the center of the gear to the pitch point.
Diametral pitch: Teeth per millimeter of pitch diameter.
Pitch Point: The point of tangency of the pitch circles of two meshing gears, where the Line of Centers crosses the pitch circles.
Pressure Angle: Angle between the Line of Action and a line perpendicular to the Line of Centers.
Profile Shift: An increase in the Outer Diameter and Root Diameter of a gear, introduced to lower the practical tooth number or acheive a non-standard Center Distance.
Ratio: Ratio of the numbers of teeth on mating gears.
Root Circle: The circle that passes through the bottom of the tooth spaces.
Root Diameter: The diameter of the Root Circle.
Working Depth: The depth to which a tooth extends into the space between teeth on the mating gear

Addendum: The radial distance between the Pitch Circle and the top of the teeth.
Arc of Action: Is the arc of the Pitch Circle between the beginning and the end of the engagement of a given pair of teeth.
Arc of Approach: Is the arc of the Pitch Circle between the first point of contact of the gear teeth and the Pitch Point.
Arc of Recession: That arc of the Pitch Circle between the Pitch Point and the last point of contact of the gear teeth.
Backlash: Play between mating teeth.
Base Circle: The circle from which is generated the involute curve upon which the tooth profile
is based.
Center Distance: The distance between centers of two gears.
Chordal Addendum: The distance between a chord, passing through the points where the Pitch
Circle crosses the tooth profile, and the tooth top.
Chordal Thickness: The thickness of the tooth measured along a chord passing through the
points where the Pitch Circle crosses the tooth profile.
Circular Pitch: Millimeter of Pitch Circle circumference per tooth.
Circular Thickness: The thickness of the tooth measured along an arc following the Pitch Circle
Clearance: The distance between the top of a tooth and the bottom of the space into which it fits on the meshing gear.
Contact Ratio: The ratio of the length of the Arc of Action to the Circular Pitch.
Dedendum: The radial distance between the bottom of the tooth to pitch circle.
Diametral Pitch: Teeth per mm of diameter.

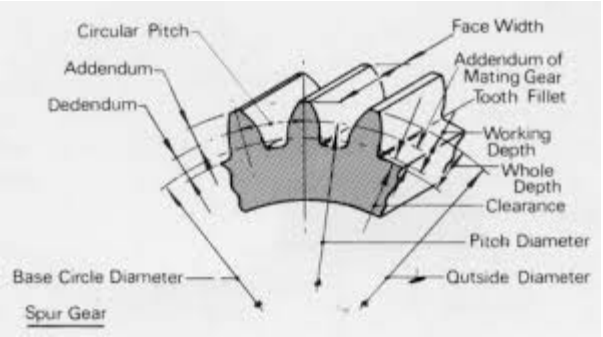

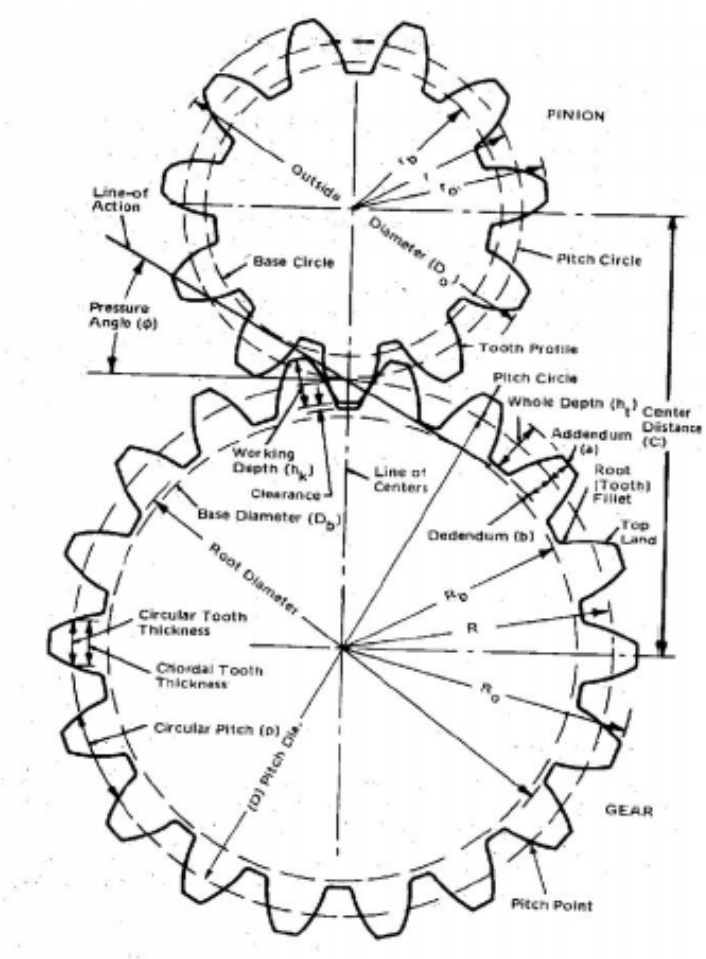

$$m = \frac{D_A}{t_A} = \frac{D_B}{t_B} = \frac{D_C}{t_C}$$

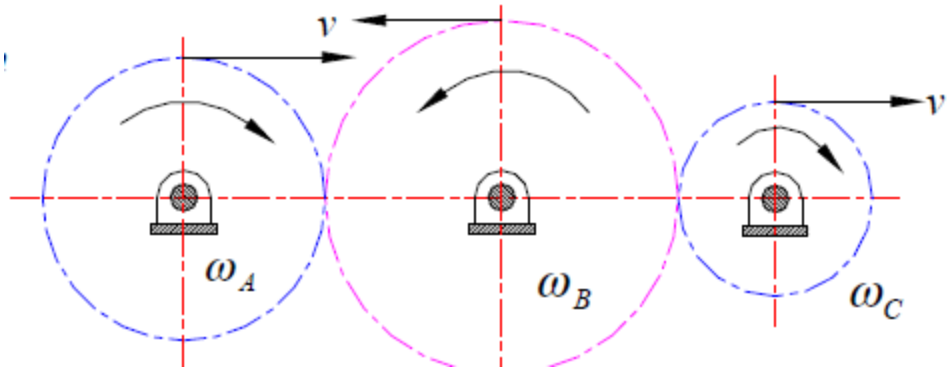

$$v = \omega_A \frac{D_A}{2} = \omega_B \frac{D_B}{2} = \omega_C \frac{D_C}{2}$$

$$\omega_A D_A = \omega_B D_B = \omega_C D_C$$

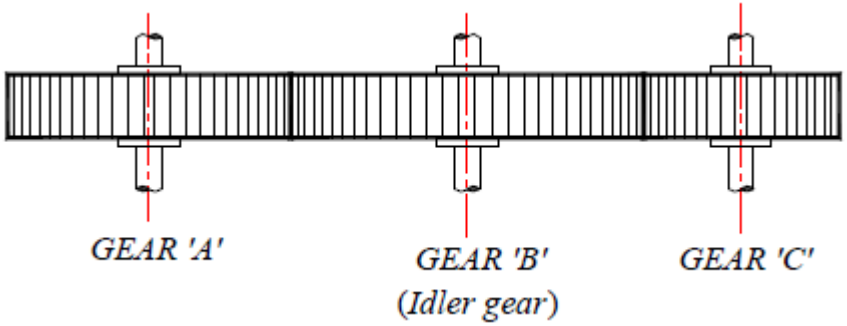

$$\omega_A t_A = \omega_B t_B = \omega_C t_C$$

$$N_A t_A = N_B t_B = N_C t_C$$

In an ideal gear box, the input and output powers are the same so;

$$P = \frac{2\pi\, N_1 T_1}{60} = \frac{2\pi\, N_2 T_2}{60}$$

$$N_1 T_1 = N_2 T_2 \quad \Rightarrow \quad \frac{T_2}{T_1} = \frac{N_1}{N_2} = GR$$

$$\eta = \frac{Power\ out}{Power\ In} = \frac{2\pi \times N_2 T_2 \times 60}{2\pi \times N_1 T_1 \times 60} = \frac{N_2 T_2}{N_1 T_1}$$

The velocity of each tooth on A and B are the same
so: $\omega_A t_A = \omega_B t_B$ *-as they are simple gears.*
Likewise for C and D, $\omega_C t_C = \omega_D t_D$.

$$\frac{\omega_A}{t_B} = \frac{\omega_B}{t_A} \quad \text{and} \quad \frac{\omega_C}{t_D} = \frac{\omega_D}{t_C}$$

$$\omega_A = \frac{t_B \times \omega_B}{t_A} \quad \text{and} \quad \omega_C = \frac{t_D \times \omega_D}{T_C}$$

$$\omega_A \times \omega_C = \frac{t_B \times \omega_B}{t_A} \times \frac{t_D \times \omega_D}{t_C}$$

$$\frac{\omega_A \times \omega_C}{\omega_B \times \omega_D} = \frac{t_B}{t_A} \times \frac{t_D}{t_C}$$

Since gear B and C are on the same shaft

$$\omega_B = \omega_C$$

$$\frac{\omega_A}{\omega_D} = \frac{t_B}{t_A} \times \frac{t_D}{t_C} = GR$$

Since $\omega = 2 \times \pi \times N$

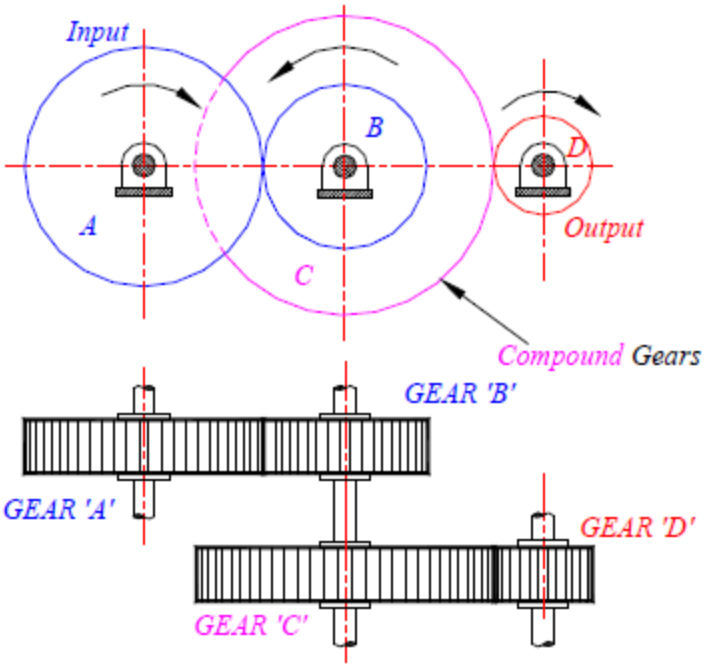

$$\frac{N(In)}{N(Out)} = \frac{t_B}{t_A} \times \frac{t_D}{t_C} = GR$$

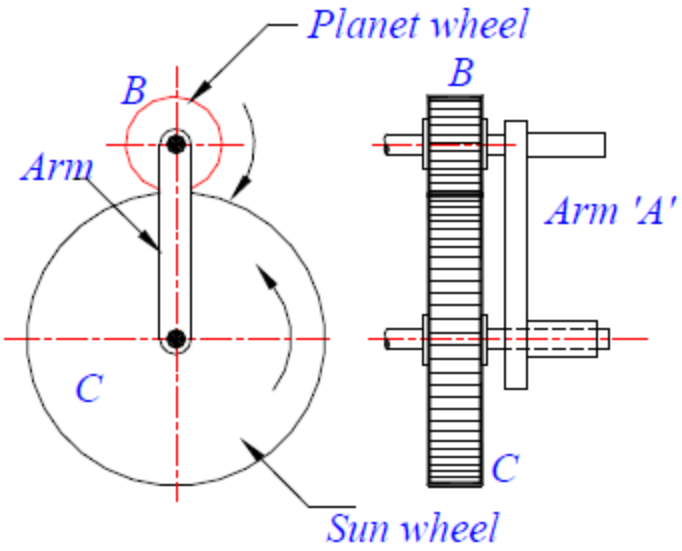

Step	Action	A	B	C
1	Revolve all once	1	1	1
2	Revolve C by –1 revolution, keeping the arm fixed	0	$+\frac{t_C}{t_B}$	-1
3	Add	1	$1+\frac{t_C}{t_B}$	0

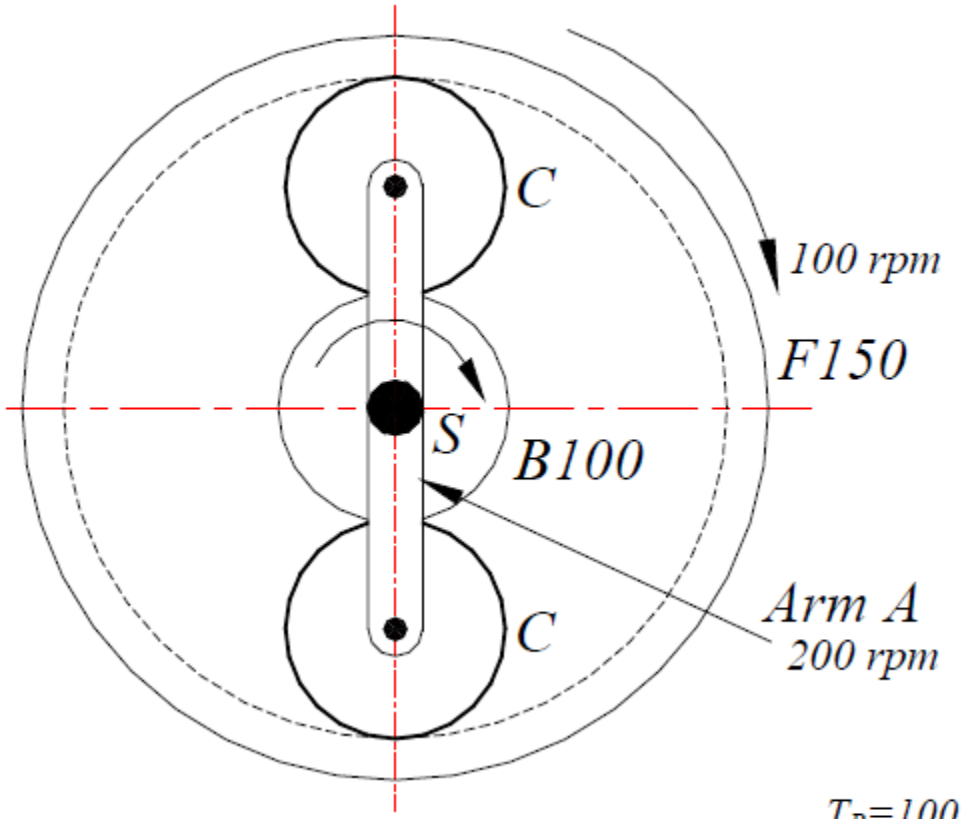

In an ecicyclic gear train shown in figure, the arm A is fixed to the shaft S. The wheel B having 100 teeth rotates freely on the shaft S. The wheel F having 150 teeth driven separately. If the arm rotates at 200 rpm and wheel F at 100 rpm in the same direction; find (a) number of teeth on the gear C and (b) speed of wheel B.

$T_B=100;$ $T_F=150;$ $N_A=200rpm;$ $N_F=100rpm$

$$r_F = r_B + 2r_C$$
$$T_F = T_B + 2T_C$$
$$150 = 100 + 2 \times T_C$$
$$T_C = 25 \rightarrow \text{Number of teeth on gears } C$$

$$\therefore \text{Train value} = -\frac{T_B}{T_F}$$

$$\text{also} \quad TV = \frac{N_L - N_{Arm}}{N_F - N_{Arm}} = \frac{N_F - N_A}{N_B - N_A}$$

$$\therefore \quad -\frac{T_B}{T_F} = \frac{N_F - N_A}{N_B - N_A}$$

$$-\frac{100}{150} = \frac{100 - 200}{N_B - 200} \quad \Rightarrow \quad N_E = 350$$

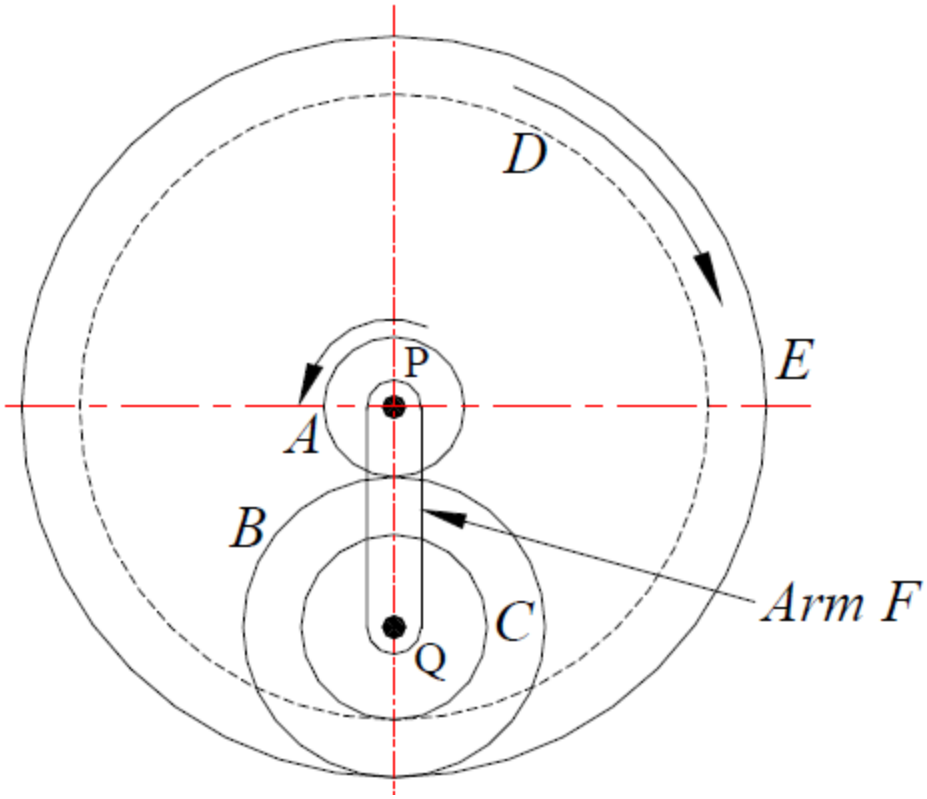

In a compound epicyclic gear train as shown in the figure, has gears A and an annular gears D & E free to rotate on the axis P. B and C is a compound gear rotate about axis Q. Gear A rotates at 90 rpm CCW and gear D rotates at 450 rpm CW. Find the speed and direction of rotation of arm F and gear E. Gears A,B and C are having 18, 45 and 21 teeth respectively. All gears having same module and pitch.

$T_A=18$; $T_B=45$; $T_C=21$;

$N_A = -90rpm$; $N_D=450rpm$

$$\therefore Train\ \ value = -\frac{T_A}{T_B}\times\frac{T_C}{T_D}$$

$$also \quad TV = \frac{N_L - N_{Arm}}{N_F - N_{Arm}} = \frac{N_D - N_F}{N_A - N_F}$$

$$\therefore \quad -\frac{T_A}{T_B}\times\frac{T_C}{T_D} = \frac{N_D - N_F}{N_A - N_F}$$

$$-\frac{18\times 21}{45\times 84} = \frac{450 - N_F}{-90 - N_F}$$

$$\Rightarrow \quad N_F = Speed\ \ of\ \ Arm = 400.9\,rpm - CW$$

$$r_D = r_A + r_B + r_C$$

$$T_D = T_A + T_B + T_C$$

$$T_D = 18 + 45 + 21 = 84\ \ teeth\ \ on\ \ gear\ \ D$$

$$r_E = r_A + 2r_B$$
$$T_E = T_A + 2T_B$$
$$T_E = 18 + 2 \times 45$$
$$T_E = 108 \rightarrow Number\ of\ teeth\ on\ gear\ E$$

Gears A and E rotates in the opposite directions:

$$\therefore Train\ value = -\frac{T_A}{T_E}$$

$$also \quad TV = \frac{N_E - N_F}{N_A - N_F}$$

$$\therefore \quad -\frac{T_A}{T_E} = \frac{N_E - N_F}{N_A - N_F}$$

$$-\frac{18}{108} = \frac{N_E - 400.9}{-90 - 400.9}$$

$$\Rightarrow \quad N_E = Speed\ of\ gear\ E = 482.72\,rpm - CW$$