Now consider gears A, B and E:

$$r_E = r_A + 2r_B$$

$$\Rightarrow \quad T_E = T_A + 2T_B$$

$$T_E = 18 + 2 \times 45$$

$$T_E = 108 \rightarrow Number\ of\ teeth\ on\ gear\ E$$

Gears A and E rotates in the opposite directions:

$$\therefore Train\ value = -\frac{T_A}{T_E}$$

$$also \quad TV = \frac{N_E - N_F}{N_A - N_F}$$

$$\therefore \quad -\frac{T_A}{T_E} = \frac{N_E - N_F}{N_A - N_F}$$

$$-\frac{18}{108} = \frac{N_E - 400.9}{-90 - 400.9}$$

$$\Rightarrow \quad N_E = Speed\ of\ gear\ E = 482.72\, rpm - CW$$

Problem 3: In an epicyclic gear of sun and planet type shown in figure 3, the pitch circle diameter of the annular wheel *A* is to be nearly 216mm and module 4mm. When the annular ring is stationary, the spider that carries three planet wheels *P* of equal size to make *one revolution* for every *five revolution* of the driving spindle carrying the sun wheel.

Determine the number of teeth for all the wheels and the exact pitch circle diameter of the annular wheel. If an input torque of 20 N-m is applied to the spindle carrying the sun wheel, determine the fixed torque on the annular wheel.

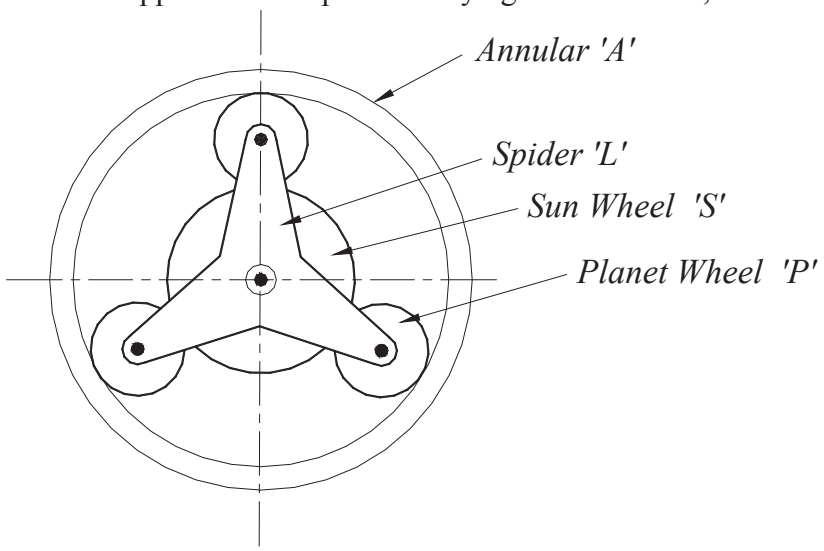

Solution: Module being the same for all the meshing gears:

$$T_A = T_S + 2T_P$$

$$T_A = \frac{PCD\ of\ A}{m} = \frac{216}{4} = 54\, teeth$$

Operation	***Spider arm L***	Sun Wheel S T_S	Planet wheel P T_P	Annular wheel A $T_A = 54$
Arm L is fixed & Sun wheel *S* is given +1 revolution	0	+1	$-\frac{T_S}{T_P}$	$-\frac{T_S}{T_P}\times\frac{T_P}{T_A} = -\frac{T_S}{T_A}$
Multiply by *m* (*S* rotates through *m* revolution)	*0*	*m*	$-\frac{T_S}{T_P}m$	$-\frac{T_S}{T_A}m$
Add *n* revolutions to all elements	*n*	*m+n*	$n-\frac{T_S}{T_P}m$	$n-\frac{T_S}{T_A}m$

If L rotates +1 revolution: $\therefore \quad n = 1 \quad (1)$

The sun wheel S to rotate +5 revolutions correspondingly:

$$\therefore \quad n + m = 5 \quad (2)$$

From (1) and (2) $\quad m = 4$

When A is fixed:

$$n - \frac{T_S}{T_A}m = 0 \qquad \Rightarrow \qquad T_A = 4T_S$$

$$\therefore \quad T_S = \frac{54}{4} = 13.5\,teeth$$

But fractional teeth are not possible; therefore T_S should be either 13 or 14 and T_A correspondingly 52 and 56.

Trial 1: Let $T_A = 52$ and $T_S = 13$

$$\therefore \quad T_P = \frac{T_A - T_S}{2} = \frac{52-13}{4} = 19.5\,teeth$$ - ***This is impracticable***

Trial 2: Let $T_A = 56$ and $T_S = 14$

$$\therefore \quad T_P = \frac{T_A - T_S}{2} = \frac{56-14}{4} = 21\,teeth$$ - ***This is practicable***

$\therefore$ $\boldsymbol{T_A = 56}$, $\boldsymbol{T_S = 14}$ **and** $\boldsymbol{T_P = 21}$

$\Rightarrow$ PCD of A = 56 × 4 = 224 mm

Also

Torque on $L \times \omega_L$ = Torque on S × ω_S

Torque on $L \times \omega_L = 20 \times \frac{5}{1} = 100\,N-m$

$\therefore$ Fixing torque on A = $(T_L - T_S)$ = 100 – 20 = **80 N-m**

]

Problem 4: The gear train shown in figure 4 is used in an indexing mechanism of a milling machine. The drive is from gear wheels *A* and *B* to the bevel gear wheel *D* through the gear train. The following table gives the number of teeth on each gear.

Gear	A	B	C	D	E	F
Number of teeth	72	72	60	30	28	24
Diametral pitch in mm	08	08	12	12	08	08

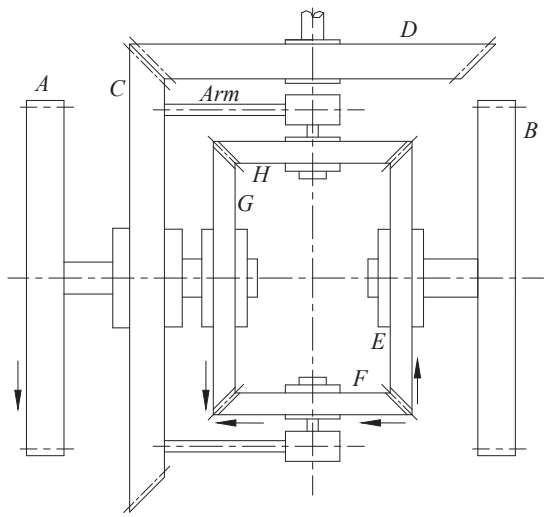

Figure 4

How many revolutions does D makes for one revolution of A under the following situations:

a. If *A* and *B* are having the same speed and same direction
b. If *A* and *B* are having the same speed and opposite direction
c. If *A* is making 72 rpm and *B* is at rest
d. If *A* is making 72 rpm and *B* 36 rpm in the same direction

Solution:

Gear D is external to the epicyclic train and thus C and D constitute an ordinary train.

Operation	***Arm C (60)***	***E (28)***	***F (24)***	***A (72)***	***B (72)***	***G (28)***	***H (24)***
Arm or C is fixed & wheel *A* is given +1 revolution	0	-1	$-\frac{28}{24}=-\frac{7}{6}$	*+1*	-1	*+1*	$\frac{28}{24}=\frac{7}{6}$
Multiply by *m* (*A* rotates through *m* revolution)	*0*	*-m*	$-\frac{7}{6}m$	*+m*	*-m*	*+m*	$\frac{7}{6}m$
Add *n* revolutions to all elements	*n*	*n - m*	$n-\frac{7}{6}m$	*n + m*	*n - m*	*n + m*	$n+\frac{7}{6}m$

(i) For one revolution of *A*: $n + m = 1$ (1)
For *A* and *B* for same speed and direction: $n + m = n - m$ (2)
From (1) and (2): $n = 1$ and $m = 0$

$\therefore$ If *C* or arm makes one revolution, then revolution made by *D* is given by:

$$\frac{N_D}{N_C} = \frac{T_C}{T_D} = \frac{60}{30} = 2$$

$$\therefore \quad N_D = 2N_C$$

(ii) *A* and *B* same speed, opposite direction: $(n + m) = -(n - m)$ (3)

$$n = 0; \quad m = 1$$

$\therefore$ When *C* is fixed and *A* makes one revolution, *D* does not make any revolution.

(iii) A is making 72 rpm: $(n + m) = 72$
B at rest $(n - m) = 0 \Rightarrow n = m = 36$ rpm

$\therefore$ C makes 36 rpm and D makes $36 \times \frac{60}{30} = 72\ rpm$

(iv) A is making 72 rpm and B making 36 rpm
$(n + m) = 72$ rpm and $(n - m) = 36$ rpm
$(n + (n - m)) = 72; \Rightarrow n = 54$

$\therefore$ D makes $54 \times \frac{60}{30} = 108\ rpm$

Problem 5: Figure 5 shows a compound epicyclic gear train, gears S_1 and S_2 being rigidly attached to the shaft Q. If the shaft P rotates at 1000 rpm clockwise, while the annular A_2 is driven in counter clockwise direction at 500 rpm, determine the speed and direction of rotation of shaft Q. The number of teeth in the wheels are $S_1 = 24$; $S_2 = 40$; $A_1 = 100$; $A_2 = 120$.

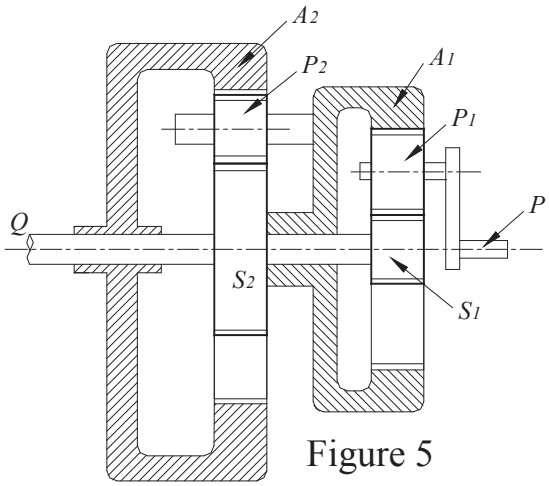

Figure 5

***Solution*:** Consider the gear train $P\ A_1\ S_1$:

Operation	***Arm P***	***A_1 (100)***	***S_1 (24)***
Arm P is fixed & wheel A_1 is given +1 revolution	0	+1	$+\frac{100}{P_1} \times -\frac{P_1}{24} = -\frac{25}{6}$
Multiply by m (A_1 rotates through m revolution)	*0*	$+m$	$-\frac{25}{6}m$
Add n revolutions to all elements	n	$n+m$	$n - \frac{25}{6}m$

OR

Operation	***Arm P***	***A_1 (100)***	***S_1 (24)***
Arm P is fixed & wheel A_1 is given -1 revolution	0	-1	$-\frac{A_1}{P_1} \times -\frac{P_1}{S_1} = +\frac{A_1}{S_1}$
	0	-1	$\frac{100}{24} = \frac{25}{6}$
Add +1 revolutions to all elements	+1	0	$\frac{25}{6} + 1 = \frac{31}{6}$

If A_1 is fixed: $n + m$; gives $n = -m$

$$\frac{N_P}{N_{S1}} = \frac{n}{n + \frac{25}{6}n} = \frac{1}{\frac{31}{6}} = \frac{6}{31}$$

$$\therefore \quad N_P = \frac{6}{31} N_{S1}$$

Now consider whole gear train:

Operation	***A_1 (100)***	***A_2 (120)***	**S_1 (24), S_2 (40) and Q**	Arm P
A_1 is fixed & wheel A_2 is given +1 revolution	0	+1	$+\frac{120}{P_2}\times-\frac{P_2}{40}$ $=-3$	$-3\times\frac{6}{31}$ $=-\frac{18}{31}$
Multiply by m (A_1 rotates through m revolution)	*0*	$+m$	$-3m$	$-\frac{18}{31}m$
Add n revolutions to all elements	n	$n+m$	$n-3m$	$n-\frac{18}{31}m$

When P makes 1000 rpm: $n-\frac{18}{31}m = 1000$ (1)

and A_2 makes – 500 rpm: $n+m = -500$ (2)

from (1) and (2):

$$-500-m-\frac{18}{31}m = 1000$$

$$(31\times1000)+(500\times31) = -49m$$

$$\therefore \quad m = -949\,rpm$$

$$and \quad n = 949-500 = 449\,rpm$$

$$\therefore \quad N_Q = n-3m = 449-(3\times-949) = 3296 \text{ rpm}$$

Problem 6. An internal wheel B with 80 teeth is keyed to a shaft F. A fixed internal wheel C with 82 teeth is concentric with B. A Compound gears D-E meshed with the two internal wheels. D has 28 teeth and meshes with internal gear C while E meshes with B. The compound wheels revolve freely on pin which projects from a arm keyed to a shaft A co-axial with F. if the wheels have the same pitch and the shaft A makes 800 rpm, what is the speed of the shaft F? Sketch the arrangement.

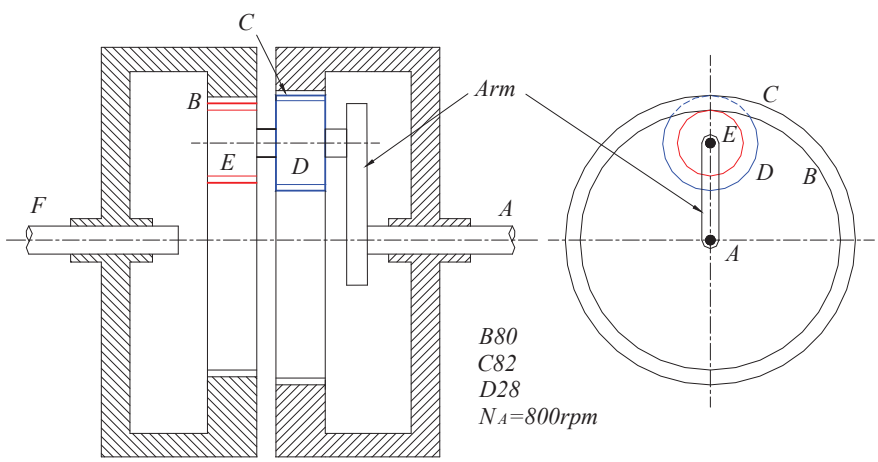

Data: $t_B = 80;\quad t_C = 82;\quad D = 28;\quad N_A = 800\ rpm$

Solution: The pitch circle radius is proportional to the number of teeth:

$$r_C - r_D = r_B - r_E$$
$$t_C - t_D = t_B - t_E$$
$$82 - 28 = 80 - t_E$$
$$t_E = 26$$
$$-number\ of\ teeth\ on\ gear\ E$$

Operation	Arm	*B (80)*	*Compound Gear wheel*		*C (82)*
			E(26)	*D (28)*	
Arm is fixed & *B* is given ONE revolution (CW)	*0*	*+1*	$+\frac{80}{26}$	$+\frac{80}{26}$	$+\frac{80}{26}\times\frac{28}{82}$
Multiply by *m* (B rotates through *m* revolution)	*0*	$+m$	$+\frac{40}{13}m$	$+\frac{40}{13}m$	$+\frac{40}{13}\times\frac{14}{41}m$
Add n revolutions to all elements	n	$m+n$	$\frac{40}{13}m+n$	$\frac{40}{13}m+n$	$\frac{40}{13}\times\frac{14}{41}m+n$

Since the wheel C is fixed and the arm (shaft) A makes 800 rpm,

$$\Rightarrow \qquad n = 800rpm$$
$$\frac{40}{13}\times\frac{14}{41}m + n = 0$$
$$\frac{40}{13}\times\frac{14}{41}m + 800 = 0$$
$$m = -761.42rpm$$

$$Speed\ of\ gear\ B = m + n = -761.42 + 800 = 38.58rpm$$
$$Speed\ of\ gear\ B = Speed\ of\ shaft\ F = 38.58rpm$$

Problem 7: The fig shows an Epicyclic gear train. Wheel E is fixed and wheels C and D are integrally cast and mounted on the same pin. If arm A makes one revolution per sec (Counter clockwise) determine the speed and direction of rotation of the wheels B and F.

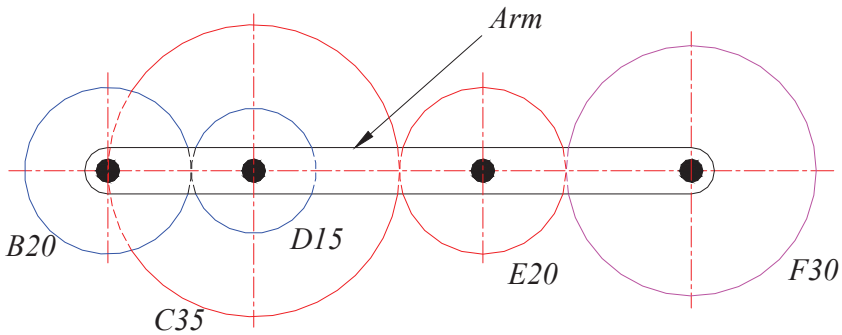

Solution:

Data: *tB = 20; tC = 35; tD = 15; tE = 20; tF = 30 NA = 1rps-(CCW)*

Operation	Arm	*B (20)*	*Compound Gear wheel*		*E (20)*	*F (30)*
			D (15)	*C (35)*		
Arm is fixed & B is given ONE revolution (CW)	*0*	+1	$-\frac{20}{15}$	$-\frac{20}{15}$	$-\frac{4}{3}\times-\frac{35}{20} = +\frac{7}{3}$	$\frac{7}{3}\times-\frac{20}{30}$
Multiply by *m* (B rotates through *m* revolution)	*0*	$+m$	$-\frac{4}{3}m$	$-\frac{4}{3}m$	$\frac{7}{3}m$	$-\frac{14}{9}m$
Add n revolutions to all elements	n	$m+n$	$n-\frac{4}{3}m$	$n-\frac{4}{3}m$	$\frac{7}{3}m+n$	$n-\frac{14}{9}m$

Since the wheel E is fixed and the arm A makes 1 rps-CCW

$$\Rightarrow \quad n=-1rps \quad and \quad \frac{7}{3}m+n=0$$

$$\frac{7}{3}m-1=0 \quad \Rightarrow \quad m=\frac{3}{7}=0.429$$

$$Speed\ of\ gear\ B=m+n=0.429-1\ =-0.571rps\ (CCW)$$

$$Speed\ of\ gear\ F=n-\frac{14}{9}m=-1-\frac{14}{9}0.429=-1.667\,(CCW)$$

Problem 7: In the gear train shown, the wheel C is fixed, the gear B, is keyed to the input shaft and the gear F is keyed to the output shaft.

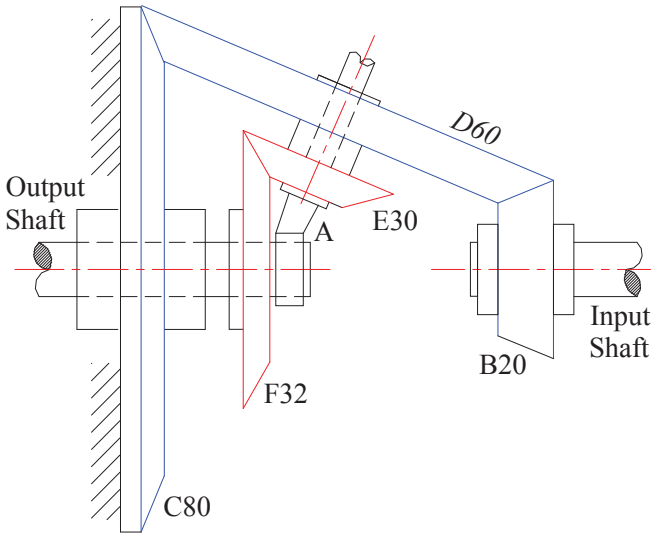

The arm A, carrying the compound wheels D and E turns freely on the out put shaft. If the input speed is 1000 rpm (ccw) when seen from the right, determine the speed of the output shaft. The number of teeth on each gear is indicated in the figures. Find the output torque to keep the wheel C fixed if the input power is 7.5 kW.

Solution:

Data :

$t_B = 20$; $t_C = 80$; $t_D = 60$; $t_E = 30$; $t_F = 32$; $N_B = 1000$ rpm (ccw) (input speed); $P = 7.5$ kW

Operation	Arm	*B (20)* Input	*Compound Gear wheel*		*C (80)*	*F (32)*
			D (60)	*E (30)*		
Arm is fixed & B is given +1 revolution	*0*	+1	$\frac{20}{60} = \frac{1}{3}$	$\frac{1}{3}$	$\frac{1}{3} \times -\frac{60}{80} = -\frac{1}{4}$	$\frac{1}{3} \times -\frac{30}{32}$ $-\frac{5}{16}$
Multiply by *m* (B rotates through *m* revolution)	*0*	*m*	$\frac{1}{3}m$	$\frac{1}{3}m$	$-\frac{1}{4}m$	$-\frac{5}{16}m$
Add n revolutions to all elements	*n*	*m+n*	$\frac{1}{3}m+n$	$\frac{1}{3}m+n$	$n-\frac{1}{4}m$	$n-\frac{5}{16}m$

Input shaft speed = 1000 rpm (ccw)

i.e., gear B rotates – 1000 rpm

$$m + n = -1000$$

$$Gear\ C\ is\ \ fixed; \qquad n - \frac{1}{4}m = 0$$

$$-1000 - m - 0.25m = 0$$

$$m = -\frac{1000}{1.25} = -800$$

$$n = -1000 + 800 = -200$$

$$Speed\ of\ F = n - \frac{5}{16}m$$

$$= -200 + 800\frac{5}{16} = 50$$

$$Speed\ of\ the\ output\ shaft\ F = +50rpm\ (CW)$$

$$Input\ power = P = \frac{2 \times \pi \times N_B T_B}{60}$$

$$7.5 \times 1000 = \frac{2 \times \pi \times -1000 \times T_B}{60}$$

$$T_{\mathbf{B}} = -\frac{7500 \times 60}{2 \times \pi \times 1000} = -71.59Nm$$

$$From\ the\ energy\ equation;$$

$$T_{\mathbf{B}} N_B + T_F N_F + T_C N_C = 0$$

$$Since\ C\ is\ \ fixed: N_C = 0$$

$$T_{\mathbf{B}} N_B + T_F N_F = 0$$

$$-71.59 \times 1000 + T_F \times 50 = 0$$

$$T_F = +1431.8Nm$$

$$From\ the\ torque\ equation:$$

$$T_{\mathbf{B}} + T_F + T_C = 0$$

$$-71.59 + 1431.8 + T_C = 0$$

$$\therefore \qquad T_C = -1360.21Nm$$

The Torque required to hold the wheel C = 1360.21 Nm in the same direction of wheel

Problem 8: Find the velocity ratio of two co-axial shafts of the epicyclic gear train as shown in figure 6. S_1 is the driver. The number of teeth on the gears are $S_1 = 40$, $A_1 = 120$, $S_2 = 30$, $A_2 = 100$ and the sun wheel S_2 is fixed. Determine also the magnitude and direction of the torque required to fix S_2, if a torque of 300 N-m is applied in a clockwise direction to S_1

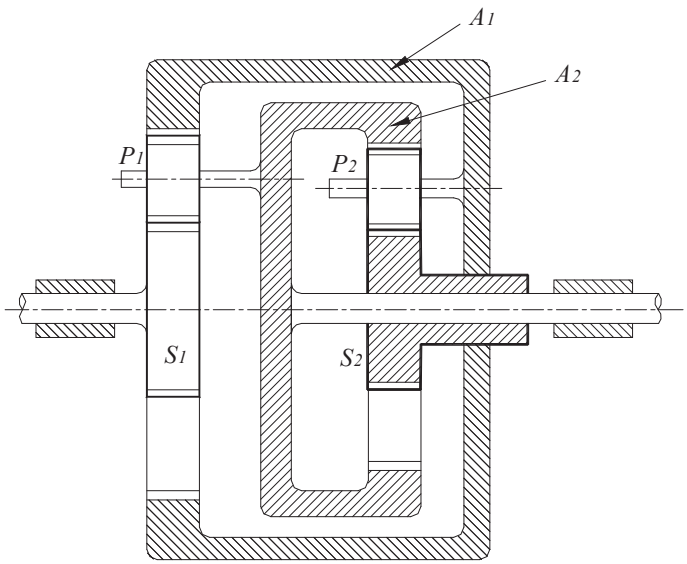

Figure 6

Solution: Consider first the gear train S_1, A_1 and A_2 for which A_2 is the arm, in order to find the speed ratio of S_1 to A_2, when A_1 is fixed.

(a) Consider gear train S_1, A_1 and A_2:

Operation	A_2 (100)	A_1 (120)	S_1 (40)
A_2 is fixed & wheel A_1 is given +1 revolution	0	+1	$-\frac{120}{40} = -3$
Multiply by m (A_1 rotates through m revolution)	0	$+m$	$-3m$
Add n revolutions to all elements	n	$n+m$	$n-3m$

A_1 is fixed: $m = -n$

$$\frac{N_{S1}}{N_{A2}} = \frac{n+3n}{n} = 4$$

$$\therefore \quad N_{S1} = 4\,N_{A2}$$

(b) Consider complete gear train:

Operation	A_1 (120)	A_2 (100)	S_1 (40)	S_2 (30)
A_1 is fixed & wheel S_2 is given +1 revolution	0	$-\frac{30}{100} = -\frac{3}{10}$	$-\frac{3}{10}\times 4 = -\frac{6}{5}$	+1
Multiply by m (A_1 rotates through m revolution)	0	$= -\frac{3}{10}m$	$-\frac{6}{5}m$	$+m$
Add n revolutions to all elements	n	$n-\frac{3}{10}m$	$n-\frac{6}{5}m$	$n+m$

S_2 is fixed $\Rightarrow$ $m = -n$

$$\frac{N_{S1}}{N_{A2}} = \frac{n + \frac{6}{5}n}{n + \frac{3}{10}n} = \frac{11}{5} \times \frac{10}{13} = \frac{22}{13}$$

Input torque on $S_1 = T_{S1} = 300$ N-m, in the direction of rotation.

$\therefore$ Resisting torque on A_2;

$$T_{A2} = 300 \times \frac{22}{13} = 507.7\, N - m$$

$\rightarrow$ *opposite to directiojn of rotation*

$\therefore$ Referring to the figure:
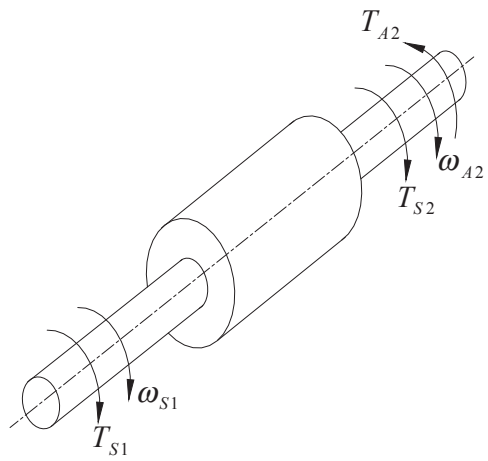
$$T_{S2} = 507.7 - 300 = 207.7\, N - m \qquad (CW)$$