(2) Draw the cam profile for the same operating conditions of problem (1), with the follower off set by 10 mm to the left of cam center.

Displacement diagram: Same as previous case.

Cam profile: Construction is same as previous case, except that the lines drawn from 1,2,3…. are tangential to the offset circle of 10mm dia. as shown in the fig.

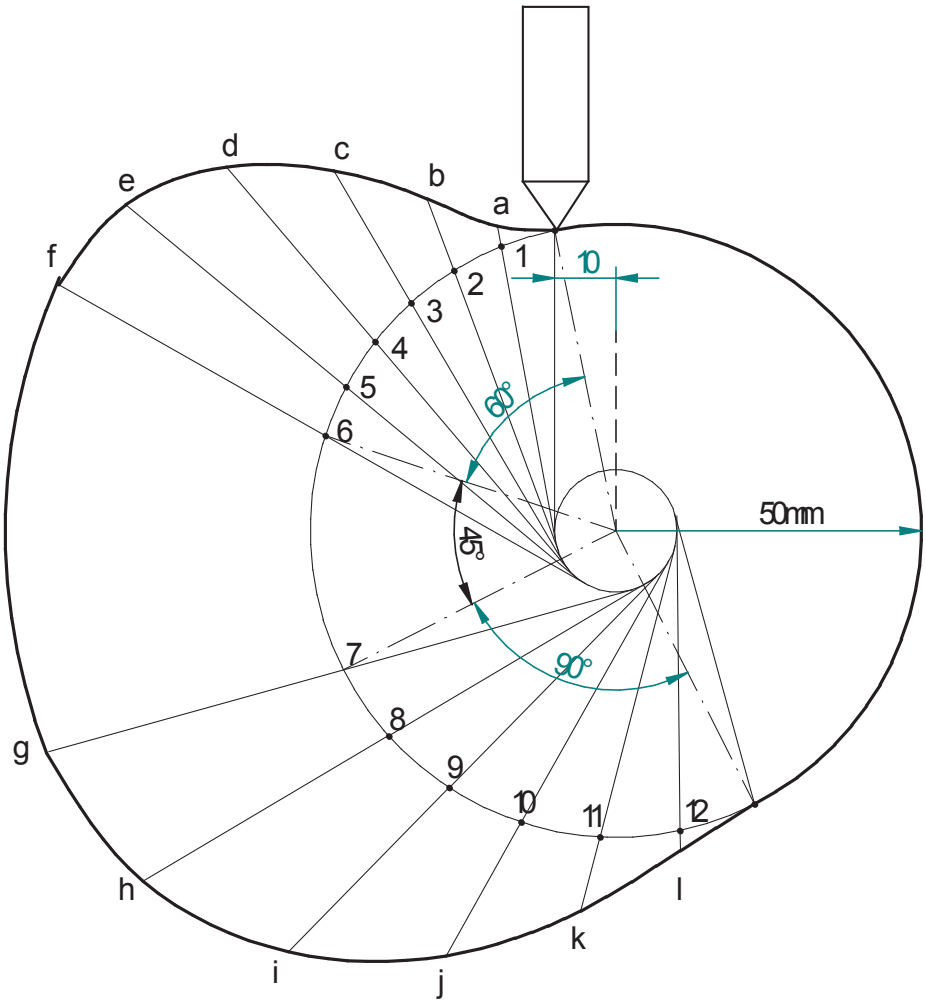

(3) Draw the cam profile for following conditions:

Follower type = roller follower, in-line; lift = 25mm; base circle radius = 20mm; roller radius = 5mm; out stroke with UARM, for 120^0 cam rotation; dwell for 60^0 cam rotation; return stroke with UARM, for 90^0 cam rotation; dwell for the remaining period. Determine max. velocity and acceleration during out stroke and return stroke if the cam rotates at 1200 rpm in clockwise direction.

Displacement diagram:

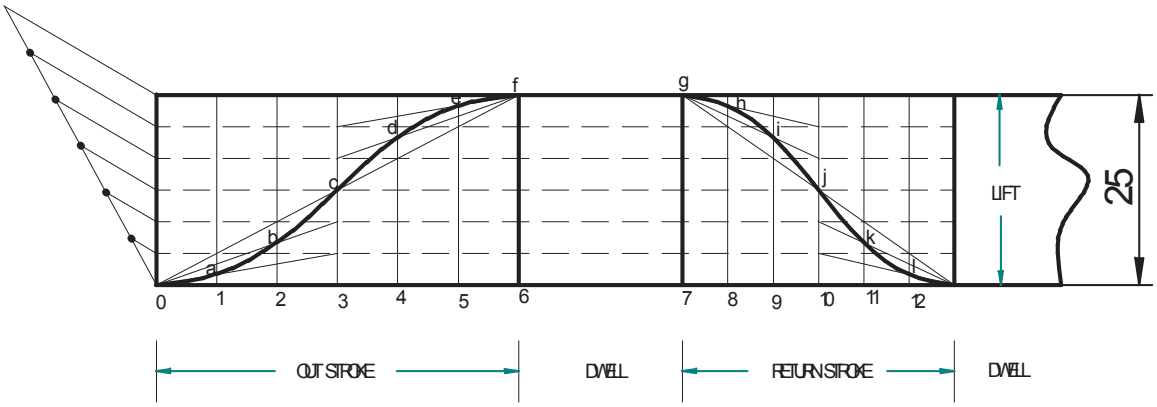

Cam profile: Construct base circle and prime circle (25mm radius). Mark points 1,2,3…..in direction opposite to the direction of cam rotation, on prime circle. Transfer points a,b,c…..l from displacement diagram. At each of these points a,b,c… draw circles of 5mm radius, representing rollers. Starting from the first point of contact between roller and base circle, draw a smooth free hand curve, tangential to all successive roller positions. This forms the required cam profile.

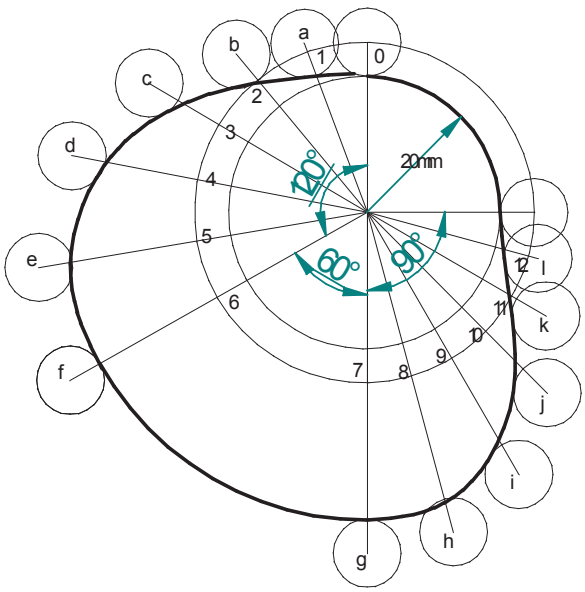

Calculations:

Angular velocity of the cam = $\omega = \frac{2\pi N}{60} = \frac{2 \times \pi \times 1200}{60} =$ **125.71rad/sec**

Max. velocity during outstroke $= vo_{\max} = \frac{2s}{t_o} = \frac{2\omega s}{\theta_o} =$

$= \frac{2 \times 125.71 \times 25}{2 \times \pi/3} = 2999.9$mm/sec =**2.999m/sec**

Max. velocity during return stroke = $vr_{\max} = \frac{2s}{t_r} = \frac{2\omega s}{\theta_r} = \frac{2 \times 125.71 \times 25}{\pi/2} =$

= 3999.86mm/sec = **3.999m/sec**

Acceleration of the follower during outstroke = $a_o = \frac{vo_{\max}}{t_o/2} = \frac{4\omega^2 s}{\theta_o^{\,2}} =$

$= \frac{4 \times (125.71)^2 \times 25}{\left(2 \times \pi/3\right)^2} = 359975$mm/sec^2 = **359.975m/sec^2**

Similarly acceleration of the follower during return stroke = $a_r = \frac{4\omega^2 s}{\theta_r^{\,2}} =$

$= \frac{4 \times (125.71)^2 \times 25}{\left(\pi/2\right)^2} = 639956$mm/sec^2 = **639.956m/sec^2**

(4) Draw the cam profile for conditions same as in (3), with follower off set to right of cam center by 5mm and cam rotating counter clockwise.

Displacement diagram: Same as previous case.

Cam profile: Construction is same as previous case, except that the lines drawn from 1,2,3…. are tangential to the offset circle of 10mm dia. as shown in the fig.

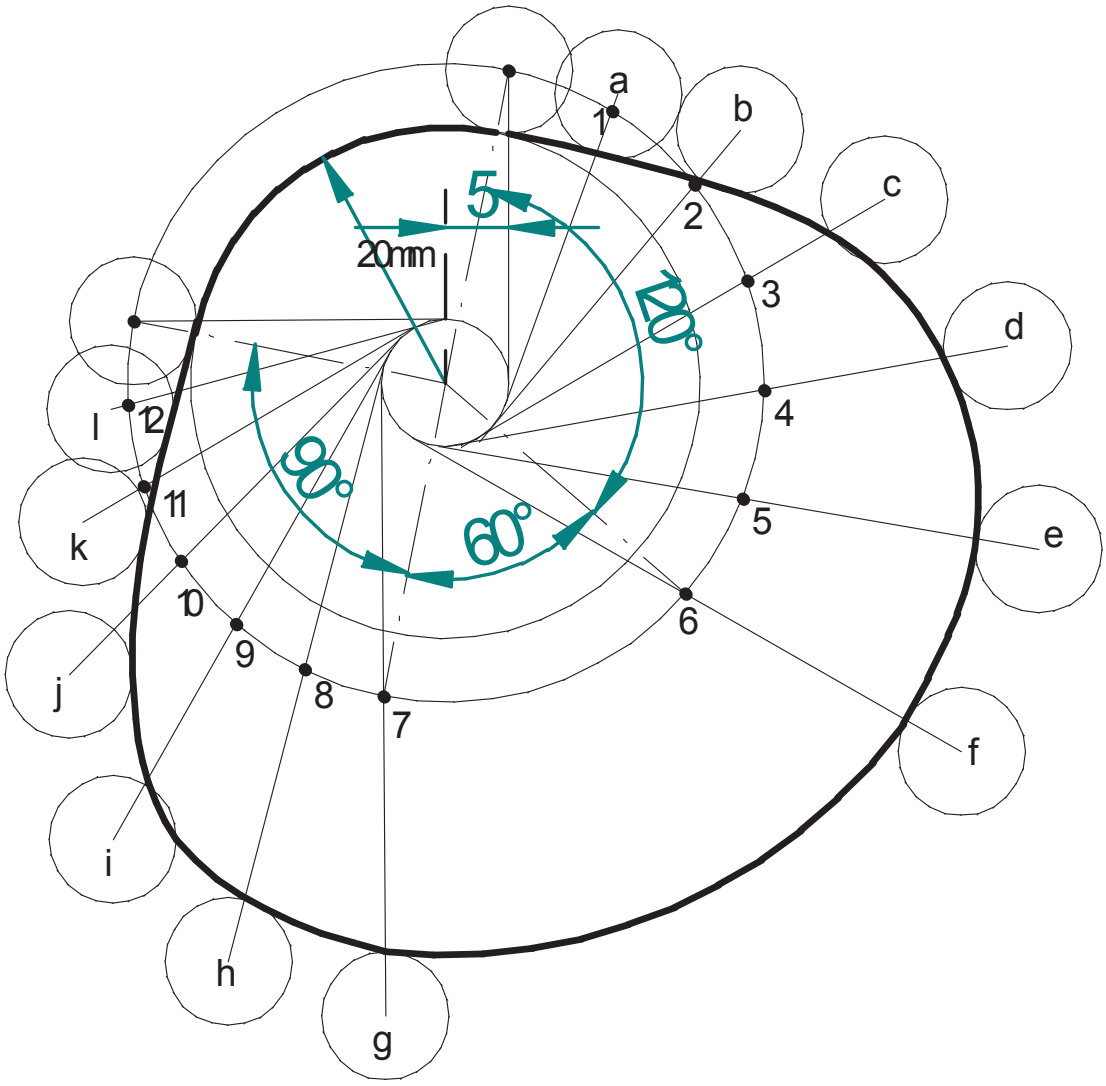

(5) Draw the cam profile for following conditions:

Follower type = roller follower, off set to the right of cam axis by 18mm; lift = 35mm; base circle radius = 50mm; roller radius = 14mm; out stroke with SHM in 0.05sec; dwell for 0.0125sec; return stroke with UARM, during 0.125sec; dwell for the remaining period. During return stroke, acceleration is 3/5 times retardation. Determine max. velocity and acceleration during out stroke and return stroke if the cam rotates at 240 rpm.

Calculations:

Cam speed = 240rpm. Therefore, time for one rotation = $\frac{60}{240} = 0.25\,\text{sec}$

Angle of out stroke = $\theta_o = \frac{0.05}{0.25} \times 360 = 72^0$

Angle of first dwell = $\theta_{w1} = \frac{0.0125}{0.25} \times 360 = 18^0$

Angle of return stroke = $\theta_r = \frac{0.125}{0.25} \times 360 = 180^0$

Angle of second dwell = $\theta_{w2} = 90^0$

Since acceleration is 3/5 times retardation during return stroke,

$a = \frac{3}{5} r$ (from acceleration diagram) $\therefore \frac{a}{r} = \frac{3}{5}$

But $a = \frac{v_{\max}}{t_a}; r = \frac{v_{\max}}{t_r} \therefore \frac{a}{r} = \frac{t_r}{t_a} = \frac{3}{5}$

Displacement diagram is constructed by selecting t_a and t_r accordingly.

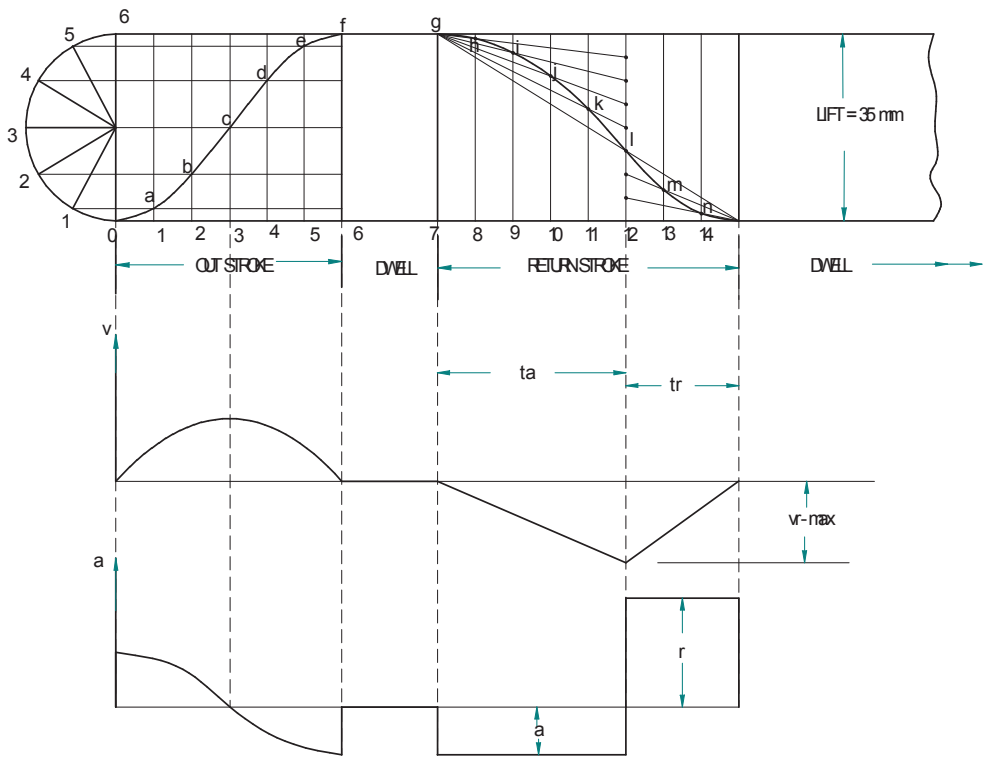

Angular velocity of cam = $\omega = \dfrac{2\pi N}{60} = \dfrac{2\times\pi\times 240}{60}$ =**25.14 rad/sec**

Max. velocity of follower during outstroke = $vo_{max} = \dfrac{\pi\omega s}{2\theta_o} =$

$= \dfrac{\pi\times 25.14\times 35}{2\times\left(2\times \pi/5\right)}$ = 1099.87mm/sec =**1.1m/sec**

Similarly Max. velocity during return stroke = $vr_{max} = \dfrac{2\omega s}{\theta_r} = \dfrac{2\times 25.14\times 35}{\pi} =$

= 559.9 mm/sec = **0.56m/sec**

Max. acceleration during outstroke = $ao_{max} = r\omega^2_p$ (from d3) = $\dfrac{\pi^2\omega^2 s}{2\theta_o^{\ 2}}$ =

$= \dfrac{\pi^2\times(25.14)^2\times 35}{2\times\left(2\times \pi/5\right)^2}$ = 69127.14mm/sec^2 = **69.13m/sec^2**

acceleration of the follower during return stroke =

$$a_r = \frac{vr_{max}}{t_a} = \frac{2\omega s/\theta_r}{5\times\pi/8\times\omega} = \frac{16\times\omega^2\times s}{5\times\pi\times\theta_r} = \frac{16\times(25.14)^2\times 35}{5\times\pi\times\pi} = 7166.37 \text{ mm/sec}^2 = \mathbf{7.17m/sec^2}$$

similarly retardation of the follower during return stroke =

$$r_r = \frac{vr_{max}}{t_r} = \frac{2\omega s/\theta_r}{3\times\pi/8\times\omega} = \frac{16\times\omega^2\times s}{3\times\pi\times\theta_r} = \frac{16\times(25.14)^2\times 35}{3\times\pi\times\pi} = 11943.9 \text{ mm/sec}^2 = \mathbf{11.94m/sec^2}$$

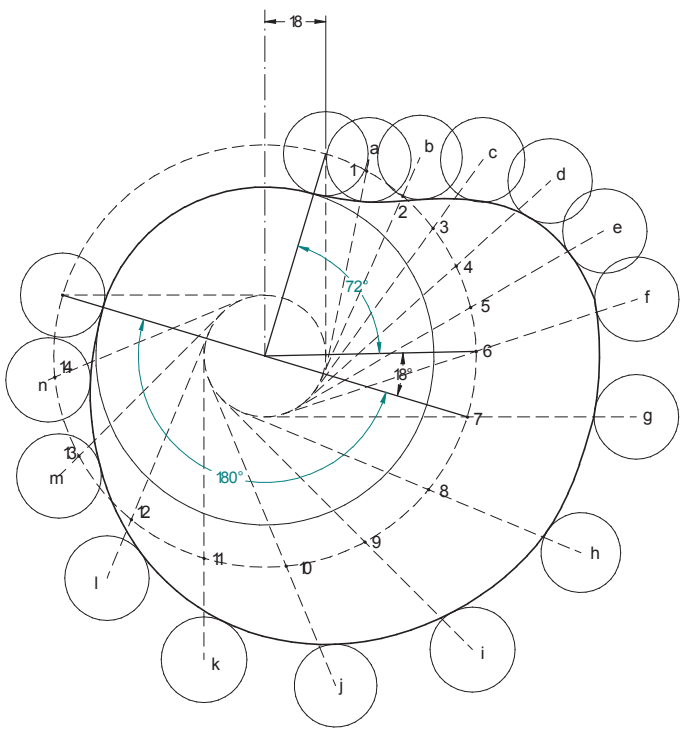

(6) Draw the cam profile for following conditions:

Follower type = knife edged follower, in line; lift = 30mm; base circle radius = 20mm; out stroke with uniform velocity in 120^0 of cam rotation; dwell for 60^0; return stroke with uniform velocity, during 90^0 of cam rotation; dwell for the remaining period.

Displacement diagram:

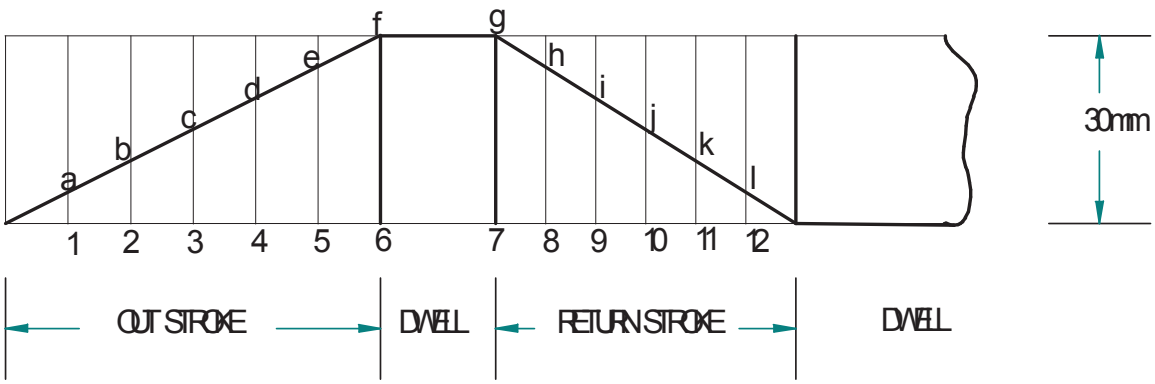

Cam profile:

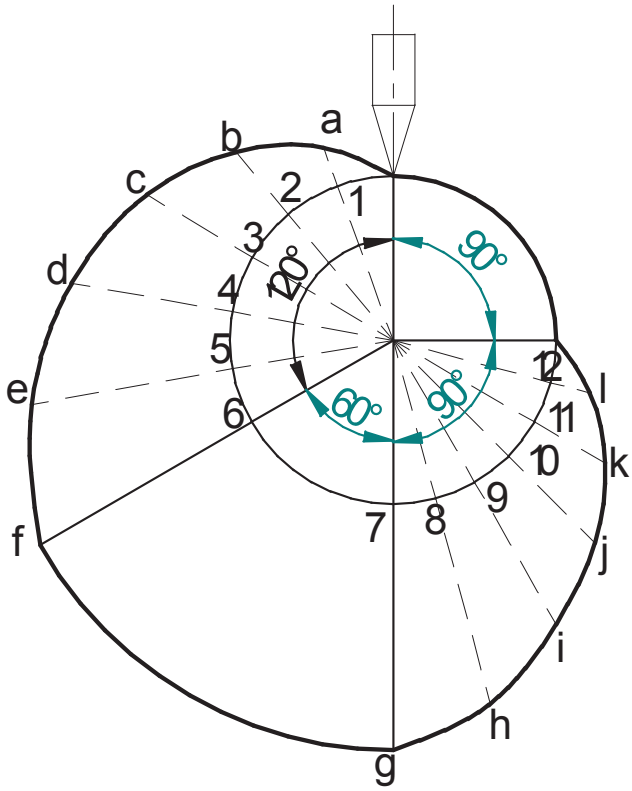

(7) Draw the cam profile for following conditions:

Follower type = oscillating follower with roller as shown in fig.; base circle radius = 20mm; roller radius = 7mm; follower to rise through 40^0 during 90^0 of cam rotation with cycloidal motion; dwell for 30^0; return stroke with cycloidal motion during 120^0 of cam rotation; dwell for the remaining period. Also determine the max. velocity and acceleration during outstroke and return stroke, if the cam rotates at 600 rpm.

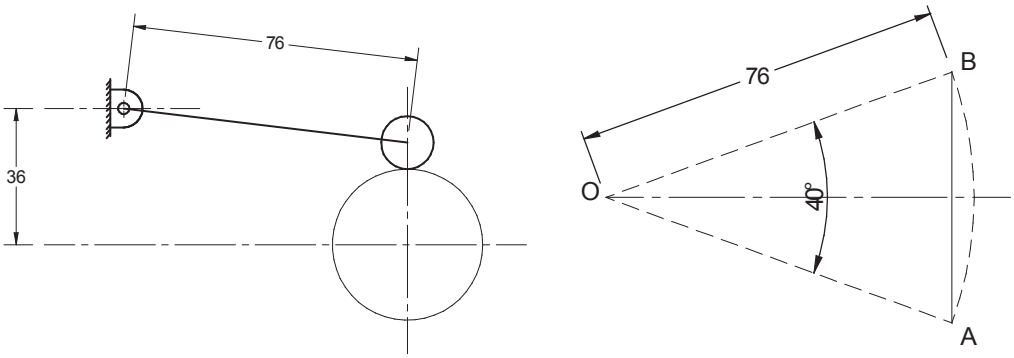

Lift of the follower = S = length AB $\approx$ arc AB = $OA \times \theta = 76 \times 40 \times \dfrac{\pi}{180}$ = 53 mm.

Radius of cycloid generating circle = $\dfrac{53}{2 \times \pi}$ = 8.4 mm

Displacement diagram;

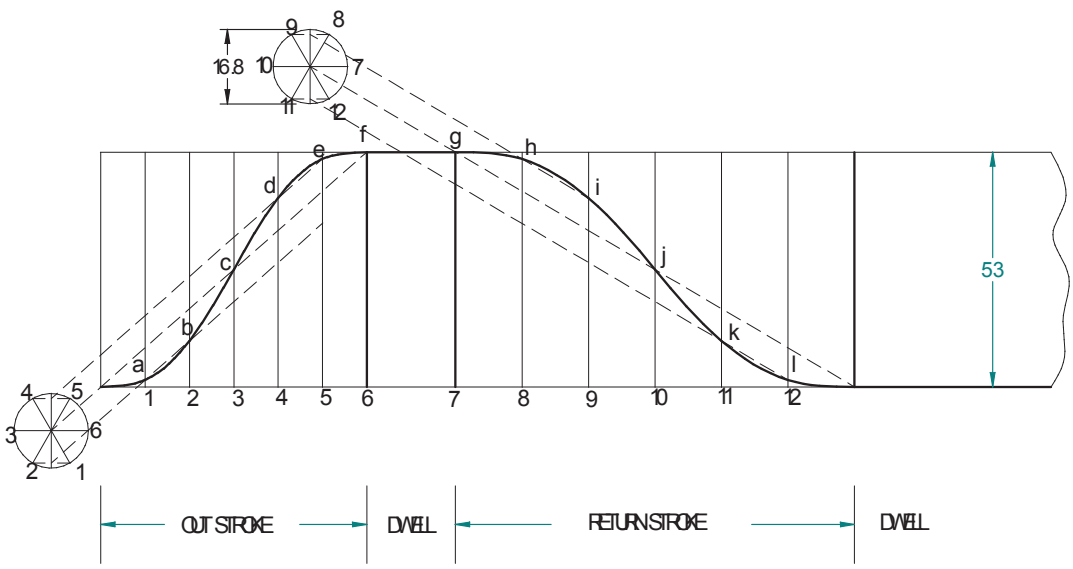

Angular velocity of cam = $\omega = \dfrac{2\pi N}{60} = \dfrac{2\times\pi\times 600}{60}$ = 62.86 rad/sec

vo_{max} = Max. velocity of follower during outstroke = $\dfrac{2\omega s}{\theta_o} = \dfrac{2\times 62.86\times 53}{\pi/2}$ = 4240.2 mm/sec

vr_{max} = Max. velocity of follower during return stroke = $\dfrac{2\omega s}{\theta_r} = \dfrac{2\times 62.86\times 53}{2\times\pi/3}$ = 3180 mm/sec

ao_{max} = Max. acceleration during outstroke = $\dfrac{2\pi\omega^2 s}{\theta_o^{\,2}} = \dfrac{2\times\pi\times(62.86)^2\times 53}{(\pi/2)^2}$ = 533077 mm/sec^2

= 533.1 m/sec^2.

ar_{max} = Max. acceleration during return stroke = $\dfrac{2\pi\omega^2 s}{\theta^2{}_r} = \dfrac{2\times\pi\times(62.86)^2\times 53}{(2\times\pi/3)^2}$ =

= 299855.8mm/sec^2 = 299.8 m/sec^2.

Cam profile: Draw base circle and prime circle. Draw another circle of radius equal to the distance between cam center and follower pivot point. Take the line joining cam center and pivot point as reference and draw lines indicating successive angular displacements of cam. Divide these into same number of divisions as in the displacement diagram. Show points 1', 2', 3'… on the outer circle. With these points as centers and radius equal to length of follower arm, draw arcs, cutting the prime circle at 1,2,3…. Transfer points a,b,c.. on to these arcs from displacement diagram. At each of these points a,b,c… draw circles of 7mm radius, representing rollers. Starting from the first point of contact between roller and base circle, draw a smooth free hand curve, tangential to all successive roller positions. This forms the required cam profile.

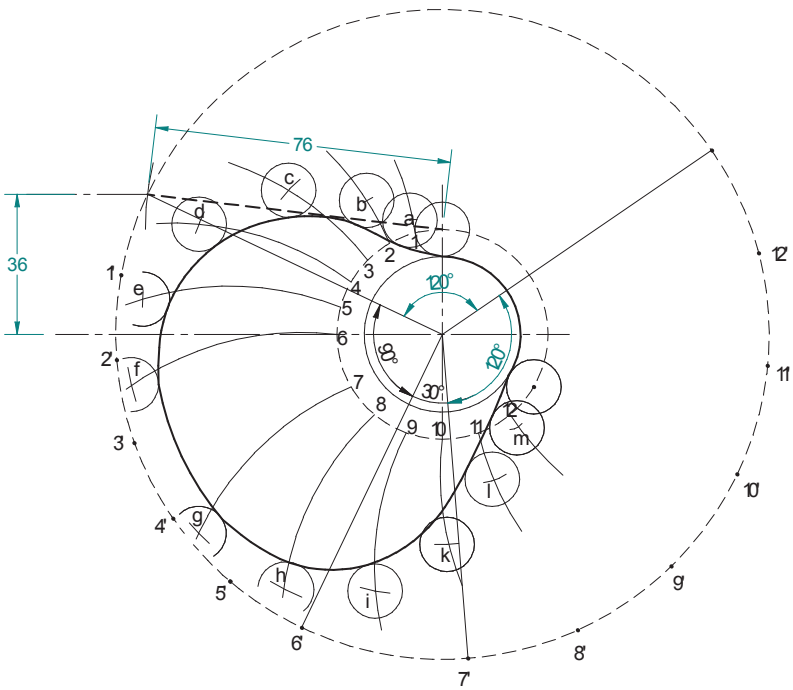

(8) Draw the cam profile for following conditions:

Follower type = knife edged follower, in line; follower rises by 24mm with SHM in 1/4 rotation, dwells for 1/8 rotation and then raises again by 24mm with UARM in 1/4 rotation and dwells for 1/16 rotation before returning with SHM. Base circle radius = 30mm.

Angle of out stroke (1) = $\theta_{01} = \frac{1}{4} \times 360^0 = 90^0$

Angle of dwell (1) = $\frac{1}{8} \times 360^0 = 45^0$

Angle of out stroke (2) = $\theta_{02} = \frac{1}{4} \times 360^0 = 90^0$

Angle of dwell (2) = $\frac{1}{16} \times 360^0 = 22.5^0$

Angle of return stroke = $\theta_r = \left[1 - \left(\frac{1}{4} + \frac{1}{8} + \frac{1}{4} + \frac{1}{16}\right)\right] \times 360 = \frac{5}{16} \times 360^0 = 112.5^0$

Displacement diagram:

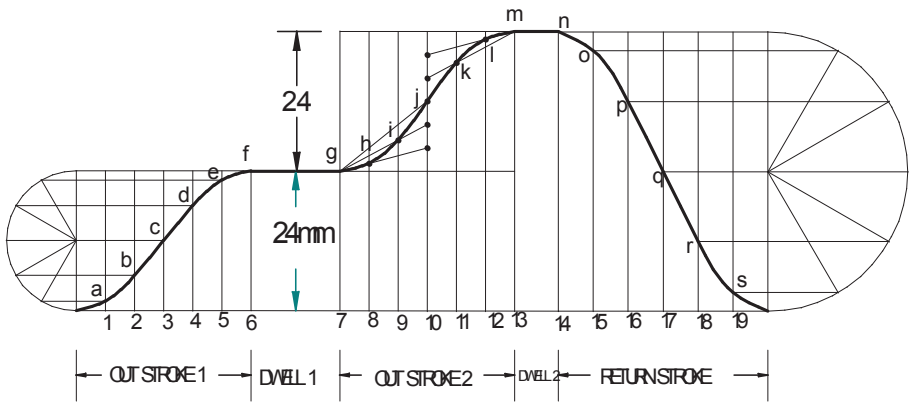

Cam profile:

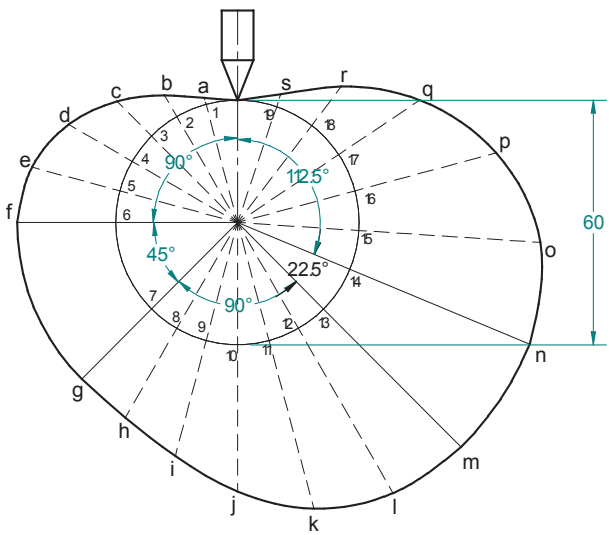

(9) Draw the cam profile for following conditions:

Follower type = flat faced follower, in line; follower rises by 20mm with SHM in 120^0 of cam rotation, dwells for 30^0 of cam rotation; returns with SHM in 120^0 of cam rotation and dwells during the remaining period. Base circle radius = 25mm.

Displacement diagram:

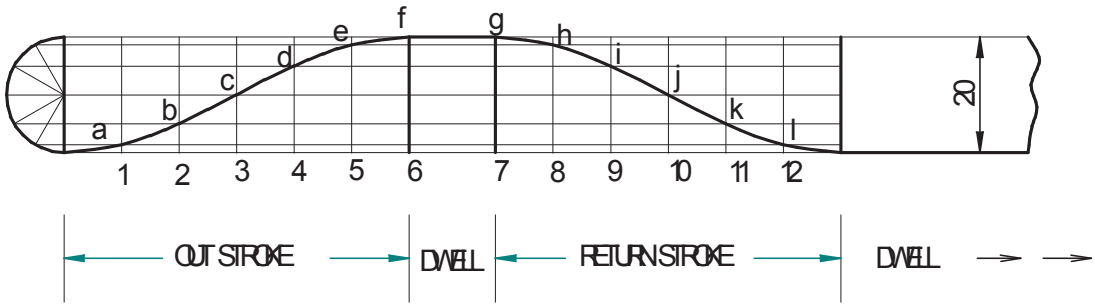

Cam profile: Construct base circle. Mark points 1,2,3…..in direction opposite to the direction of cam rotation, on prime circle. Transfer points a,b,c…..l from displacement diagram. At each of these points a,b,c… draw perpendicular lines to the radials, representing flat faced followers. Starting from the first point of contact between follower and base circle, draw a smooth free hand curve, tangential to all successive follower positions. This forms the required cam profile.

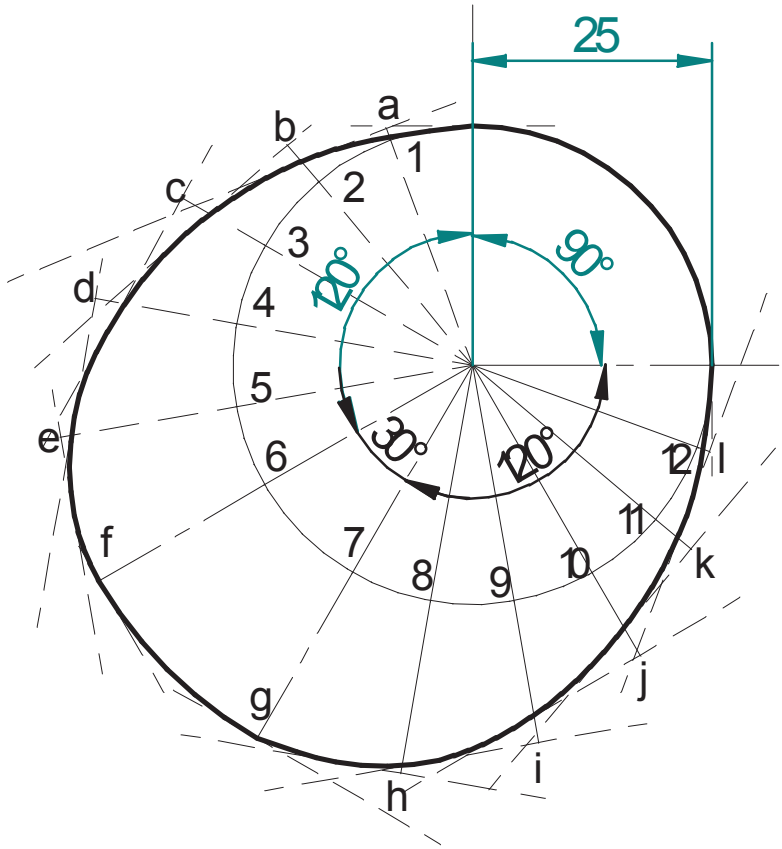

(10) Draw the cam profile for following conditions:

Follower type = roller follower, in line; roller dia. = 5mm; follower rises by 25mm with SHM in 180^0 of cam rotation, falls by half the distance instantaneously; returns with Uniform velocity in 180^0 of cam rotation. Base circle radius = 20m.

Displacement diagram:

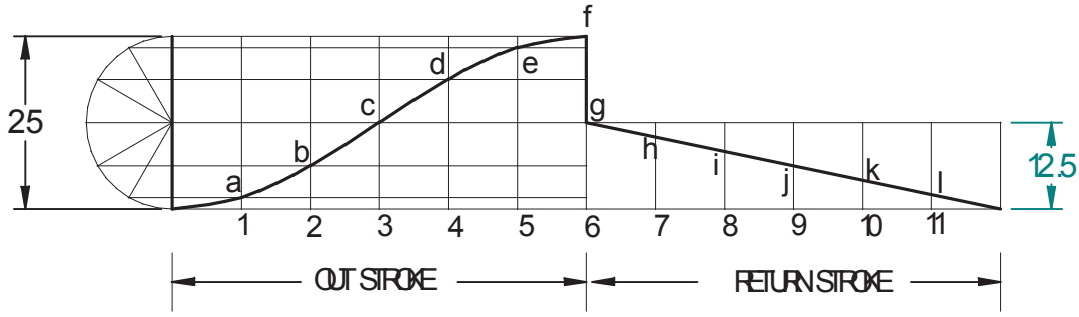

Cam profile:

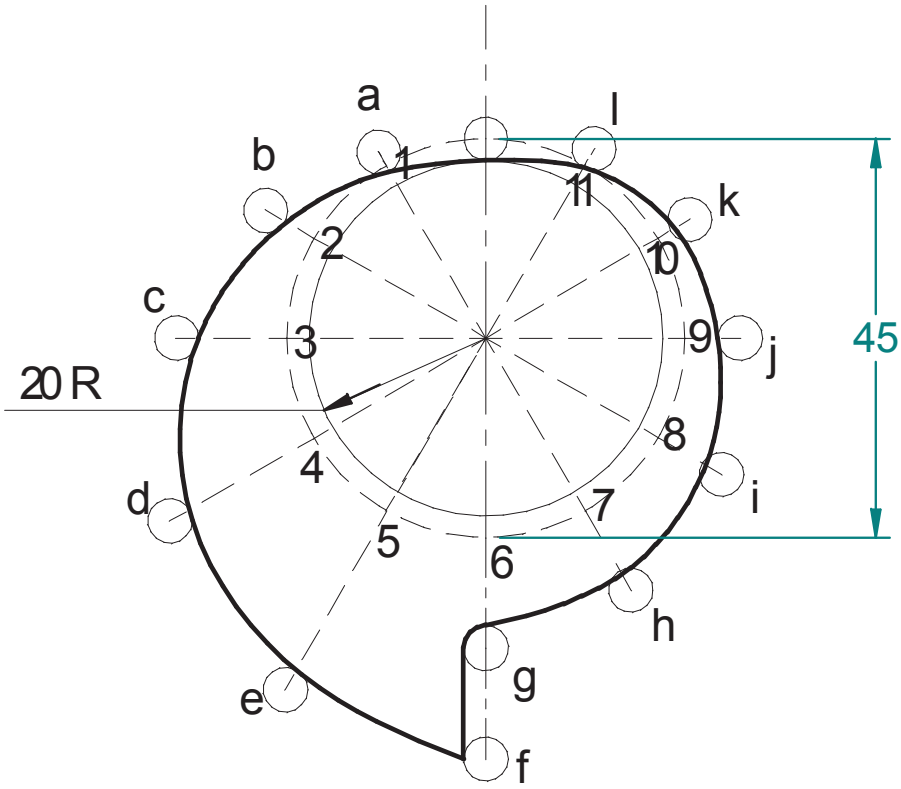

(11) Draw the cam profile for following conditions:

Follower type = roller follower, off-set to the right by 5mm; lift = 30mm; base circle radius = 25mm; roller radius = 5mm; out stroke with SHM, for 120^0 cam rotation; dwell for 60^0 cam rotation; return stroke during 120^0 cam rotation; first half of return stroke with Uniform velocity and second half with UARM; dwell for the remaining period.

Displacement diagram:

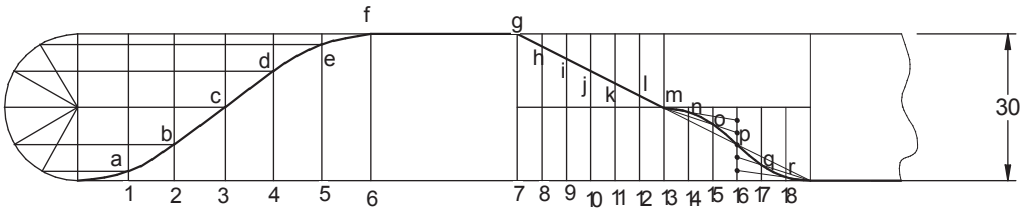

Cam profile:

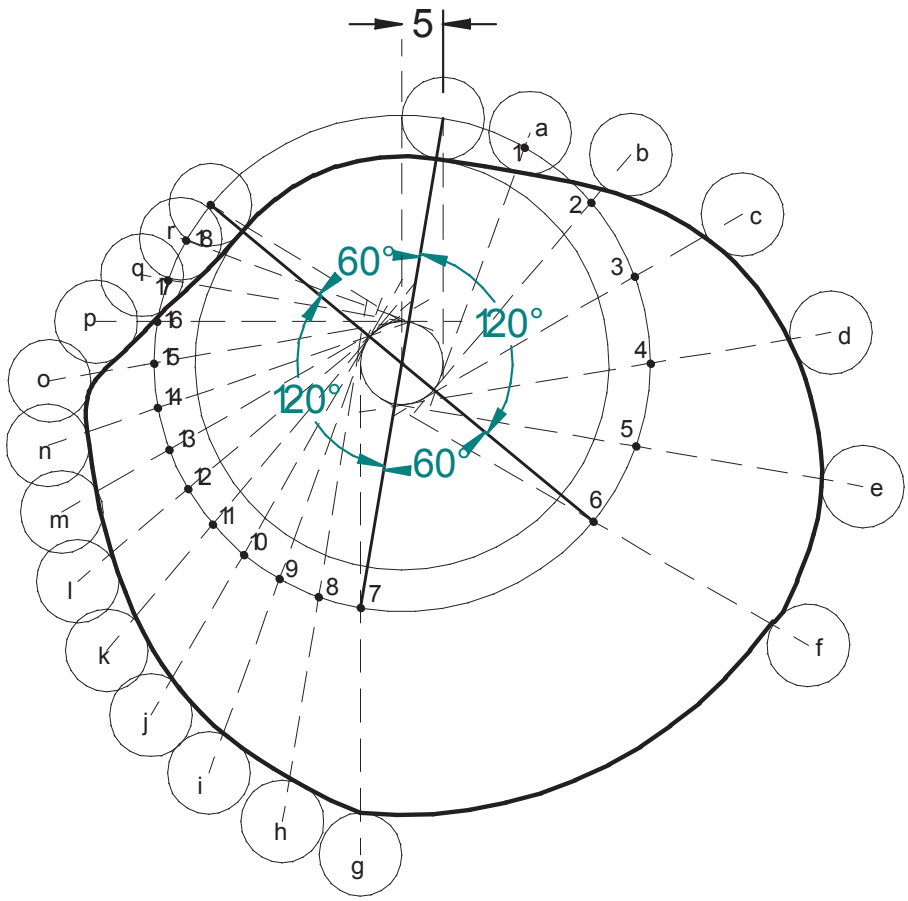

(12) A push rod of valve of an IC engine ascends with UARM, along a path inclined to the vertical at 60^0. The same descends with SHM. The base circle diameter of the cam is 50mm and the push rod has a roller of 60mm diameter, fitted to its end. The axis of the roller and the cam fall on the same vertical line. The stroke of the follower is 20mm. The angle of action for the outstroke and the return stroke is 60^0 each, interposed by a dwell period of 60^0. Draw the profile of the cam.

Displacement diagram:

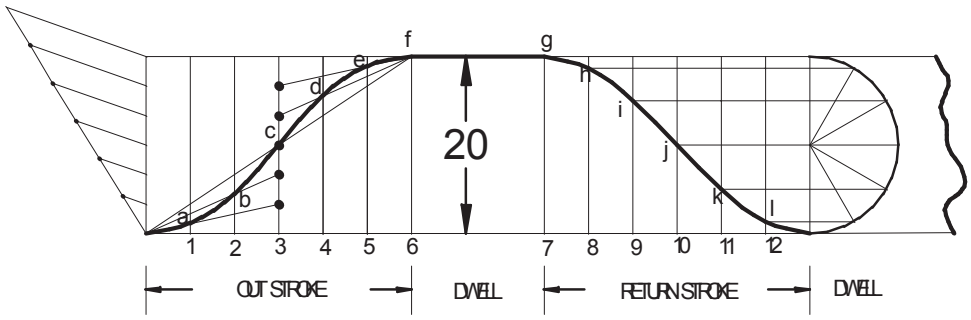
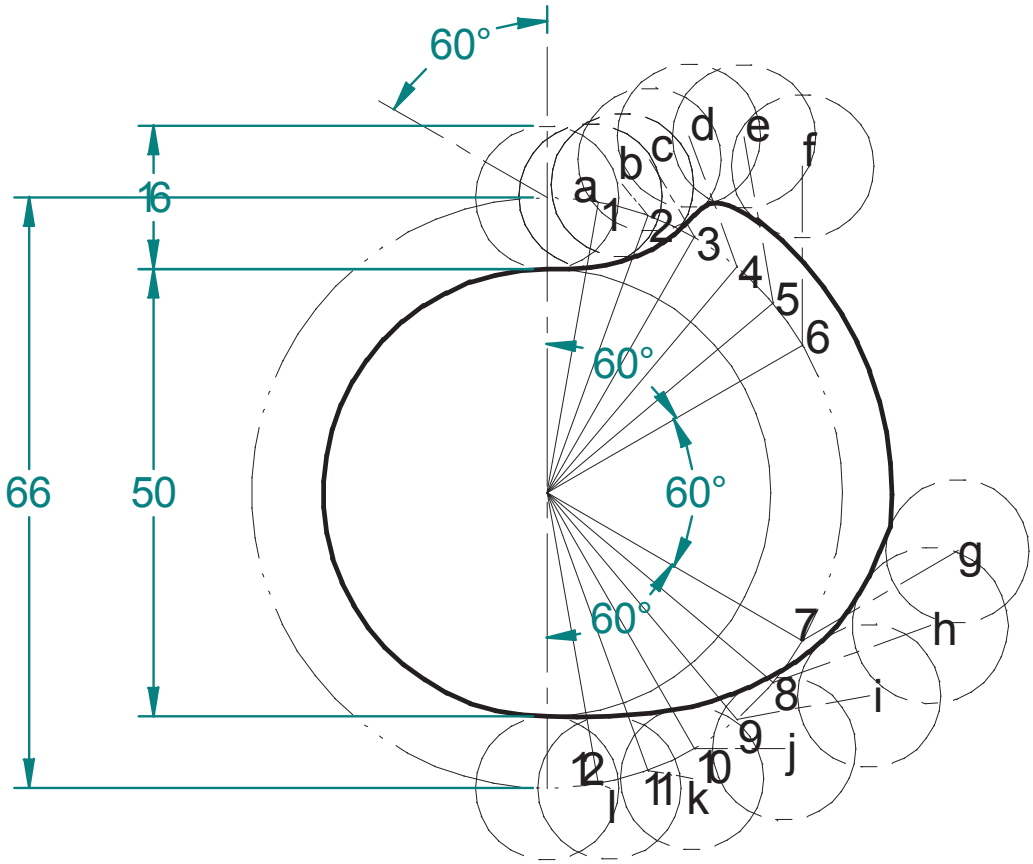
Cam profile: