© 2010 Pearson Education, Inc., Upper Saddle River, NJ. All rights reserved. This material is protected under all copyright laws as they currently exist. No portion of this material may be reproduced, in any form or by any means, without permission in writing from the publisher.

•12–1. A car starts from rest and with constant acceleration achieves a velocity of 15 m/s when it travels a distance of 200 m. Determine the acceleration of the car and the time required.

Kinematics:

$v_0 = 0, v = 15\text{ m/s}, s_0 = 0,$ and $s = 200\text{ m}.$

$(\overset{+}{\rightarrow})$ $v^2 = v_0{}^2 + 2a_c(s - s_0)$

$15^2 = 0^2 + 2a_c(200 - 0)$

$a_c = 0.5625\text{ m/s}^2$ **Ans.**

$(\overset{+}{\rightarrow})$ $v = v_0 + a_c t$

$15 = 0 + 0.5625t$

$t = 26.7\text{ s}$ **Ans.**

12–2. A train starts from rest at a station and travels with a constant acceleration of 1 m/s^2. Determine the velocity of the train when $t = 30\text{ s}$ and the distance traveled during this time.

Kinematics:

$a_c = 1\text{ m/s}^2, v_0 = 0, s_0 = 0,$ and $t = 30\text{ s}.$

$(\overset{+}{\rightarrow})$ $v = v_0 + a_c t$

$= 0 + 1(30) = 30\text{ m/s}$ **Ans.**

$(\overset{+}{\rightarrow})$ $s = s_0 + v_0 t + \frac{1}{2}a_c t^2$

$= 0 + 0 + \frac{1}{2}(1)\left(30^2\right)$

$= 450\text{ m}$ **Ans.**

© 2010 Pearson Education, Inc., Upper Saddle River, NJ. All rights reserved. This material is protected under all copyright laws as they currently exist. No portion of this material may be reproduced, in any form or by any means, without permission in writing from the publisher.

12–3. An elevator descends from rest with an acceleration of $5\,\text{ft/s}^2$ until it achieves a velocity of $15\,\text{ft/s}$. Determine the time required and the distance traveled.

Kinematics:

$a_c = 5\ \text{ft/s}^2$, $v_0 = 0$, $v = 15\ \text{ft/s}$, and $s_0 = 0$.

$(+\downarrow)$ $\quad v = v_0 + a_c t$

$15 = 0 + 5t$

$t = 3\text{s}$ **Ans.**

$(+\downarrow)$ $\quad v^2 = v_0{}^2 + 2a_c(s - s_0)$

$15^2 = 0^2 + 2(5)(s - 0)$

$s = 22.5\ \text{ft}$ **Ans.**

***12–4.** A car is traveling at $15\,\text{m/s}$, when the traffic light 50 m ahead turns yellow. Determine the required constant deceleration of the car and the time needed to stop the car at the light.

Kinematics:

$v_0 = 0$, $s_0 = 0$, $s = 50\ \text{m}$ and $v_0 = 15\ \text{m/s}$.

$(\overset{+}{\rightarrow})$ $\quad v^2 = v_0{}^2 + 2a_c(s - s_0)$

$0 = 15^2 + 2a_c(50 - 0)$

$a_c = -2.25\ \text{m/s}^2 = 2.25\ \text{m/s}^2\ \leftarrow$ **Ans.**

$(\overset{+}{\rightarrow})$ $\quad v = v_0 + a_c t$

$0 = 15 + (-2.25)t$

$t = 6.67\ \text{s}$ **Ans.**

© 2010 Pearson Education, Inc., Upper Saddle River, NJ. All rights reserved. This material is protected under all copyright laws as they currently exist. No portion of this material may be reproduced, in any form or by any means, without permission in writing from the publisher.

•12–5. A particle is moving along a straight line with the acceleration $a = (12t - 3t^{1/2})\,\text{ft/s}^2$, where t is in seconds. Determine the velocity and the position of the particle as a function of time. When $t = 0$, $v = 0$ and $s = 15\,\text{ft}$.

Velocity:

$(\overset{+}{\rightarrow})$ $$dv = a\,dt$$

$$\int_0^v dv = \int_0^t \left(12t - 3t^{1/2}\right)dt$$

$$v\Big|_0^v = \left(6t^2 - 2t^{3/2}\right)\Big|_0^t$$

$$v = \left(6t^2 - 2t^{3/2}\right)\text{ft/s}$$ **Ans.**

Position: Using this result and the initial condition $s = 15$ ft at $t = 0$ s,

$(\overset{+}{\rightarrow})$ $$ds = v\,dt$$

$$\int_{15\text{ ft}}^s ds = \int_0^t \left(6t^2 - 2t^{3/2}\right)dt$$

$$s\Big|_{15\text{ ft}}^s = \left(2t^3 - \frac{4}{5}t^{5/2}\right)\Big|_0^t$$

$$s = \left(2t^3 - \frac{4}{5}t^{5/2} + 15\right)\text{ft}$$ **Ans.**

12–6. A ball is released from the bottom of an elevator which is traveling upward with a velocity of 6 ft/s. If the ball strikes the bottom of the elevator shaft in 3 s, determine the height of the elevator from the bottom of the shaft at the instant the ball is released. Also, find the velocity of the ball when it strikes the bottom of the shaft.

Kinematics: When the ball is released, its velocity will be the same as the elevator at the instant of release. Thus, $v_0 = 6$ ft/s. Also, $t = 3$ s, $s_0 = 0$, $s = -h$, and $a_c = -32.2\,\text{ft/s}^2$.

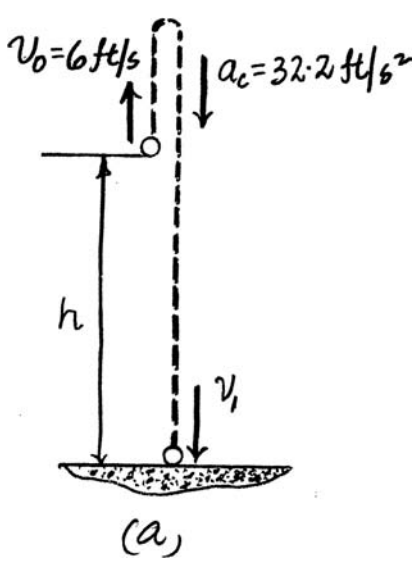

$(+\uparrow)$ $$s = s_0 + v_0 t + \frac{1}{2}a_c t^2$$

$$-h = 0 + 6(3) + \frac{1}{2}(-32.2)\left(3^2\right)$$

$$h = 127\text{ ft}$$ **Ans.**

$(+\uparrow)$ $$v = v_0 + a_c t$$

$$v = 6 + (-32.2)(3)$$

$$= -90.6\text{ ft/s} = 90.6\text{ ft/s} \downarrow$$ **Ans.**

© 2010 Pearson Education, Inc., Upper Saddle River, NJ. All rights reserved. This material is protected under all copyright laws as they currently exist. No portion of this material may be reproduced, in any form or by any means, without permission in writing from the publisher.

12–7. A car has an initial speed of 25 m/s and a constant deceleration of 3 m/s^2. Determine the velocity of the car when $t = 4$ s. What is the displacement of the car during the 4-s time interval? How much time is needed to stop the car?

$v = v_0 + a_c t$

$v = 25 + (-3)(4) = 13 \text{ m/s}$ **Ans.**

$\Delta s = s - s_0 = v_0 t + \frac{1}{2} a_c t^2$

$\Delta s = s - 0 = 25(4) + \frac{1}{2}(-3)(4)^2 = 76 \text{ m}$ **Ans.**

$v = v_0 + a_c t$

$0 = 25 + (-3)(t)$

$t = 8.33 \text{ s}$ **Ans.**

***12–8.** If a particle has an initial velocity of $v_0 = 12$ ft/s to the right, at $s_0 = 0$, determine its position when $t = 10$ s, if $a = 2$ ft/s^2 to the left.

$(\overset{+}{\rightarrow})$ $s = s_0 + v_0 t + \frac{1}{2} a_c t^2$

$= 0 + 12(10) + \frac{1}{2}(-2)(10)^2$

$= 20 \text{ ft}$ **Ans.**

•12–9. The acceleration of a particle traveling along a straight line is $a = k/v$, where k is a constant. If $s = 0$, $v = v_0$ when $t = 0$, determine the velocity of the particle as a function of time t.

Velocity:

$(\overset{+}{\rightarrow})$ $dt = \frac{dv}{a}$

$\int_0^t dt = \int_{v_0}^{v} \frac{dv}{k/v}$

$\int_0^t dt = \int_{v_0}^{v} \frac{1}{k} v dv$

$t \Big|_0^t = \frac{1}{2k} v^2 \Big|_{v_0}^{v}$

$t = \frac{1}{2k}\left(v^2 - {v_0}^2\right)$

$v = \sqrt{2kt + {v_0}^2}$ **Ans.**

© 2010 Pearson Education, Inc., Upper Saddle River, NJ. All rights reserved. This material is protected under all copyright laws as they currently exist. No portion of this material may be reproduced, in any form or by any means, without permission in writing from the publisher.

12–10. Car A starts from rest at $t = 0$ and travels along a straight road with a constant acceleration of 6 ft/s^2 until it reaches a speed of 80 ft/s. Afterwards it maintains this speed. Also, when $t = 0$, car B located 6000 ft down the road is traveling towards A at a constant speed of 60 ft/s. Determine the distance traveled by car A when they pass each other.

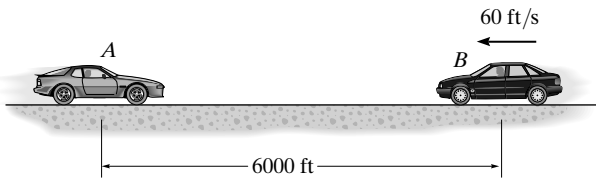

Distance Traveled: Time for car A to achives $v = 80$ ft/s can be obtained by applying Eq. 12–4.

$(\overset{+}{\rightarrow})$
$$v = v_0 + a_c t$$
$$80 = 0 + 6t$$
$$t = 13.33 \text{ s}$$

The distance car A travels for this part of motion can be determined by applying Eq. 12–6.

$(\overset{+}{\rightarrow})$
$$v^2 = v_0^2 + 2a_c(s - s_0)$$
$$80^2 = 0 + 2(6)(s_1 - 0)$$
$$s_1 = 533.33 \text{ ft}$$

For the second part of motion, car A travels with a constant velocity of $v = 80$ ft/s and the distance traveled in $t' = (t_1 - 13.33)$ s (t_1 is the total time) is

$(\overset{+}{\rightarrow})$
$$s_2 = vt' = 80(t_1 - 13.33)$$

Car B travels in the opposite direction with a constant velocity of $v = 60$ ft/s and the distance traveled in t_1 is

$(\overset{+}{\rightarrow})$
$$s_3 = vt_1 = 60t_1$$

It is required that

$$s_1 + s_2 + s_3 = 6000$$
$$533.33 + 80(t_1 - 13.33) + 60t_1 = 6000$$
$$t_1 = 46.67 \text{ s}$$

The distance traveled by car A is

$$s_A = s_1 + s_2 = 533.33 + 80(46.67 - 13.33) = 3200 \text{ ft} \qquad \textbf{Ans.}$$

© 2010 Pearson Education, Inc., Upper Saddle River, NJ. All rights reserved. This material is protected under all copyright laws as they currently exist. No portion of this material may be reproduced, in any form or by any means, without permission in writing from the publisher.

12–11. A particle travels along a straight line with a velocity $v = (12 - 3t^2)$ m/s, where t is in seconds. When $t = 1$ s, the particle is located 10 m to the left of the origin. Determine the acceleration when $t = 4$ s, the displacement from $t = 0$ to $t = 10$ s, and the distance the particle travels during this time period.

$v = 12 - 3t^2$ **(1)**

$a = \frac{dv}{dt} = -6t\Big|_{t=4} = -24 \text{ m/s}^2$ **Ans.**

$\int_{-10}^{s} ds = \int_{1}^{t} v\,dt = \int_{1}^{t} \left(12 - 3t^2\right)dt$

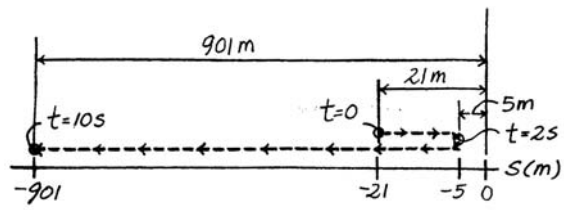

$s + 10 = 12t - t^3 - 11$

$s = 12t - t^3 - 21$

$s|_{t=0} = -21$

$s|_{t=10} = -901$

$\Delta s = -901 - (-21) = -880$ m **Ans.**

From Eq. (1):

$v = 0$ when $t = 2s$

$s|_{t=2} = 12(2) - (2)^3 - 21 = -5$

$s_T = (21 - 5) + (901 - 5) = 912$ m **Ans.**

© 2010 Pearson Education, Inc., Upper Saddle River, NJ. All rights reserved. This material is protected under all copyright laws as they currently exist. No portion of this material may be reproduced, in any form or by any means, without permission in writing from the publisher.

***12–12.** A sphere is fired downwards into a medium with an initial speed of 27 m/s. If it experiences a deceleration of $a = (-6t)\ \text{m/s}^2$, where t is in seconds, determine the distance traveled before it stops.

Velocity: $v_0 = 27$ m/s at $t_0 = 0$ s. Applying Eq. 12–2, we have

$(+\downarrow)$

$$dv = adt$$

$$\int_{27}^{v} dv = \int_0^t -6t\,dt$$

$$v = \left(27 - 3t^2\right)\ \text{m/s} \qquad \textbf{[1]}$$

At $v = 0$, from Eq.[1]

$$0 = 27 - 3t^2 \qquad t = 3.00\ \text{s}$$

Distance Traveled: $s_0 = 0$ m at $t_0 = 0$ s. Using the result $v = 27 - 3t^2$ and applying Eq. 12–1, we have

$(+\downarrow)$

$$ds = vdt$$

$$\int_0^s ds = \int_0^t \left(27 - 3t^2\right) dt$$

$$s = \left(27t - t^3\right)\ \text{m} \qquad \textbf{[2]}$$

At $t = 3.00$ s, from Eq. [2]

$$s = 27(3.00) - 3.00^3 = 54.0\ \text{m} \qquad \textbf{Ans.}$$

•12–13. A particle travels along a straight line such that in 2 s it moves from an initial position $s_A = +0.5$ m to a position $s_B = -1.5$ m. Then in another 4 s it moves from s_B to $s_C = +2.5$ m. Determine the particle's average velocity and average speed during the 6-s time interval.

$$\Delta s = (s_C - s_A) = 2\ \text{m}$$

$$s_T = (0.5 + 1.5 + 1.5 + 2.5) = 6\ \text{m}$$

$$t = (2 + 4) = 6\ \text{s}$$

$$v_{avg} = \frac{\Delta s}{t} = \frac{2}{6} = 0.333\ \text{m/s} \qquad \textbf{Ans.}$$

$$(v_{sp})_{avg} = \frac{s_T}{t} = \frac{6}{6} = 1\ \text{m/s} \qquad \textbf{Ans.}$$

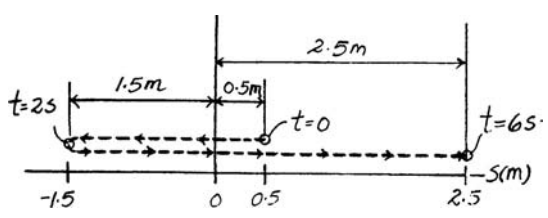

© 2010 Pearson Education, Inc., Upper Saddle River, NJ. All rights reserved. This material is protected under all copyright laws as they currently exist. No portion of this material may be reproduced, in any form or by any means, without permission in writing from the publisher.

12–14. A particle travels along a straight-line path such that in 4 s it moves from an initial position $s_A = -8$ m to a position $s_B = +3$ m. Then in another 5 s it moves from s_B to $s_C = -6$ m. Determine the particle's average velocity and average speed during the 9-s time interval.

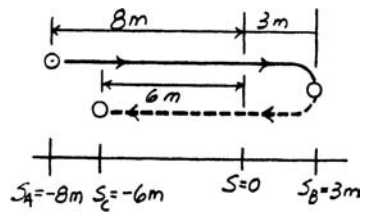

Average Velocity: The displacement from A to C is $\Delta s = s_C - S_A = -6 - (-8) = 2$ m.

$$v_{avg} = \frac{\Delta s}{\Delta t} = \frac{2}{4 + 5} = 0.222 \text{ m/s} \qquad \textbf{Ans.}$$

Average Speed: The distances traveled from A to B and B to C are $s_{A \to B} = 8 + 3 = 11.0$ m and $s_{B \to C} = 3 + 6 = 9.00$ m, respectively. Then, the total distance traveled is $s_{Tot} = s_{A \to B} + s_{B \to C} = 11.0 - 9.00 = 20.0$ m.

$$(v_{sp})_{avg} = \frac{s_{Tot}}{\Delta t} = \frac{20.0}{4 + 5} = 2.22 \text{ m/s} \qquad \textbf{Ans.}$$

12–15. Tests reveal that a normal driver takes about 0.75 s before he or she can *react* to a situation to avoid a collision. It takes about 3 s for a driver having 0.1% alcohol in his system to do the same. If such drivers are traveling on a straight road at 30 mph (44 ft/s) and their cars can decelerate at 2 ft/s^2, determine the shortest stopping distance d for each from the moment they see the pedestrians. *Moral*: If you must drink, please don't drive!

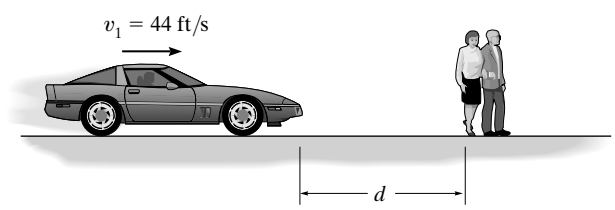

Stopping Distance: For normal driver, the car moves a distance of $d' = vt = 44(0.75) = 33.0$ ft before he or she reacts and decelerates the car. The stopping distance can be obtained using Eq. 12–6 with $s_0 = d' = 33.0$ ft and $v = 0$.

$(\overset{+}{\rightarrow})$ $$v^2 = v_0^2 + 2a_c(s - s_0)$$

$$0^2 = 44^2 + 2(-2)(d - 33.0)$$

$$d = 517 \text{ ft} \qquad \textbf{Ans.}$$

For a drunk driver, the car moves a distance of $d' = vt = 44(3) = 132$ ft before he or she reacts and decelerates the car. The stopping distance can be obtained using Eq. 12–6 with $s_0 = d' = 132$ ft and $v = 0$.

$(\overset{+}{\rightarrow})$ $$v^2 = v_0^2 + 2a_c(s - s_0)$$

$$0^2 = 44^2 + 2(-2)(d - 132)$$

$$d = 616 \text{ ft} \qquad \textbf{Ans.}$$

© 2010 Pearson Education, Inc., Upper Saddle River, NJ. All rights reserved. This material is protected under all copyright laws as they currently exist. No portion of this material may be reproduced, in any form or by any means, without permission in writing from the publisher.

***12–16.** As a train accelerates uniformly it passes successive kilometer marks while traveling at velocities of 2 m/s and then 10 m/s. Determine the train's velocity when it passes the next kilometer mark and the time it takes to travel the 2-km distance.

Kinematics: For the first kilometer of the journey, $v_0 = 2$ m/s, $v = 10$ m/s, $s_0 = 0$, and $s = 1000$ m. Thus,

$(\overset{+}{\rightarrow})$ $$v^2 = v_0{}^2 + 2a_c(s - s_0)$$

$$10^2 = 2^2 + 2a_c(1000 - 0)$$

$$a_c = 0.048 \text{ m/s}^2$$

For the second kilometer, $v_0 = 10$ m/s, $s_0 = 1000$ m, $s = 2000$ m, and 0.048 m/s^2. Thus,

$(\overset{+}{\rightarrow})$ $$v^2 = v_0{}^2 + 2a_c(s - s_0)$$

$$v^2 = 10^2 + 2(0.048)(2000 - 1000)$$

$$v = 14 \text{ m/s} \qquad \textbf{Ans.}$$

For the whole journey, $v_0 = 2$ m/s, $v = 14$ m/s, and 0.048 m/s^2. Thus,

$(\overset{+}{\rightarrow})$ $$v = v_0 + a_c t$$

$$14 = 2 + 0.048t$$

$$t = 250 \text{ s} \qquad \textbf{Ans.}$$

•12–17. A ball is thrown with an upward velocity of 5 m/s from the top of a 10-m high building. One second later another ball is thrown vertically from the ground with a velocity of 10 m/s. Determine the height from the ground where the two balls pass each other.

Kinematics: First, we will consider the motion of ball A with $(v_A)_0 = 5$ m/s, $(s_A)_0 = 0$, $s_A = (h - 10)$ m, $t_A = t'$, and $a_c = -9.81$ m/s^2. Thus,

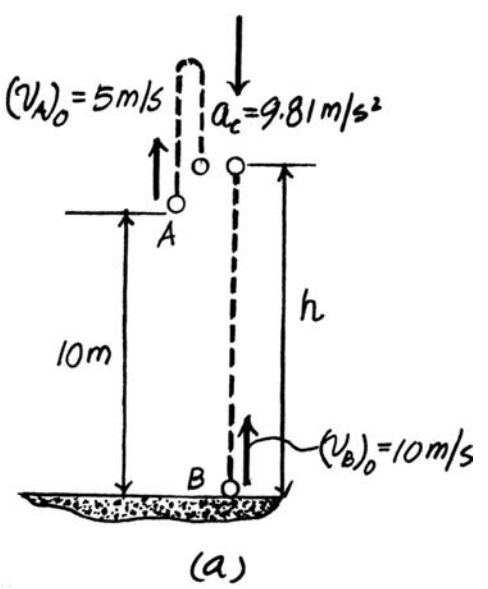

(a)

$(+\uparrow)$ $$s_A = (s_A)_0 + (v_A)_0 t_A + \frac{1}{2} a_c t_A{}^2$$

$$h - 10 = 0 + 5t' + \frac{1}{2}(-9.81)(t')^2$$

$$h = 5t' - 4.905(t')^2 + 10 \qquad \textbf{(1)}$$

Motion of ball B is with $(v_B)_0 = 10$ m/s, $(s_B)_0 = 0$, $s_B = h$, $t_B = t' - 1$ and $a_c = -9.81$ m/s^2. Thus,

$(+\uparrow)$ $$s_B = (s_B)_0 + (v_B)_0 t_B + \frac{1}{2} a_c t_B{}^2$$

$$h = 0 + 10(t' - 1) + \frac{1}{2}(-9.81)(t' - 1)^2$$

$$h = 19.81t' - 4.905(t')^2 - 14.905 \qquad \textbf{(2)}$$

Solving Eqs. (1) and (2) yields

$$h = 4.54 \text{ m} \qquad \textbf{Ans.}$$

$$t' = 1.68 \text{ m}$$

© 2010 Pearson Education, Inc., Upper Saddle River, NJ. All rights reserved. This material is protected under all copyright laws as they currently exist. No portion of this material may be reproduced, in any form or by any means, without permission in writing from the publisher.

12–18. A car starts from rest and moves with a constant acceleration of 1.5 m/s^2 until it achieves a velocity of 25 m/s. It then travels with constant velocity for 60 seconds. Determine the average speed and the total distance traveled.

Kinematics: For stage (1) of the motion, $v_0 = 0$, $s_0 = 0$, $v = 25$ m/s, and $a_c = 1.5$ m/s^2.

$(\overset{+}{\rightarrow})$ $v = v_0 + a_c t$

$25 = 0 + 1.5t_1$

$t_1 = 16.67$ s

$(\overset{+}{\rightarrow})$ $v^2 = v_0{}^2 + 2a_c(s - s_0)$

$25^2 = 0 + 2(1.5)(s_1 - 0)$

$s_1 = 208.33$ m

For stage (2) of the motion, $s_0 = 108.22$ ft, $v_0 = 25$ ft/s, $t = 60$ s, and $a_c = 0$. Thus,

$(\overset{+}{\rightarrow})$ $s = s_0 + v_0 t + \frac{1}{2} a_c t^2$

$s = 208.33 + 25(60) + 0$

$= 1708.33\text{ft} = 1708$ m **Ans.**

The average speed of the car is then

$$v_{avg} = \frac{s}{t_1 + t_2} = \frac{1708.33}{16.67 + 60} = 22.3 \text{ m/s}$$ **Ans.**

12–19. A car is to be hoisted by elevator to the fourth floor of a parking garage, which is 48 ft above the ground. If the elevator can accelerate at 0.6 ft/s^2, decelerate at 0.3 ft/s^2, and reach a maximum speed of 8 ft/s, determine the shortest time to make the lift, starting from rest and ending at rest.

$+\uparrow$ $v^2 = v_0^2 + 2\,a_c\,(s - s_0)$

$v_{max}^2 = 0 + 2(0.6)(y - 0)$

$0 = v_{max}^2 + 2(-0.3)(48 - y)$

$0 = 1.2\,y - 0.6(48 - y)$

$y = 16.0$ ft, $v_{max} = 4.382$ ft/s < 8 ft/s

$+\uparrow$ $v = v_0 + a_c\,t$

$4.382 = 0 + 0.6\,t_1$

$t_1 = 7.303$ s

$0 = 4.382 - 0.3\,t_2$

$t_2 = 14.61$ s

$t = t_1 + t_2 = 21.9$ s **Ans.**

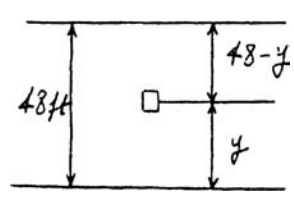

© 2010 Pearson Education, Inc., Upper Saddle River, NJ. All rights reserved. This material is protected under all copyright laws as they currently exist. No portion of this material may be reproduced, in any form or by any means, without permission in writing from the publisher.

***12–20.** A particle is moving along a straight line such that its speed is defined as $v = (-4s^2)$ m/s, where s is in meters. If $s = 2$ m when $t = 0$, determine the velocity and acceleration as functions of time.

$$v = -4s^2$$

$$\frac{ds}{dt} = -4s^2$$

$$\int_2^s s^{-2}\,ds = \int_0^t -4\,dt$$

$$-s^{-1}\Big|_2^s = -4t\Big|_0^t$$

$$t = \frac{1}{4}(s^{-1} - 0.5)$$

$$s = \frac{2}{8t + 1}$$

$$v = -4\left(\frac{2}{8t + 1}\right)^2 = \left(-\frac{16}{(8t + 1)^2}\right)\text{ m/s} \qquad \textbf{Ans.}$$

$$a = \frac{dv}{dt} = \frac{16(2)(8t + 1)(8)}{(8t + 1)^4} = \left(\frac{256}{(8t + 1)^3}\right)\text{ m/s}^2 \qquad \textbf{Ans.}$$

© 2010 Pearson Education, Inc., Upper Saddle River, NJ. All rights reserved. This material is protected under all copyright laws as they currently exist. No portion of this material may be reproduced, in any form or by any means, without permission in writing from the publisher.

•12–21. Two particles A and B start from rest at the origin $s = 0$ and move along a straight line such that $a_A = (6t - 3)\ \text{ft/s}^2$ and $a_B = (12t^2 - 8)\ \text{ft/s}^2$, where t is in seconds. Determine the distance between them when $t = 4$ s and the total distance each has traveled in $t = 4$ s.

Velocity: The velocity of particles A and B can be determined using Eq. 12-2.

$$dv_A = a_A dt$$

$$\int_0^{v_A} dv_A = \int_0^t (6t - 3)dt$$

$$v_A = 3t^2 - 3t$$

$$dv_B = a_B dt$$

$$\int_0^{v_B} dv_B = \int_0^t (12t^2 - 8)dt$$

$$v_B = 4t^3 - 8t$$

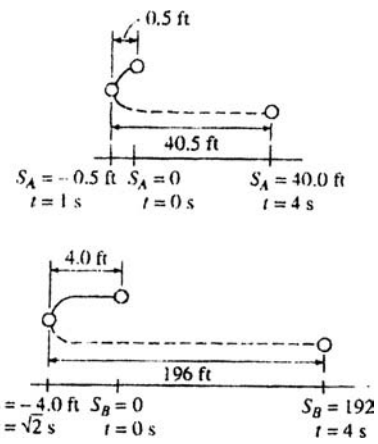

The times when particle A stops are

$3t^2 - 3t = 0 \qquad t = 0$ s and $= 1$ s

The times when particle B stops are

$4t^3 - 8t = 0 \quad t = 0$ s and $t = \sqrt{2}$ s

Position: The position of particles A and B can be determined using Eq. 12-1.

$$ds_A = v_A dt$$

$$\int_0^{s_A} ds_A = \int_0^t (3t^2 - 3t)dt$$

$$s_A = t^3 - \frac{3}{2}t^2$$

$$ds_B = v_B dt$$

$$\int_0^{s_B} ds_B = \int_0^t (4t^3 - 8t)dt$$

$$s_B = t^4 - 4t^2$$

The positions of particle A at $t = 1$ s and 4 s are

$$s_A\big|_{t=1\,s} = 1^3 - \frac{3}{2}(1^2) = -0.500 \text{ ft}$$

$$s_A\big|_{t=4\,s} = 4^3 - \frac{3}{2}(4^2) = 40.0 \text{ ft}$$

Particle A has traveled

$$d_A = 2(0.5) + 40.0 = 41.0 \text{ ft} \qquad \textbf{Ans.}$$

The positions of particle B at $t = \sqrt{2}$ s and 4 s are

$$s_B\big|_{t=\sqrt{2}} = (\sqrt{2})^4 - 4(\sqrt{2})^2 = -4 \text{ ft}$$

$$s_B\big|_{t=4} = (4)^4 - 4(4)^2 = 192 \text{ ft}$$

Particle B has traveled

$$d_B = 2(4) + 192 = 200 \text{ ft} \qquad \textbf{Ans.}$$

At $t = 4$ s the distance beween A and B is

$$\Delta s_{AB} = 192 - 40 = 152 \text{ ft} \qquad \textbf{Ans.}$$

© 2010 Pearson Education, Inc., Upper Saddle River, NJ. All rights reserved. This material is protected under all copyright laws as they currently exist. No portion of this material may be reproduced, in any form or by any means, without permission in writing from the publisher.

12–22. A particle moving along a straight line is subjected to a deceleration $a = (-2v^3)\ \text{m/s}^2$, where v is in m/s. If it has a velocity $v = 8$ m/s and a position $s = 10$ m when $t = 0$, determine its velocity and position when $t = 4$ s.

Velocity: The velocity of the particle can be related to its position by applying Eq. 12–3.

$$ds = \frac{v\,dv}{a}$$

$$\int_{10\text{m}}^{s} ds = \int_{8\text{m/s}}^{v} -\frac{dv}{2v^2}$$

$$s - 10 = \frac{1}{2v} - \frac{1}{16}$$

$$v = \frac{8}{16s - 159} \qquad \textbf{[1]}$$

Position: The position of the particle can be related to the time by applying Eq. 12–1.

$$dt = \frac{ds}{v}$$

$$\int_{0}^{t} dt = \int_{10\text{m}}^{s} \frac{1}{8}(16s - 159)\,ds$$

$$8t = 8s^2 - 159s + 790$$

When $t = 4$ s,

$$8(4) = 8s^2 - 159s + 790$$

$$8s^2 - 159s + 758 = 0$$

Choose the root greater than 10 m $s = 11.94\ \text{m} = 11.9\ \text{m}$ **Ans.**

Substitute $s = 11.94$ m into Eq. [1] yields

$$v = \frac{8}{16(11.94) - 159} = 0.250\ \text{m/s} \qquad \textbf{Ans.}$$

© 2010 Pearson Education, Inc., Upper Saddle River, NJ. All rights reserved. This material is protected under all copyright laws as they currently exist. No portion of this material may be reproduced, in any form or by any means, without permission in writing from the publisher.

12–23. A particle is moving along a straight line such that its acceleration is defined as $a = (-2v)\ \text{m/s}^2$, where v is in meters per second. If $v = 20\ \text{m/s}$ when $s = 0$ and $t = 0$, determine the particle's position, velocity, and acceleration as functions of time.

$$a = -2v$$

$$\frac{dv}{dt} = -2v$$

$$\int_{20}^{v} \frac{dv}{v} = \int_{0}^{t} -2\,dt$$

$$\ln \frac{v}{20} = -2t$$

$$v = (20e^{-2t})\text{m/s} \qquad \textbf{Ans.}$$

$$a = \frac{dv}{dt} = (-40e^{-2t})\text{m/s}^2 \qquad \textbf{Ans.}$$

$$\int_{0}^{s} ds = \int_{0}^{t} v\,dt = \int_{0}^{t} (20e^{-2t})dt$$

$$s = -10e^{-2t}\big|_0^t = -10(e^{-2t} - 1)$$

$$s = 10(1 - e^{-2t})\text{m} \qquad \textbf{Ans.}$$

© 2010 Pearson Education, Inc., Upper Saddle River, NJ. All rights reserved. This material is protected under all copyright laws as they currently exist. No portion of this material may be reproduced, in any form or by any means, without permission in writing from the publisher.

***12–24.** A particle starts from rest and travels along a straight line with an acceleration $a = (30 - 0.2v)\ \text{ft/s}^2$, where v is in ft/s. Determine the time when the velocity of the particle is $v = 30$ ft/s.

Velocity:

$(\overset{+}{\rightarrow})$ $$dt = \frac{dv}{a}$$

$$\int_0^t dt = \int_0^v \frac{dv}{30 - 0.2v}$$

$$t\Big|_0^t = -\frac{1}{0.2}\ln(30 - 0.2v)\Big|_0^v$$

$$t = 5\ln\frac{30}{30 - 0.2v}$$

$$t = 5\ln\frac{30}{30 - 0.2(50)} = 1.12\ \text{s}$$ **Ans.**

•12–25. When a particle is projected vertically upwards with an initial velocity of v_0, it experiences an acceleration $a = -(g + kv^2)$, where g is the acceleration due to gravity, k is a constant and v is the velocity of the particle. Determine the maximum height reached by the particle.

Position:

$(+\uparrow)$ $$ds = \frac{v\,dv}{a}$$

$$\int_0^s ds = \int_{v_0}^v -\frac{vdv}{g + kv^2}$$

$$s\Big|_0^s = -\left[\frac{1}{2k}\ln\left(g + kv^2\right)\right]\Bigg|_{v_0}^v$$

$$s = \frac{1}{2k}\ln\left(\frac{g + kv_0{}^2}{g + kv^2}\right)$$

The particle achieves its maximum height when $v = 0$. Thus,

$$h_{\max} = \frac{1}{2k}\ln\left(\frac{g + kv_0{}^2}{g}\right)$$

$$= \frac{1}{2k}\ln\left(1 + \frac{k}{g}v_0{}^2\right)$$ **Ans.**

© 2010 Pearson Education, Inc., Upper Saddle River, NJ. All rights reserved. This material is protected under all copyright laws as they currently exist. No portion of this material may be reproduced, in any form or by any means, without permission in writing from the publisher.

12–26. The acceleration of a particle traveling along a straight line is $a = (0.02e^t)\ \text{m/s}^2$, where t is in seconds. If $v = 0$, $s = 0$ when $t = 0$, determine the velocity and acceleration of the particle at $s = 4$ m.

Velocity: $a = 0.02e^{5.329} = 4.13\ \text{m/s}^2$ **Ans.**

$(\overset{+}{\rightarrow})$ $dv = a\,dt$

$$\int_0^v dv = \int_0^t 0.02e^t\,dt$$

$$v\Big|_0^v = 0.02e^t\Big|_0^t$$

$$v = \left[0.02\left(e^t - 1\right)\right]\ \text{m/s}$$ **(1)**

Position:

$(\overset{+}{\rightarrow})$ $ds = v\,dt$

$$\int_0^s ds = \int_0^t 0.02\left(e^t - 1\right)dt$$

$$s\Big|_0^s = 0.02\left(e^t - t\right)\Big|_0^t$$

$$s = 0.02\left(e^t - t - 1\right)\ \text{m}$$

When $s = 4$ m,

$$4 = 0.02\left(e^t - t - 1\right)$$

$$e^t - t - 201 = 0$$

Solving the above equation by trial and error,

$$t = 5.329\ \text{s}$$

Thus, the velocity and acceleration when $s = 4$ m ($t = 5.329$ s) are

$$v = 0.02\left(e^{5.329} - 1\right) = 4.11\ \text{m/s}$$ **Ans.**

$$a = 0.02e^{5.329} = 4.13\ \text{m/s}^2$$ **Ans.**

12–27. A particle moves along a straight line with an acceleration of $a = 5/(3s^{1/3} + s^{5/2})\ \text{m/s}^2$, where s is in meters. Determine the particle's velocity when $s = 2$ m, if it starts from rest when $s = 1$ m. Use Simpson's rule to evaluate the integral.

$$a = \frac{5}{\left(3s^{\frac{1}{3}} + s^{\frac{5}{2}}\right)}$$

$$a\,ds = v\,dv$$

$$\int_1^2 \frac{5\,ds}{\left(3s^{\frac{1}{3}} + s^{\frac{5}{2}}\right)} = \int_0^v v\,dv$$

$$0.8351 = \frac{1}{2}v^2$$

$$v = 1.29\ \text{m/s}$$ **Ans.**

© 2010 Pearson Education, Inc., Upper Saddle River, NJ. All rights reserved. This material is protected under all copyright laws as they currently exist. No portion of this material may be reproduced, in any form or by any means, without permission in writing from the publisher.

***12–28.** If the effects of atmospheric resistance are accounted for, a falling body has an acceleration defined by the equation $a = 9.81[1 - v^2(10^{-4})]$ m/s^2, where v is in m/s and the positive direction is downward. If the body is released from rest at a very *high altitude*, determine (a) the velocity when $t = 5$ s, and (b) the body's terminal or maximum attainable velocity (as $t \to \infty$).

Velocity: The velocity of the particle can be related to the time by applying Eq. 12–2.

$(+\downarrow)$
$$dt = \frac{dv}{a}$$

$$\int_0^t dt = \int_0^v \frac{dv}{9.81[1 - (0.01v)^2]}$$

$$t = \frac{1}{9.81}\left[\int_0^v \frac{dv}{2(1 + 0.01v)} + \int_0^v \frac{dv}{2(1 - 0.01v)}\right]$$

$$9.81t = 50\ln\left(\frac{1 + 0.01v}{1 - 0.01v}\right)$$

$$v = \frac{100(e^{0.1962t} - 1)}{e^{0.1962t} + 1} \qquad \textbf{[1]}$$

a) When $t = 5$ s, then, from Eq. [1]

$$v = \frac{100[e^{0.1962(5)} - 1]}{e^{0.1962(5)} + 1} = 45.5 \text{ m/s} \qquad \textbf{Ans.}$$

b) If $t \to \infty$, $\dfrac{e^{0.1962t} - 1}{e^{0.1962t} + 1} \to 1$. Then, from Eq. [1]

$$v_{max} = 100 \text{ m/s} \qquad \textbf{Ans.}$$

© 2010 Pearson Education, Inc., Upper Saddle River, NJ. All rights reserved. This material is protected under all copyright laws as they currently exist. No portion of this material may be reproduced, in any form or by any means, without permission in writing from the publisher.

•12–29. The position of a particle along a straight line is given by $s = (1.5t^3 - 13.5t^2 + 22.5t)$ ft, where t is in seconds. Determine the position of the particle when $t = 6$ s and the total distance it travels during the 6-s time interval. *Hint:* Plot the path to determine the total distance traveled.

Position: The position of the particle when $t = 6$ s is

$$s\big|_{t=6s} = 1.5(6^3) - 13.5(6^2) + 22.5(6) = -27.0 \text{ ft} \qquad \textbf{Ans.}$$

Total Distance Traveled: The velocity of the particle can be determined by applying Eq. 12–1.

$$v = \frac{ds}{dt} = 4.50t^2 - 27.0t + 22.5$$

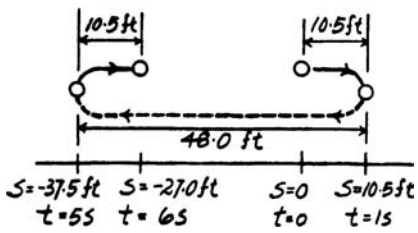

The times when the particle stops are

$$4.50t^2 - 27.0t + 22.5 = 0$$

$$t = 1 \text{ s} \qquad \text{and} \qquad t = 5 \text{ s}$$

The position of the particle at $t = 0$ s, 1 s and 5 s are

$$s\big|_{t=0s} = 1.5(0^3) - 13.5(0^2) + 22.5(0) = 0$$

$$s\big|_{t=1s} = 1.5(1^3) - 13.5(1^2) + 22.5(1) = 10.5 \text{ ft}$$

$$s\big|_{t=5s} = 1.5(5^3) - 13.5(5^2) + 22.5(5) = -37.5 \text{ ft}$$

From the particle's path, the total distance is

$$s_{tot} = 10.5 + 48.0 + 10.5 = 69.0 \text{ ft} \qquad \textbf{Ans.}$$

© 2010 Pearson Education, Inc., Upper Saddle River, NJ. All rights reserved. This material is protected under all copyright laws as they currently exist. No portion of this material may be reproduced, in any form or by any means, without permission in writing from the publisher.

12–30. The velocity of a particle traveling along a straight line is $v = v_0 - ks$, where k is constant. If $s = 0$ when $t = 0$, determine the position and acceleration of the particle as a function of time.

Position:

$(\overset{+}{\rightarrow})$

$$dt = \frac{ds}{v}$$

$$\int_0^t dt = \int_0^s \frac{ds}{v_0 - ks}$$

$$t\Big|_0^t = -\frac{1}{k}\ln(v_0 - ks)\Big|_0^s$$

$$t = \frac{1}{k}\ln\left(\frac{v_0}{v_0 - ks}\right)$$

$$e^{kt} = \frac{v_0}{v_0 - ks}$$

$$s = \frac{v_0}{k}\left(1 - e^{-kt}\right) \qquad \textbf{Ans.}$$

Velocity:

$$v = \frac{ds}{dt} = \frac{d}{dt}\left[\frac{v_0}{k}\left(1 - e^{-kt}\right)\right]$$

$$v = v_0 e^{-kt}$$

Acceleration:

$$a = \frac{dv}{dt} = \frac{d}{dt}\left(v_0 e^{-kt}\right)$$

$$a = -kv_0 e^{-kt} \qquad \textbf{Ans.}$$

12–31. The acceleration of a particle as it moves along a straight line is given by $a = (2t - 1)\ \text{m/s}^2$, where t is in seconds. If $s = 1$ m and $v = 2$ m/s when $t = 0$, determine the particle's velocity and position when $t = 6$ s. Also, determine the total distance the particle travels during this time period.

$$\int_2^v dv = \int_0^t (2t - 1)\,dt$$

$$v = t^2 - t + 2$$

$$\int_1^s ds = \int_0^t (t^2 - t + 2)\,dt$$

$$s = \frac{1}{3}t^3 - \frac{1}{2}t^2 + 2t + 1$$

When $t = 6$ s,

$$v = 32\ \text{m/s} \qquad \textbf{Ans.}$$

$$s = 67\ \text{m} \qquad \textbf{Ans.}$$

Since $v \neq 0$ then

$$d = 67 - 1 = 66\ \text{m} \qquad \textbf{Ans.}$$

© 2010 Pearson Education, Inc., Upper Saddle River, NJ. All rights reserved. This material is protected under all copyright laws as they currently exist. No portion of this material may be reproduced, in any form or by any means, without permission in writing from the publisher.

***12–32.** Ball A is thrown vertically upward from the top of a 30-m-high-building with an initial velocity of 5 m/s. At the same instant another ball B is thrown upward from the ground with an initial velocity of 20 m/s. Determine the height from the ground and the time at which they pass.

Origin at roof:

Ball A:

$$(+\uparrow) \qquad s = s_0 + v_0 t + \frac{1}{2} a_c t^2$$

$$-s = 0 + 5t - \frac{1}{2}(9.81)t^2$$

Ball B:

$$(+\uparrow) \qquad s = s_0 + v_0 t + \frac{1}{2} a_c t^2$$

$$-s = -30 + 20t - \frac{1}{2}(9.81)t^2$$

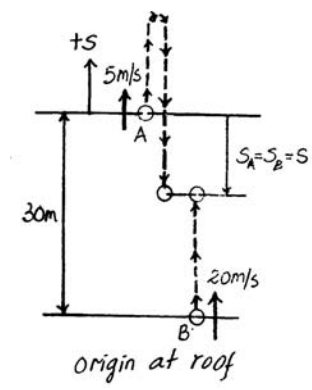

Solving,

$t = 2$ s **Ans.**

$s = 9.62$ m

Distance from ground,

$d = (30 - 9.62) = 20.4$ m **Ans.**

Also, origin at ground,

$$s = s_0 + v_0 t + \frac{1}{2} a_c t^2$$

$$s_A = 30 + 5t + \frac{1}{2}(-9.81)t^2$$

$$s_B = 0 + 20t + \frac{1}{2}(-9.81)t^2$$

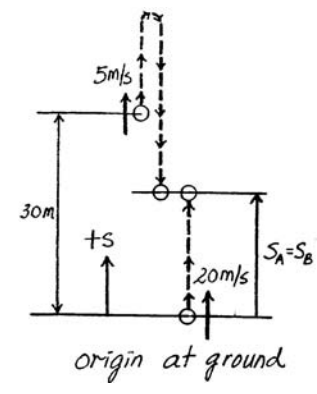

Require

$s_A = s_B$

$$30 + 5t + \frac{1}{2}(-9.81)t^2 = 20t + \frac{1}{2}(-9.81)t^2$$

$t = 2$ s **Ans.**

$s_B = 20.4$ m **Ans.**

© 2010 Pearson Education, Inc., Upper Saddle River, NJ. All rights reserved. This material is protected under all copyright laws as they currently exist. No portion of this material may be reproduced, in any form or by any means, without permission in writing from the publisher.

•12–33. A motorcycle starts from rest at $t = 0$ and travels along a straight road with a constant acceleration of 6 ft/s^2 until it reaches a speed of 50 ft/s. Afterwards it maintains this speed. Also, when $t = 0$, a car located 6000 ft down the road is traveling toward the motorcycle at a constant speed of 30 ft/s. Determine the time and the distance traveled by the motorcycle when they pass each other.

Motorcycle:

$(\overset{+}{\rightarrow})$ $\quad v = v_0 + a_c t'$

$50 = 0 + 6t'$

$t' = 8.33$ s

$v^2 = v_0^2 + 2a_c(s - s_0)$

$(50)^2 = 0 + 2(6)(s' - 0)$

$s' = 208.33$ ft

In $t' = 8.33$ s car travels

$s'' = v_0 t' = 30(8.33) = 250$ ft

Distance between motorcycle and car:

$6000 - 250 - 208.33 = 5541.67$ ft

When passing occurs for motorcycle,

$s = v_0 t; \qquad x = 50(t'')$

For car:

$s = v_0 t; \qquad 5541.67 - x = 30(t'')$

Solving,

$x = 3463.54$ ft

$t'' = 69.27$ s

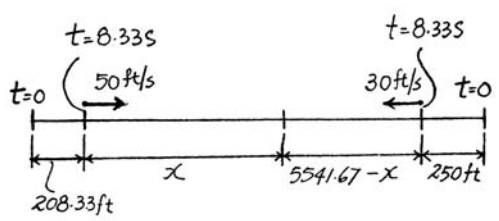

Thus, for the motorcycle,

$t = 69.27 + 8.33 = 77.6$ s **Ans.**

$s_m = 208.33 + 3463.54 = 3.67(10)^3$ ft **Ans.**

© 2010 Pearson Education, Inc., Upper Saddle River, NJ. All rights reserved. This material is protected under all copyright laws as they currently exist. No portion of this material may be reproduced, in any form or by any means, without permission in writing from the publisher.

12–34. A particle moves along a straight line with a velocity $v = (200s)$ mm/s, where s is in millimeters. Determine the acceleration of the particle at $s = 2000$ mm. How long does the particle take to reach this position if $s = 500$ mm when $t = 0$?

Acceleration:

$$(\overset{+}{\rightarrow}) \qquad \frac{dv}{ds} = 200s$$

Thus, $a = v\dfrac{dv}{ds} = (200s)(200) = 40\left(10^3\right)s \text{ mm/s}^2$

When $s = 2000$ mm,

$$a = 40\left(10^3\right)(2000) = 80\left(10^6\right) \text{ mm/s}^2 = 80 \text{ km/s}^2 \qquad \textbf{Ans.}$$

Position:

$$(\overset{+}{\rightarrow}) \qquad dt = \frac{ds}{v}$$

$$\int_0^t dt = \int_{500\text{ mm}}^s \frac{ds}{200s}$$

$$t\Big|_0^t = \frac{1}{200}\ln s\Big|_{500\text{ mm}}^s$$

$$t = \frac{1}{200}\ln\frac{s}{500}$$

At $s = 2000$ mm,

$$t = \frac{1}{200}\ln\frac{2000}{500} = 6.93\left(10^{-3}\right)\text{ s} = 6.93 \text{ ms} \qquad \textbf{Ans.}$$

© 2010 Pearson Education, Inc., Upper Saddle River, NJ. All rights reserved. This material is protected under all copyright laws as they currently exist. No portion of this material may be reproduced, in any form or by any means, without permission in writing from the publisher.

■12–35. A particle has an initial speed of 27 m/s. If it experiences a deceleration of $a = (-6t)$ m/s^2, where t is in seconds, determine its velocity, after it has traveled 10 m. How much time does this take?

Velocity:

$(\overset{+}{\rightarrow})$ $$dv = a\,dt$$

$$\int_{27}^{t} dv = \int_{0}^{t} (-6t)dt$$

$$v\Big|_{27}^{v} = \left(-3t^2\right)\Big|_{0}^{t}$$

$$v = (27 - 3t^2)\text{ m/s}$$

$(\overset{+}{\rightarrow})$ $$ds = v\,dt$$

$$\int_{0}^{s} ds = \int_{0}^{t} \left(27 - 3t^2\right)dt$$

$$s\Big|_{0}^{s} = \left(27t - t^3\right)\Big|_{0}^{t}$$

$$s = (27t - t^3)\text{ m/s}$$

When $s = 100$ m,

$$t = 0.372\text{ s} \qquad \textbf{Ans.}$$

$$v = 26.6\text{ m/s} \qquad \textbf{Ans.}$$

***12–36.** The acceleration of a particle traveling along a straight line is $a = (8 - 2s)$ m/s^2, where s is in meters. If $v = 0$ at $s = 0$, determine the velocity of the particle at $s = 2$ m, and the position of the particle when the velocity is maximum.

Velocity:

$(\overset{+}{\rightarrow})$ $$v\,dv = a\,ds$$

$$\int_{0}^{v} v dv = \int_{0}^{s} (8 - 2s)\,ds$$

$$\frac{v^2}{2}\Big|_{0}^{v} = \left(8s - s^2\right)\Big|_{0}^{s}$$

$$v = \sqrt{16s - 2s^2}\text{ m/s}$$

At $s = 2$ m,

$$v\Big|_{s=2\text{ m}} = \sqrt{16(2) - 2\left(2^2\right)} = \pm 4.90\text{ m/s} \qquad \textbf{Ans.}$$

When the velocity is maximum $\dfrac{dv}{ds} = 0$. Thus,

$$\frac{dv}{ds} = \frac{16 - 4s}{2\sqrt{16s - 2s^2}} = 0$$

$$16 - 4s = 0$$

$$s = 4\text{ m} \qquad \textbf{Ans.}$$

© 2010 Pearson Education, Inc., Upper Saddle River, NJ. All rights reserved. This material is protected under all copyright laws as they currently exist. No portion of this material may be reproduced, in any form or by any means, without permission in writing from the publisher.

•12–37. Ball A is thrown vertically upwards with a velocity of v_0. Ball B is thrown upwards from the same point with the same velocity t seconds later. Determine the elapsed time $t < 2v_{0/g}$ from the instant ball A is thrown to when the balls pass each other, and find the velocity of each ball at this instant.

Kinematics: First, we will consider the motion of ball A with $(v_A)_0 = v_0$, $(s_A)_0 = 0$, $s_A = h$, $t_A = t'$, and $(a_c)_A = -g$.

$(+\uparrow)$ $$s_A = (s_A)_0 + (v_A)_0 t_A + \frac{1}{2}(a_c)_A t_A{}^2$$

$$h = 0 + v_0 t' + \frac{1}{2}(-g)(t')^2$$

$$h = v_0 t' - \frac{g}{2}t'^2 \qquad \textbf{(1)}$$

$(+\uparrow)$ $$v_A = (v_A)_0 + (a_c)_A t_A$$

$$v_A = v_0 + (-g)(t')$$

$$v_A = v_0 - gt' \qquad \textbf{(2)}$$

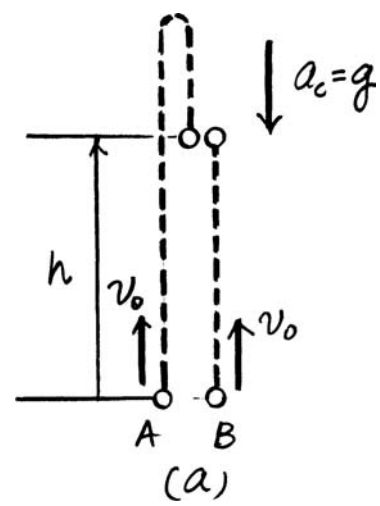

The motion of ball B requires $(v_B)_0 = v_0$, $(s_B)_0 = 0$, $s_B = h$, $t_B = t' - t$, and $(a_c)_B = -g$.

$(+\uparrow)$ $$s_B = (s_B)_0 + (v_B)_0 t_B + \frac{1}{2}(a_c)_B t_B{}^2$$

$$h = 0 + v_0(t' - t) + \frac{1}{2}(-g)(t' - t)^2$$

$$h = v_0(t' - t) - \frac{g}{2}(t' - t)^2 \qquad \textbf{(3)}$$

$(+\uparrow)$ $$v_B = (v_B)_0 + (a_c)_B t_B$$

$$v_B = v_0 + (-g)(t' - t)$$

$$v_B = v_0 - g(t' - t) \qquad \textbf{(4)}$$

Solving Eqs. (1) and (3),

$$v_0 t' - \frac{g}{2}t'^2 = v_0(t' - t) - \frac{g}{2}(t' - t)^2$$

$$t' = \frac{2v_0 + gt}{2g} \qquad \textbf{Ans.}$$

Substituting this result into Eqs. (2) and (4),

$$v_A = v_0 - g\left(\frac{2v_0 + gt}{2g}\right)$$

$$= -\frac{1}{2}gt = \frac{1}{2}gt\downarrow \qquad \textbf{Ans.}$$

$$v_B = v_0 - g\left(\frac{2v_0 + gt}{2g} - t\right)$$

$$= \frac{1}{2}gt \uparrow \qquad \textbf{Ans.}$$

© 2010 Pearson Education, Inc., Upper Saddle River, NJ. All rights reserved. This material is protected under all copyright laws as they currently exist. No portion of this material may be reproduced, in any form or by any means, without permission in writing from the publisher.

12–38. As a body is projected to a high altitude above the earth's *surface*, the variation of the acceleration of gravity with respect to altitude y must be taken into account. Neglecting air resistance, this acceleration is determined from the formula $a = -g_0[R^2/(R + y)^2]$, where g_0 is the constant gravitational acceleration at sea level, R is the radius of the earth, and the positive direction is measured upward. If $g_0 = 9.81\ \text{m/s}^2$ and $R = 6356$ km, determine the minimum initial velocity (escape velocity) at which a projectile should be shot vertically from the earth's surface so that it does not fall back to the earth. *Hint:* This requires that $v = 0$ as $y \to \infty$.

$$v\,dv = a\,dy$$

$$\int_v^0 v\,dv = -g_0R^2\int_0^\infty \frac{dy}{(R + y)^2}$$

$$\left.\frac{v^2}{2}\right|_v^0 = \left.\frac{g_0R^2}{R + y}\right|_0^\infty$$

$$v = \sqrt{2g_0R}$$

$$= \sqrt{2(9.81)(6356)(10)^3}$$

$$= 11167\ \text{m/s} = 11.2\ \text{km/s}$$ **Ans.**

12–39. Accounting for the variation of gravitational acceleration a with respect to altitude y (see Prob. 12–38), derive an equation that relates the velocity of a freely falling particle to its altitude. Assume that the particle is released from rest at an altitude y_0 from the earth's surface. With what velocity does the particle strike the earth if it is released from rest at an altitude $y_0 = 500$ km? Use the numerical data in Prob. 12–38.

From Prob. 12–38,

$$(+\uparrow) \qquad a = -g_0\frac{R^2}{(R + y)^2}$$

Since $a\,dy = v\,dv$

then

$$-g_0R^2\int_{y_0}^{y}\frac{dy}{(R + y)^2} = \int_0^v v\,dv$$

$$g_0R^2\left[\frac{1}{R + y}\right]_{y_0}^{y} = \frac{v^2}{2}$$

$$g_0R^2\left[\frac{1}{R + y} - \frac{1}{R + y_0}\right] = \frac{v^2}{2}$$

Thus

$$v = -R\sqrt{\frac{2g_0(y_0 - y)}{(R + y)(R + y_0)}}$$

When $y_0 = 500$ km, $\quad y = 0$,

$$v = -6356(10^3)\sqrt{\frac{2(9.81)(500)(10^3)}{6356(6356 + 500)(10^6)}}$$

$$v = -3016\ \text{m/s} = 3.02\ \text{km/s}\ \downarrow$$ **Ans.**

© 2010 Pearson Education, Inc., Upper Saddle River, NJ. All rights reserved. This material is protected under all copyright laws as they currently exist. No portion of this material may be reproduced, in any form or by any means, without permission in writing from the publisher.

***12–40.** When a particle falls through the air, its initial acceleration $a = g$ diminishes until it is zero, and thereafter it falls at a constant or terminal velocity v_f. If this variation of the acceleration can be expressed as $a = (g/v^2{}_f)(v^2{}_f - v^2)$, determine the time needed for the velocity to become $v = v_f/2$. Initially the particle falls from rest.

$$\frac{dv}{dt} = a = \left(\frac{g}{v_f^2}\right)\left(v_f^2 - v^2\right)$$

$$\int_0^v \frac{dv}{v_f^2 - v^{2'}} = \frac{g}{v_f^2}\int_0^t dt$$

$$\frac{1}{2v_f}\ln\left(\frac{v_f + v}{v_f - v}\right)\Bigg|_0^v = \frac{g}{v_f^2}t$$

$$t = \frac{v_f}{2g}\ln\left(\frac{v_f + v}{v_f - v}\right)$$

$$t = \frac{v_f}{2g}\ln\left(\frac{v_f + v_{f/2}}{v_f - v_{f/2}}\right)$$

$$t = 0.549\left(\frac{v_f}{g}\right) \qquad \textbf{Ans.}$$

© 2010 Pearson Education, Inc., Upper Saddle River, NJ. All rights reserved. This material is protected under all copyright laws as they currently exist. No portion of this material may be reproduced, in any form or by any means, without permission in writing from the publisher.

•12–41. A particle is moving along a straight line such that its position from a fixed point is $s = (12 - 15t^2 + 5t^3)$ m, where t is in seconds. Determine the total distance traveled by the particle from $t = 1$ s to $t = 3$ s. Also, find the average speed of the particle during this time interval.

Velocity:

$$(\overset{+}{\rightarrow}) \qquad v = \frac{ds}{dt} = \frac{d}{dt}\left(12 - 15t^2 + 5t^3\right)$$

$$v = -30t + 15t^2 \text{ m/s}$$

The velocity of the particle changes direction at the instant when it is momentarily brought to rest. Thus,

$$v = -30t + 15t^2 = 0$$

$$t(-30 + 15t) = 0$$

$$t = 0 \text{ and } 2 \text{ s}$$

Position: The positions of the particle at $t = 0$ s, 1 s, 2 s, and 3 s are

$$s\big|_{t=0\text{ s}} = 12 - 15\left(0^2\right) + 5\left(0^3\right) = 12 \text{ m}$$

$$s\big|_{t=1\text{ s}} = 12 - 15\left(1^2\right) + 5\left(1^3\right) = 2 \text{ m}$$

$$s\big|_{t=2\text{ s}} = 12 - 15\left(2^2\right) + 5\left(2^3\right) = -8 \text{ m}$$

$$s\big|_{t=3\text{ s}} = 12 - 15\left(3^2\right) + 5\left(3^3\right) = 12 \text{ m}$$

Using the above results, the path of the particle is shown in Fig. *a*. From this figure, the distance traveled by the particle during the time interval $t = 1$ s to $t = 3$ s is

$$s_{\text{Tot}} = (2 + 8) + (8 + 12) = 30 \text{ m} \qquad \textbf{Ans.}$$

The average speed of the particle during the same time interval is

$$v_{\text{avg}} = \frac{s_{\text{Tot}}}{\Delta t} = \frac{30}{3 - 1} = 15 \text{ m/s} \qquad \textbf{Ans.}$$

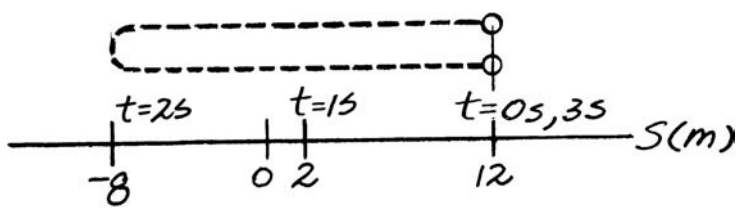

(a)

© 2010 Pearson Education, Inc., Upper Saddle River, NJ. All rights reserved. This material is protected under all copyright laws as they currently exist. No portion of this material may be reproduced, in any form or by any means, without permission in writing from the publisher.

12–42. The speed of a train during the first minute has been recorded as follows:

t (s)	0	20	40	60
v (m/s)	0	16	21	24

Plot the $v-t$ graph, approximating the curve as straight-line segments between the given points. Determine the total distance traveled.

The total distance traveled is equal to the area under the graph.

$$s_T = \frac{1}{2}(20)(16) + \frac{1}{2}(40 - 20)(16 + 21) + \frac{1}{2}(60 - 40)(21 + 24) = 980 \text{ m} \quad \textbf{Ans.}$$

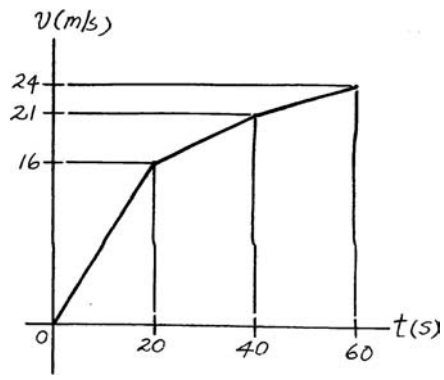

© 2010 Pearson Education, Inc., Upper Saddle River, NJ. All rights reserved. This material is protected under all copyright laws as they currently exist. No portion of this material may be reproduced, in any form or by any means, without permission in writing from the publisher.

12–43. A two-stage missile is fired vertically from rest with the acceleration shown. In 15 s the first stage A burns out and the second stage B ignites. Plot the $v-t$ and $s-t$ graphs which describe the two-stage motion of the missile for $0 \le t \le 20$ s.

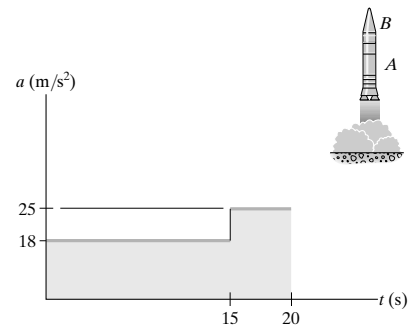

Since $v = \int a\,dt$, the constant lines of the a–t graph become sloping lines for the v–t graph.

The numerical values for each point are calculated from the total area under the a–t graph to the point.

At $t = 15$ s, $\quad v = (18)(15) = 270$ m/s

At $t = 20$ s, $\quad v = 270 + (25)(20 - 15) = 395$ m/s

Since $s = \int v\,dt$, the sloping lines of the v–t graph become parabolic curves for the s–t graph.

The numerical values for each point are calculated from the total area under the v–t graph to the point.

At $t = 15$ s, $\quad s = \frac{1}{2}(15)(270) = 2025$ m

At $t = 20$ s, $\quad s = 2025 + 270(20 - 15) + \frac{1}{2}(395 - 270)(20 - 15) = 3687.5 \text{ m} = 3.69 \text{ km}$

Also:

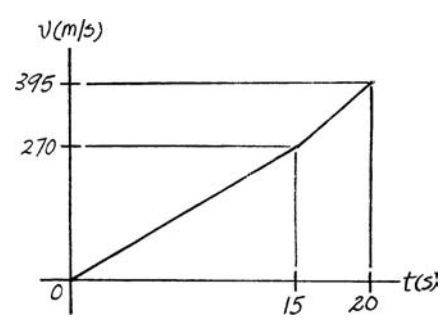

$0 \le t \le 15$:

$a = 18$

$v = v_0 + a_c t = 0 + 18t$

$s = s_0 + v_0 t + \frac{1}{2} a_c t^2 = 0 + 0 + 9t^2$

At $t = 15$:

$v = 18(15) = 270$

$s = 9(15)^2 = 2025$

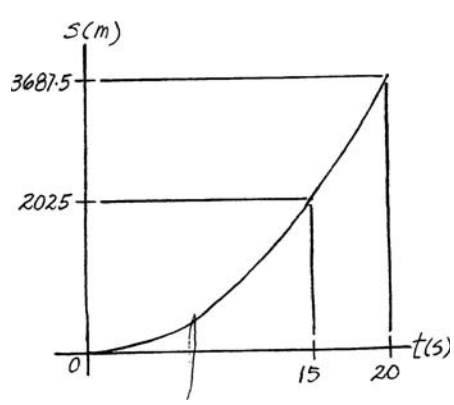

$15 \le t \le 20$:

$a = 25$

$v = v_0 + a_c t = 270 + 25(t - 15)$

$s = s_0 + v_0 t + \frac{1}{2} a_c t^2 = 2025 + 270(t - 15) + \frac{1}{2}(25)(t - 15)^2$

When $t = 20$:

$v = 395$ m/s

$s = 3687.5 \text{ m} = 3.69 \text{ km}$

© 2010 Pearson Education, Inc., Upper Saddle River, NJ. All rights reserved. This material is protected under all copyright laws as they currently exist. No portion of this material may be reproduced, in any form or by any means, without permission in writing from the publisher.

***12–44.** A freight train starts from rest and travels with a constant acceleration of 0.5 ft/s^2. After a time t' it maintains a constant speed so that when $t = 160$ s it has traveled 2000 ft. Determine the time t' and draw the v–t graph for the motion.

Total Distance Traveled: The distance for part one of the motion can be related to time $t = t'$ by applying Eq. 12–5 with $s_0 = 0$ and $v_0 = 0$.

$$(\overset{+}{\rightarrow}) \qquad s = s_0 + v_0 t + \frac{1}{2} a_c t^2$$

$$s_1 = 0 + 0 + \frac{1}{2}(0.5)(t')^2 = 0.25(t')^2$$

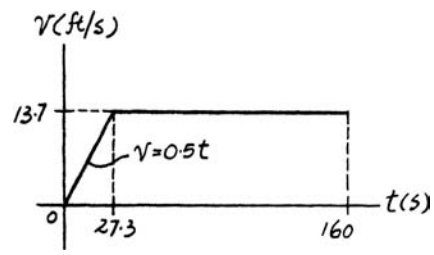

The velocity at time t can be obtained by applying Eq. 12–4 with $v_0 = 0$.

$$(\overset{+}{\rightarrow}) \qquad v = v_0 + a_c t = 0 + 0.5t = 0.5t \qquad \textbf{[1]}$$

The time for the second stage of motion is $t_2 = 160 - t'$ and the train is traveling at a constant velocity of $v = 0.5t'$ (Eq. [1]). Thus, the distance for this part of motion is

$$(\overset{+}{\rightarrow}) \qquad s_2 = vt_2 = 0.5t'(160 - t') = 80t' - 0.5(t')^2$$

If the total distance traveled is $s_{\text{Tot}} = 2000$, then

$$s_{\text{Tot}} = s_1 + s_2$$

$$2000 = 0.25(t')^2 + 80t' - 0.5(t')^2$$

$$0.25(t')^2 - 80t' + 2000 = 0$$

Choose a root that is less than 160 s, then

$$t' = 27.34 \text{ s} = 27.3 \text{ s} \qquad \textbf{Ans.}$$

***v – t* Graph:** The equation for the velocity is given by Eq. [1]. When $t = t' = 27.34$ s, $v = 0.5(27.34) = 13.7$ ft/s.

© 2010 Pearson Education, Inc., Upper Saddle River, NJ. All rights reserved. This material is protected under all copyright laws as they currently exist. No portion of this material may be reproduced, in any form or by any means, without permission in writing from the publisher.

•12–45. If the position of a particle is defined by $s = [2 \sin (\pi/5)t + 4]$ m, where t is in seconds, construct the $s-t$, $v-t$, and $a-t$ graphs for $0 \leq t \leq 10$ s.

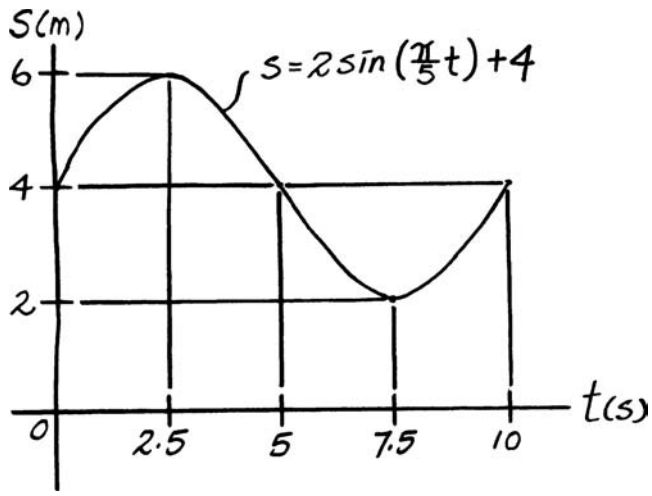

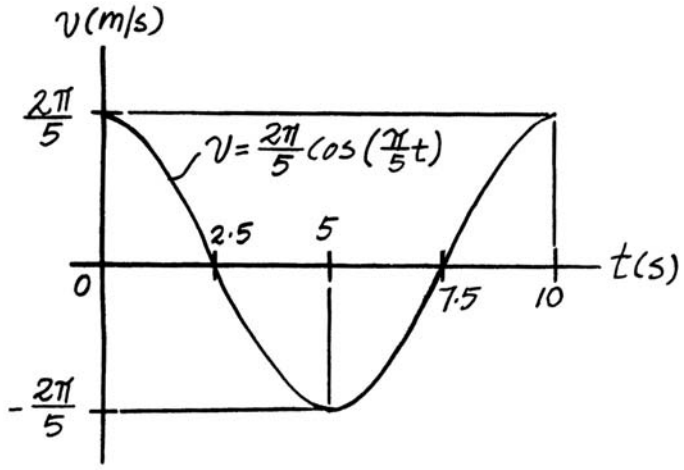

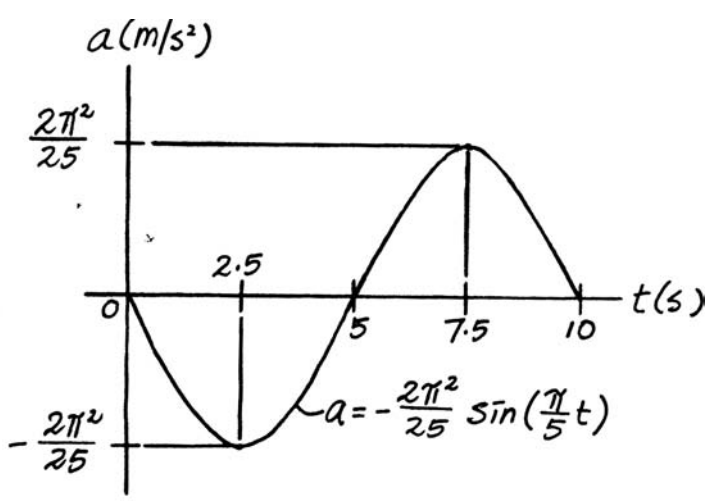

© 2010 Pearson Education, Inc., Upper Saddle River, NJ. All rights reserved. This material is protected under all copyright laws as they currently exist. No portion of this material may be reproduced, in any form or by any means, without permission in writing from the publisher.

12–46. A train starts from station A and for the first kilometer, it travels with a uniform acceleration. Then, for the next two kilometers, it travels with a uniform speed. Finally, the train decelerates uniformly for another kilometer before coming to rest at station B. If the time for the whole journey is six minutes, draw the v–t graph and determine the maximum speed of the train.

For stage (1) motion,

$(\overset{+}{\rightarrow})$ $$v_1 = v_0 + (a_c)_1 t$$

$$v_{max} = 0 + (a_c)_1 t_1$$

$$v_{max} = (a_c)_1 t_1 \qquad \textbf{(1)}$$

$(\overset{+}{\rightarrow})$ $$v_1^2 = v_0^2 + 2(a_c)_1(s_1 - s_0)$$

$$v_{max}^2 = 0 + 2(a_c)_1(1000 - 0)$$

$$(a_c)_1 = \frac{v_{max}^2}{2000} \qquad \textbf{(2)}$$

Eliminating $(a_c)_1$ from Eqs. (1) and (2), we have

$$t_1 = \frac{2000}{v_{max}} \qquad \textbf{(3)}$$

For stage (2) motion, the train travels with the constant velocity of v_{max} for $t = (t_2 - t_1)$. Thus,

$(\overset{+}{\rightarrow})$ $$s_2 = s_1 + v_1 t + \frac{1}{2}(a_c)_2 t^2$$

$$1000 + 2000 = 1000 + v_{max}(t_2 - t_1) + 0$$

$$t_2 - t_1 = \frac{2000}{v_{max}} \qquad \textbf{(4)}$$

For stage (3) motion, the train travels for $t = 360 - t_2$. Thus,

$(\overset{+}{\rightarrow})$ $$v_3 = v_2 + (a_c)_3 t$$

$$0 = v_{max} - (a_c)_3(360 - t_2)$$

$$v_{max} = (a_c)_3(360 - t_2) \qquad \textbf{(5)}$$

$(\overset{+}{\rightarrow})$ $$v_3^2 = v_2^2 + 2(a_c)_3(s_3 - s_2)$$

$$0 = v_{max}^2 + 2\left[-(a_c)_3\right](4000 - 3000)$$

$$(a_c)_3 = \frac{v_{max}^2}{2000} \qquad \textbf{(6)}$$

Eliminating $(a_c)_3$ from Eqs. (5) and (6) yields

$$360 - t_2 = \frac{2000}{v_{max}} \qquad \textbf{(7)}$$

Solving Eqs. (3), (4), and (7), we have

$$t_1 = 120 \text{ s} \qquad t_2 = 240 \text{ s}$$

$$v_{max} = 16.7 \text{ m/s} \qquad \textbf{Ans.}$$

Based on the above results the $v-t$ graph is shown in Fig. a.

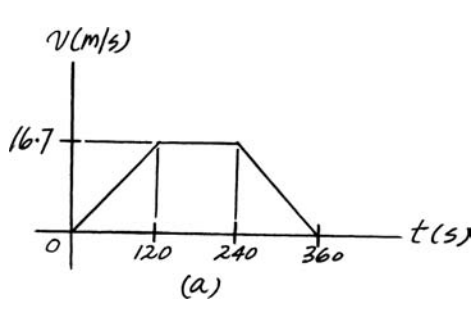

(a)

© 2010 Pearson Education, Inc., Upper Saddle River, NJ. All rights reserved. This material is protected under all copyright laws as they currently exist. No portion of this material may be reproduced, in any form or by any means, without permission in writing from the publisher.

12–47. The particle travels along a straight line with the velocity described by the graph. Construct the $a-s$ graph.

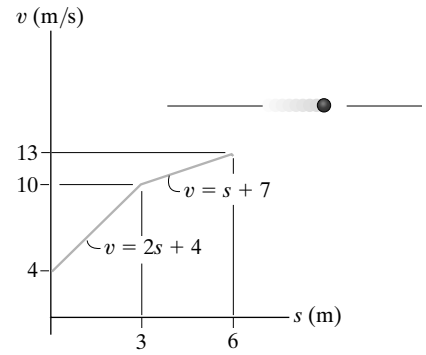

***a − s* Graph:** For $0 \le s < 3$ m,

$$(\overset{+}{\rightarrow}) \qquad a = v\frac{dv}{ds} = (2s + 4)(2) = (4s + 8)\ \text{m/s}^2$$

At $s = 0$ m and 3 m,

$$a|_{s=0\,\text{m}} = 4(0) + 8 = 8\ \text{m/s}^2$$

$$a|_{s=3\,\text{m}} = 4(3) + 8 = 20\ \text{m/s}^2$$

For $3\text{m} < s \le 6$ m,

$$(\overset{+}{\rightarrow}) \qquad a = v\frac{dv}{ds} = (s + 7)(1) = (s + 7)\ \text{m/s}^2$$

At $s = 3$ m and 6 m,

$$a|_{s=3\,\text{m}} = 3 + 7 = 10\ \text{m/s}^2$$

$$a|_{s=6\,\text{m}} = 6 + 7 = 13\ \text{m/s}^2$$

The $a-s$ graph is shown in Fig. a.

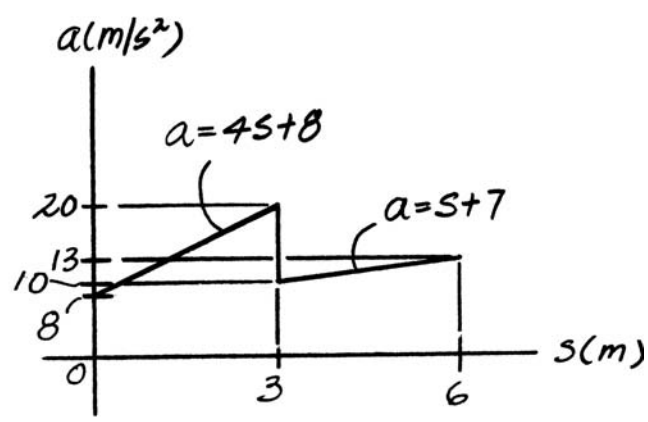

(a)

© 2010 Pearson Education, Inc., Upper Saddle River, NJ. All rights reserved. This material is protected under all copyright laws as they currently exist. No portion of this material may be reproduced, in any form or by any means, without permission in writing from the publisher.

***12–48.** The a–s graph for a jeep traveling along a straight road is given for the first 300 m of its motion. Construct the v–s graph. At $s = 0, v = 0$.

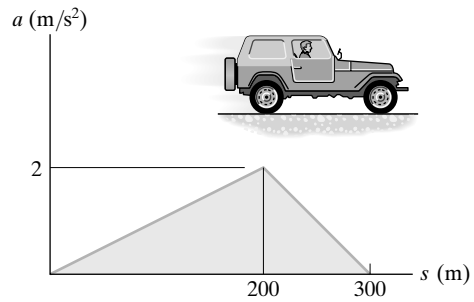

***a*–*s* Graph**: The function of acceleration a in terms of s for the interval $0\text{ m} \le s < 200\text{ m}$ is

$$\frac{a-0}{s-0} = \frac{2-0}{200-0} \qquad a = (0.01s)\text{ m/s}^2$$

For the interval $200\text{ m} < s \le 300\text{ m}$,

$$\frac{a-2}{s-200} = \frac{0-2}{300-200} \qquad a = (-0.02s + 6)\text{ m/s}^2$$

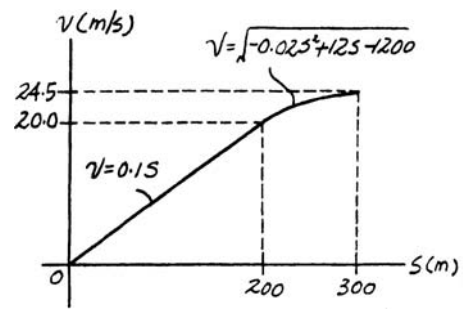

***v*–*s* Graph**: The function of velocity v in terms of s can be obtained by applying $vdv = ads$. For the interval **$0\text{ m} \le s < 200\text{ m}$**,

$$vdv = ds$$

$$\int_0^v vdv = \int_0^s 0.01sds$$

$$v = (0.1s)\text{ m/s}$$

At $s = 200\text{ m}$, $\qquad v = 0.100(200) = 20.0\text{ m/s}$

For the interval **$200\text{ m} < s \le 300\text{ m}$**,

$$vdv = ads$$

$$\int_{20.0\text{m/s}}^v vdv = \int_{200m}^s (-0.02s + 6)ds$$

$$v = \left(\sqrt{-0.02s^2 + 12s - 1200}\right)\text{ m/s}$$

At $s = 300\text{ m}$, $\qquad v = \sqrt{-0.02(300^2) + 12(300) - 1200} = 24.5\text{ m/s}$

© 2010 Pearson Education, Inc., Upper Saddle River, NJ. All rights reserved. This material is protected under all copyright laws as they currently exist. No portion of this material may be reproduced, in any form or by any means, without permission in writing from the publisher.

•12–49. A particle travels along a curve defined by the equation $s = (t^3 - 3t^2 + 2t)$ m. where t is in seconds. Draw the $s - t$, $v - t$, and $a - t$ graphs for the particle for $0 \le t \le 3$ s.

$s = t^3 - 3t^2 + 2t$

$v = \dfrac{ds}{dt} = 3t^2 - 6t + 2$

$a = \dfrac{dv}{dt} = 6t - 6$

$v = 0$ at $0 = 3t^2 - 6t + 2$

$t = 1.577$ s, and $t = 0.4226$ s,

$s|_{t=1.577} = -0.386$ m

$s|_{t=0.4226} = 0.385$ m

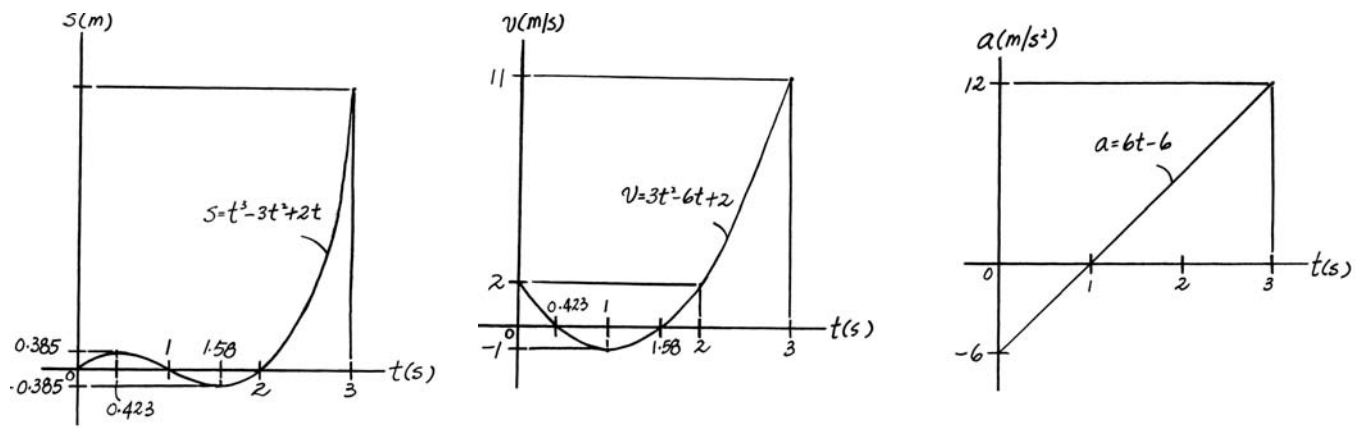

12–50. A truck is traveling along the straight line with a velocity described by the graph. Construct the $a-s$ graph for $0 \le s \le 1500$ ft.

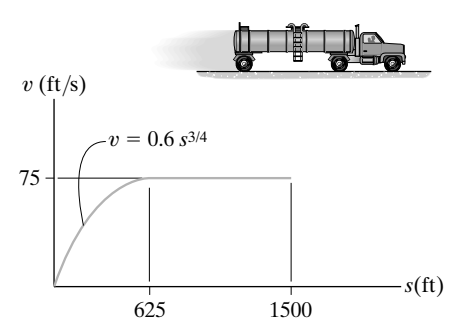

***a − s* Graph:** For $0 \le s < 625$ ft,

$$(\overset{+}{\rightarrow}) \qquad a = v\frac{dv}{ds} = \left(0.6s^{3/4}\right)\left[\frac{3}{4}(0.6)s^{-1/4}\right] = \left(0.27s^{1/2}\right)\text{ft/s}^2$$

At $s = 625$ft,

$a|_{s=625\text{ ft}} = 0.27\left(625^{1/2}\right) = 6.75\text{ft/s}^2$

For 625 ft $< s <$ 1500 ft,

$$(\overset{+}{\rightarrow}) \qquad a = v\frac{dv}{ds} = 75(0) = 0$$

The $a-s$ graph is shown in Fig. a.

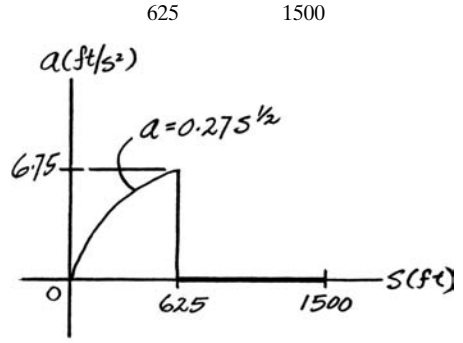

(a)

© 2010 Pearson Education, Inc., Upper Saddle River, NJ. All rights reserved. This material is protected under all copyright laws as they currently exist. No portion of this material may be reproduced, in any form or by any means, without permission in writing from the publisher.

12–51. A car starts from rest and travels along a straight road with a velocity described by the graph. Determine the total distance traveled until the car stops. Construct the s–t and a–t graphs.

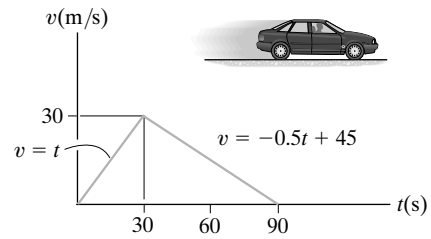

***s − t* Graph:** For the time interval $0 \le t < 30$ s, the initial condition is $s = 0$ when $t = 0$ s.

$$(\overset{+}{\rightarrow}) \qquad ds = vdt$$

$$\int_0^s ds = \int_0^t tdt$$

$$s = \left(\frac{t^2}{2}\right) \text{m}$$

When $t = 30$ s,

$$s = \frac{30^2}{2} = 450 \text{ m}$$

For the time interval $30 \text{ s} < t \le 90$ s, the initial condition is $s = 450$ m when $t = 30$ s.

$$(\overset{+}{\rightarrow}) \qquad ds = vdt$$

$$\int_{450 \text{ m}}^s ds = \int_{30\text{s}}^t (-0.5t + 45)dt$$

$$s = \left(-\frac{1}{4}t^2 + 45t - 675\right) \text{m}$$

When $t = 90$ s,

$$s\big|_{t=90 \text{ s}} = -\frac{1}{4}\left(90^2\right) + 45(90) - 675 = 1350 \text{ m} \qquad \textbf{Ans.}$$

The $s - t$ graph shown is in Fig. a.

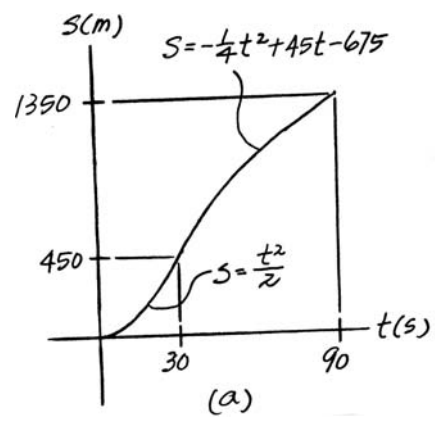

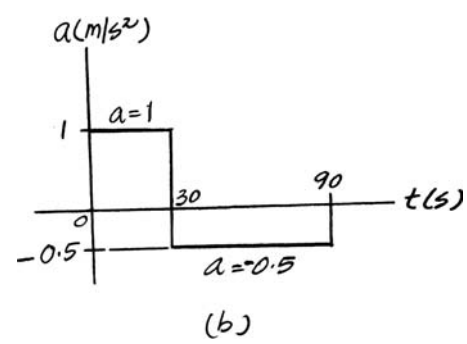

***a − t* Graph:** For the time interval $0 < t < 30$ s,

$$a = \frac{dv}{dt} = \frac{d}{dt}(t) = 1 \text{ m/s}^2$$

For the time interval $30 \text{ s} < t \le 90$ s,

$$a = \frac{dv}{dt} = \frac{d}{dt}(-0.5t + 45) = -0.5 \text{ m/s}^2$$

The $a - t$ graph is shown in Fig. b.

Note: Since the change in position of the car is equal to the area under the $v - t$ graph, the total distance traveled by the car is

$$\Delta s = \int vdt$$

$$s\big|_{t=90 \text{ s}} - 0 = \frac{1}{2}(90)(30)$$

$$s\big|_{t=90 \text{ s}} = 1350 \text{ s}$$

© 2010 Pearson Education, Inc., Upper Saddle River, NJ. All rights reserved. This material is protected under all copyright laws as they currently exist. No portion of this material may be reproduced, in any form or by any means, without permission in writing from the publisher.

***12–52.** A car travels up a hill with the speed shown. Determine the total distance the car travels until it stops ($t = 60$ s). Plot the $a-t$ graph.

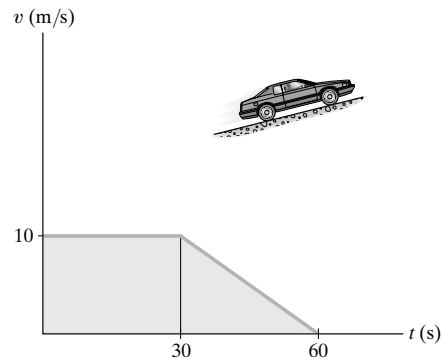

Distance traveled is area under $v-t$ graph.

$$s = (10)(30) + \frac{1}{2}(10)(30) = 450 \text{ m}$$

Ans.

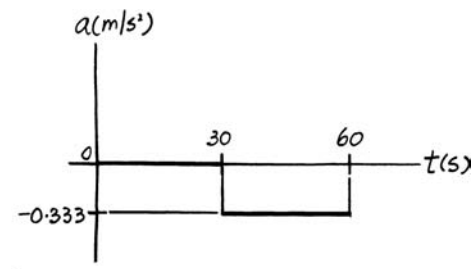

•12–53. The snowmobile moves along a straight course according to the v–t graph. Construct the s–t and a–t graphs for the same 50-s time interval. When $t = 0$, $s = 0$.

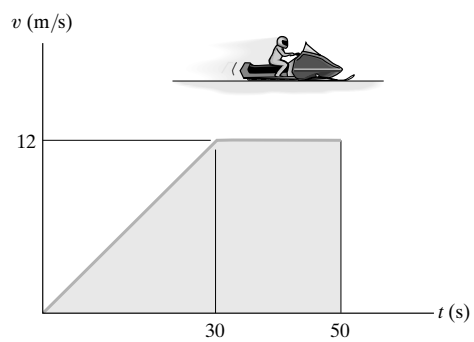

$s-t$ Graph: The position function in terms of time t can be obtained by applying $v = \frac{ds}{dt}$. For time interval $0 \text{ s} \le t < 30 \text{ s}$, $v = \frac{12}{30}t = \left(\frac{2}{5}t\right)$ m/s.

$$ds = vdt$$

$$\int_0^s ds = \int_0^t \frac{2}{5}tdt$$

$$s = \left(\frac{1}{5}t^2\right) \text{ m}$$

At $t = 30$ s, $\quad s = \frac{1}{5}\left(30^2\right) = 180$ m

For time interval $\mathbf{30 \text{ s} < t \le 50 \text{ s}}$,

$$ds = vdt$$

$$\int_{180 \text{ m}}^s ds = \int_{30 \text{ s}}^t 12dt$$

$$s = (12t - 180) \text{ m}$$

At $t = 50$ s, $\quad s = 12(50) - 180 = 420$ m

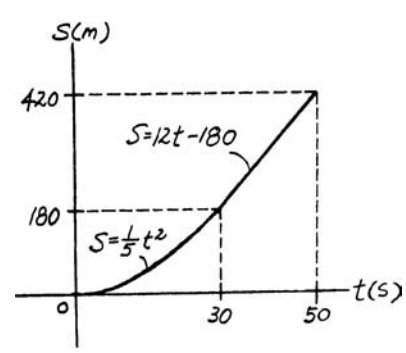

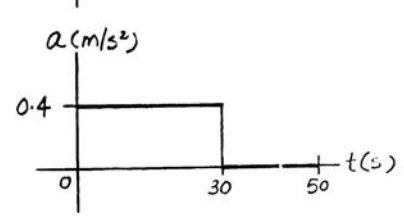

$a-t$ Graph: The acceleration function in terms of time t can be obtained by applying $a = \frac{dv}{dt}$. For time interval $\mathbf{0 \text{ s} \le t < 30 \text{ s}}$ and $\mathbf{30 \text{ s} < t \le 50 \text{ s}}$, $a = \frac{dv}{dt} = \frac{2}{5} = 0.4 \text{ m/s}^2$ and $a = \frac{dv}{dt} = 0$, respectively.

© 2010 Pearson Education, Inc., Upper Saddle River, NJ. All rights reserved. This material is protected under all copyright laws as they currently exist. No portion of this material may be reproduced, in any form or by any means, without permission in writing from the publisher.

12–54. A motorcyclist at A is traveling at 60 ft/s when he wishes to pass the truck T which is traveling at a constant speed of 60 ft/s. To do so the motorcyclist accelerates at 6 ft/s^2 until reaching a maximum speed of 85 ft/s. If he then maintains this speed, determine the time needed for him to reach a point located 100 ft in front of the truck. Draw the $v-t$ and $s-t$ graphs for the motorcycle during this time.

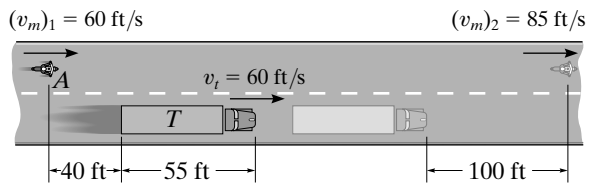

Motorcycle:

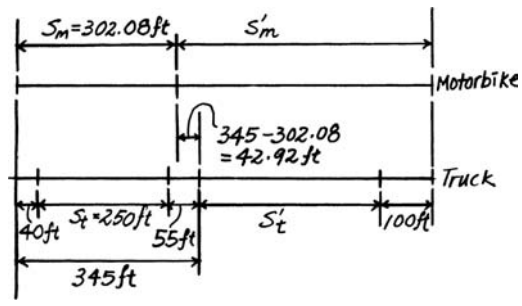

Time to reach 85 ft/s,

$$v = v_0 + a_c t$$

$$85 = 60 + 6t$$

$$t = 4.167 \text{ s}$$

$$v^2 = v_0^2 + 2a_c(s - s_0)$$

Distance traveled,

$$(85)^2 = (60)^2 + 2(6)(s_m - 0)$$

$$s_m = 302.08 \text{ ft}$$

In $t = 4.167$ s, truck travels

$$s_t = 60(4.167) = 250 \text{ ft}$$

Further distance for motorcycle to travel: $40 + 55 + 250 + 100 - 302.08 = 142.92$ ft

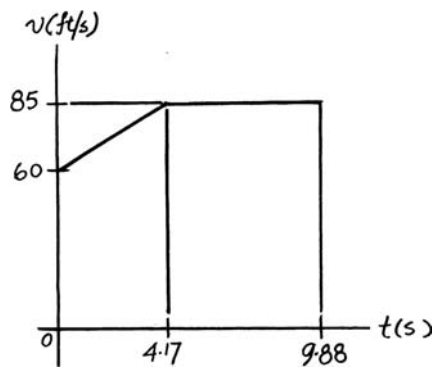

Motorcycle:

$$s = s_0 + v_0 t$$

$$(s + 142.92) = 0 + 85t'$$

Truck:

$$s = 0 + 60t'$$

Thus $t' = 5.717$ s

$$t = 4.167 + 5.717 = 9.88 \text{ s}$$ **Ans.**

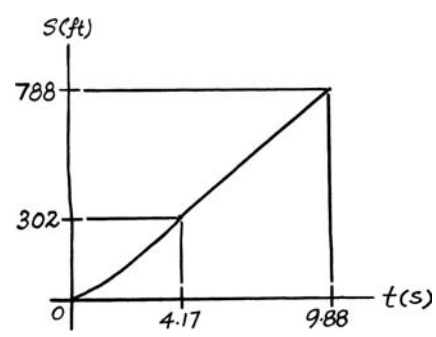

Total distance motorcycle travels

$$s_T = 302.08 + 85(5.717) = 788 \text{ ft}$$

© 2010 Pearson Education, Inc., Upper Saddle River, NJ. All rights reserved. This material is protected under all copyright laws as they currently exist. No portion of this material may be reproduced, in any form or by any means, without permission in writing from the publisher.

12–55. An airplane traveling at 70 m/s lands on a straight runway and has a deceleration described by the graph. Determine the time t' and the distance traveled for it to reach a speed of 5 m/s. Construct the v–t and s–t graphs for this time interval, $0 \le t \le t'$.

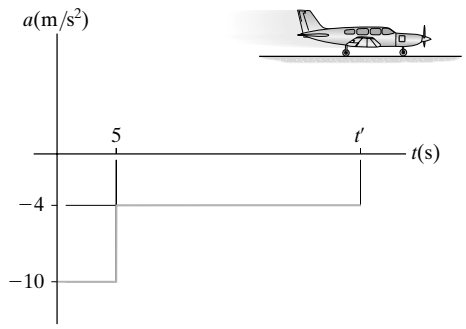

***v − t* Graph:** For the time interval $0 \le t < 5$ s, the initial condition is $v = 70$ m/s when $t = 0$ s.

$(\overset{+}{\rightarrow})$ $\quad dv = adt$

$$\int_{70\text{ m/s}}^{v} dv = \int_{0}^{t} -10dt$$

$$v = (-10t + 70)\text{ m/s}$$

When $t = 5$ s,

$$v|_{t=5\text{ s}} = -10(5) + 70 = 20\text{ m/s}$$

For the time interval $5\text{ s} < t \le t'$, the initial condition is $v = 20$ m/s when $t = 5$ s.

$(\overset{+}{\rightarrow})$ $\quad dv = adt$

$$\int_{20\text{ m/s}}^{v} dv = \int_{5\text{ s}}^{t} -4dt$$

$$v = (-4t + 40)\text{ m/s}$$

When $v = 5$ m/s,

$5 = -4t' + 40 \qquad t' = 8.75$ s **Ans.**

Also, the change in velocity is equal to the area under the a–t graph. Thus,

$$\Delta v = \int adt$$

$$5 - 70 = -\left[5(10) + 4(t' - 5)\right]$$

$$t' = 8.75s'$$

The v–t graph is shown in Fig. a.

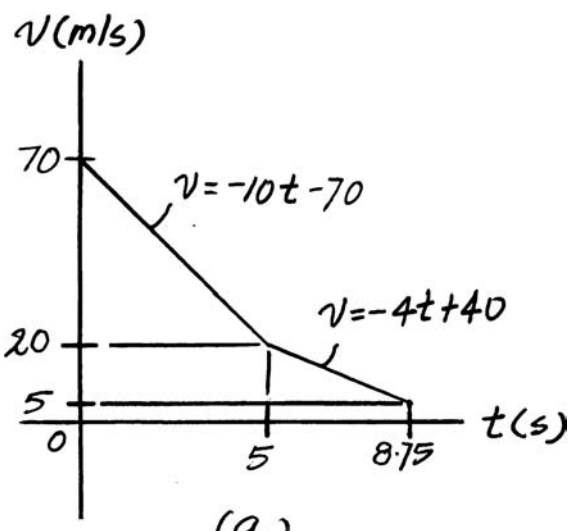

(a)

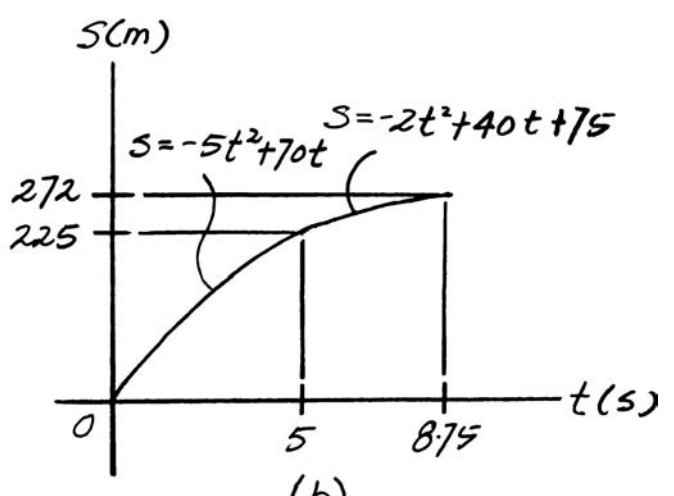

(b)

© 2010 Pearson Education, Inc., Upper Saddle River, NJ. All rights reserved. This material is protected under all copyright laws as they currently exist. No portion of this material may be reproduced, in any form or by any means, without permission in writing from the publisher.

12–57. Continued

***s – t* Graph:** For the time interval $0 \le t < 5$ s, the initial condition is $s = 0$ when $t = 0$ s.

$(\overset{+}{\rightarrow})$ $$ds = vdt$$

$$\int_0^s ds = \int_0^t (-10t + 70)dt$$

$$s = \left(-5t^2 + 70t\right)\text{m}$$

When $t = 5$ s,

$$s\Big|_{t=5\text{ s}} = -5\left(5^2\right) + 70(5) = 225\text{ m}$$

For the time interval $5 < t \le t' = 8.75$ s the initial condition is $s = 225$ m when $t = 5$ s.

$(\overset{+}{\rightarrow})$ $$ds = vdt$$

$$\int_{225\text{ m}}^s ds = \int_5^t (-4t + 40)dt$$

$$s = \left(-2t^2 + 40t + 75\right)\text{m}$$

When $t = t' = 8.75$ s,

$$s\Big|_{t=8.75\text{ s}} = -2\left(8.75^2\right) + 40(8.75) + 75 = 271.875\text{ m} = 272\text{ m} \qquad \textbf{Ans.}$$

Also, the change in position is equal to the area under the *v–t* graph. Referring to Fig. *a*, we have

$$\Delta s = \int vdt$$

$$s\Big|_{t=8.75\text{ s}} - 0 = \frac{1}{2}(70 + 20)(5) + \frac{1}{2}(20 + 5)(3.75) = 271.875\text{ m} = 272\text{ m} \qquad \textbf{Ans.}$$

The *s–t* graph is shown in Fig. *b*.

© 2010 Pearson Education, Inc., Upper Saddle River, NJ. All rights reserved. This material is protected under all copyright laws as they currently exist. No portion of this material may be reproduced, in any form or by any means, without permission in writing from the publisher.

***12–56.** The position of a cyclist traveling along a straight road is described by the graph. Construct the v–t and a–t graphs.

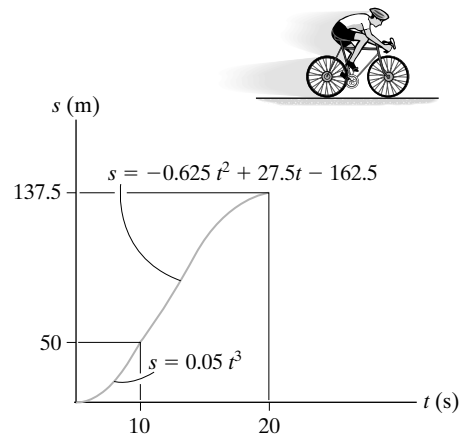

***v* – *t* Graph:** For the time interval $0 \le t < 10$ s,

$$(\overset{+}{\rightarrow}) \qquad v = \frac{ds}{dt} = \frac{d}{dt}\left(0.05t^3\right) = \left(0.15t^2\right) \text{ m/s}$$

When $t = 0$ s and 10 s,

$$v\big|_{t=0} = 0.15\left(0^2\right) = 0 \qquad\qquad v\big|_{t=10\text{ s}} = 0.15\left(10^2\right) = 15 \text{ m/s}$$

For the time interval $10 \text{ s} < t \le 20$ s,

$$(\overset{+}{\rightarrow}) \qquad v = \frac{ds}{dt} = \frac{d}{dt}\left(-0.625t^2 + 27.5t - 162.5\right) = (-1.25t + 27.5) \text{ m/s}$$

When $t = 10$ s and 20 s,

$$v\big|_{t=10\text{ s}} = -1.25(10) + 27.5 = 15 \text{ m/s}$$

$$v\big|_{t=20\text{ s}} = -1.25(20) + 27.5 = 2.5 \text{ m/s}$$

The v–t graph is shown in Fig. a.

***a* – *t* Graph:** For the time interval $0 \le t < 10$ s,

$$(\overset{+}{\rightarrow}) \qquad a = \frac{dv}{dt} = \frac{d}{dt}\left(0.15t^2\right) = (0.3t) \text{ m/s}^2$$

When $t = 0$ s and 10 s,

$$a\big|_{t=0\text{ s}} = 0.3(0) = 0 \qquad\qquad a\big|_{t=10\text{ s}} = 0.3(10) = 3 \text{ m/s}^2$$

For the time interval $10 \text{ s} < t \le 20$ s,

$$(\overset{+}{\rightarrow}) \qquad a = \frac{dv}{dt} = \frac{d}{dt}(-1.25t + 27.5) = -1.25 \text{ m/s}^2$$

the a–t graph is shown in Fig. b.

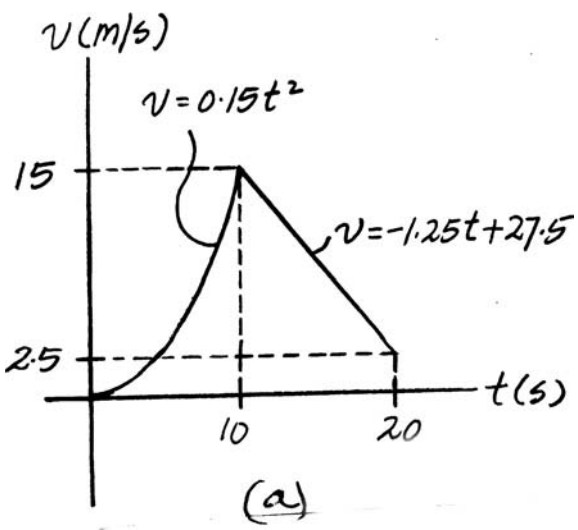

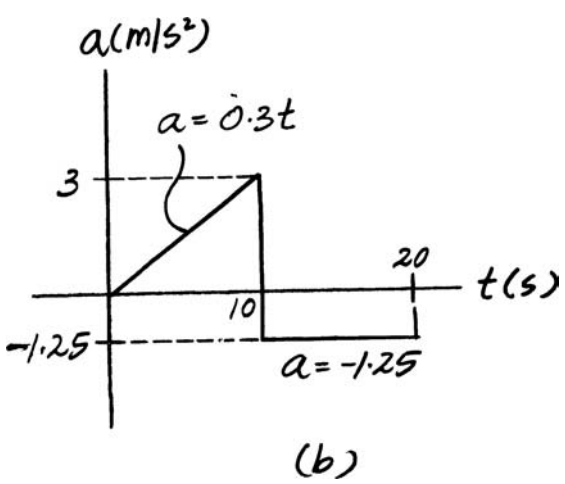

© 2010 Pearson Education, Inc., Upper Saddle River, NJ. All rights reserved. This material is protected under all copyright laws as they currently exist. No portion of this material may be reproduced, in any form or by any means, without permission in writing from the publisher.

•12–57. The dragster starts from rest and travels along a straight track with an acceleration-deceleration described by the graph. Construct the $v-s$ graph for $0 \le s \le s'$, and determine the distance s' traveled before the dragster again comes to rest.

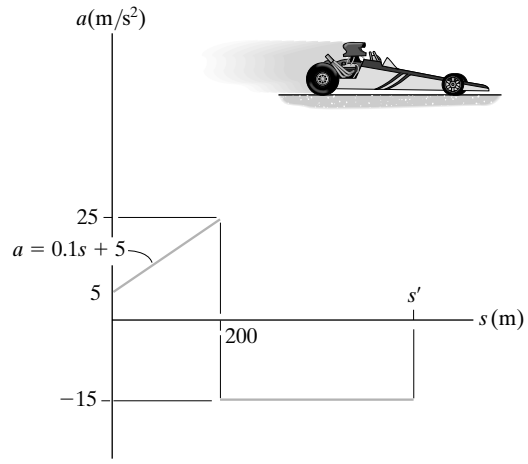

***v – s* Graph:** For $0 \le s < 200$ m, the initial condition is $v = 0$ at $s = 0$.

$(\overset{+}{\rightarrow})$ $\quad vdv = ads$

$$\int_0^v vdv = \int_0^s (0.1s + 5)ds$$

$$\left.\frac{v^2}{2}\right|_0^v = \left.\left(0.05s^2 + 5s\right)\right|_0^s$$

$$v = \left(\sqrt{0.1s^2 + 10s}\right) \text{ m/s}$$

At $s = 200$ m,

$$v\big|_{s=200\text{ m}} = \sqrt{0.1\left(200^2\right) + 10(200)} = 77.46 \text{ m/s} = 77.5 \text{ m/s}$$

For $200 \text{ m} < s \le s'$, the initial condition is $v = 77.46$ m/s at $s = 200$ m.

$(\overset{+}{\rightarrow})$ $\quad vdv = ads$

$$\int_{77.46\text{ m/s}}^v v\,dv = \int_{200\text{ m}}^s -15ds$$

$$\left.\frac{v^2}{2}\right|_{77.46\text{ m/s}}^v = -15s\big|_{200\text{ m}}^s$$

$$v = \left(\sqrt{-30s + 12000}\right) \text{ m/s}$$

When $v = 0$,

$$0 = \sqrt{-30s' + 12000} \qquad s' = 400 \text{ m} \qquad \textbf{Ans.}$$

The v–s graph is shown in Fig. a.

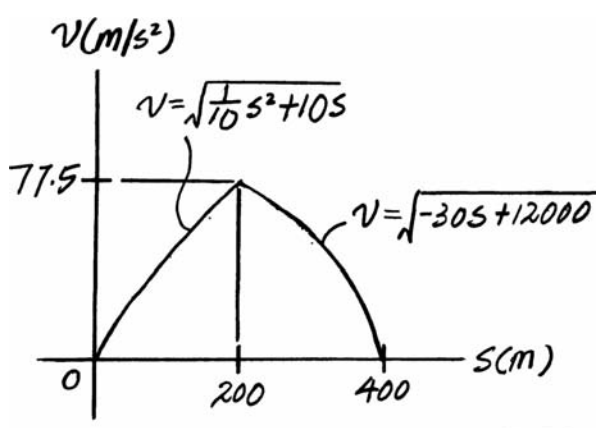

(a)

© 2010 Pearson Education, Inc., Upper Saddle River, NJ. All rights reserved. This material is protected under all copyright laws as they currently exist. No portion of this material may be reproduced, in any form or by any means, without permission in writing from the publisher.

12–58. A sports car travels along a straight road with an acceleration-deceleration described by the graph. If the car starts from rest, determine the distance s' the car travels until it stops. Construct the $v-s$ graph for $0 \le s \le s'$.

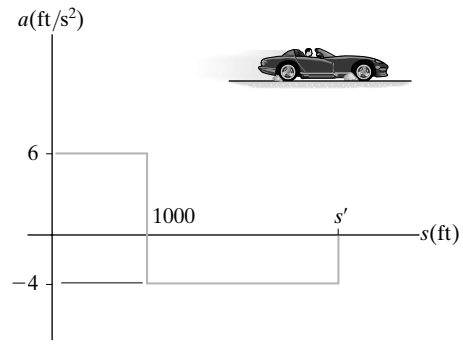

***v − s* Graph:** For $0 \le s < 1000$ ft, the initial condition is $v = 0$ at $s = 0$.

$(\overset{+}{\rightarrow})$ $\quad vdv = ads$

$$\int_0^v vdv = \int_0^s 6ds$$

$$\frac{v^2}{2} = 6s$$

$$v = \left(\sqrt{12}s^{1/2}\right) \text{ ft/s}$$

When $s = 1000$ ft,

$$v = \sqrt{12}(1000)^{1/2} = 109.54 \text{ ft/s} = 110 \text{ ft/s}$$

For $1000 \text{ ft} < s \le s'$, the initial condition is $v = 109.54$ ft/s at $s = 1000$ ft.

$(\overset{+}{\rightarrow})$ $\quad vdv = ads$

$$\int_{109.54 \text{ ft/s}}^{v} vdv = \int_{1000 \text{ ft}}^{s} -4ds$$

$$\left.\frac{v^2}{2}\right|_{109.54 \text{ ft/s}}^{v} = -4s\Big|_{1000 \text{ ft}}^{s}$$

$$v = \left(\sqrt{20\,000 - 8s}\right) \text{ ft/s}$$

When $v = 0$,

$$0 = \sqrt{20\,000 - 8s'} \qquad s' = 2500 \text{ ft} \qquad \textbf{Ans.}$$

The v–s graph is shown in Fig. a.

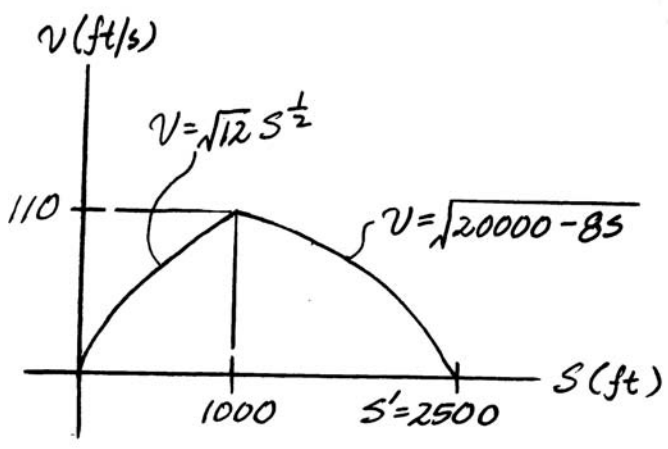

(a)

© 2010 Pearson Education, Inc., Upper Saddle River, NJ. All rights reserved. This material is protected under all copyright laws as they currently exist. No portion of this material may be reproduced, in any form or by any means, without permission in writing from the publisher.

12–59. A missile starting from rest travels along a straight track and for 10 s has an acceleration as shown. Draw the $v-t$ graph that describes the motion and find the distance traveled in 10 s.

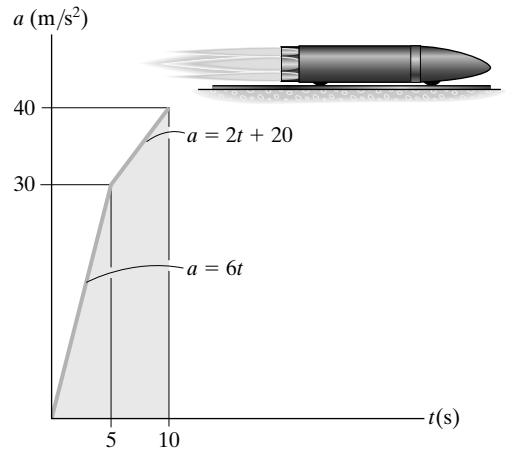

For $t \leq 5$ s,

$$a = 6t$$

$$dv = a\,dt$$

$$\int_0^v dv = \int_0^t 6t\,dt$$

$$v = 3t^2$$

When $t = 5$ s,

$$v = 75 \text{ m/s}$$

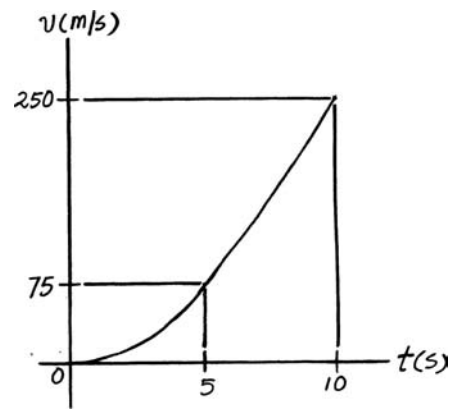

For $5 < t < 10$ s,

$$a = 2t + 20$$

$$dv = a\,dt$$

$$\int_{75}^v dv = \int_5^t (2t + 20)\,dt$$

$$v - 75 = t^2 + 20t - 125$$

$$v = t^2 + 20t - 50$$

When $t = 10$ s,

$$v = 250 \text{ m/s}$$

Distance at $t = 5$ s:

$$ds = v\,dt$$

$$\int_0^s ds = \int_0^5 3t^2\,dt$$

$$s = (5)^3 = 125 \text{ m}$$

Distance at $t = 10$ s:

$$ds = v\,dv$$

$$\int_{125}^s ds = \int_5^{10} \left(t^2 + 20t - 50\right) dt$$

$$s - 125 = \frac{1}{3}t^3 + 10t^2 - 50t \Big]_5^{10}$$

$$s = 917 \text{ m}$$ **Ans.**

© 2010 Pearson Education, Inc., Upper Saddle River, NJ. All rights reserved. This material is protected under all copyright laws as they currently exist. No portion of this material may be reproduced, in any form or by any means, without permission in writing from the publisher.

***12–60.** A motorcyclist starting from rest travels along a straight road and for 10 s has an acceleration as shown. Draw the $v-t$ graph that describes the motion and find the distance traveled in 10 s.

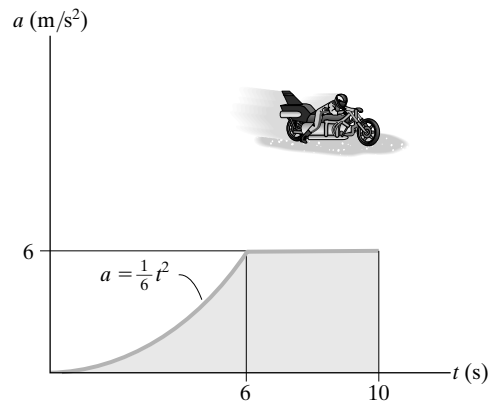

For $0 \le t < 6$ $\quad dv = a\,dt$

$$\int_0^v dv = \int_0^t \frac{1}{6}t^2\,dt$$

$$v = \frac{1}{18}t^3$$

$$ds = v\,dt$$

$$\int_0^s ds = \int_0^t \frac{1}{18}t^3\,dt$$

$$s = \frac{1}{72}t^4$$

When $t = 6$ s, $\quad v = 12$ m/s $\quad s = 18$ m

For $6 < t \le 10$ $\quad dv = a\,dt$

$$\int_{12}^v dv = \int_6^t 6\,dt$$

$$v = 6t - 24$$

$$ds = v\,dt$$

$$\int_{18}^s ds = \int_6^t (6t - 24)\,dt$$

$$s = 3t^2 - 24t + 54$$

When $t = 10$ s, $\quad v = 36$ m/s

$s = 114$ m **Ans.**

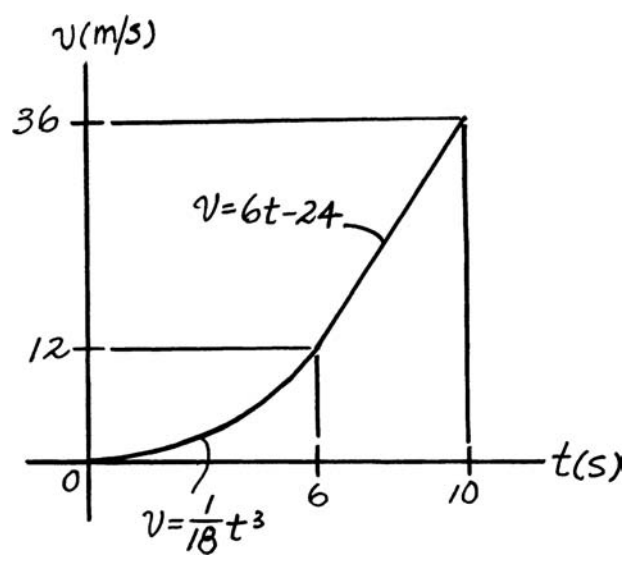

© 2010 Pearson Education, Inc., Upper Saddle River, NJ. All rights reserved. This material is protected under all copyright laws as they currently exist. No portion of this material may be reproduced, in any form or by any means, without permission in writing from the publisher.

•12–61. The $v-t$ graph of a car while traveling along a road is shown. Draw the $s-t$ and $a-t$ graphs for the motion.

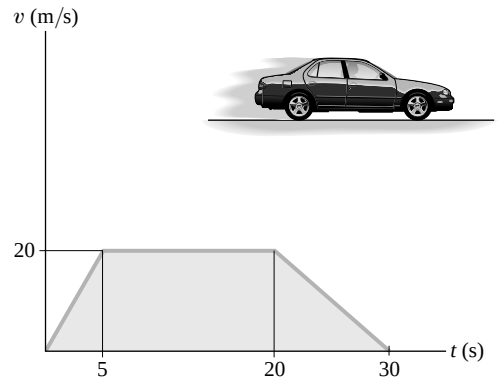

$0 \le t \le 5 \qquad a = \dfrac{\Delta v}{\Delta t} = \dfrac{20}{5} = 4 \text{ m/s}^2$

$5 \le t \le 20 \qquad a = \dfrac{\Delta v}{\Delta t} = \dfrac{20 - 20}{20 - 5} = 0 \text{ m/s}^2$

$20 \le t \le 30 \qquad a = \dfrac{\Delta v}{\Delta t} = \dfrac{0 - 20}{30 - 20} = -2 \text{ m/s}^2$

From the v–t graph at $t_1 = 5\ s$, $t_2 = 20\ s$, and $t_3 = 30$ s,

$s_1 = A_1 = \dfrac{1}{2}(5)(20) = 50 \text{ m}$

$s_2 = A_1 + A_2 = 50 + 20(20 - 5) = 350 \text{ m}$

$s_3 = A_1 + A_2 + A_3 = 350 + \dfrac{1}{2}(30 - 20)(20) = 450 \text{ m}$

The equations defining the portions of the s–t graph are

$0 \le t \le 5 \text{ s} \qquad v = 4t; \qquad ds = v\,dt; \qquad \int_0^s ds = \int_0^t 4t\,dt; \qquad s = 2t^2$

$5 \le t \le 20 \text{ s} \qquad v = 20; \qquad ds = v\,dt; \qquad \int_{50}^s ds = \int_5^t 20\,dt; \qquad s = 20t - 50$

$20 \le t \le 30 \text{ s} \qquad v = 2(30 - t); \qquad ds = v\,dt; \qquad \int_{350}^s ds = \int_{20}^t 2(30 - t)\,dt; \qquad s = -t^2 + 60t - 450$

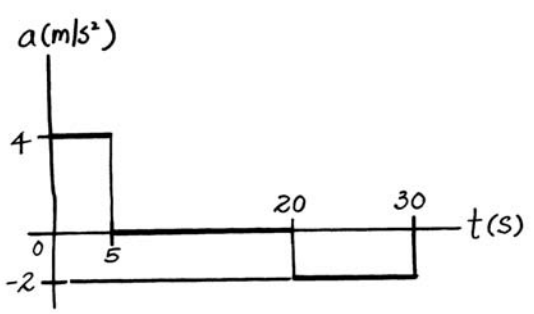

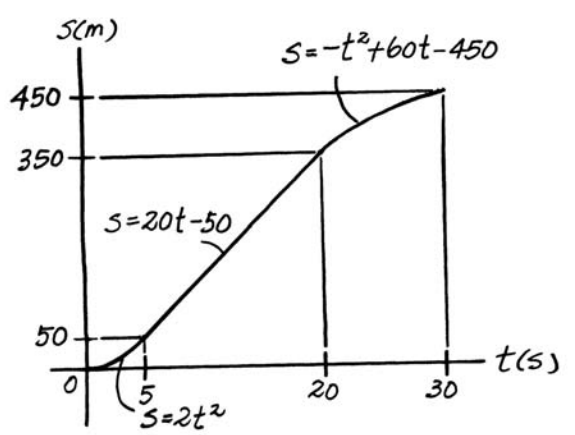

© 2010 Pearson Education, Inc., Upper Saddle River, NJ. All rights reserved. This material is protected under all copyright laws as they currently exist. No portion of this material may be reproduced, in any form or by any means, without permission in writing from the publisher.

12–62. The boat travels in a straight line with the acceleration described by the $a-s$ graph. If it starts from rest, construct the $v-s$ graph and determine the boat's maximum speed. What distance s' does it travel before it stops?

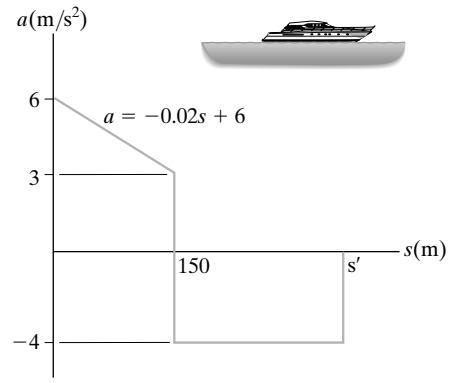

***v − s* Graph:** For $0 \le s < 150$ m, the initial condition is $v = 0$ at $s = 0$.

$(\overset{+}{\rightarrow})$ $\quad vdv = ads$

$$\int_0^v vdv = \int_0^s (-0.02s + 6)ds$$

$$\left.\frac{v^2}{2}\right|_0^v = \left(-0.01s^2 + 6s\right)\Big|_0^s$$

$$v = \left(\sqrt{-0.02s^2 + 12s}\right) \text{ m/s}$$

The maximum velocity of the boat occurs at $s = 150$ m, where its acceleration changes sign. Thus,

$$v_{max} = v\big|_{s=150\text{ m}} = \sqrt{-0.02\left(150^2\right) + 12(150)} = 36.74 \text{ m/s} = 36.7 \text{ m/s} \qquad \textbf{Ans.}$$

For $150 \text{ m} < s < s'$, the initial condition is $v = 36.74$ m/s at $s = 150$ m.

$(\overset{+}{\rightarrow})$ $\quad vdv = ads$

$$\int_{36.74\text{ m/s}}^v vdv = \int_{150\text{ m}}^s -4ds$$

$$\left.\frac{v^2}{2}\right|_{36.74\text{ m/s}}^v = -4s\Big|_{150\text{ m}}^s$$

$$v = \sqrt{-8s + 2550} \text{ m/s}$$

Thus, when $v = 0$,

$$0 = \sqrt{-8s' + 2550} \qquad s' = 318.7 \text{ m} = 319 \text{ m} \qquad \textbf{Ans.}$$

The v–s graph is shown in Fig. a.

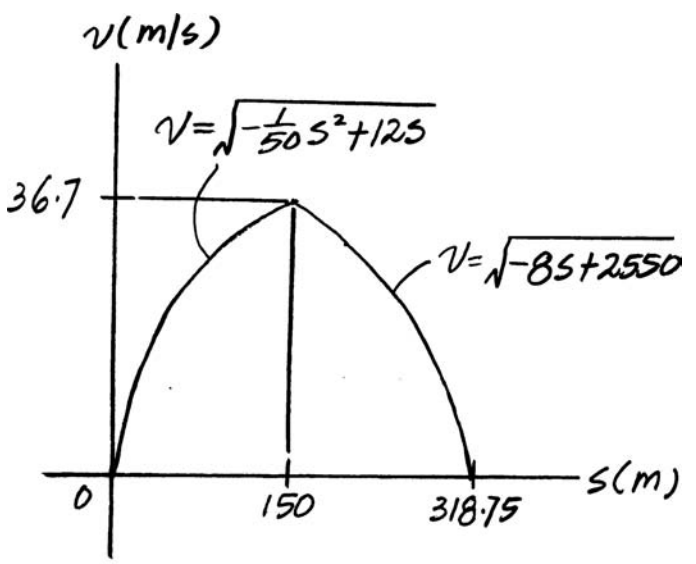

(a)

© 2010 Pearson Education, Inc., Upper Saddle River, NJ. All rights reserved. This material is protected under all copyright laws as they currently exist. No portion of this material may be reproduced, in any form or by any means, without permission in writing from the publisher.

12–63. The rocket has an acceleration described by the graph. If it starts from rest, construct the $v-t$ and $s-t$ graphs for the motion for the time interval $0 \le t \le 14\,\text{s}$.

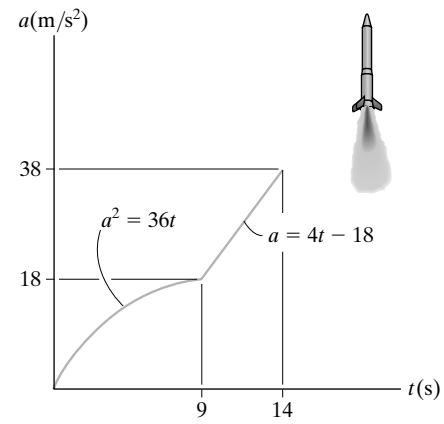

***v − t* Graph:** For the time interval $0 \le t < 9\,\text{s}$, the initial condition is $v = 0$ at $s = 0$.

$(+\uparrow)$ $\quad dv = a\,dt$

$$\int_0^v dv = \int_0^t 6t^{1/2}dt$$

$$v = \left(4t^{3/2}\right)\text{m/s}$$

When $t = 9\,\text{s}$,

$$v\big|_{t=9\,\text{s}} = 4\left(9^{3/2}\right) = 108\,\text{m/s}$$

The initial condition is $v = 108\,\text{m/s}$ at $t = 9\,\text{s}$.

$(+\uparrow)$ $\quad dv = a\,dt$

$$\int_{108\,\text{m/s}}^v dv = \int_{9\,\text{s}}^t (4t - 18)dt$$

$$v = \left(2t^2 - 18t + 108\right)\text{m/s}$$

When $t = 14\,\text{s}$,

$$v\big|_{t=14\,\text{s}} = 2\left(14^2\right) - 18(14) + 108 = 248\,\text{m/s}$$

The v–t graph is shown in Fig. a.

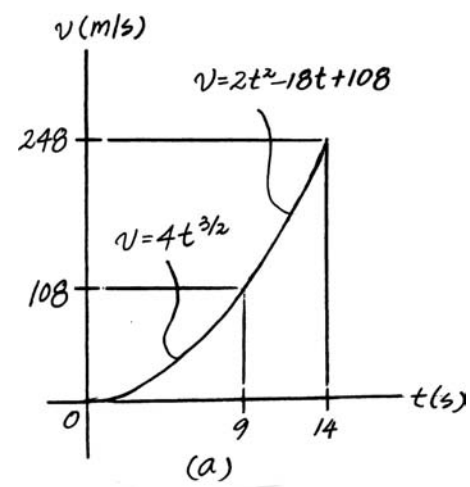

(a)

***s − t* Graph:** For the time interval $0 \le t < 9\,\text{s}$, the initial condition is $s = 0$ when $t = 0$.

$(+\uparrow)$ $\quad ds = v\,dt$

$$\int_0^s ds = \int_0^t 4t^{3/2}\,dt$$

$$s = \frac{8}{5}t^{5/2}$$

When $t = 9\,\text{s}$,

$$s\big|_{t=9\,\text{s}} = \frac{8}{5}\left(9^{5/2}\right) = 388.8\,\text{m}$$

For the time interval $9\,\text{s} < t \le 14\,\text{s}$, the initial condition is $s = 388.8\,\text{m}$ when $t = 9\,\text{s}$.

$(+\uparrow)$ $\quad ds = v\,dt$

$$\int_{388.8\,\text{m}}^s ds = \int_{9\,\text{s}}^t \left(2t^2 - 18t + 108\right)dt$$

$$s = \left(\frac{2}{3}t^3 - 9t^2 + 108t - 340.2\right)\text{m}$$

When $t = 14\,\text{s}$,

$$s\big|_{t=14\,\text{s}} = \frac{2}{3}\left(14^3\right) - 9\left(14^2\right) + 108(14) - 340.2 = 1237\,\text{m}$$

The s–t graph is shown in Fig. b.

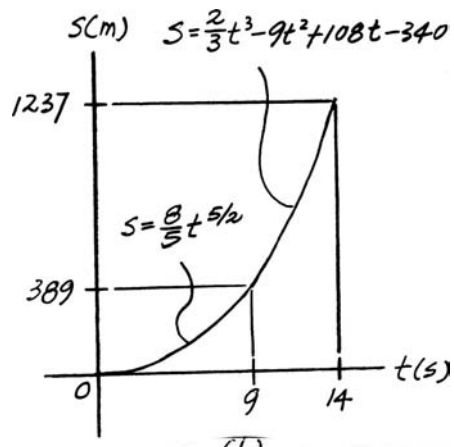

(b)

© 2010 Pearson Education, Inc., Upper Saddle River, NJ. All rights reserved. This material is protected under all copyright laws as they currently exist. No portion of this material may be reproduced, in any form or by any means, without permission in writing from the publisher.

***12–64.** The jet bike is moving along a straight road with the speed described by the $v-s$ graph. Construct the $a-s$ graph.

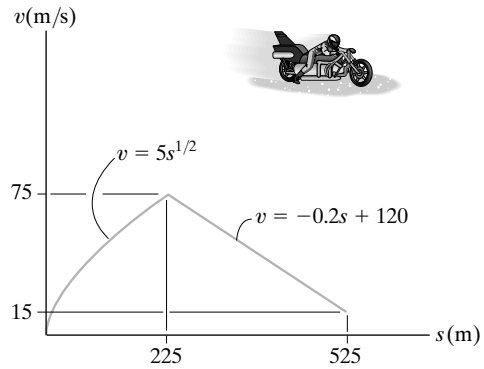

***a − s* Graph:** For $0 \le s < 225$ m,

$$(\overset{+}{\rightarrow}) \qquad a = v\frac{dv}{ds} = \left(5s^{1/2}\right)\left(\frac{5}{2}s^{-1/2}\right) = 12.5 \text{ m/s}^2$$

For 225 m $< s \le 525$ m,

$$(\overset{+}{\rightarrow}) \qquad a = v\frac{dv}{ds} = (-0.2s + 120)(-0.2) = (0.04s - 24) \text{ m/s}^2$$

At $s = 225$ m and 525 m,

$$a\big|_{s=225\text{ m}} = 0.04(225) - 24 = -15 \text{ m/s}^2$$

$$a\big|_{s=525\text{ m}} = 0.04(525) - 24 = -3 \text{ m/s}^2$$

The a–s graph is shown in Fig. a.

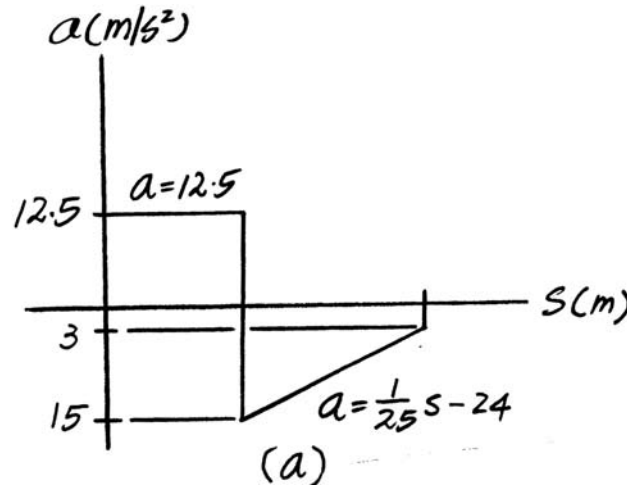

© 2010 Pearson Education, Inc., Upper Saddle River, NJ. All rights reserved. This material is protected under all copyright laws as they currently exist. No portion of this material may be reproduced, in any form or by any means, without permission in writing from the publisher.

•12–65. The acceleration of the speed boat starting from rest is described by the graph. Construct the $v-s$ graph.

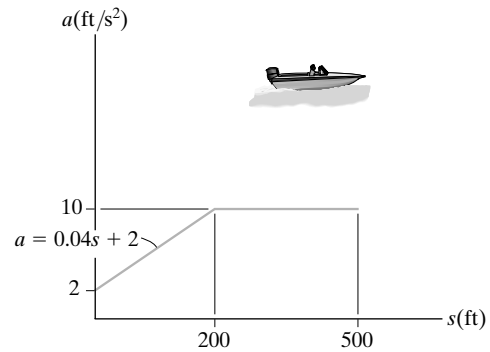

$v-s$ Graph: For $0 \le s < 200$ ft, the initial condition is $v = 0$ at $s = 0$.

$(\overset{+}{\rightarrow})$ $\quad vdv = ads$

$$\int_0^v vdv = \int_0^s (0.04s + 2)ds$$

$$\left.\frac{v^2}{2}\right|_0^v = 0.02s^2 + 2s\Big|_0^s$$

$$v = \sqrt{0.04s^2 + 4s}\ \text{ft/s}$$

At $s = 200$ ft,

$$v\Big|_{s=200\ \text{ft}} = \sqrt{0.04\left(200^2\right) + 4(200)} = 48.99\ \text{ft/s} = 49.0\ \text{ft/s}$$

For $200\ \text{ft} < s \le 500$ ft, the initial condition is $v = 48.99$ ft/s at $s = 200$ ft.

$(\overset{+}{\rightarrow})$ $\quad vdv = ads$

$$\int_{48.99\ \text{ft/s}}^v vdv = \int_{200\ \text{ft}}^s 10ds$$

$$\left.\frac{v^2}{2}\right|_{48.99\ \text{ft/s}}^v = 10s\Big|_{200\ \text{ft}}^s$$

$$v = \sqrt{20s - 1600}\ \text{ft/s}$$

At $s = 500$ ft,

$$v\Big|_{s=500\ \text{ft}} = \sqrt{20(500) - 1600} = 91.65\ \text{ft/s} = 91.7\ \text{ft/s}$$

The v–s graph is shown in Fig. a.

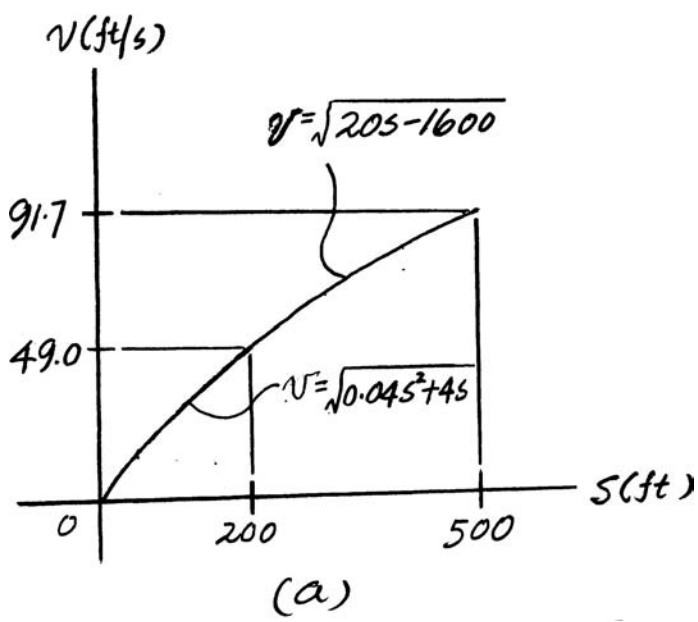

(a)

© 2010 Pearson Education, Inc., Upper Saddle River, NJ. All rights reserved. This material is protected under all copyright laws as they currently exist. No portion of this material may be reproduced, in any form or by any means, without permission in writing from the publisher.

12–66. The boat travels along a straight line with the speed described by the graph. Construct the $s-t$ and $a-s$ graphs. Also, determine the time required for the boat to travel a distance $s = 400$ m if $s = 0$ when $t = 0$.

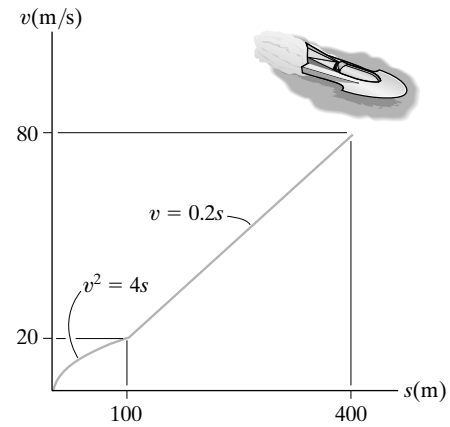

$s-t$ Graph: For $0 \le s < 100$ m, the initial condition is $s = 0$ when $t = 0$ s.

$(\overset{+}{\rightarrow})$
$$dt = \frac{ds}{v}$$
$$\int_0^t dt = \int_0^s \frac{ds}{2s^{1/2}}$$
$$t = s^{1/2}$$
$$s = \left(t^2\right) \text{ m}$$

When $s = 100$ m,

$$100 = t^2 \qquad t = 10 \text{ s}$$

For $100 < s \le 400$ m, the initial condition is $s = 100$ m when $t = 10$ s.

$(\overset{+}{\rightarrow})$
$$dt = \frac{ds}{v}$$
$$\int_{10\text{ s}}^t dt = \int_{100\text{ m}}^s \frac{ds}{0.2s}$$
$$t - 10 = 5\ln\frac{s}{100}$$
$$\frac{t}{5} - 2 = \ln\frac{s}{100}$$
$$e^{t/5-2} = \frac{s}{100}$$
$$\frac{e^{t/5}}{e^2} = \frac{s}{100}$$
$$s = \left(13.53e^{t/5}\right) \text{ m}$$

When $s = 400$ m,

$$400 = 13.53e^{t/5}$$
$$t = 16.93 \text{ s} = 16.9 \text{ s}$$ **Ans.**

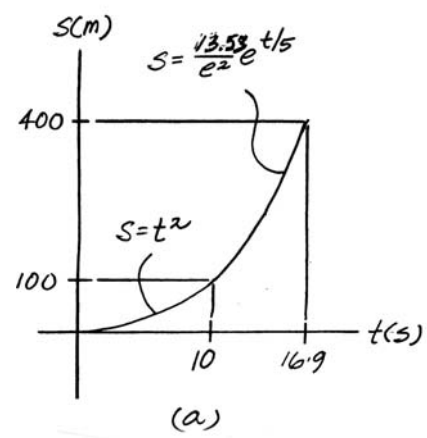

(a)

The s–t graph is shown in Fig. a.

$a-s$ Graph: For $0 \text{ m} \le s < 100$ m,

$$a = v\frac{dv}{ds} = \left(2s^{1/2}\right)\left(s^{-1/2}\right) = 2 \text{ m/s}^2$$

For $100 \text{ m} < s \le 400$ m,

$$a = v\frac{dv}{ds} = (0.2s)(0.2) = 0.04s$$

When $s = 100$ m and 400 m,

$$a\big|_{s=100\text{ m}} = 0.04(100) = 4 \text{ m/s}^2$$
$$a\big|_{s=400\text{ m}} = 0.04(400) = 16 \text{ m/s}^2$$

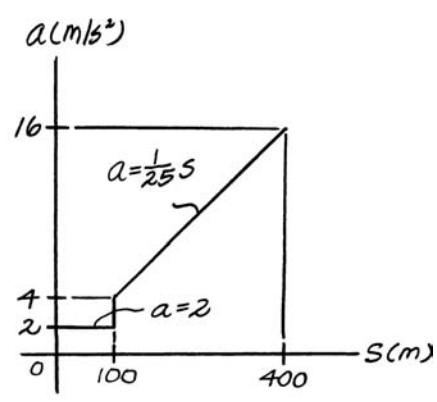

(b)

The a–s graph is shown in Fig. b.

© 2010 Pearson Education, Inc., Upper Saddle River, NJ. All rights reserved. This material is protected under all copyright laws as they currently exist. No portion of this material may be reproduced, in any form or by any means, without permission in writing from the publisher.

12–67. The s–t graph for a train has been determined experimentally. From the data, construct the v–t and a–t graphs for the motion.

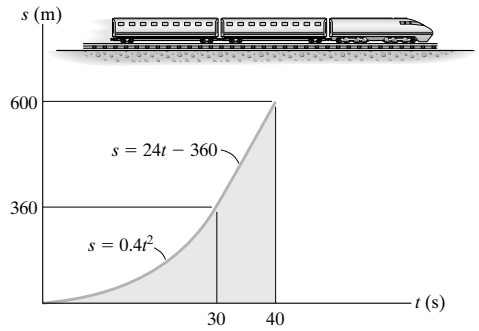

***v – t* Graph:** The velocity in terms of time t can be obtained by applying $v = \frac{ds}{dt}$. For time interval $0\text{ s} \le t \le 30\text{ s}$,

$$v = \frac{ds}{dt} = 0.8t$$

When $t = 30\text{ s}$, $\quad v = 0.8(30) = 24.0\text{ m/s}$

For time interval $30\text{ s} < t \le 40\text{ s}$,

$$v = \frac{ds}{dt} = 24.0\text{ m/s}$$

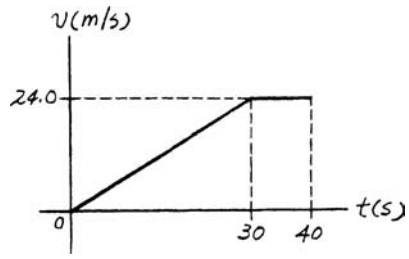

***a – t* Graph:** The acceleration in terms of time t can be obtained by applying $a = \frac{dv}{dt}$.

For time interval $0\text{ s} \le t < 30\text{ s}$ and $30\text{ s} < t \le 40\text{ s}$, $a = \frac{dv}{dt} = 0.800\text{ m/s}^2$ and $a = \frac{dv}{dt} = 0$, respectively.

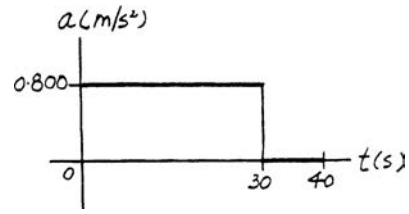

© 2010 Pearson Education, Inc., Upper Saddle River, NJ. All rights reserved. This material is protected under all copyright laws as they currently exist. No portion of this material may be reproduced, in any form or by any means, without permission in writing from the publisher.

***12–68.** The airplane lands at 250 ft/s on a straight runway and has a deceleration described by the graph. Determine the distance s' traveled before its speed is decreased to 25 ft/s. Draw the $s-t$ graph.

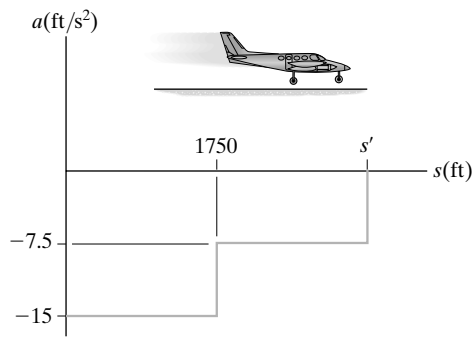

***v* – *s* Graph:** For $0 \le s < 1750$ ft, the initial condition is $v = 250$ ft/s at $s = 0$ s.

$(\overset{+}{\rightarrow})$ $\quad vdv = ads$

$$\int_{250\text{ ft/s}}^{v} vdv = \int_{0}^{s} -15ds$$

$$\left.\frac{v^2}{2}\right|_{250\text{ ft/s}}^{v} = -15s\Big|_{0}^{s}$$

$$v = \left(\sqrt{62\,500 - 30s}\right)\text{ ft/s}$$

At $s = 1750$ ft,

$$v\Big|_{s=1750\text{ ft}} = \sqrt{62\,500 - 30(1750)} = 100\text{ ft/s}$$

For $1750\text{ ft} < s < s'$, the initial condition is $v = 100$ ft/s at $s = 1750$ ft.

$(\overset{+}{\rightarrow})$ $\quad vdv = ads$

$$\int_{100\text{ ft/s}}^{v} vdv = \int_{1750\text{ ft}}^{s} -7.5ds$$

$$\left.\frac{v^2}{2}\right|_{100\text{ ft/s}}^{v} = (-7.5s)\Big|_{1750\text{ ft}}^{s}$$

$$v = \sqrt{36\,250 - 15s}$$

When $v = 25$ ft/s

$$25 = \sqrt{36\,250 - 15s}$$

$$s' = 2375\text{ ft}$$ **Ans.**

The v–s graph is shown in Fig. a.

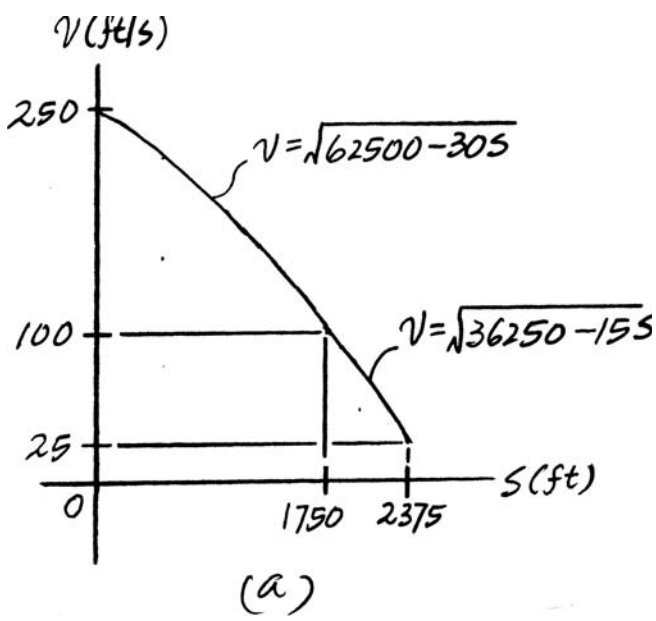

© 2010 Pearson Education, Inc., Upper Saddle River, NJ. All rights reserved. This material is protected under all copyright laws as they currently exist. No portion of this material may be reproduced, in any form or by any means, without permission in writing from the publisher.

•12–69. The airplane travels along a straight runway with an acceleration described by the graph. If it starts from rest and requires a velocity of 90 m/s to take off, determine the minimum length of runway required and the time t' for take off. Construct the $v-t$ and $s-t$ graphs.

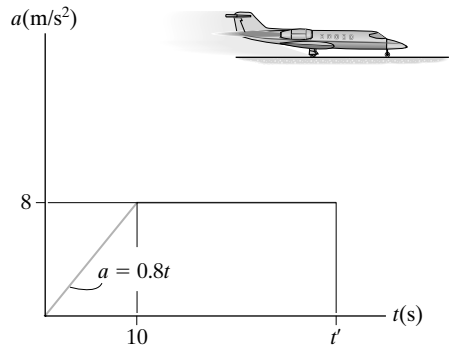

***v – t* graph:** For the time interval $0 \le t < 10$ s, the initial condition is $v = 0$ when $t = 0$ s.

$(\overset{+}{\rightarrow})$ $$dv = adt$$

$$\int_0^v dv = \int_0^t 0.8t dt$$

$$v = \left(0.4t^2\right) \text{ m/s}$$

When $t = 10$ s,

$$v = 0.4\left(10^2\right) = 40 \text{ m/s}$$

For the time interval $10 \text{ s} < t \le t'$, the initial condition is $v = 40$ m/s when $t = 10$ s.

$(\overset{+}{\rightarrow})$ $$dv = adt$$

$$\int_{40 \text{ m/s}}^v dv = \int_{10 \text{ s}}^t 8dt$$

$$v\Big|_{40 \text{ m/s}}^v = 8t\Big|_{10 \text{ s}}^t$$

$$v = (8t - 40) \text{ m/s}$$

Thus, when $v = 90$ m/s,

$$90 = 8t' - 40 \qquad t' = 16.25 \text{ s}$$ **Ans.**

Also, the change in velocity is equal to the area under the $a-t$ graph. Thus,

$$\Delta v = \int adt$$

$$90 - 0 = \frac{1}{2}(8)(10) + 8(t' - 10)$$

$$t' = 16.25 \text{ s}$$ **Ans.**

The v–t graph is shown in Fig. a.

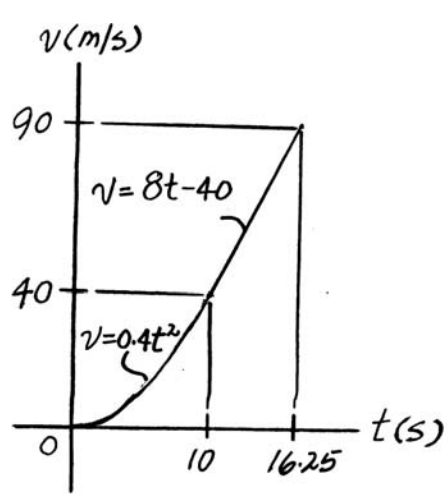

(a)

© 2010 Pearson Education, Inc., Upper Saddle River, NJ. All rights reserved. This material is protected under all copyright laws as they currently exist. No portion of this material may be reproduced, in any form or by any means, without permission in writing from the publisher.

***s – t* Graph:** For the time interval $0 \le t < 10$ s, the initial condition is $s = 0$ when $t = 0$ s.

$(\overset{+}{\rightarrow})$ $$ds = vdt$$

$$\int_0^s ds = \int_0^t 0.4t^2 dt$$

$$s = \left(0.1333t^3\right) \text{ m}$$

When $t = 10$ s,

$$s\big|_{t=10\text{ s}} = 0.1333\left(10^3\right) = 133.33\text{m}$$

For the time interval $10 \text{ s} < t \le t' = 16.25$ s, the initial condition is $s = 133.33$m when $t = 10$ s.

$(\overset{+}{\rightarrow})$ $$ds = vdt$$

$$\int_{133.33\text{ m}}^s ds = \int_{10\text{s}}^t (8t - 40)dt$$

$$s\big|_{133.33\text{ m}}^s = \left(4t^2 - 40t\right)\Big|_{10\text{ s}}^t$$

$$s = \left(4t^2 - 40t + 133.33\right)\text{m}$$

When $t = t' = 16.25$ s

$$s\big|_{t=16.25\text{ s}} = 4(16.25)^2 - 40(16.25) + 133.33 = 539.58 \text{ m} = 540 \text{ m} \quad \textbf{Ans.}$$

The *s–t* graph is shown in Fig. *b*.

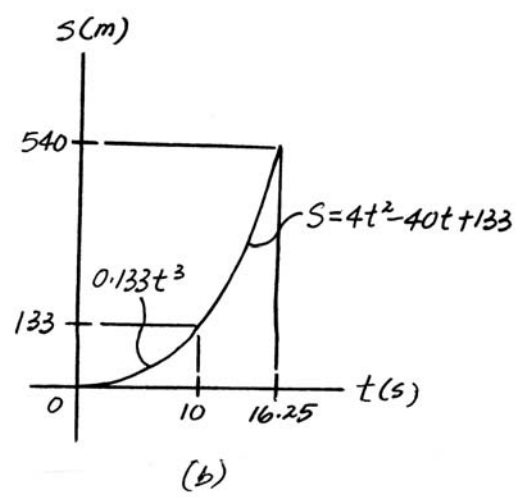

(b)

© 2010 Pearson Education, Inc., Upper Saddle River, NJ. All rights reserved. This material is protected under all copyright laws as they currently exist. No portion of this material may be reproduced, in any form or by any means, without permission in writing from the publisher.

12–70. The a–t graph of the bullet train is shown. If the train starts from rest, determine the elapsed time t' before it again comes to rest. What is the total distance traveled during this time interval? Construct the v–t and s–t graphs.

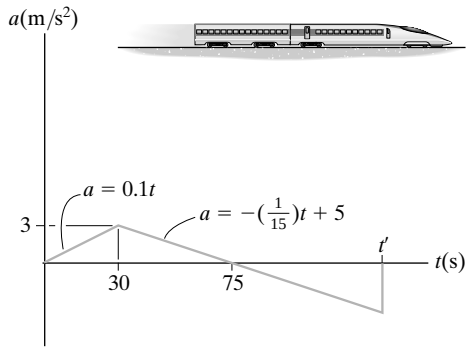

***v* − *t* Graph:** For the time interval $0 \le t < 30$ s, the initial condition is $v = 0$ when $t = 0$ s.

$$(\overset{+}{\rightarrow}) \qquad dv = adt$$

$$\int_0^v dv = \int_0^t 0.1t\,dt$$

$$v = \left(0.05t^2\right) \text{ m/s}$$

When $t = 30$ s,

$$v\big|_{t=30\text{ s}} = 0.05\left(30^2\right) = 45 \text{ m/s}$$

For the time interval $30 \text{ s} < t \le t'$, the initial condition is $v = 45$ m/s at $t = 30$ s.

$$(\overset{+}{\rightarrow}) \qquad dv = adt$$

$$\int_{45\text{ m/s}}^v dv = \int_{30\text{ s}}^t \left(-\frac{1}{15}t + 5\right)dt$$

$$v = \left(-\frac{1}{30}t^2 + 5t - 75\right) \text{ m/s}$$

Thus, when $v = 0$,

$$0 = -\frac{1}{30}t'^2 + 5t' - 75$$

Choosing the root $t' > 75$ s,

$$t' = 133.09 \text{ s} = 133 \text{ s} \qquad \textbf{Ans.}$$

Also, the change in velocity is equal to the area under the a–t graph. Thus,

$$\Delta v = \int a\,dt$$

$$0 = \frac{1}{2}(3)(75) + \frac{1}{2}\left[\left(-\frac{1}{15}t' + 5\right)(t' - 75)\right]$$

$$0 = -\frac{1}{30}t'^2 + 5t' - 75$$

© 2010 Pearson Education, Inc., Upper Saddle River, NJ. All rights reserved. This material is protected under all copyright laws as they currently exist. No portion of this material may be reproduced, in any form or by any means, without permission in writing from the publisher.

This equation is the same as the one obtained previously.

The slope of the v–t graph is zero when $t = 75$ s, which is the instant $a = \frac{dv}{dt} = 0$. Thus,

$$v\big|_{t=75\text{ s}} = -\frac{1}{30}\left(75^2\right) + 5(75) - 75 = 112.5\text{ m/s}$$

The v–t graph is shown in Fig. a.

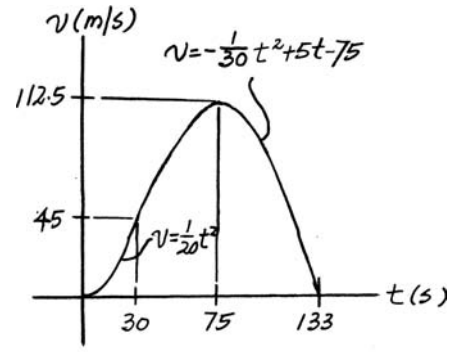

(a)

$s - t$ Graph: Using the result of v, the equation of the s–t graph can be obtained by integrating the kinematic equation $ds = vdt$. For the time interval $0 \le t < 30$ s, the initial condition $s = 0$ at $t = 0$ s will be used as the integration limit. Thus,

$(\overset{+}{\rightarrow})$ $\quad ds = vdt$

$$\int_0^s ds = \int_0^t 0.05t^2\,dt$$

$$s = \left(\frac{1}{60}t^3\right)\text{ m}$$

When $t = 30$ s,

$$s\big|_{t=30\text{ s}} = \frac{1}{60}\left(30^3\right) = 450\text{ m}$$

For the time interval $30\text{ s} < t \le t' = 133.09$ s, the initial condition is $s = 450$ m when $t = 30$ s.

$(\overset{+}{\rightarrow})$ $\quad ds = vdt$

$$\int_{450\text{ m}}^s ds = \int_{30\text{ s}}^t \left(-\frac{1}{30}t^2 + 5t - 75\right)dt$$

$$s = \left(-\frac{1}{90}t^3 + \frac{5}{2}t^2 - 75t + 750\right)\text{ m}$$

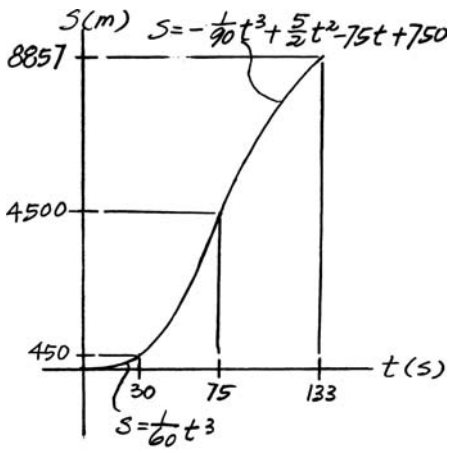

(b)

When $t = 75$ s and $t' = 133.09$ s,

$$s\big|_{t=75\text{ s}} = -\frac{1}{90}\left(75^3\right) + \frac{5}{2}\left(75^2\right) - 75(75) + 750 = 4500\text{ m}$$

$$s\big|_{t=133.09\text{ s}} = -\frac{1}{90}\left(133.09^3\right) + \frac{5}{2}\left(133.09^2\right) - 75(133.09) + 750 = 8857\text{ m} \qquad \textbf{Ans.}$$

The s–t graph is shown in Fig. b.

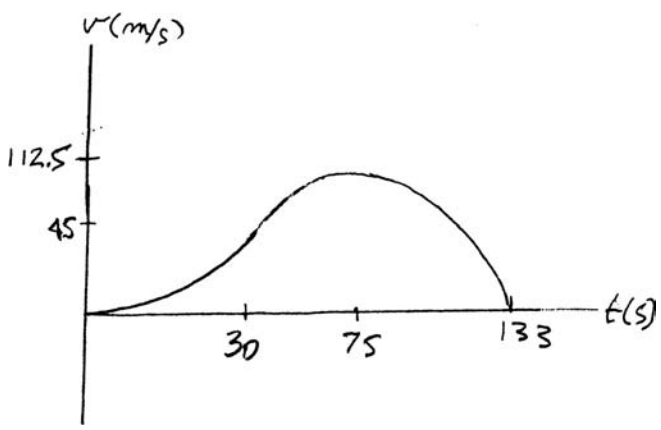

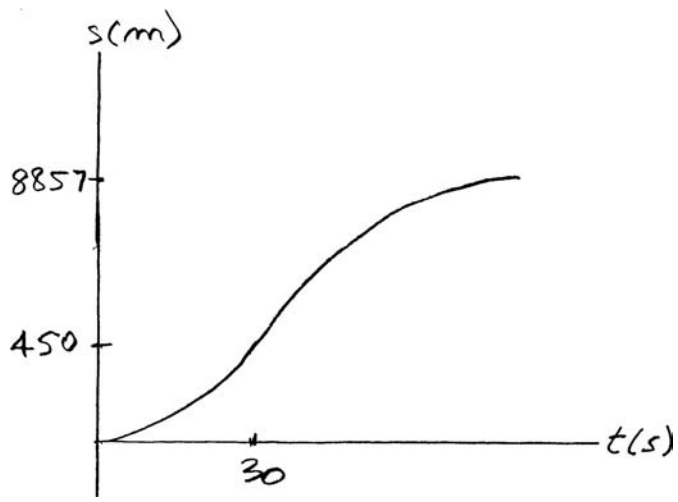

© 2010 Pearson Education, Inc., Upper Saddle River, NJ. All rights reserved. This material is protected under all copyright laws as they currently exist. No portion of this material may be reproduced, in any form or by any means, without permission in writing from the publisher.

12–71. The position of a particle is $\mathbf{r} = \{(3t^3 - 2t)\mathbf{i} - (4t^{1/2} + t)\mathbf{j} + (3t^2 - 2)\mathbf{k}\}$ m, where t is in seconds. Determine the magnitude of the particle's velocity and acceleration when $t = 2$ s.

Velocity:

$$\mathbf{v} = \frac{d\mathbf{r}}{dt} = \frac{d}{dt}\left[\left(3t^3 - 2t\right)\mathbf{i} - \left(4t^{1/2} + t\right)\mathbf{j} + \left(3t^2 - 2\right)\mathbf{k}\right] = \left[\left(9t^2 - 2\right)\mathbf{i} - \left(2t^{-1/2} + 1\right)\mathbf{j} + (6t)\mathbf{k}\right] \text{m/s}$$

When $t = 2$ s,

$$\mathbf{v} = \left[\left[9\left(2^2\right) - 2\right]\mathbf{i} - \left[2\left(2^{-1/2}\right) + 1\right]\mathbf{j} + 6(2)\mathbf{k}\right] \text{m/s}$$

$$= [34\mathbf{i} - 2.414\mathbf{j} + 12\mathbf{k}] \text{ m/s}$$

Thus, the magnitude of the particle's velocity is

$$v = \sqrt{{v_x}^2 + {v_y}^2 + {v_z}^2} = \sqrt{34^2 + (-2.414)^2 + 12^2} = 36.1 \text{ m/s} \qquad \textbf{Ans.}$$

Acceleration:

$$\mathbf{a} = \frac{d\mathbf{v}}{dt} = \frac{d}{dt}\left[\left(9t^2 - 2\right)\mathbf{i} - \left(2t^{-1/2} + 1\right)\mathbf{j} + (6t)\mathbf{k}\right] \text{m/s} = \left[(18t)\mathbf{i} + t^{-3/2}\mathbf{j} + 6\mathbf{k}\right] \text{m/s}^2$$

When $t = 2$ s,

$$\mathbf{a} = \left[18(2)\mathbf{i} + 2^{-3/2}\mathbf{j} + 6\mathbf{k}\right] \text{m/s}^2 = [36\mathbf{i} + 0.3536\mathbf{j} + 6\mathbf{k}] \text{ m/s}^2$$

Thus, the magnitude of the particle's acceleration is

$$a = \sqrt{{a_x}^2 + {a_y}^2 + {a_z}^2} = \sqrt{36^2 + 0.3536^2 + 6^2} = 36.5 \text{ m/s}^2 \qquad \textbf{Ans.}$$

***12–72.** The velocity of a particle is $\mathbf{v} = \{3\mathbf{i} + (6 - 2t)\mathbf{j}\}$ m/s, where t is in seconds. If $\mathbf{r} = \mathbf{0}$ when $t = 0$, determine the displacement of the particle during the time interval $t = 1$ s to $t = 3$ s.

Position: The position $\mathbf{r}$ of the particle can be determined by integrating the kinematic equation $d\mathbf{r} = \mathbf{v}dt$ using the initial condition $\mathbf{r} = \mathbf{0}$ at $t = 0$ as the integration limit. Thus,

$$d\mathbf{r} = \mathbf{v}dt$$

$$\int_0^{\mathbf{r}} d\mathbf{r} = \int_0^t \left[3\mathbf{i} + (6 - 2t)\mathbf{j}\right]dt$$

$$\mathbf{r} = \left[3t\mathbf{i} + \left(6t - t^2\right)\mathbf{j}\right] \text{m}$$

When $t = 1$ s and 3 s,

$$r\big|_{t=1\text{ s}} = 3(1)\mathbf{i} + \left[6(1) - 1^2\right]\mathbf{j} = [3\mathbf{i} + 5\mathbf{j}] \text{ m/s}$$

$$r\big|_{t=3\text{ s}} = 3(3)\mathbf{i} + \left[6(3) - 3^2\right]\mathbf{j} = [9\mathbf{i} + 9\mathbf{j}] \text{ m/s}$$

Thus, the displacement of the particle is

$$\Delta\mathbf{r} = \mathbf{r}\big|_{t=3\text{ s}} - \mathbf{r}\big|_{t=1\text{ s}}$$

$$= (9\mathbf{i} + 9\mathbf{j}) - (3\mathbf{i} + 5\mathbf{j})$$

$$= [6\mathbf{i} + 4\mathbf{j}] \text{ m} \qquad \textbf{Ans.}$$

© 2010 Pearson Education, Inc., Upper Saddle River, NJ. All rights reserved. This material is protected under all copyright laws as they currently exist. No portion of this material may be reproduced, in any form or by any means, without permission in writing from the publisher.

•12–73. A particle travels along the parabolic path $y = bx^2$. If its component of velocity along the y axis is $v_y = ct^2$, determine the x and y components of the particle's acceleration. Here b and c are constants.

Velocity:

$$dy = v_y\,dt$$

$$\int_0^{\mathbf{y}} dy = \int_0^t ct^2\,dt$$

$$y = \frac{c}{3}t^3$$

Substituting the result of y into $y = bx^2$,

$$\frac{c}{3}t^3 = bx^2$$

$$x = \sqrt{\frac{c}{3b}}\,t^{3/2}$$

Thus, the x component of the particle's velocity can be determined by taking the time derivative of x.

$$v_x = \dot{x} = \frac{d}{dt}\left[\sqrt{\frac{c}{3b}}\,t^{3/2}\right] = \frac{3}{2}\sqrt{\frac{c}{3b}}\,t^{1/2}$$

Acceleration:

$$a_x = \dot{v}_x = \frac{d}{dt}\left(\frac{3}{2}\sqrt{\frac{c}{3b}}t^{1/2}\right) = \frac{3}{4}\sqrt{\frac{c}{3b}}\,t^{-1/2} = \frac{3}{4}\sqrt{\frac{c}{3b}}\,\frac{1}{\sqrt{t}} \qquad \textbf{Ans.}$$

$$a_y = \dot{v}_y = \frac{d}{dt}\left(ct^2\right) = 2ct \qquad \textbf{Ans.}$$

© 2010 Pearson Education, Inc., Upper Saddle River, NJ. All rights reserved. This material is protected under all copyright laws as they currently exist. No portion of this material may be reproduced, in any form or by any means, without permission in writing from the publisher.

12–74. The velocity of a particle is given by $\mathbf{v} = \{16t^2\mathbf{i} + 4t^3\mathbf{j} + (5t + 2)\mathbf{k}\}$ m/s, where t is in seconds. If the particle is at the origin when $t = 0$, determine the magnitude of the particle's acceleration when $t = 2$ s. Also, what is the x, y, z coordinate position of the particle at this instant?

Acceleration: The acceleration expressed in Cartesian vector form can be obtained by applying Eq. 12–9.

$$\mathbf{a} = \frac{d\mathbf{v}}{dt} = \{32t\mathbf{i} + 12t^2\mathbf{j} + 5\mathbf{k}\}\ \text{m/s}^2$$

When $t = 2$ s, $\mathbf{a} = 32(2)\mathbf{i} + 12\left(2^2\right)\mathbf{j} + 5\mathbf{k} = \{64\mathbf{i} + 48\mathbf{j} + 5\mathbf{k}\}$ m/s^2. The magnitude of the acceleration is

$$a = \sqrt{a_x^2 + a_y^2 + a_z^2} = \sqrt{64^2 + 48^2 + 5^2} = 80.2\ \text{m/s}^2 \qquad \textbf{Ans.}$$

Position: The position expressed in Cartesian vector form can be obtained by applying Eq. 12–7.

$$d\mathbf{r} = \mathbf{v}\,dt$$

$$\int_0^{\mathbf{r}} d\mathbf{r} = \int_0^t \left(16t^2\mathbf{i} + 4t^3\mathbf{j} + (5t + 2)\mathbf{k}\right) dt$$

$$\mathbf{r} = \left[\frac{16}{3}t^3\mathbf{i} + t^4\mathbf{j} + \left(\frac{5}{2}t^2 + 2t\right)\mathbf{k}\right]\text{m}$$

When $t = 2$ s,

$$\mathbf{r} = \frac{16}{3}\left(2^3\right)\mathbf{i} + \left(2^4\right)\mathbf{j} + \left[\frac{5}{2}\left(2^2\right) + 2(2)\right]\mathbf{k} = \{42.7\mathbf{i} + 16.0\mathbf{j} + 14.0\mathbf{k}\}\ \text{m}.$$

Thus, the coordinate of the particle is

$$(42.7, 16.0, 14.0)\ \text{m} \qquad \textbf{Ans.}$$

© 2010 Pearson Education, Inc., Upper Saddle River, NJ. All rights reserved. This material is protected under all copyright laws as they currently exist. No portion of this material may be reproduced, in any form or by any means, without permission in writing from the publisher.

12–75. A particle travels along the circular path $x^2 + y^2 = r^2$. If the y component of the particle's velocity is $v_y = 2r \cos 2t$, determine the x and y components of its acceleration at any instant.

Velocity:

$$dy = v_y\, dt$$

$$\int_0^{\mathbf{y}} dy = \int_0^t 2r \cos 2t dt$$

$$y = r \sin 2t$$

Substituting this result into $x^2 + y^2 = r^2$, we obtain

$$x^2 + r^2 \sin^2 2t = r^2$$

$$x^2 = r^2\left(1 - \sin^2 2t\right)$$

$$x = \mp r \cos 2t$$

Thus,

$$v_x = \dot{x} = \frac{d}{dt}(\mp r \cos 2t) = \mp 2r \sin 2t$$

Acceleration:

$$a_x = \dot{v}_x = \frac{d}{dt}(\mp 2r \sin 2t) = \mp 4r \cos 2t \qquad \textbf{Ans.}$$

$$a_y = \dot{v}_y = \frac{d}{dt}(2r \cos 2t) = -4r \sin 2t \qquad \textbf{Ans.}$$

© 2010 Pearson Education, Inc., Upper Saddle River, NJ. All rights reserved. This material is protected under all copyright laws as they currently exist. No portion of this material may be reproduced, in any form or by any means, without permission in writing from the publisher.

***12–76.** The box slides down the slope described by the equation $y = (0.05x^2)$ m, where x is in meters. If the box has x components of velocity and acceleration of $v_x = -3$ m/s and $a_x = -1.5$ m/s^2 at $x = 5$ m, determine the y components of the velocity and the acceleration of the box at this instant.

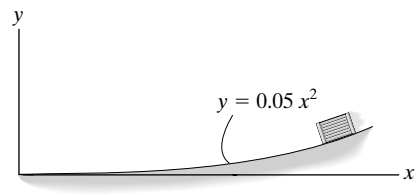

Velocity: The x and y components of the box's velocity can be related by taking the first time derivative of the path's equation using the chain rule.

$$y = 0.05x^2$$

$$\dot{y} = 0.1x\dot{x}$$

or

$$v_y = 0.1xv_x$$

At $x = 5$ m, $v_x = -3$ m/s. Thus,

$$v_y = 0.1(5)(-3) = -1.5 \text{ m/s} = 1.5 \text{ m/s} \downarrow \qquad \textbf{Ans.}$$

Acceleration: The x and y components of the box's acceleration can be obtained by taking the second time derivative of the path's equation using the chain rule.

$$\bar{y} = 0.1[\dot{x}\dot{x} + x\bar{x}] = 0.1\left(\dot{x}^2 + x\bar{x}\right)$$

or

$$a_y = 0.1\left(v_x{}^2 + xa_x\right)$$

At $x = 5$ m, $v_x = -3$ m/s and $a_x = -1.5$ m/s^2. Thus,

$$a_y = 0.1\left[(-3)^2 + 5(-1.5)\right] = 0.15 \text{ m/s}^2 \uparrow \qquad \textbf{Ans.}$$

© 2010 Pearson Education, Inc., Upper Saddle River, NJ. All rights reserved. This material is protected under all copyright laws as they currently exist. No portion of this material may be reproduced, in any form or by any means, without permission in writing from the publisher.

•12–77. The position of a particle is defined by $\mathbf{r} = \{5\cos 2t\,\mathbf{i} + 4\sin 2t\,\mathbf{j}\}$ m, where t is in seconds and the arguments for the sine and cosine are given in radians. Determine the magnitudes of the velocity and acceleration of the particle when $t = 1$ s. Also, prove that the path of the particle is elliptical.

Velocity: The velocity expressed in Cartesian vector form can be obtained by applying Eq. 12–7.

$$\mathbf{v} = \frac{d\mathbf{r}}{dt} = \{-10\sin 2t\mathbf{i} + 8\cos 2t\mathbf{j}\}\text{ m/s}$$

When $t = 1$ s, $\mathbf{v} = -10\sin 2(1)\mathbf{i} + 8\cos 2(1)\mathbf{j} = \{-9.093\mathbf{i} - 3.329\mathbf{j}\}$ m/s. Thus, the magnitude of the velocity is

$$v = \sqrt{v_x^2 + v_y^2} = \sqrt{(-9.093)^2 + (-3.329)^2} = 9.68\text{ m/s} \qquad \textbf{Ans.}$$

Acceleration: The acceleration expressed in Cartesian vector from can be obtained by applying Eq. 12–9.

$$\mathbf{a} = \frac{d\mathbf{v}}{dt} = \{-20\cos 2t\mathbf{i} - 16\sin 2t\mathbf{j}\}\text{ m/s}^2$$

When $t = 1$ s, $\mathbf{a} = -20\cos 2(1)\mathbf{i} - 16\sin 2(1)\mathbf{j} = \{8.323\mathbf{i} - 14.549\mathbf{j}\}$ m/s^2. Thus, the magnitude of the acceleration is

$$a = \sqrt{a_x^2 + a_y^2} = \sqrt{8.323^2 + (-14.549)^2} = 16.8\text{ m/s}^2 \qquad \textbf{Ans.}$$

Traveling Path: Here, $x = 5\cos 2t$ and $y = 4\sin 2t$. Then,

$$\frac{x^2}{25} = \cos^2 2t \qquad \textbf{[1]}$$

$$\frac{y^2}{16} = \sin^2 2t \qquad \textbf{[2]}$$

Adding Eqs [1] and [2] yields

$$\frac{x^2}{25} + \frac{y^2}{16} = \cos^2 2t + \sin^2 2t$$

However, $\cos^2 2t + \sin^2 2t = 1$. Thus,

$$\frac{x^2}{25} + \frac{y^2}{16} = 1 \qquad \textbf{(Equation of an Ellipse) (Q.E.D.)}$$

© 2010 Pearson Education, Inc., Upper Saddle River, NJ. All rights reserved. This material is protected under all copyright laws as they currently exist. No portion of this material may be reproduced, in any form or by any means, without permission in writing from the publisher.

12–78. Pegs A and B are restricted to move in the elliptical slots due to the motion of the slotted link. If the link moves with a constant speed of 10 m/s, determine the magnitude of the velocity and acceleration of peg A when $x = 1$ m.

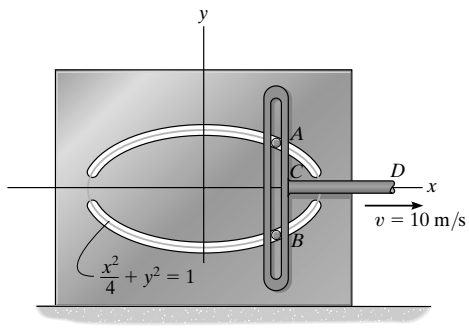

Velocity: The x and y components of the peg's velocity can be related by taking the first time derivative of the path's equation.

$$\frac{x^2}{4} + y^2 = 1$$

$$\frac{1}{4}(2x\dot{x}) + 2y\dot{y} = 0$$

$$\frac{1}{2}x\dot{x} + 2y\dot{y} = 0$$

or

$$\frac{1}{2}xv_x + 2yv_y = 0 \qquad \textbf{(1)}$$

At $x = 1$ m,

$$\frac{(1)^2}{4} + y^2 = 1 \qquad y = \frac{\sqrt{3}}{2}\text{ m}$$

Here, $v_x = 10$ m/s and $x = 1$. Substituting these values into Eq. (1),

$$\frac{1}{2}(1)(10) + 2\left(\frac{\sqrt{3}}{2}\right)v_y = 0 \qquad v_y = -2.887\text{ m/s} = 2.887\text{ m/s} \downarrow$$

Thus, the magnitude of the peg's velocity is

$$v = \sqrt{v_x{}^2 + v_y{}^2} = \sqrt{10^2 + 2.887^2} = 10.4\text{ m/s} \qquad \textbf{Ans.}$$

Acceleration: The x and y components of the peg's acceleration can be related by taking the second time derivative of the path's equation.

$$\frac{1}{2}(\dot{x}\dot{x} + x\bar{x}) + 2(\dot{y}\dot{y} + y\bar{y}) = 0$$

$$\frac{1}{2}\left(\dot{x}^2 + x\bar{x}\right) + 2\left(\dot{y}^2 + y\bar{y}\right) = 0$$

or

$$\frac{1}{2}\left(v_x{}^2 + xa_x\right) + 2\left(v_y{}^2 + ya_y\right) = 0 \qquad \textbf{(2)}$$

Since v_x is constant, $a_x = 0$. When $x = 1$ m, $y = \frac{\sqrt{3}}{2}$ m, $v_x = 10$ m/s, and $v_y = -2.887$ m/s. Substituting these values into Eq. (2),

$$\frac{1}{2}\left(10^2 + 0\right) + 2\left[(-2.887)^2 + \frac{\sqrt{3}}{2}a_y\right] = 0$$

$$a_y = -38.49\text{ m/s}^2 = 38.49\text{ m/s}^2 \downarrow$$

Thus, the magnitude of the peg's acceleration is

$$a = \sqrt{a_x{}^2 + a_y{}^2} = \sqrt{0^2 + (-38.49)^2} = 38.5\text{ m/s}^2 \qquad \textbf{Ans.}$$

© 2010 Pearson Education, Inc., Upper Saddle River, NJ. All rights reserved. This material is protected under all copyright laws as they currently exist. No portion of this material may be reproduced, in any form or by any means, without permission in writing from the publisher.

12–79. A particle travels along the path $y^2 = 4x$ with a constant speed of $v = 4$ m/s. Determine the x and y components of the particle's velocity and acceleration when the particle is at $x = 4$ m.

Velocity: The x and y components of the particle's velocity can be related by taking the first time derivative of the path's equation using the chain rule.

$$2y\dot{y} = 4\dot{x}$$

$$\dot{y} = \frac{2}{y}\dot{x}$$

or

$$v_y = \frac{2}{y}v_x \qquad \textbf{(1)}$$

At $x = 4$ m, $y = \sqrt{4(4)} = 4$ m. Thus Eq. (1) becomes

$$v_y = \frac{1}{2}v_x \qquad \textbf{(2)}$$

The magnitude of the particle's velocity is

$$v = \sqrt{{v_x}^2 + {v_y}^2} \qquad \textbf{(3)}$$

Substituting $v = 4$ m/s and Eq. (2) into Eq. (3),

$$4 = \sqrt{{v_x}^2 + \left(\frac{1}{2}v_x\right)^2}$$

$$v_x = 3.578 \text{ m/s} = 3.58 \text{ m/s} \qquad \textbf{Ans.}$$

Substituting the result of v_x into Eq. (2), we obtain

$$v_y = 1.789 \text{ m/s} = 1.79 \text{ m/s} \qquad \textbf{Ans.}$$

Acceleration: The x and y components of the particle's acceleration can be related by taking the second time derivative of the path's equation using the chain rule.

$$2(\dot{y}\dot{y} + y\bar{y}) = 4\bar{x}$$

$$\dot{y}^2 + y\bar{y} = 2\bar{x}$$

or

$${v_y}^2 + ya_y = 2a_x \qquad \textbf{(4)}$$

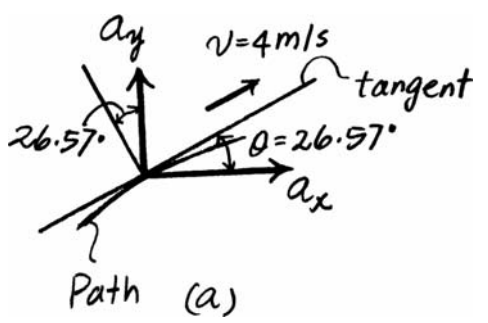

When $x = 4$ m, $y = 4$ m, and $v_y = 1.789$ m/s. Thus Eq. (4) becomes

$$1.789^2 + 4a_y = 2a_x$$

$$a_y = 0.5a_x - 0.8 \qquad \textbf{(5)}$$

Since the particle travels with a constant speed along the path, its acceleration along the tangent of the path is equal to zero. Here, the angle that the tangent makes with the horizontal at $x = 4$ m is $\theta = \tan^{-1}\left(\frac{dy}{dx}\right)\Big|_{x=4\text{ m}} = \tan^{-1}\left(\frac{1}{x^{1/2}}\right)\Big|_{x=4\text{ m}} = \tan^{-1}(0.5) = 26.57°$.

Thus, from the diagram shown in Fig. a,

$$a_x \cos 26.57° + a_y \sin 26.57° = 0 \qquad \textbf{(6)}$$

Solving Eqs. (5) and (6) yields

$$a_x = 0.32 \text{ m/s}^2 \qquad a_y = -0.64 \text{ m/s}^2 = 0.64 \text{ m/s}^2 \downarrow \qquad \textbf{Ans.}$$

© 2010 Pearson Education, Inc., Upper Saddle River, NJ. All rights reserved. This material is protected under all copyright laws as they currently exist. No portion of this material may be reproduced, in any form or by any means, without permission in writing from the publisher.

***12–80.** The van travels over the hill described by $y = (-1.5(10^{-3})\,x^2 + 15)$ ft. If it has a constant speed of 75 ft/s, determine the x and y components of the van's velocity and acceleration when $x = 50$ ft.

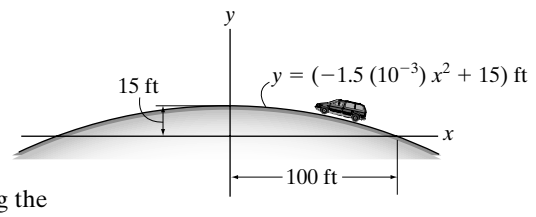

Velocity: The x and y components of the van's velocity can be related by taking the first time derivative of the path's equation using the chain rule.

$$y = -1.5\left(10^{-3}\right)x^2 + 15$$

$$\dot{y} = -3\left(10^{-3}\right)x\dot{x}$$

or

$$v_y = -3\left(10^{-3}\right)xv_x$$

When $x = 50$ ft,

$$v_y = -3\left(10^{-3}\right)(50)v_x = -0.15v_x \qquad \textbf{(1)}$$

The magnitude of the van's velocity is

$$v = \sqrt{{v_x}^2 + {v_y}^2} \qquad \textbf{(2)}$$

Substituting $v = 75$ ft/s and Eq. (1) into Eq. (2),

$$75 = \sqrt{{v_x}^2 + (-0.15v_x)^2}$$

$$v_x = 74.2 \text{ ft/s} \leftarrow \qquad \textbf{Ans.}$$

Substituting the result of v_x into Eq. (1), we obtain

$$v_y = -0.15(-74.17) = 11.12 \text{ ft/s} = 11.1 \text{ ft/s} \uparrow \qquad \textbf{Ans.}$$

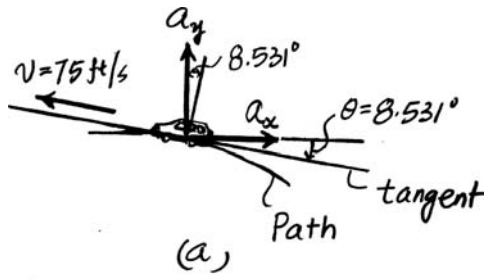

Acceleration: The x and y components of the van's acceleration can be related by taking the second time derivative of the path's equation using the chain rule.

$$\ddot{y} = -3\left(10^{-3}\right)(\dot{x}\dot{x} + x\ddot{x})$$

or

$$a_y = -3\left(10^{-3}\right)\left({v_x}^2 + xa_x\right)$$

When $x = 50$ ft, $v_x = -74.17$ ft/s. Thus,

$$a_y = -3\left(10^{-3}\right)\left[(-74.17)^2 + 50a_x\right]$$

$$a_y = -(16.504 + 0.15a_x) \qquad \textbf{(3)}$$

Since the van travels with a constant speed along the path, its acceleration along the tangent of the path is equal to zero. Here, the angle that the tangent makes with the horizontal at $x = 50$ ft is $\theta = \tan^{-1}\left(\dfrac{dy}{dx}\right)\Bigg|_{x=50\text{ ft}} = \tan^{-1}\left[-3\left(10^{-3}\right)x\right]\Bigg|_{x=50\text{ ft}} = \tan^{-1}(-0.15) = -8.531°$.
Thus, from the diagram shown in Fig. a,

$$a_x \cos 8.531° - a_y \sin 8.531° = 0 \qquad \textbf{(4)}$$

Solving Eqs. (3) and (4) yields

$$a_x = -2.42 \text{ ft/s} = 2.42 \text{ ft/s}^2 \leftarrow \qquad \textbf{Ans.}$$

$$a_y = -16.1 \text{ ft/s} = 16.1 \text{ ft/s}^2 \downarrow \qquad \textbf{Ans.}$$

© 2010 Pearson Education, Inc., Upper Saddle River, NJ. All rights reserved. This material is protected under all copyright laws as they currently exist. No portion of this material may be reproduced, in any form or by any means, without permission in writing from the publisher.

•12–81. A particle travels along the circular path from A to B in 1 s. If it takes 3 s for it to go from A to C, determine its *average velocity* when it goes from B to C.

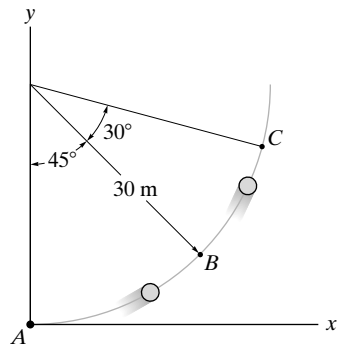

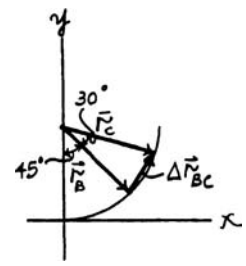

Position: The coordinates for points B and C are [30 sin 45°, 30 − 30 cos 45°] and [30 sin 75°, 30 − 30 cos 75°]. Thus,

$$\mathbf{r}_B = (30 \sin 45° - 0)\mathbf{i} + [(30 - 30 \cos 45°) - 30]\mathbf{j}$$

$$= \{21.21\mathbf{i} - 21.21\mathbf{j}\} \text{ m}$$

$$\mathbf{r}_C = (30 \sin 75° - 0)\mathbf{i} + [(30 - 30 \cos 75°) - 30]\mathbf{j}$$

$$= \{28.98\mathbf{i} - 7.765\mathbf{j}\} \text{ m}$$

Average Velocity: The displacement from point B to C is $\Delta\mathbf{r}_{BC} = \mathbf{r}_C - \mathbf{r}_B = (28.98\mathbf{i} - 7.765\mathbf{j}) - (21.21\mathbf{i} - 21.21\mathbf{j}) = \{7.765\mathbf{i} + 13.45\mathbf{j}\}$ m.

$$(\mathbf{v}_{BC})_{\text{avg}} = \frac{\Delta\mathbf{r}_{BC}}{\Delta t} = \frac{7.765\mathbf{i} + 13.45\mathbf{j}}{3 - 1} = \{3.88\mathbf{i} + 6.72\mathbf{j}\} \text{ m/s} \qquad \textbf{Ans.}$$

12–82. A car travels east 2 km for 5 minutes, then north 3 km for 8 minutes, and then west 4 km for 10 minutes. Determine the total distance traveled and the magnitude of displacement of the car. Also, what is the magnitude of the average velocity and the average speed?

Total Distance Traveled and Displacement: The total distance traveled is

$$s = 2 + 3 + 4 = 9 \text{ km} \qquad \textbf{Ans.}$$

and the magnitude of the displacement is

$$\Delta r = \sqrt{(2 + 4)^2 + 3^2} = 6.708 \text{ km} = 6.71 \text{ km} \qquad \textbf{Ans.}$$

Average Velocity and Speed: The total time is $\Delta t = 5 + 8 + 10 = 23 \text{ min} = 1380$ s. The magnitude of average velocity is

$$v_{\text{avg}} = \frac{\Delta r}{\Delta t} = \frac{6.708(10^3)}{1380} = 4.86 \text{ m/s} \qquad \textbf{Ans.}$$

and the average speed is

$$(v_{sp})_{\text{avg}} = \frac{s}{\Delta t} = \frac{9(10^3)}{1380} = 6.52 \text{ m/s} \qquad \textbf{Ans.}$$

© 2010 Pearson Education, Inc., Upper Saddle River, NJ. All rights reserved. This material is protected under all copyright laws as they currently exist. No portion of this material may be reproduced, in any form or by any means, without permission in writing from the publisher.

12–83. The roller coaster car travels down the helical path at constant speed such that the parametric equations that define its position are $x = c \sin kt$, $y = c \cos kt$, $z = h - bt$, where c, h, and b are constants. Determine the magnitudes of its velocity and acceleration.

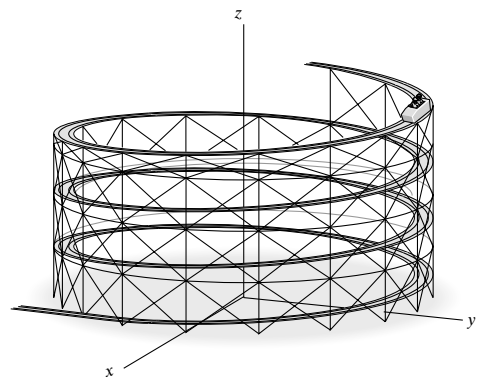

$x = c \sin kt \qquad \dot{x} = ck \cos kt \qquad \ddot{x} = -ck^2 \sin kt$

$y = c \cos kt \qquad \dot{y} = -ck \sin kt \qquad \ddot{y} = -ck^2 \cos kt$

$z = h - bt \qquad \dot{z} = -b \qquad \ddot{z} = 0$

$$v = \sqrt{(ck \cos kt)^2 + (-ck \sin kt)^2 + (-b)^2} = \sqrt{c^2k^2 + b^2}$$ **Ans.**

$$a = \sqrt{(-ck^2 \sin kt)^2 + (-ck^2 \cos kt)^2 + 0} = ck^2$$ **Ans.**

***12–84.** The path of a particle is defined by $y^2 = 4kx$, and the component of velocity along the y axis is $v_y = ct$, where both k and c are constants. Determine the x and y components of acceleration when $y = y_0$.

$$y^2 = 4kx$$

$$2yv_y = 4kv_x$$

$$2v_y^2 + 2ya_y = 4ka_x$$

$$v_y = ct$$

$$a_y = c$$ **Ans.**

$$2(ct)^2 + 2yc = 4ka_x$$

$$a_x = \frac{c}{2k}\left(y + ct^2\right)$$ **Ans.**

© 2010 Pearson Education, Inc., Upper Saddle River, NJ. All rights reserved. This material is protected under all copyright laws as they currently exist. No portion of this material may be reproduced, in any form or by any means, without permission in writing from the publisher.

•12–85. A particle moves along the curve $y = x - (x^2/400)$, where x and y are in ft. If the velocity component in the x direction is $v_x = 2$ ft/s and remains *constant*, determine the magnitudes of the velocity and acceleration when $x = 20$ ft.

Velocity: Taking the first derivative of the path $y = x - \frac{x^2}{400}$, we have

$$\dot{y} = \dot{x} - \frac{1}{400}(2x\dot{x})$$

$$\dot{y} = \dot{x} - \frac{x}{200}\dot{x} \qquad \textbf{[1]}$$

However, $\dot{x} = v_x$ and $\dot{y} = v_y$. Thus, Eq. [1] becomes

$$v_y = v_x - \frac{x}{200}v_x \qquad \textbf{[2]}$$

Here, $v_x = 2$ ft/s at $x = 20$ ft. Then, From Eq. [2]

$$v_y = 2 - \frac{20}{200}(2) = 1.80 \text{ ft/s}$$

Also,

$$v = \sqrt{v_x^2 + v_y^2} = \sqrt{2^2 + 1.80^2} = 2.69 \text{ ft/s} \qquad \textbf{Ans.}$$

Acceleration: Taking the second derivative of the path $y = x - \frac{x^2}{400}$, we have

$$\ddot{y} = \ddot{x} - \frac{1}{200}\left(\dot{x}^2 + x\ddot{x}\right) \qquad \textbf{[3]}$$

However, $\ddot{x} = a_x$ and $\ddot{y} = a_y$. Thus, Eq. [3] becomes

$$a_y = a_x - \frac{1}{200}\left(v_x^2 + xa_x\right) \qquad \textbf{[4]}$$

Since $v_x = 2$ ft/s is constant, hence $a_x = 0$ at $x = 20$ ft. Then, From Eq. [4]

$$a_y = 0 - \frac{1}{200}\left[2^2 + 20(0)\right] = -0.020 \text{ ft/s}^2$$

Also,

$$a = \sqrt{a_x^2 + a_y^2} = \sqrt{0^2 + (-0.020)^2} = 0.0200 \text{ ft/s}^2 \qquad \textbf{Ans.}$$

© 2010 Pearson Education, Inc., Upper Saddle River, NJ. All rights reserved. This material is protected under all copyright laws as they currently exist. No portion of this material may be reproduced, in any form or by any means, without permission in writing from the publisher.

12–86. The motorcycle travels with constant speed v_0 along the path that, for a short distance, takes the form of a sine curve. Determine the x and y components of its velocity at any instant on the curve.

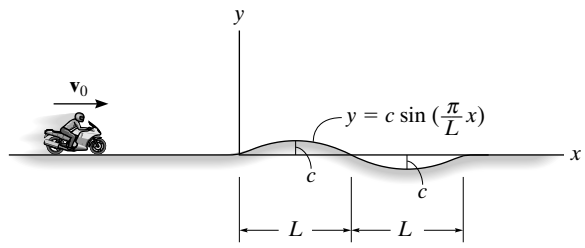

$$y = c \sin\left(\frac{\pi}{L}x\right)$$

$$y = \frac{\pi}{L}c\left(\cos\frac{\pi}{L}x\right)\dot{x}$$

$$v_y = \frac{\pi}{L}c\,v_x\left(\cos\frac{\pi}{L}x\right)$$

$$v_0^2 = v_y^2 + v_x^2$$

$$v_0^2 = v_x^2\left[1 + \left(\frac{\pi}{L}c\right)^2\cos^2\left(\frac{\pi}{L}x\right)\right]$$

$$v_x = v_0\left[1 + \left(\frac{\pi}{L}c\right)^2\cos^2\left(\frac{\pi}{L}x\right)\right]^{-\frac{1}{2}} \qquad \textbf{Ans.}$$

$$v_y = \frac{v_0\,\pi c}{L}\left(\cos\frac{\pi}{L}x\right)\left[1 + \left(\frac{\pi}{L}c\right)^2\cos^2\left(\frac{\pi}{L}x\right)\right]^{-\frac{1}{2}} \qquad \textbf{Ans.}$$

12–87. The skateboard rider leaves the ramp at A with an initial velocity v_A at a 30° angle. If he strikes the ground at B, determine v_A and the time of flight.

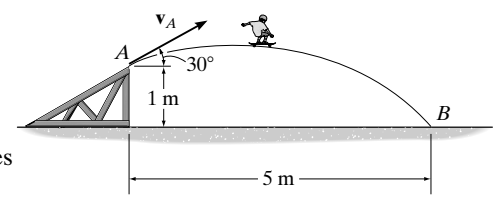

Coordinate System: The x–y coordinate system will be set so that its origin coincides with point A.

***x*-Motion:** Here, $(v_A)_x = v_A \cos 30°$, $x_A = 0$ and $x_B = 5$ m. Thus,

$$(\overset{+}{\rightarrow}) \qquad x_B = x_A + (v_A)_x t$$

$$5 = 0 + v_A \cos 30°\, t$$

$$t = \frac{5}{v_A \cos 30°} \qquad \textbf{(1)}$$

***y*-Motion:** Here, $(v_A)_y = v_A \sin 30°$, $a_y = -g = -9.81\ \text{m/s}^2$, and $y_B = -1$ m. Thus,

$$(+\uparrow) \qquad y_B = y_A + (v_A)_y t + \frac{1}{2}a_y t^2$$

$$-1 = 0 + v_A \sin 30°\, t + \frac{1}{2}(-9.81)t^2$$

$$4.905t^2 - v_A \sin 30°\, t - 1 = 0 \qquad \textbf{(2)}$$

Solving Eqs. (1) and (2) yields

$$v_A = 6.49\ \text{m/s} \qquad t = 0.890\ \text{s} \qquad \textbf{Ans.}$$

© 2010 Pearson Education, Inc., Upper Saddle River, NJ. All rights reserved. This material is protected under all copyright laws as they currently exist. No portion of this material may be reproduced, in any form or by any means, without permission in writing from the publisher.

***12–88.** The pitcher throws the baseball horizontally with a speed of 140 ft/s from a height of 5 ft. If the batter is 60 ft away, determine the time for the ball to arrive at the batter and the height h at which it passes the batter.

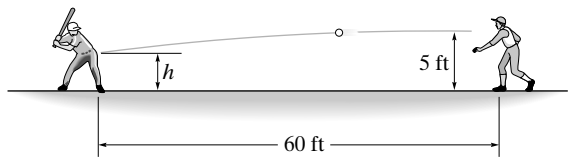

$(\overset{+}{\leftarrow})$ $\quad s = vt; \qquad 60 = 140t$

$$t = 0.4286 = 0.429 \text{ s} \qquad \textbf{Ans.}$$

$(+\uparrow)$ $\quad s = s_0 + v_0 t + \frac{1}{2} a_c t^2$

$$h = 5 + 0 + \frac{1}{2}(-32.2)(0.4286)^2 = 2.04 \text{ ft} \qquad \textbf{Ans.}$$

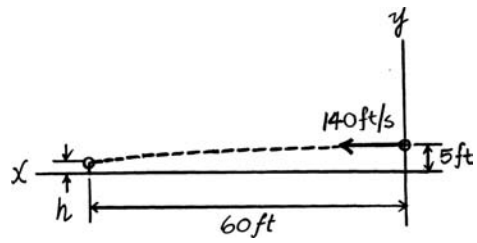

•12–89. The ball is thrown off the top of the building. If it strikes the ground at B in 3 s, determine the initial velocity v_A and the inclination angle θ_A at which it was thrown. Also, find the magnitude of the ball's velocity when it strikes the ground.

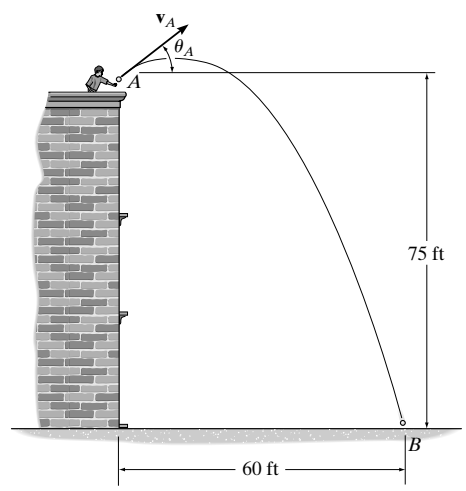

Coordinate System: The x–y coordinate system will be set so that its origin coincides with point A.

***x*-Motion:** Here, $(v_A)_x = v_A \cos\theta$, $x_A = 0$, and $x_B = 60$ ft, and $t = 3$ s. Thus,

$(\overset{+}{\rightarrow})$ $\quad x_B = x_A + (v_A)_x t$

$$60 = 0 + v_A \cos\theta(3)$$

$$v_A \cos\theta = 20 \qquad \textbf{(1)}$$

***y*-Motion:** Here, $(v_A)_y = v_A \sin\theta$, $a_y = -g = -32.2$ ft/s^2, $y_A = 0$, and $y_B = -75$ ft, and $t = 3$ s. Thus,

$(+\uparrow)$ $\quad y_B = y_A + (v_A)_y t + \frac{1}{2} a_y t^2$

$$-75 = 0 + v_A \sin\theta(3) + \frac{1}{2}(-32.2)(3^2)$$

$$v_A \sin\theta = 23.3 \qquad \textbf{(2)}$$

Solving Eqs. (1) and (2) yields

$$\theta = 49.36° = 49.4° \qquad v_A = 30.71 \text{ ft/s} = 30.7 \text{ ft/s} \qquad \textbf{Ans.}$$

Using the result of θ and v_A, we obtain

$$(v_A)_x = 30.71 \cos 49.36° = 20 \text{ ft/s} \qquad (v_A)_y = 30.71 \sin 49.36° = 23.3 \text{ ft/s}$$

Thus,

$(+\uparrow)$ $\quad (v_B)_y = (v_A)_y + a_y t$

$$(v_B)_y = 23.3 + (-32.2)(3) = -73.3 \text{ ft/s} = 73.3 \text{ ft/s} \downarrow$$

Thus, the magnitude of the ball's velocity when it strikes the ground is

$$v_B = \sqrt{20^2 + 73.3^2} = 76.0 \text{ ft/s} \qquad \textbf{Ans.}$$

© 2010 Pearson Education, Inc., Upper Saddle River, NJ. All rights reserved. This material is protected under all copyright laws as they currently exist. No portion of this material may be reproduced, in any form or by any means, without permission in writing from the publisher.

12–90. A projectile is fired with a speed of $v = 60$ m/s at an angle of 60°. A second projectile is then fired with the same speed 0.5 s later. Determine the angle θ of the second projectile so that the two projectiles collide. At what position (x, y) will this happen?

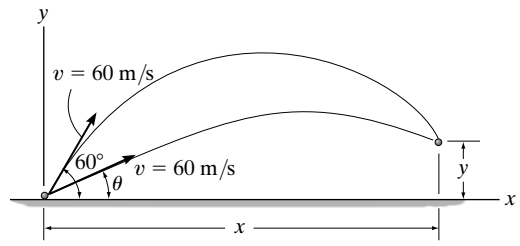

***x*-Motion:** For the motion of the first projectile, $v_x = 60 \cos 60° = 30$ m/s, $x_0 = 0$, and $t = t_1$. Thus,

$$(\overset{+}{\rightarrow}) \qquad x = x_0 + v_x t$$

$$x = 0 + 30t_1 \qquad \textbf{(1)}$$

For the motion of the second projectile, $v_x = 60 \cos \theta$, $x_0 = 0$, and $t = t_1 - 0.5$. Thus,

$$(\overset{+}{\rightarrow}) \qquad x = x_0 + v_x t$$

$$x = 0 + 60 \cos \theta (t_1 - 0.5) \qquad \textbf{(2)}$$

***y*-Motion:** For the motion of the first projectile, $v_y = 60 \sin 60° = 51.96$ m/s, $y_0 = 0$, and $a_y = -g = -9.81$ m/s^2. Thus,

$$(+\uparrow) \qquad y = y_0 + v_y t + \frac{1}{2} a_y t^2$$

$$y = 0 + 51.96t_1 + \frac{1}{2}(-9.81){t_1}^2$$

$$y = 51.96t_1 - 4.905{t_1}^2 \qquad \textbf{(3)}$$

For the motion of the second projectile, $v_y = 60 \sin \theta$, $y_0 = 0$, and $a_y = -g = -9.81$ m/s^2. Thus,

$$(+\uparrow) \qquad y = y_0 + v_y t + \frac{1}{2} a_y t^2$$

$$y = 0 + 60 \sin \theta (t_1 - 0.5) + \frac{1}{2}(-9.81)(t_1 - 0.5)^2$$

$$y = (60 \sin \theta)t_1 - 30 \sin \theta - 4.905\, {t_1}^2 + 4.905t_1 - 1.22625 \qquad \textbf{(4)}$$

Equating Eqs. (1) and (2),

$$30t_1 = 60 \cos \theta (t_1 - 0.5)$$

$$t_1 = \frac{\cos \theta}{2 \cos \theta - 1} \qquad \textbf{(5)}$$

Equating Eqs. (3) and (4),

$$51.96t_1 - 4.905{t_1}^2 = (60 \sin \theta)t_1 - 30 \sin \theta - 4.905{t_1}^2 + 4.905t_1 - 1.22625$$

$$(60 \sin \theta - 47.06)t_1 = 30 \sin \theta + 1.22625$$

$$t_1 = \frac{30 \sin \theta + 1.22625}{60 \sin \theta - 47.06} \qquad \textbf{(6)}$$

© 2010 Pearson Education, Inc., Upper Saddle River, NJ. All rights reserved. This material is protected under all copyright laws as they currently exist. No portion of this material may be reproduced, in any form or by any means, without permission in writing from the publisher.

Equating Eqs. (5) and (6) yields

$$\frac{\cos\theta}{2\cos\theta - 1} = \frac{30\sin\theta + 1.22625}{60\sin\theta - 47.06}$$

$$49.51\cos\theta - 30\sin\theta = 1.22625$$

Solving by trial and error,

$$\theta = 57.57^\circ = 57.6^\circ \qquad \textbf{Ans.}$$

Substituting this result into Eq. (5) $\left(\text{or Eq. (6)}\right)$,

$$t_1 = \frac{\cos 57.57^\circ}{2\cos 57.57^\circ - 1} = 7.3998 \text{ s}$$

Substituting this result into Eqs. (1) and (3),

$$x = 30(7.3998) = 222 \text{ m} \qquad \textbf{Ans.}$$

$$y = 51.96(7.3998) - 4.905\left(7.3998^2\right) = 116 \text{ m} \qquad \textbf{Ans.}$$

© 2010 Pearson Education, Inc., Upper Saddle River, NJ. All rights reserved. This material is protected under all copyright laws as they currently exist. No portion of this material may be reproduced, in any form or by any means, without permission in writing from the publisher.

12–91. The fireman holds the hose at an angle $\theta = 30°$ with horizontal, and the water is discharged from the hose at A with a speed of $v_A = 40\,\text{ft/s}$. If the water stream strikes the building at B, determine his two possible distances s from the building.

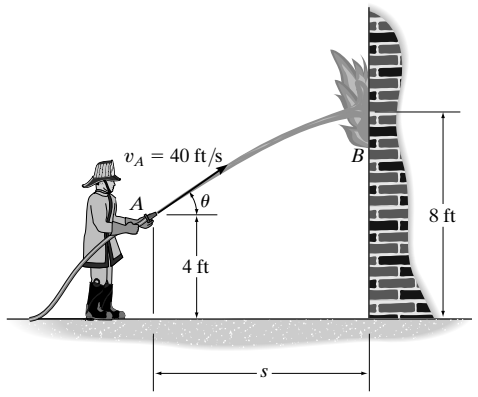

Coordinate System: The x–y coordinate system will be set so that its origin coincides with point A.

***x*-Motion:** Here, $(v_A)_x = 40 \cos 30°\ \text{ft/s} = 34.64\ \text{ft/s}$, $x_A = 0$, and $x_B = s$. Thus,

$$(\overset{+}{\rightarrow}) \qquad x_B = x_A + (v_A)_x t$$

$$s = 0 + 34.64t$$

$$s = 34.64t \qquad \textbf{(1)}$$

***y*-Motion:** Here, $(v_A)_y = 40 \sin 30°\ \text{ft/s} = 20\ \text{ft/s}$, $a_y = -g = -32.2\ \text{ft/s}^2$, $y_A = 0$, and $y_B = 8 - 4 = 4$ ft. Thus,

$$(+\uparrow) \qquad y_B = y_A + (v_A)_y t + \frac{1}{2}a_y t^2$$

$$4 = 0 + 20t + \frac{1}{2}(-32.2)t^2$$

$$16.1t^2 - 20t + 4 = 0$$

$$t = 0.2505\ \text{s and } 0.9917\ \text{s}$$

Substituting these results into Eq. (1), the two possible distances are

$$s = 34.64(0.2505) = 8.68\ \text{ft} \qquad \textbf{Ans.}$$

$$s = 34.64(0.9917) = 34.4\ \text{ft} \qquad \textbf{Ans.}$$

© 2010 Pearson Education, Inc., Upper Saddle River, NJ. All rights reserved. This material is protected under all copyright laws as they currently exist. No portion of this material may be reproduced, in any form or by any means, without permission in writing from the publisher.

***12–92.** Water is discharged from the hose with a speed of 40 ft/s. Determine the two possible angles θ the fireman can hold the hose so that the water strikes the building at B. Take $s = 20$ ft.

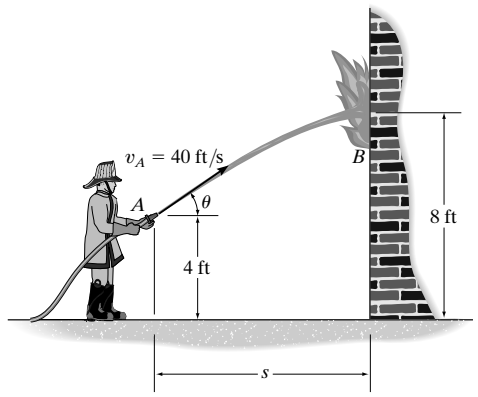

Coordinate System: The x–y coordinate system will be set so that its origin coincides with point A.

***x*-Motion:** Here, $(v_A)_x = 40 \cos\theta$, $x_A = 0$, and $x_B = 20$ ft/s. Thus,

$$(\overset{+}{\rightarrow}) \qquad x_B = x_A + (v_A)_x t$$

$$20 = 0 + 40 \cos\theta t$$

$$t = \frac{1}{2\cos\theta} \qquad \textbf{(1)}$$

***y*-Motion:** Here, $(v_A)_y = 40 \sin\theta$, $a_y = -g = -32.2$ ft/s^2, $y_A = 0$, and $y_B = 8 - 4 = 4$ ft. Thus,

$$(+\uparrow) \qquad y_B = y_A + (v_A)_y t + \frac{1}{2} a_y t^2$$

$$4 = 0 + 40 \sin\theta t + \frac{1}{2}(-32.2)t^2$$

$$16.1t^2 - 40 \sin\theta t + 4 = 0 \qquad \textbf{(2)}$$

Substituting Eq. (1) into Eq. (2) yields

$$16.1\left(\frac{1}{2\cos\theta}\right)^2 - 40 \sin\theta\left(\frac{1}{2\cos\theta}\right) + 4 = 0$$

$$20 \sin\theta \cos\theta - 4 \cos^2\theta = 4.025$$

$$10 \sin\theta \cos\theta - 2 \cos^2\theta = 2.0125$$

$$5 \sin 2\theta - \left(2\cos^2\theta - 1\right) - 1 = 2.0125$$

$$5 \sin 2\theta - \cos 2\theta = 3.0125$$

Solving by trial and error,

$$\theta = 23.8° \text{ and } 77.5° \qquad \textbf{Ans.}$$

© 2010 Pearson Education, Inc., Upper Saddle River, NJ. All rights reserved. This material is protected under all copyright laws as they currently exist. No portion of this material may be reproduced, in any form or by any means, without permission in writing from the publisher.

•12–93. The pitching machine is adjusted so that the baseball is launched with a speed of $v_A = 30\,\text{m/s}$. If the ball strikes the ground at B, determine the two possible angles θ_A at which it was launched.

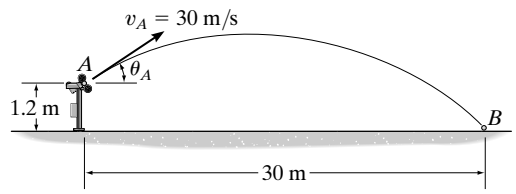

Coordinate System: The x–y coordinate system will be set so that its origin coincides with point A.

***x*-Motion:** Here, $(v_A)_x = 30\cos\theta_A$, $x_A = 0$ and $x_B = 30$ m. Thus,

$$(\overset{+}{\rightarrow}) \qquad x_B = x_A + (v_A)_x t$$

$$30 = 0 + 30\cos\theta_A t$$

$$t = \frac{1}{\cos\theta_A} \qquad \textbf{(1)}$$

***y*-Motion:** Here, $(v_A)_y = 30\sin\theta_A$, $a_y = -g = -9.81\ \text{m/s}^2$, and $y_B = -1.2$ m. Thus,

$$(+\uparrow) \qquad y_B = y_A + (v_A)_y t + \frac{1}{2}a_y t^2$$

$$-1.2 = 0 + 30\sin\theta_A t + \frac{1}{2}(-9.81)t^2$$

$$4.905t^2 - 30\sin\theta_A\, t - 1.2 = 0 \qquad \textbf{(2)}$$

Substituting Eq. (1) into Eq. (2) yields

$$4.905\left(\frac{1}{\cos\theta_A}\right)^2 - 30\sin\theta_A\left(\frac{1}{\cos\theta_A}\right) - 1.2 = 0$$

$$1.2\cos^2\theta_A + 30\sin\theta_A\cos\theta_A - 4.905 = 0$$

Solving by trial and error,

$$\theta_A = 7.19^\circ \text{ and } 80.5^\circ \qquad \textbf{Ans.}$$

© 2010 Pearson Education, Inc., Upper Saddle River, NJ. All rights reserved. This material is protected under all copyright laws as they currently exist. No portion of this material may be reproduced, in any form or by any means, without permission in writing from the publisher.

12–94. It is observed that the time for the ball to strike the ground at B is 2.5 s. Determine the speed v_A and angle θ_A at which the ball was thrown.

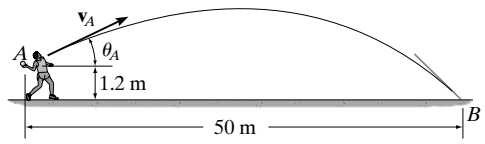

Coordinate System: The x–y coordinate system will be set so that its origin coincides with point A.

***x*-Motion:** Here, $(v_A)_x = v_A \cos\theta_A$, $x_A = 0$, $x_B = 50$ m, and $t = 2.5$ s. Thus,

$$(\overset{+}{\rightarrow}) \qquad x_B = x_A + (v_A)_x t$$

$$50 = 0 + v_A \cos\theta_A (2.5)$$

$$v_A \cos\theta_A = 20 \qquad \textbf{(1)}$$

***y*-Motion:** Here, $(v_A)_y = v_A \sin\theta_A$, $y_A = 0$, $y_B = -1.2$ m, and $a_y = -g = -9.81$ m/s^2. Thus,

$$(+\uparrow) \qquad y_B = y_A + (v_A)_y t + \frac{1}{2} a_y t^2$$

$$-1.2 = 0 + v_A \sin\theta_A (2.5) + \frac{1}{2}(-9.81)\left(2.5^2\right)$$

$$v_A \sin\theta_A = 11.7825 \qquad \textbf{(2)}$$

Solving Eqs. (1) and (2) yields

$$\theta_A = 30.5^\circ \qquad v_A = 23.2 \text{ m/s} \qquad \textbf{Ans.}$$

12–95. If the motorcycle leaves the ramp traveling at 110 ft/s, determine the height h ramp B must have so that the motorcycle lands safely.

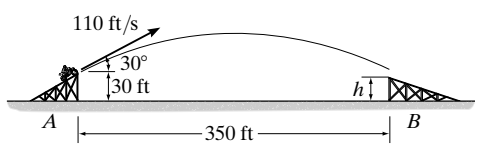

Coordinate System: The x–y coordinate system will be set so that its origin coincides with the take off point of the motorcycle at ramp A.

***x*-Motion:** Here, $x_A = 0$, $x_B = 350$ ft, and $(v_A)_x = 110 \cos 30^\circ = 95.26$ ft/s. Thus,

$$(\overset{+}{\rightarrow}) \qquad x_B = x_A + (v_A)_x t$$

$$350 = 0 + 95.26t$$

$$t = 3.674 \text{ s}$$

***y*-Motion:** Here, $y_A = 0$, $y_B = h - 30$, $(v_A)_y = 110 \sin 30^\circ = 55$ ft/s, and $a_y = -g = -32.2$ ft/s^2. Thus, using the result of t, we have

$$(+\uparrow) \qquad y_B = y_A + (v_A)_y t + \frac{1}{2} a_y t^2$$

$$h - 30 = 0 + 55(3.674) + \frac{1}{2}(-32.2)\left(3.674^2\right)$$

$$h = 14.7 \text{ ft} \qquad \textbf{Ans.}$$

© 2010 Pearson Education, Inc., Upper Saddle River, NJ. All rights reserved. This material is protected under all copyright laws as they currently exist. No portion of this material may be reproduced, in any form or by any means, without permission in writing from the publisher.

***12–96.** The baseball player A hits the baseball with $v_A = 40$ ft/s and $\theta_A = 60°$. When the ball is directly above of player B he begins to run under it. Determine the constant speed v_B and the distance d at which B must run in order to make the catch at the same elevation at which the ball was hit.

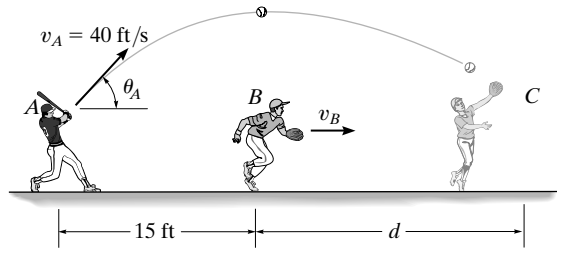

Vertical Motion: The vertical component of initial velocity for the football is $(v_0)_y = 40 \sin 60° = 34.64$ ft/s. The initial and final vertical positions are $(s_0)_y = 0$ and $s_y = 0$, respectively.

$$(+\uparrow) \qquad s_y = (s_0)_y + (v_0)_y t + \frac{1}{2}(a_c)_y t^2$$

$$0 = 0 + 34.64t + \frac{1}{2}(-32.2)t^2$$

$$t = 2.152 \text{ s}$$

Horizontal Motion: The horizontal component of velocity for the baseball is $(v_0)_x = 40 \cos 60° = 20.0$ ft/s. The initial and final horizontal positions are $(s_0)_x = 0$ and $s_x = R$, respectively.

$$(\overset{+}{\rightarrow}) \qquad s_x = (s_0)_x + (v_0)_x t$$

$$R = 0 + 20.0(2.152) = 43.03 \text{ ft}$$

The distance for which player B must travel in order to catch the baseball is

$$d = R - 15 = 43.03 - 15 = 28.0 \text{ ft} \qquad \textbf{Ans.}$$

Player B is required to run at a same speed as the horizontal component of velocity of the baseball in order to catch it.

$$v_B = 40 \cos 60° = 20.0 \text{ ft/s} \qquad \textbf{Ans.}$$

© 2010 Pearson Education, Inc., Upper Saddle River, NJ. All rights reserved. This material is protected under all copyright laws as they currently exist. No portion of this material may be reproduced, in any form or by any means, without permission in writing from the publisher.

•12–97. A boy throws a ball at O in the air with a speed v_0 at an angle θ_1. If he then throws another ball with the same speed v_0 at an angle $\theta_2 < \theta_1$, determine the time between the throws so that the balls collide in mid air at B.

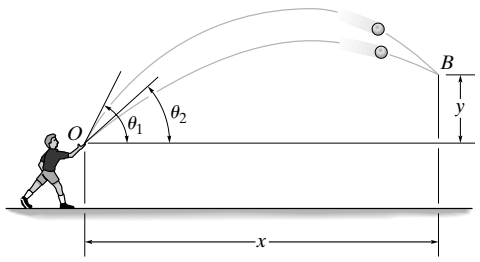

Vertical Motion: For the first ball, the vertical component of initial velocity is $(v_0)_y = v_0 \sin\theta_1$ and the initial and final vertical positions are $(s_0)_y = 0$ and $s_y = y$, respectively.

$$(+\uparrow) \qquad s_y = (s_0)_y + (v_0)_y t + \frac{1}{2}(a_c)_y t^2$$

$$y = 0 + v_0 \sin\theta_1 t_1 + \frac{1}{2}(-g)t_1^2 \qquad \textbf{[1]}$$

For the second ball, the vertical component of initial velocity is $(v_0)_y = v_0 \sin\theta_2$ and the initial and final vertical positions are $(s_0)_y = 0$ and $s_y = y$, respectively.

$$(+\uparrow) \qquad s_y = (s_0)_y + (v_0)_y t + \frac{1}{2}(a_c)_y t^2$$

$$y = 0 + v_0 \sin\theta_2 t_2 + \frac{1}{2}(-g)t_2^2 \qquad \textbf{[2]}$$

Horizontal Motion: For the first ball, the horizontal component of initial velocity is $(v_0)_x = v_0 \cos\theta_1$ and the initial and final horizontal positions are $(s_0)_x = 0$ and $s_x = x$, respectively.

$$(\overset{+}{\rightarrow}) \qquad s_x = (s_0)_x + (v_0)_x t$$

$$x = 0 + v_0 \cos\theta_1 t_1 \qquad \textbf{[3]}$$

For the second ball, the horizontal component of initial velocity is $(v_0)_x = v_0 \cos\theta_2$ and the initial and final horizontal positions are $(s_0)_x = 0$ and $s_x = x$, respectively.

$$(\overset{+}{\rightarrow}) \qquad s_x = (s_0)_x + (v_0)_x t$$

$$x = 0 + v_0 \cos\theta_2 t_2 \qquad \textbf{[4]}$$

Equating Eqs. [3] and [4], we have

$$t_2 = \frac{\cos\theta_1}{\cos\theta_2} t_1 \qquad \textbf{[5]}$$

Equating Eqs. [1] and [2], we have

$$v_0 t_1 \sin\theta_1 - v_0 t_2 \sin\theta_2 = \frac{1}{2} g\left(t_1^2 - t_2^2\right) \qquad \textbf{[6]}$$

Solving Eq. [5] into [6] yields

$$t_1 = \frac{2v_0 \cos\theta_2 \sin(\theta_1 - \theta_2)}{g(\cos^2\theta_2 - \cos^2\theta_1)}$$

$$t_2 = \frac{2v_0 \cos\theta_1 \sin(\theta_1 - \theta_2)}{g(\cos^2\theta_2 - \cos^2\theta_1)}$$

Thus, the time between the throws is

$$\Delta t = t_1 - t_2 = \frac{2v_0 \sin(\theta_1 - \theta_2)(\cos\theta_2 - \cos\theta_1)}{g(\cos^2\theta_2 - \cos^2\theta_1)}$$

$$= \frac{2v_0 \sin(\theta_1 - \theta_2)}{g(\cos\theta_2 + \cos\theta_1)} \qquad \textbf{Ans.}$$

© 2010 Pearson Education, Inc., Upper Saddle River, NJ. All rights reserved. This material is protected under all copyright laws as they currently exist. No portion of this material may be reproduced, in any form or by any means, without permission in writing from the publisher.

12–98. The golf ball is hit at A with a speed of $v_A = 40\,\text{m/s}$ and directed at an angle of 30° with the horizontal as shown. Determine the distance d where the ball strikes the slope at B.

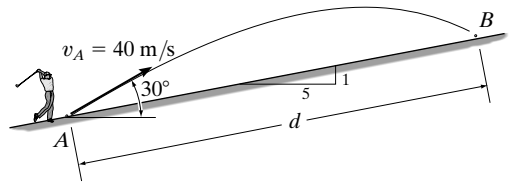

Coordinate System: The x–y coordinate system will be set so that its origin coincides with point A.

***x*-Motion:** Here, $(v_A)_x = 40\cos 30° = 34.64$ m/s, $x_A = 0$, and $x_B = d\left(\frac{5}{\sqrt{5^2+1}}\right) = 0.9806d$. Thus,

$$(\overset{+}{\rightarrow}) \qquad x_B = x_A + (v_A)_x t$$

$$0.9806d = 0 + 34.64t$$

$$t = 0.02831d \qquad \textbf{(1)}$$

***y*-Motion:** Here, $(v_A)_y = 40\sin 30° = 20$ m/s, $y_A = 0$, $y_B = d\left(\sqrt{\frac{1}{\sqrt{5^2+1}}}\right) = 0.1961d$, and $a_y = -g = -9.81\ \text{m/s}^2$.

Thus,

$$(+\uparrow) \qquad y_B = y_A + (v_A)_y t + \frac{1}{2}a_y t^2$$

$$0.1961d = 0 + 20t + \frac{1}{2}(-9.81)t^2$$

$$4.905t^2 - 20t + 0.1961d = 0 \qquad \textbf{(2)}$$

Substituting Eq. (1) into Eq. (2) yields

$$4.905(0.02831d)^2 - 20(0.02831d) + 0.1961d = 0$$

$$3.9303\left(10^{-3}\right)d^2 - 0.37002d = 0$$

$$d\left[3.9303\left(10^{-3}\right)d - 0.37002\right] = 0$$

Since $d \neq 0$, then

$$3.9303\left(10^{-3}\right)d = 0.37002 = 0$$

$$d = 94.1\ \text{m} \qquad \textbf{Ans.}$$

© 2010 Pearson Education, Inc., Upper Saddle River, NJ. All rights reserved. This material is protected under all copyright laws as they currently exist. No portion of this material may be reproduced, in any form or by any means, without permission in writing from the publisher.

12–99. If the football is kicked at the 45° angle, determine its minimum initial speed v_A so that it passes over the goal post at C. At what distance s from the goal post will the football strike the ground at B?

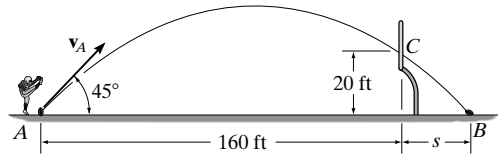

Coordinate System: The x–y coordinate system will be set so that its origin coincides with point A.

***x*-Motion:** For the motion from A to C, $x_A = 0$, and $x_C = 160$ ft, $(v_A)_x = v_A \cos 45°$, and $t = t_{AC}$. Thus,

$$(\overset{+}{\rightarrow}) \qquad x_C = x_A + (v_A)_x t$$

$$160 = 0 + v_A \cos 45°\, t_{AC}$$

$$t_{AC} = \frac{160}{v_A \cos 45°} \qquad \textbf{(1)}$$

For the motion from A to B, $x_A = 0$, and $x_B = 160 + s$, $(v_A)_x = v_A \cos 45°$, and $t = t_{AB}$. Thus,

$$(\overset{+}{\rightarrow}) \qquad x_B = x_A + (v_A)_x t$$

$$160 + s = 0 + v_A \cos 45°\, t_{AB}$$

$$s = v_A \cos 45°(t_{AB}) - 160 \qquad \textbf{(2)}$$

***y*-Motion:** For the motion from A to C, $y_A = 0$, and $y_C = 20$ ft, $(v_A)_y = v_A \sin 45°$, and $a_y = -g = -32.2$ ft/s^2. Thus,

$$(+\uparrow) \qquad y_C = y_A + (v_A)_y t + \frac{1}{2} a_y t^2$$

$$20 = 0 + v_A \sin 45°\, t_{AC} + \frac{1}{2}(-32.2) t_{AC}{}^2$$

$$16.1 t_{AC}{}^2 - v_A \sin 45°\, t_{AC} + 20 = 0 \qquad \textbf{(3)}$$

For the motion from A to B, $y_A = y_B = 0$. Thus,

$$(+\uparrow) \qquad y_B = y_A + (v_A)_y t + \frac{1}{2} a_y t^2$$

$$0 = 0 + v_A \sin 45°(t_{AB}) + \frac{1}{2}(-32.2) t_{AB}{}^2$$

$$t_{AB}(16.1 t_{AB} - v_A \sin 45°) = 0$$

Since $t_{AB} \neq 0$, then

$$16.1 t_{AB} - v_A \sin 45° = 0 \qquad \textbf{(4)}$$

Substituting Eq. (1) into Eq. (3) yields

$$16.1\left(\frac{160}{v_A \cos 45°}\right)^2 - v_A \sin 45°\left(\frac{160}{v_A \cos 45°}\right) + 20 = 0$$

$$v_A = 76.73 \text{ ft/s} = 76.7 \text{ ft/s} \qquad \textbf{Ans.}$$

Substituting this result into Eq. (4),

$$16.1 t_{AB} - 76.73 \sin 45° = 0$$

$$t_{AB} = 3.370 \text{ s}$$

Substituting the result of t_{AB} and v_A into Eq. (2),

$$s = 76.73 \cos 45°(3.370) - 160$$

$$= 22.9 \text{ ft} \qquad \textbf{Ans.}$$

© 2010 Pearson Education, Inc., Upper Saddle River, NJ. All rights reserved. This material is protected under all copyright laws as they currently exist. No portion of this material may be reproduced, in any form or by any means, without permission in writing from the publisher.

***12–100.** The velocity of the water jet discharging from the orifice can be obtained from $v = \sqrt{2gh}$, where $h = 2\,\text{m}$ is the depth of the orifice from the free water surface. Determine the time for a particle of water leaving the orifice to reach point B and the horizontal distance x where it hits the surface.

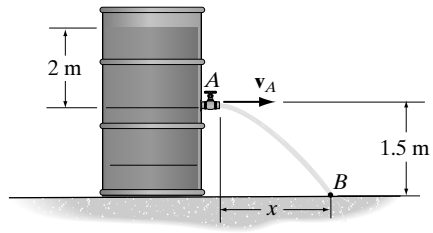

Coordinate System: The x–y coordinate system will be set so that its origin coincides with point A. The speed of the water that the jet discharges from A is

$$v_A = \sqrt{2(9.81)(2)} = 6.264\ \text{m/s}$$

***x*-Motion:** Here, $(v_A)_x = v_A = 6.264\ \text{m/s}$, $x_A = 0$, $x_B = x$, and $t = t_A$. Thus,

$$(\overset{+}{\rightarrow}) \qquad x_B = x_A + (v_A)_x t$$

$$x = 0 + 6.264 t_A \qquad \textbf{(1)}$$

***y*-Motion:** Here, $(v_A)_y = 0$, $a_y = -g = -9.81\ \text{m/s}^2$, $y_A = 0\ \text{m}$, $y_B = -1.5\ \text{m}$, and $t = t_A$. Thus,

$$(+\uparrow) \qquad y_B = y_A + (v_A)_y t + \frac{1}{2} a_y t^2$$

$$-1.5 = 0 + 0 + \frac{1}{2}(-9.81) t_A{}^2$$

$$t_A = 0.553\ \text{s}$$

Thus,

$$x = 0 + 6.264(0.553) = 3.46\ \text{m} \qquad \textbf{Ans.}$$

•12–101. A projectile is fired from the platform at B. The shooter fires his gun from point A at an angle of 30°. Determine the muzzle speed of the bullet if it hits the projectile at C.

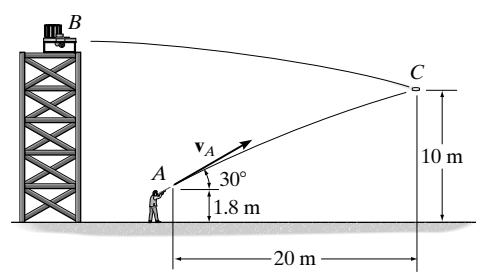

Coordinate System: The x–y coordinate system will be set so that its origin coincides with point A.

***x*-Motion:** Here, $x_A = 0$ and $x_C = 20\ \text{m}$. Thus,

$$(\overset{+}{\rightarrow}) \qquad x_C = x_A + (v_A)_x t$$

$$20 = 0 + v_A \cos 30°\, t \qquad \textbf{(1)}$$

***y*-Motion:** Here, $y_A = 1.8$, $(v_A)_y = v_A \sin 30°$, and $a_y = -g = -9.81\ \text{m/s}^2$. Thus,

$$(+\uparrow) \qquad y_C = y_A + (v_A)_y t + \frac{1}{2} a_y t^2$$

$$10 = 1.8 + v_A \sin 30°(t) + \frac{1}{2}(-9.81)(t)^2$$

Thus,

$$10 - 1.8 = \left(\frac{20 \sin 30°}{\cos 30°(t)}\right)(t) - 4.905(t)^2$$

$$t = 0.8261\ \text{s}$$

So that

$$v_A = \frac{20}{\cos 30°(0.8261)} = 28.0\ \text{m/s} \qquad \textbf{Ans.}$$

© 2010 Pearson Education, Inc., Upper Saddle River, NJ. All rights reserved. This material is protected under all copyright laws as they currently exist. No portion of this material may be reproduced, in any form or by any means, without permission in writing from the publisher.

12–102. A golf ball is struck with a velocity of 80 ft/s as shown. Determine the distance d to where it will land.

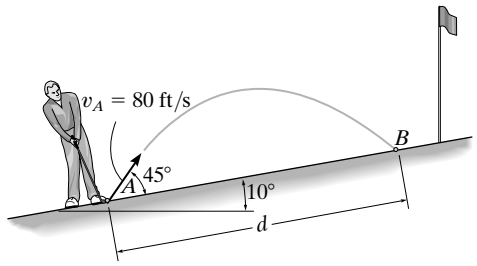

Horizontal Motion: The horizontal component of velocity is $(v_0)_x = 80 \cos 55° = 45.89$ ft/s. The initial and final horizontal positions are $(s_0)_x = 0$ and $s_x = d \cos 10°$, respectively.

$$(\overset{+}{\rightarrow}) \qquad s_x = (s_0)_x + (v_0)_x t$$

$$d \cos 10° = 0 + 45.89t \qquad \textbf{[1]}$$

Vertical Motion: The vertical component of initial velocity is $(v_0)_y = 80 \sin 55° = 65.53$ ft/s. The initial and final vertical positions are $(s_0)_y = 0$ and $s_y = d \sin 10°$, respectively.

$$(+\uparrow) \qquad s_y = (s_0)_y + (v_0)_y t + \frac{1}{2}(a_c)_y t^2$$

$$d \sin 10° = 0 + 65.53t + \frac{1}{2}(-32.2)t^2 \qquad \textbf{[2]}$$

Solving Eqs. [1] and [2] yields

$$d = 166 \text{ ft} \qquad \textbf{Ans.}$$

$$t = 3.568 \text{ s}$$

12–103. The football is to be kicked over the goalpost, which is 15 ft high. If its initial speed is $v_A = 80$ ft/s, determine if it makes it over the goalpost, and if so, by how much, h.

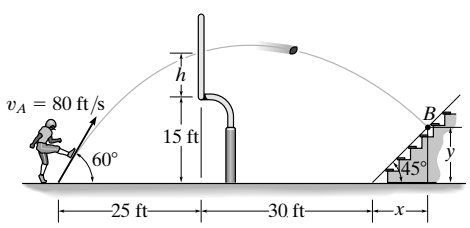

Horizontal Motion: The horizontal component of velocity is $(v_0)_x = 80 \cos 60° = 40.0$ ft/s. The initial and final horizontal positions are $(s_0)_x = 0$ and $s_x = 25$ ft, respectively.

$$(\overset{+}{\rightarrow}) \qquad s_x = (s_0)_x + (v_0)_x t$$

$$25 = 0 + 40.0t$$

$$t = 0.625 \text{ s}$$

Vertical Motion: The vertical component of initial velocity is $(v_0)_y = 80 \sin 60° = 69.28$ ft/s. The initial and final vertical positions are $(s_0)_y = 0$ and $s_y = H$, respectively.

$$(+\uparrow) \qquad s_y = (s_0)_y + (v_0)_y t + \frac{1}{2}(a_c)_y t^2$$

$$H = 0 + 69.28(0.625) + \frac{1}{2}(-32.2)\left(0.625^2\right)$$

$$H = 37.01 \text{ ft}$$

Since $H > 15$ ft, the football is kicked over the goalpost. **Ans.**

$$h = H - 15 = 37.01 - 15 = 22.0 \text{ ft} \qquad \textbf{Ans.}$$

© 2010 Pearson Education, Inc., Upper Saddle River, NJ. All rights reserved. This material is protected under all copyright laws as they currently exist. No portion of this material may be reproduced, in any form or by any means, without permission in writing from the publisher.

***12–104.** The football is kicked over the goalpost with an initial velocity of $v_A = 80$ ft/s as shown. Determine the point B (x, y) where it strikes the bleachers.

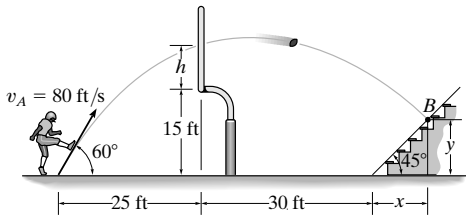

Horizontal Motion: The horizontal component of velocity is $(v_0)_x = 80 \cos 60° = 40.0$ ft/s. The initial and final horzontal positions are $(s_0)_x = 0$ and $s_x = (55 + x)$, respectively.

$(\overset{+}{\rightarrow})$ $$s_x = (s_0)_x + (v_0)_x t$$

$$55 + x = 0 + 40.0t \qquad \textbf{[1]}$$

Vertical Motion: The vertical component of initial velocity is $(v_0)_y = 80 \sin 60° = 69.28$ ft/s. The initial and final vertical positions are $(s_0)_y = 0$ and $s_y = y = x \tan 45° = x$, respectively.

$(+\uparrow)$ $$s_y = (s_0)_y + (v_0)_y t + \frac{1}{2}(a_c)_y t^2$$

$$x = 0 + 69.28t + \frac{1}{2}(-32.2)t^2 \qquad \textbf{[2]}$$

Solving Eqs. [1] and [2] yields

$$t = 2.969 \text{ s}$$

$$y = x = 63.8 \text{ ft} \qquad \textbf{Ans.}$$

•12–105. The boy at A attempts to throw a ball over the roof of a barn with an initial speed of $v_A = 15$ m/s. Determine the angle θ_A at which the ball must be thrown so that it reaches its maximum height at C. Also, find the distance d where the boy should stand to make the throw.

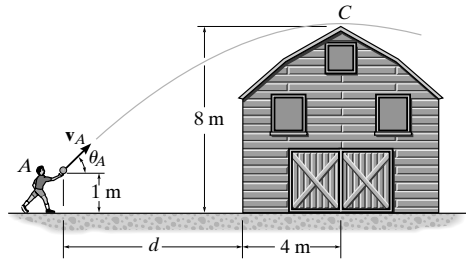

Vertical Motion: The vertical component, of initial and final velocity are $(v_0)_y = (15 \sin \theta_A)$ m/s and $v_y = 0$, respectively. The initial vertical position is $(s_0)_y = 1$ m.

$(+\uparrow)$ $$v_y = (v_0) + a_c t$$

$$0 = 15 \sin \theta_A + (-9.81)t \qquad \textbf{[1]}$$

$(+\uparrow)$ $$s_y = (s_0)_y + (v_0)_y t + \frac{1}{2}(a_c)_y t^2$$

$$8 = 1 + 15 \sin \theta_A t + \frac{1}{2}(-9.81)t^2 \qquad \textbf{[2]}$$

Solving Eqs. [1] and [2] yields

$$\theta_A = 51.38° = 51.4° \qquad \textbf{Ans.}$$

$$t = 1.195 \text{ s}$$

Horizontal Motion: The horizontal component of velocity is $(v_0)_x = v_A \cos \theta_A = 15 \cos 51.38° = 9.363$ m/s. The initial and final horizontal positions are $(s_0)_x = 0$ and $s_x = (d + 4)$ m, respectively.

$(\overset{+}{\rightarrow})$ $$s_x = (s_0)_x + (v_0)_x t$$

$$d + 4 = 0 + 9.363(1.195)$$

$$d = 7.18 \text{ m} \qquad \textbf{Ans.}$$

© 2010 Pearson Education, Inc., Upper Saddle River, NJ. All rights reserved. This material is protected under all copyright laws as they currently exist. No portion of this material may be reproduced, in any form or by any means, without permission in writing from the publisher.

12–106. The boy at A attempts to throw a ball over the roof of a barn such that it is launched at an angle $\theta_A = 40°$. Determine the minimum speed v_A at which he must throw the ball so that it reaches its maximum height at C. Also, find the distance d where the boy must stand so that he can make the throw.

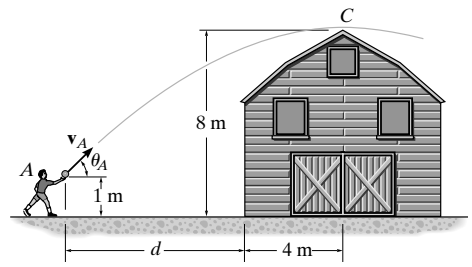

Vertical Motion: The vertical components of initial and final velocity are $(v_0)_y = (v_A \sin 40°)$ m/s and $v_y = 0$, respectively. The initial vertical position is $(s_0)_y = 1$ m.

$(+\uparrow)$ $$v_y = (v_0) + a_c t$$

$$0 = v_A \sin 40° + (-9.81)\, t \qquad \textbf{[1]}$$

$(+\uparrow)$ $$s_y = (s_0)_y + (v_0)_y t + \frac{1}{2}(a_c)_y t^2$$

$$8 = 1 + v_A \sin 40° t + \frac{1}{2}(-9.81)\, t^2 \qquad \textbf{[2]}$$

Solving Eqs. [1] and [2] yields

$$v_A = 18.23 \text{ m/s} = 18.2 \text{ m/s} \qquad \textbf{Ans.}$$

$$t = 1.195 \text{ s}$$

Horizontal Motion: The horizontal component of velocity is $(v_0)_x = v_A \cos \theta_A = 18.23 \cos 40° = 13.97$ m/s. The initial and final horizontal positions are $(s_0)_x = 0$ and $s_x = (d + 4)$ m, respectively.

$(\overset{+}{\rightarrow})$ $$s_x = (s_0)_x + (v_0)_x t$$

$$d + 4 = 0 + 13.97(1.195)$$

$$d = 12.7 \text{ m} \qquad \textbf{Ans.}$$

12–107. The fireman wishes to direct the flow of water from his hose to the fire at B. Determine two possible angles θ_1 and θ_2 at which this can be done. Water flows from the hose at $v_A = 80$ ft/s.

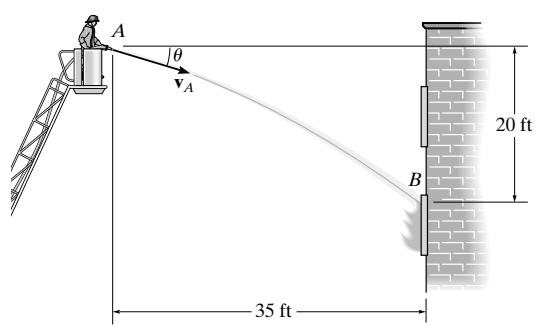

$(\overset{+}{\rightarrow})$ $$s = s_0 + v_0 t$$

$$35 = 0 + (80) \cos \theta$$

$(+\uparrow)$ $$s = s_0 + v_0 t + \frac{1}{2} a_c t^2$$

$$-20 = 0 - 80 \sin \theta\, t + \frac{1}{2}(-32.2) t^2$$

Thus,

$$20 = 80 \sin \theta \frac{0.4375}{\cos \theta} t + 16.1\left(\frac{0.1914}{\cos^2 \theta}\right)$$

$$20 \cos^2 \theta = 17.5 \sin 2\theta + 3.0816$$

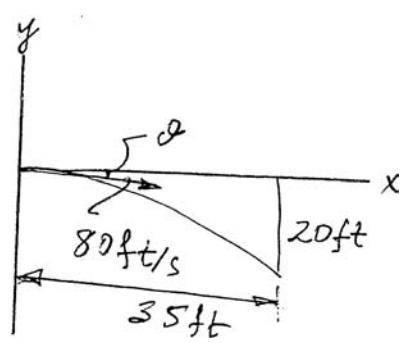

Solving,

$$\theta_1 = 25.0° \quad \text{(below the horizontal)} \qquad \textbf{Ans.}$$

$$\theta_2 = 85.2° \quad \text{(above the horizontal)} \qquad \textbf{Ans.}$$

© 2010 Pearson Education, Inc., Upper Saddle River, NJ. All rights reserved. This material is protected under all copyright laws as they currently exist. No portion of this material may be reproduced, in any form or by any means, without permission in writing from the publisher.

***12–108.** Small packages traveling on the conveyor belt fall off into a l-m-long loading car. If the conveyor is running at a constant speed of $v_C = 2$ m/s, determine the smallest and largest distance R at which the end A of the car may be placed from the conveyor so that the packages enter the car.

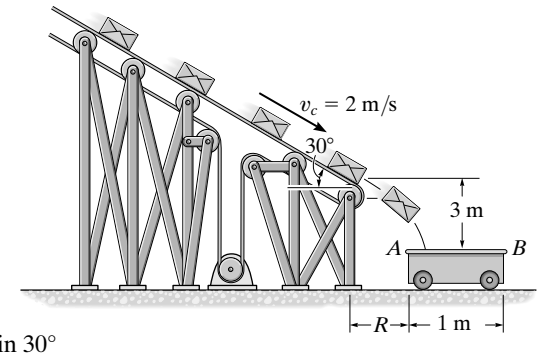

Vertical Motion: The vertical component of initial velocity is $(v_0)_y = 2 \sin 30° = 1.00$ m/s. The initial and final vertical positions are $(s_0)_y = 0$ and $s_y = 3$ m, respectively.

$$(+\downarrow) \qquad s_y = (s_0)_y + (v_0)_y t + \frac{1}{2}(a_c)_y t^2$$

$$3 = 0 + 1.00(t) + \frac{1}{2}(9.81)\left(t^2\right)$$

Choose the positive root $t = 0.6867$ s

Horizontal Motion: The horizontal component of velocity is $(v_0)_x = 2 \cos 30° = 1.732$ m/s and the initial horizontal position is $(s_0)_x = 0$. If $s_x = R$, then

$$(\overset{+}{\rightarrow}) \qquad s_x = (s_0)_x + (v_0)_x t$$

$$R = 0 + 1.732(0.6867) = 1.19 \text{ m} \qquad \textbf{Ans.}$$

If $s_x = R + 1$, then

$$(\overset{+}{\rightarrow}) \qquad s_x = (s_0)_x + (v_0)_x t$$

$$R + 1 = 0 + 1.732(0.6867)$$

$$R = 0.189 \text{ m} \qquad \textbf{Ans.}$$

© 2010 Pearson Education, Inc., Upper Saddle River, NJ. All rights reserved. This material is protected under all copyright laws as they currently exist. No portion of this material may be reproduced, in any form or by any means, without permission in writing from the publisher.

•12–109. Determine the horizontal velocity v_A of a tennis ball at A so that it just clears the net at B. Also, find the distance s where the ball strikes the ground.

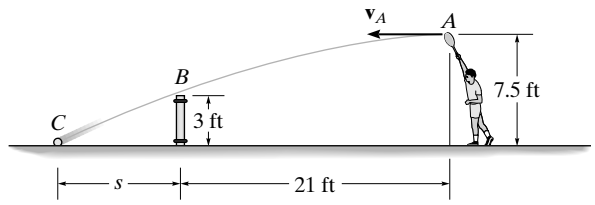

Vertical Motion: The vertical component of initial velocity is $(v_0)_y = 0$. For the ball to travel from A to B, the initial and final vertical positions are $(s_0)_y = 7.5$ ft and $s_y = 3$ ft, respectively.

$$(+\uparrow) \qquad s_y = (s_0)_y + (v_0)_y t + \frac{1}{2}(a_c)_y t^2$$

$$3 = 7.5 + 0 + \frac{1}{2}(-32.2)t_1^2$$

$$t_1 = 0.5287 \text{ s}$$

For the ball to travel from A to C, the initial and final vertical positions are $(s_0)_y = 7.5$ ft and $s_y = 0$, respectively.

$$(+\uparrow) \qquad s_y = (s_0)_y + (v_0)_y t + \frac{1}{2}(a_c)_y t^2$$

$$0 = 7.5 + 0 + \frac{1}{2}(-32.2)t_2^2$$

$$t_2 = 0.6825 \text{ s}$$

Horizontal Motion: The horizontal component of velocity is $(v_0)_x = v_A$. For the ball to travel from A to B, the initial and final horizontal positions are $(s_0)_x = 0$ and $s_x = 21$ ft, respectively. The time is $t = t_1 = 0.5287$ s.

$$(\overset{+}{\leftarrow}) \qquad s_x = (s_0)_x + (v_0)_x t$$

$$21 = 0 + v_A(0.5287)$$

$$v_A = 39.72 \text{ ft/s} = 39.7 \text{ ft/s} \qquad \textbf{Ans.}$$

For the ball to travel from A to C, the initial and final horizontal positions are $(s_0)_x = 0$ and $s_x = (21 + s)$ ft, respectively. The time is $t = t_2 = 0.6825$ s.

$$(\overset{+}{\leftarrow}) \qquad s_x = (s_0)_x + (v_0)_x t$$

$$21 + s = 0 + 39.72(0.6825)$$

$$s = 6.11 \text{ ft} \qquad \textbf{Ans.}$$

© 2010 Pearson Education, Inc., Upper Saddle River, NJ. All rights reserved. This material is protected under all copyright laws as they currently exist. No portion of this material may be reproduced, in any form or by any means, without permission in writing from the publisher.

12–110. It is observed that the skier leaves the ramp A at an angle $\theta_A = 25°$ with the horizontal. If he strikes the ground at B, determine his initial speed v_A and the time of flight t_{AB}.

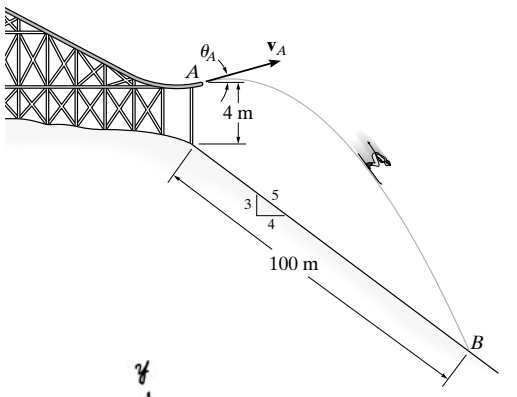

$(\overset{+}{\rightarrow})$ $\quad s = v_0 t$

$$100\left(\frac{4}{5}\right) = v_A \cos 25° t_{AB}$$

$(+\uparrow)$ $\quad s = s_0 + v_0 t + \frac{1}{2} a_c t^2$

$$-4 - 100\left(\frac{3}{5}\right) = 0 + v_A \sin 25° t_{AB} + \frac{1}{2}(-9.81)t_{AB}^2$$

Solving,

$v_A = 19.4$ m/s **Ans.**

$t_{AB} = 4.54$ s **Ans.**

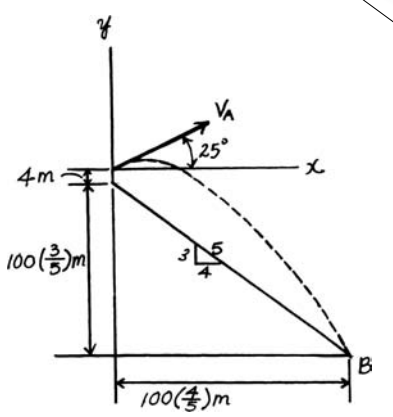

12–111. When designing a highway curve it is required that cars traveling at a constant speed of 25 m/s must not have an acceleration that exceeds 3 m/s^2. Determine the minimum radius of curvature of the curve.

Acceleration: Since the car is traveling with a constant speed, its tangential component of acceleration is zero, i.e., $a_t = 0$. Thus,

$$a = a_n = \frac{v^2}{\rho}$$

$$3 = \frac{25^2}{\rho}$$

$\rho = 208$ m **Ans.**

***12–112.** At a given instant, a car travels along a circular curved road with a speed of 20 m/s while decreasing its speed at the rate of 3 m/s^2. If the magnitude of the car's acceleration is 5 m/s^2, determine the radius of curvature of the road.

Acceleration: Here, the car's tangential component of acceleration of $a_t = -3$ m/s^2. Thus,

$$a = \sqrt{a_t{}^2 + a_n{}^2}$$

$$5 = \sqrt{(-3)^2 + a_n{}^2}$$

$$a_n = 4 \text{ m/s}^2$$

$$a_n = \frac{v^2}{\rho}$$

$$4 = \frac{20^2}{\rho}$$

$\rho = 100$ m **Ans.**

© 2010 Pearson Education, Inc., Upper Saddle River, NJ. All rights reserved. This material is protected under all copyright laws as they currently exist. No portion of this material may be reproduced, in any form or by any means, without permission in writing from the publisher.

•12–113. Determine the maximum constant speed a race car can have if the acceleration of the car cannot exceed 7.5 m/s^2 while rounding a track having a radius of curvature of 200 m.

Acceleration: Since the speed of the race car is constant, its tangential component of acceleration is zero, i.e., $a_t = 0$. Thus,

$$a = a_n = \frac{v^2}{\rho}$$

$$7.5 = \frac{v^2}{200}$$

$$v = 38.7 \text{ m/s} \qquad \textbf{Ans.}$$

12–114. An automobile is traveling on a horizontal circular curve having a radius of 800 ft. If the acceleration of the automobile is 5 ft/s^2, determine the constant speed at which the automobile is traveling.

Acceleration: Since the automobile is traveling at a constant speed, $a_t = 0$.

Thus, $a_n = a = 5$ ft/s^2. Applying Eq. 12–20, $a_n = \frac{v^2}{\rho}$, we have

$$v = \sqrt{\rho a_n} = \sqrt{800(5)} = 63.2 \text{ ft/s} \qquad \textbf{Ans.}$$

12–115. A car travels along a horizontal circular curved road that has a radius of 600 m. If the speed is uniformly increased at a rate of 2000 km/h^2, determine the magnitude of the acceleration at the instant the speed of the car is 60 km/h.

$$a_t = \left(\frac{2000 \text{ km}}{\text{h}^2}\right)\left(\frac{1000 \text{ m}}{1 \text{ km}}\right)\left(\frac{1\text{h}}{3600 \text{ s}}\right)^2 = 0.1543 \text{ m/s}^2$$

$$v = \left(\frac{60 \text{ km}}{\text{h}}\right)\left(\frac{1000 \text{ m}}{1 \text{ km}}\right)\left(\frac{1\text{h}}{3600 \text{ s}}\right) = 16.67 \text{ m/s}$$

$$a_n = \frac{v^2}{\rho} = \frac{16.67^2}{600} = 0.4630 \text{ m/s}^2$$

$$a = \sqrt{a_t^2 + a_n^2} = \sqrt{0.1543^2 + 0.4630^2} = 0.488 \text{ m/s}^2 \qquad \textbf{Ans.}$$

© 2010 Pearson Education, Inc., Upper Saddle River, NJ. All rights reserved. This material is protected under all copyright laws as they currently exist. No portion of this material may be reproduced, in any form or by any means, without permission in writing from the publisher.

***12–116.** The automobile has a speed of 80 ft/s at point A and an acceleration **a** having a magnitude of 10 ft/s^2, acting in the direction shown. Determine the radius of curvature of the path at point A and the tangential component of acceleration.

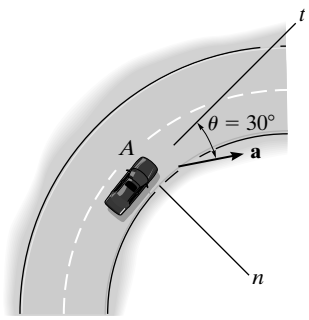

Acceleration: The tangential acceleration is

$$a_t = a\cos 30° = 10\cos 30° = 8.66 \text{ ft/s}^2 \qquad \textbf{Ans.}$$

and the normal acceleration is $a_n = a\sin 30° = 10\sin 30° = 5.00 \text{ ft/s}^2$. Applying Eq. 12–20, $a_n = \dfrac{v^2}{\rho}$, we have

$$\rho = \frac{v^2}{a_n} = \frac{80^2}{5.00} = 1280 \text{ ft} \qquad \textbf{Ans.}$$

•12–117. Starting from rest the motorboat travels around the circular path, $\rho = 50$ m, at a speed $v = (0.8t)$ m/s, where t is in seconds. Determine the magnitudes of the boat's velocity and acceleration when it has traveled 20 m.

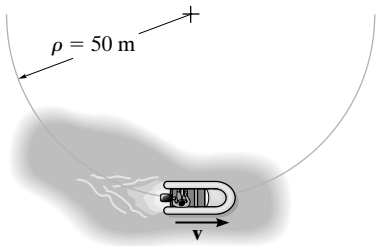

Velocity: The time for which the boat to travel 20 m must be determined first.

$$ds = v\,dt$$

$$\int_0^{20\text{ m}} ds = \int_0^t 0.8t\,dt$$

$$t = 7.071 \text{ s}$$

The magnitude of the boat's velocity is

$$v = 0.8\,(7.071) = 5.657 \text{ m/s} = 5.66 \text{ m/s} \qquad \textbf{Ans.}$$

Acceleration: The tangential accelerations is

$$a_t = \dot{v} = 0.8 \text{ m/s}^2$$

To determine the normal acceleration, apply Eq. 12–20.

$$a_n = \frac{v^2}{\rho} = \frac{5.657^2}{50} = 0.640 \text{ m/s}^2$$

Thus, the magnitude of acceleration is

$$a = \sqrt{a_t^2 + a_n^2} = \sqrt{0.8^2 + 0.640^2} = 1.02 \text{ m/s}^2 \qquad \textbf{Ans.}$$

© 2010 Pearson Education, Inc., Upper Saddle River, NJ. All rights reserved. This material is protected under all copyright laws as they currently exist. No portion of this material may be reproduced, in any form or by any means, without permission in writing from the publisher.

12–118. Starting from rest, the motorboat travels around the circular path, $\rho = 50$ m, at a speed $v = (0.2t^2)$ m/s, where t is in seconds. Determine the magnitudes of the boat's velocity and acceleration at the instant $t = 3$ s.

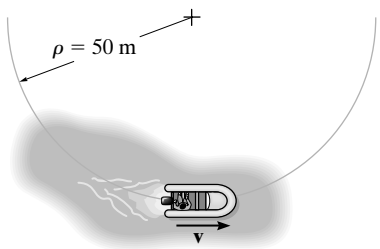

Velocity: When $t = 3$ s, the boat travels at a speed of

$$v = 0.2\left(3^2\right) = 1.80 \text{ m/s} \qquad \textbf{Ans.}$$

Acceleration: The tangential acceleration is $a_t = \dot{v} = (0.4t)$ m/s^2. When $t = 3$ s,

$$a_t = 0.4\,(3) = 1.20 \text{ m/s}^2$$

To determine the normal acceleration, apply Eq. 12–20.

$$a_n = \frac{v^2}{\rho} = \frac{1.80^2}{50} = 0.0648 \text{ m/s}^2$$

Thus, the magnitude of acceleration is

$$a = \sqrt{a_t^2 + a_n^2} = \sqrt{1.20^2 + 0.0648^2} = 1.20 \text{ m/s}^2 \qquad \textbf{Ans.}$$

12–119. A car moves along a circular track of radius 250 ft, and its speed for a short period of time $0 \le t \le 2$ s is $v = 3(t + t^2)$ ft/s, where t is in seconds. Determine the magnitude of the car's acceleration when $t = 2$ s. How far has it traveled in $t = 2$ s?

$$v = 3\left(t + t^2\right)$$

$$a_t = \frac{dv}{dt} = 3 + 6t$$

When $t = 2$ s,

$$a_t = 3 + 6(2) = 15 \text{ ft/s}^2$$

$$a_n = \frac{v^2}{\rho} = \frac{\left[3(2 + 2^2)\right]^2}{250} = 1.296 \text{ ft/s}^2$$

$$a = \sqrt{(15)^2 + (1.296)^2} = 15.1 \text{ ft/s}^2 \qquad \textbf{Ans.}$$

$$ds = v\,dt$$

$$\int ds = \int_0^2 3\left(t + t^2\right)dt$$

$$\Delta s = \frac{3}{2}t^2 + t^3\Big]_0^2$$

$$\Delta s = 14 \text{ ft} \qquad \textbf{Ans.}$$

© 2010 Pearson Education, Inc., Upper Saddle River, NJ. All rights reserved. This material is protected under all copyright laws as they currently exist. No portion of this material may be reproduced, in any form or by any means, without permission in writing from the publisher.

***12–120.** The car travels along the circular path such that its speed is increased by $a_t = (0.5e^t)\ \text{m/s}^2$, where t is in seconds. Determine the magnitudes of its velocity and acceleration after the car has traveled $s = 18$ m starting from rest. Neglect the size of the car.

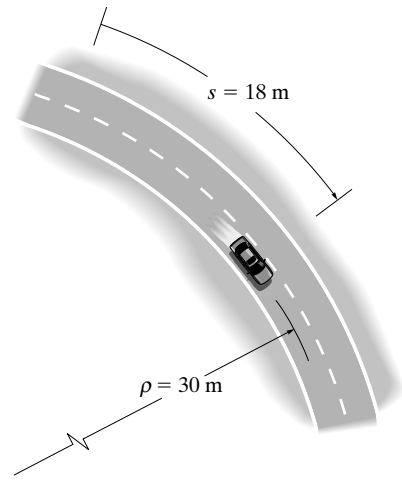

$$\int_0^v dv = \int_0^t 0.5e^t\,dt$$

$$v = 0.5(e^t - 1)$$

$$\int_0^{18} ds = 0.5\int_0^t (e^t - 1)dt$$

$$18 = 0.5(e^t - t - 1)$$

Solving,

$$t = 3.7064\ \text{s}$$

$$v = 0.5(e^{3.7064} - 1) = 19.85\ \text{m/s} = 19.9\ \text{m/s} \qquad \textbf{Ans.}$$

$$a_t = \dot{v} = 0.5e^t\big|_{t=3.7064\ \text{s}} = 20.35\ \text{m/s}^2$$

$$a_n = \frac{v^2}{\rho} = \frac{19.85^2}{30} = 13.14\ \text{m/s}^2$$

$$a = \sqrt{a_t^2 + a_n^2} = \sqrt{20.35^2 + 13.14^2} = 24.2\ \text{m/s}^2 \qquad \textbf{Ans.}$$

•12–121. The train passes point B with a speed of 20 m/s which is decreasing at $a_t = -0.5\ \text{m/s}^2$. Determine the magnitude of acceleration of the train at this point.

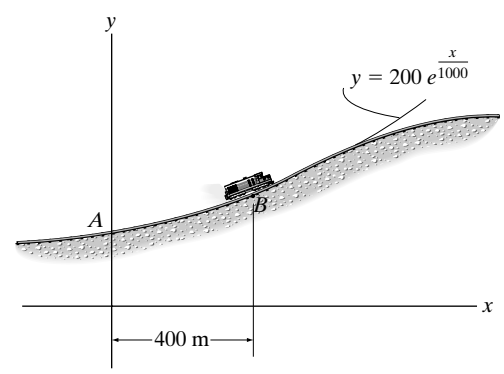

Radius of Curvature:

$$y = 200e^{\frac{x}{1000}}$$

$$\frac{dy}{dx} = 200\left(\frac{1}{1000}\right)e^{\frac{x}{1000}} = 0.2e^{\frac{x}{1000}}$$

$$\frac{d^2y}{dx^2} = 0.2\left(\frac{1}{1000}\right)e^{\frac{x}{1000}} = 0.2\left(10^{-3}\right)e^{\frac{x}{1000}}.$$

$$\rho = \frac{\left[1 + \left(\frac{dy}{dx}\right)^2\right]^{3/2}}{\left|\frac{d^2y}{dx^2}\right|} = \left.\frac{\left[1 + \left(0.2\,e^{\frac{x}{1000}}\right)^2\right]^{3/2}}{\left|0.2\left(10^{-3}\right)e^{\frac{x}{1000}}\right|}\right|_{x=400\ \text{m}} = 3808.96\ \text{m}$$

Acceleration:

$$a_t = \dot{v} = -0.5\ \text{m/s}^2$$

$$a_n = \frac{v^2}{\rho} = \frac{20^2}{3808.96} = 0.1050\ \text{m/s}^2$$

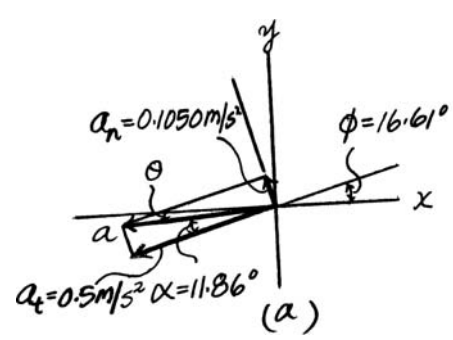

The magnitude of the train's acceleration at B is

$$a = \sqrt{a_t^2 + a_n^2} = \sqrt{(-0.5)^2 + 0.1050^2} = 0.511\ \text{m/s}^2 \qquad \textbf{Ans.}$$

© 2010 Pearson Education, Inc., Upper Saddle River, NJ. All rights reserved. This material is protected under all copyright laws as they currently exist. No portion of this material may be reproduced, in any form or by any means, without permission in writing from the publisher.

12–122. The train passes point A with a speed of 30 m/s and begins to decrease its speed at a constant rate of $a_t = -0.25\ \text{m/s}^2$. Determine the magnitude of the acceleration of the train when it reaches point B, where $s_{AB} = 412$ m.

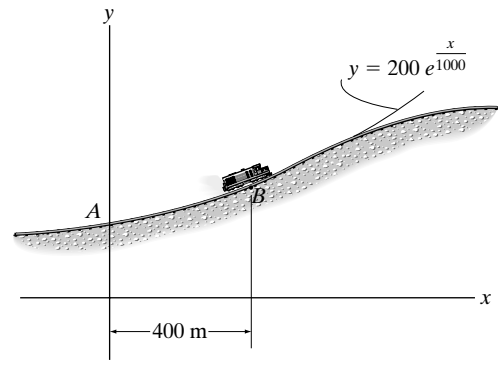

Velocity: The speed of the train at B can be determined from

$$v_B{}^2 = v_A{}^2 + 2a_t(s_B - s_A)$$

$$v_B{}^2 = 30^2 + 2(-0.25)(412 - 0)$$

$$v_B = 26.34\ \text{m/s}$$

Radius of Curvature:

$$y = 200e^{\frac{x}{1000}}$$

$$\frac{dy}{dx} = 0.2e^{\frac{x}{1000}}$$

$$\frac{d^2y}{dx^2} = 0.2\left(10^{-3}\right)e^{\frac{x}{1000}}$$

$$\rho = \frac{\left[1+\left(\frac{dy}{dx}\right)^2\right]^{3/2}}{\left|\frac{d^2y}{dx^2}\right|} = \left.\frac{\left[1+\left(0.2e^{\frac{x}{1000}}\right)^2\right]^{3/2}}{\left|0.2\left(10^{-3}\right)e^{\frac{x}{1000}}\right|}\right|_{x=400\ \text{m}} = 3808.96\ \text{m}$$

Acceleration:

$$a_t = \dot{v} = -0.25\ \text{m/s}^2$$

$$a_n = \frac{v^2}{\rho} = \frac{26.34^2}{3808.96} = 0.1822\ \text{m/s}^2$$

The magnitude of the train's acceleration at B is

$$a = \sqrt{a_t^2 + a_n^2} = \sqrt{\left(-0.5\right)^2 + 0.1822^2} = 0.309\ \text{m/s}^2 \qquad \textbf{Ans.}$$

© 2010 Pearson Education, Inc., Upper Saddle River, NJ. All rights reserved. This material is protected under all copyright laws as they currently exist. No portion of this material may be reproduced, in any form or by any means, without permission in writing from the publisher.

12–123. The car passes point A with a speed of 25 m/s after which its speed is defined by $v = (25 - 0.15s)$ m/s. Determine the magnitude of the car's acceleration when it reaches point B, where $s = 51.5$ m.

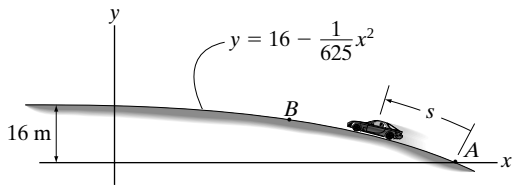

Velocity: The speed of the car at B is

$$v_B = \left[25 - 0.15(51.5)\right] = 17.28 \text{ m/s}$$

Radius of Curvature:

$$y = 16 - \frac{1}{625}x^2$$

$$\frac{dy}{dx} = -3.2\left(10^{-3}\right)x$$

$$\frac{d^2y}{dx^2} = -3.2\left(10^{-3}\right)$$

$$\rho = \frac{\left[1 + \left(\frac{dy}{dx}\right)^2\right]^{3/2}}{\left|\frac{d^2y}{dx^2}\right|} = \left.\frac{\left[1 + \left(-3.2\left(10^{-3}\right)x\right)^2\right]^{3/2}}{\left|-3.2\left(10^{-3}\right)\right|}\right|_{x=50\text{ m}} = 324.58 \text{ m}$$

Acceleration:

$$a_n = \frac{{v_B}^2}{\rho} = \frac{17.28^2}{324.58} = 0.9194 \text{ m/s}^2$$

$$a_t = v\frac{dv}{ds} = (25 - 0.15s)(-0.15) = (0.225s - 3.75) \text{ m/s}^2$$

When the car is at B $(s = 51.5 \text{ m})$

$$a_t = \left[0.225(51.5) - 3.75\right] = -2.591 \text{ m/s}^2$$

Thus, the magnitude of the car's acceleration at B is

$$a = \sqrt{a_t^2 + a_n^2} = \sqrt{(-2.591)^2 + 0.9194^2} = 2.75 \text{ m/s}^2 \qquad \textbf{Ans.}$$

© 2010 Pearson Education, Inc., Upper Saddle River, NJ. All rights reserved. This material is protected under all copyright laws as they currently exist. No portion of this material may be reproduced, in any form or by any means, without permission in writing from the publisher.

***12–124.** If the car passes point A with a speed of 20 m/s and begins to increase its speed at a constant rate of $a_t = 0.5\ \text{m/s}^2$, determine the magnitude of the car's acceleration when $s = 100$ m.

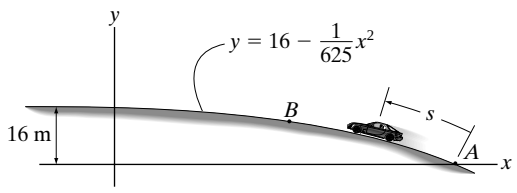

Velocity: The speed of the car at C is

$$v_C{}^2 = v_A{}^2 + 2a_t(s_C - s_A)$$

$$v_C{}^2 = 20^2 + 2(0.5)(100 - 0)$$

$$v_C = 22.361\ \text{m/s}$$

Radius of Curvature:

$$y = 16 - \frac{1}{625}x^2$$

$$\frac{dy}{dx} = -3.2\left(10^{-3}\right)x$$

$$\frac{d^2y}{dx^2} = -3.2\left(10^{-3}\right)$$

$$\rho = \frac{\left[1 + \left(\frac{dy}{dx}\right)^2\right]^{3/2}}{\left|\frac{d^2y}{dx^2}\right|} = \left.\frac{\left[1 + \left(-3.2\left(10^{-3}\right)x\right)^2\right]^{3/2}}{\left|-3.2\left(10^{-3}\right)\right|}\right|_{x=0} = 312.5\ \text{m}$$

Acceleration:

$$a_t = \dot{v} = 0.5\ \text{m/s}$$

$$a_n = \frac{v_C{}^2}{\rho} = \frac{22.361^2}{312.5} = 1.60\ \text{m/s}^2$$

The magnitude of the car's acceleration at C is

$$a = \sqrt{a_t^2 + a_n^2} = \sqrt{0.5^2 + 1.60^2} = 1.68\ \text{m/s}^2 \qquad \textbf{Ans.}$$

© 2010 Pearson Education, Inc., Upper Saddle River, NJ. All rights reserved. This material is protected under all copyright laws as they currently exist. No portion of this material may be reproduced, in any form or by any means, without permission in writing from the publisher.

•12–125. When the car reaches point A it has a speed of 25 m/s. If the brakes are applied, its speed is reduced by $a_t = (-\frac{1}{4}t^{1/2})$ m/s^2. Determine the magnitude of acceleration of the car just before it reaches point C.

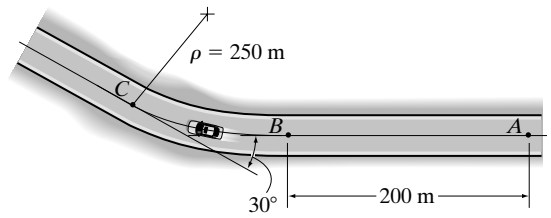

Velocity: Using the initial condition $v = 25$ m/s at $t = 0$ s,

$$dv = a_t\,dt$$

$$\int_{25\text{ m/s}}^{v} dv = \int_0^t -\frac{1}{4}t^{1/2}\,dt$$

$$v = \left(25 - \frac{1}{6}t^{3/2}\right)\text{ m/s} \qquad \textbf{(1)}$$

Position: Using the initial conditions $s = 0$ when $t = 0$ s,

$$\int ds = \int v dt$$

$$\int_0^s ds = \int_0^t \left(25 - \frac{1}{6}t^{3/2}\right)dt$$

$$s = \left(25t - \frac{1}{15}t^{5/2}\right)\text{ m}$$

Acceleration: When the car reaches C, $s_C = 200 + 250\left(\frac{\pi}{6}\right) = 330.90$ m. Thus,

$$330.90 = 25t - \frac{1}{15}t^{5/2}$$

Solving by trial and error,

$$t = 15.942\text{ s}$$

Thus, using Eq. (1).

$$v_C = 25 - \frac{1}{6}(15.942)^{3/2} = 14.391\text{ m/s}$$

$$(a_t)_C = \dot{v} = -\frac{1}{4}\left(15.942^{1/2}\right) = -0.9982\text{ m/s}^2$$

$$\left(a_n\right)_C = \frac{{v_C}^2}{\rho} = \frac{14.391^2}{250} = 0.8284\text{ m/s}^2$$

The magnitude of the car's acceleration at C is

$$a = \sqrt{\left(a_t\right)_C{}^2 + \left(a_n\right)_C{}^2} = \sqrt{(-0.9982)^2 + 0.8284^2} = 1.30\text{ m/s}^2 \qquad \textbf{Ans.}$$

© 2010 Pearson Education, Inc., Upper Saddle River, NJ. All rights reserved. This material is protected under all copyright laws as they currently exist. No portion of this material may be reproduced, in any form or by any means, without permission in writing from the publisher.

12–126. When the car reaches point A, it has a speed of 25 m/s. If the brakes are applied, its speed is reduced by $a_t = (0.001s - 1)\ \text{m/s}^2$. Determine the magnitude of acceleration of the car just before it reaches point C.

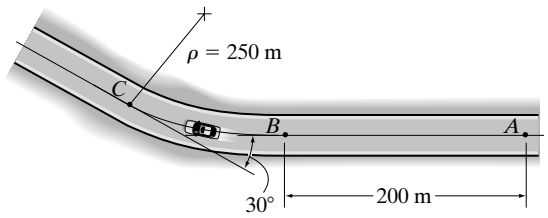

Velocity: Using the initial condition $v = 25$ m/s at $t = 0$ s,

$$dv = ads$$

$$\int_{25\ \text{m/s}}^{v} vdv = \int_0^s (0.001s - 1)ds$$

$$v = \sqrt{0.001s^2 - 2s + 625}$$

Acceleration: When the car is at point C, $s_C = 200 + 250\left(\frac{\pi}{6}\right) = 330.90$ m. Thus, the speed of the car at C is

$$v_C = \sqrt{0.001\left(330.90^2\right) - 2(330.90) + 625} = 8.526\ \text{m/s}^2$$

$$(a_t)_C = \dot{v} = [0.001(330.90) - 1] = -0.6691\ \text{m/s}^2$$

$$(a_n)_C = \frac{{v_C}^2}{\rho} = \frac{8.526^2}{250} = 0.2908\ \text{m/s}^2$$

The magnitude of the car's acceleration at C is

$$a = \sqrt{{(a_t)_C}^2 + {(a_n)_C}^2} = \sqrt{(-0.6691)^2 + 0.2908^2} = 0.730\ \text{m/s}^2 \qquad \textbf{Ans.}$$

12–127. Determine the magnitude of acceleration of the airplane during the turn. It flies along the horizontal circular path AB in 40 s, while maintaining a constant speed of 300 ft/s.

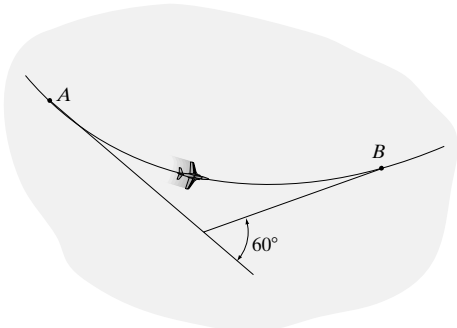

Acceleration: From the geometry in Fig. a, $2\phi + 60° = 180°$ or $\phi = 60°$. Thus, $\frac{\theta}{2} = 90° - 60°$ or $\theta = 60° = \frac{\pi}{3}$ rad.

$$s_{AB} = vt = 300\left(40\right) = 12\ 000\ \text{ft}$$

Thus,

$$\rho = \frac{s_{AB}}{\theta} = \frac{12\ 000}{\pi/3} = \frac{36\ 000}{\pi}\ \text{ft}$$

$$a_n = \frac{v^2}{\rho} = \frac{300^2}{36\ 000/\pi} = 7.854\ \text{ft/s}^2$$

Since the airplane travels along the circular path with a constant speed, $a_t = 0$. Thus, the magnitude of the airplane's acceleration is

$$a = \sqrt{{a_t}^2 + {a_n}^2} = \sqrt{0^2 + 7.854^2} = 7.85\ \text{ft/s}^2 \qquad \textbf{Ans.}$$

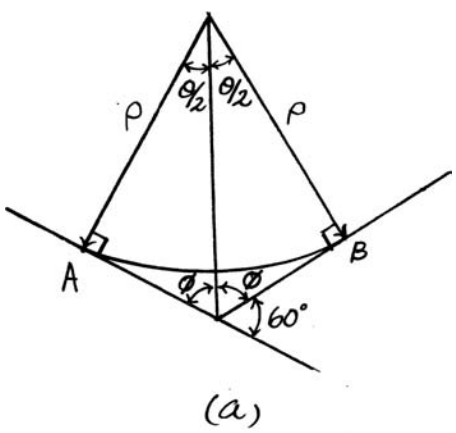

© 2010 Pearson Education, Inc., Upper Saddle River, NJ. All rights reserved. This material is protected under all copyright laws as they currently exist. No portion of this material may be reproduced, in any form or by any means, without permission in writing from the publisher.

***12–128.** The airplane flies along the horizontal circular path AB in 60 s. If its speed at point A is 400 ft/s, which decreases at a rate of $a_t = (-0.1t)$ ft/s^2, determine the magnitude of the plane's acceleration when it reaches point B.

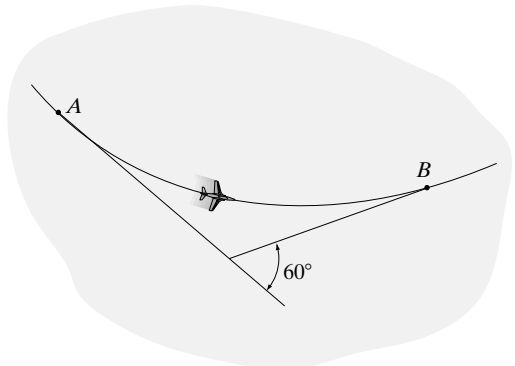

Velocity: Using the initial condition $v = 400$ ft/s when $t = 0$ s,

$$dv = a_t\,dt$$

$$\int_{400\text{ ft/s}}^{v} dv = \int_0^t -0.1t\,dt$$

$$v = \left(400 - 0.05t^2\right)\text{ ft/s}$$

Position: Using the initial condition $s = 0$ when $t = 0$ s,

$$\int ds = \int v\,dt$$

$$\int_0^s ds = \int_0^t \left(400 - 0.05t^2\right)dt$$

$$s = \left(400t - 0.01667t^3\right)\text{ ft}$$

Acceleration: From the geometry, $2\phi + 60° = 180°$ or $\phi = 60°$. Thus, $\frac{\theta}{2} = 90° - 60°$ or $\theta = 60° = \frac{\pi}{3}$ rad.

$$s_{AB} = 400(60) - 0.01667(60^3) = 20\,400\text{ ft}$$

$$\rho = \frac{s_{AB}}{\theta} = \frac{20\,400}{\pi/3} = \frac{61200}{\pi}\text{ ft}$$

$$v_B = 400 - 0.05(60^2) = 220\text{ ft/s}$$

$$(a_n)_B = \frac{{v_B}^2}{\rho} = \frac{220^2}{61\,200/\pi} = 2.485\text{ ft/s}^2$$

$$(a_t)_B = \dot{v} = -0.1(60) = -6\text{ft/s}^2$$

The magnitude of the airplane's acceleration is

$$a = \sqrt{{a_t}^2 + {a_n}^2} = \sqrt{(-6)^2 + 2.485^2} = 6.49\text{ ft/s}^2 \qquad \textbf{Ans.}$$

© 2010 Pearson Education, Inc., Upper Saddle River, NJ. All rights reserved. This material is protected under all copyright laws as they currently exist. No portion of this material may be reproduced, in any form or by any means, without permission in writing from the publisher.

•12–129. When the roller coaster is at B, it has a speed of 25 m/s, which is increasing at $a_t = 3\ \text{m/s}^2$. Determine the magnitude of the acceleration of the roller coaster at this instant and the direction angle it makes with the x axis.

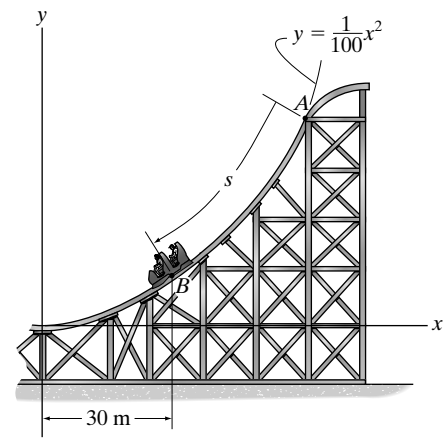

Radius of Curvature:

$$y = \frac{1}{100}x^2$$

$$\frac{dy}{dx} = \frac{1}{50}x$$

$$\frac{d^2y}{dx^2} = \frac{1}{50}$$

$$\rho = \frac{\left[1 + \left(\frac{dy}{dx}\right)^2\right]^{3/2}}{\left|\frac{d^2y}{dx^2}\right|} = \left.\frac{\left[1 + \left(\frac{1}{50}x\right)^2\right]^{3/2}}{\left|\frac{1}{50}\right|}\right|_{x=30\ \text{m}} = 79.30\ \text{m}$$

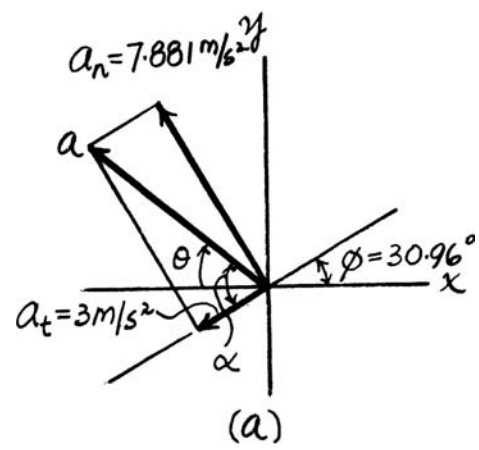

Acceleration:

$$a_t = \dot{v} = 3\ \text{m/s}^2$$

$$a_n = \frac{{v_B}^2}{\rho} = \frac{25^2}{79.30} = 7.881\ \text{m/s}^2$$

The magnitude of the roller coaster's acceleration is

$$a = \sqrt{{a_t}^2 + {a_n}^2} = \sqrt{3^2 + 7.881^2} = 8.43\ \text{m/s}^2 \qquad \textbf{Ans.}$$

The angle that the tangent at B makes with the x axis is $\phi = \tan^{-1}\left(\left.\frac{dy}{dx}\right|_{x=30\ \text{m}}\right) = \tan^{-1}\left[\frac{1}{50}(30)\right] = 30.96°$.

As shown in Fig. a, $\mathbf{a}_n$ is always directed towards the center of curvature of the path. Here, $\alpha = \tan^{-1}\left(\frac{a_n}{a_t}\right) = \tan^{-1}\left(\frac{7.881}{3}\right) = 69.16°$. Thus, the angle θ that the roller coaster's acceleration makes with the x axis is

$$\theta = \alpha - \phi = 38.2° \qquad \textbf{Ans.}$$

© 2010 Pearson Education, Inc., Upper Saddle River, NJ. All rights reserved. This material is protected under all copyright laws as they currently exist. No portion of this material may be reproduced, in any form or by any means, without permission in writing from the publisher.

12–130. If the roller coaster starts from rest at A and its speed increases at $a_t = (6 - 0.06s)\ \text{m/s}^2$, determine the magnitude of its acceleration when it reaches B where $s_B = 40$ m.

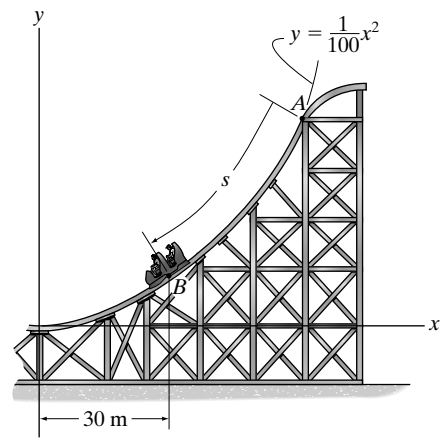

Velocity: Using the initial condition $v = 0$ at $s = 0$,

$$dv = a_t\, dt$$

$$\int_0^v v dv = \int_0^s \left(6 - 0.06s\right) ds$$

$$v = \left(\sqrt{12s - 0.06s^2}\right)\ \text{m/s} \qquad \textbf{(1)}$$

Thus,

$$v_B = \sqrt{12\left(40\right) - 0.06\left(40\right)^2} = 19.60\ \text{m/s}$$

Radius of Curvature:

$$y = \frac{1}{100}x^2$$

$$\frac{dy}{dx} = \frac{1}{50}x$$

$$\frac{d^2y}{dx^2} = \frac{1}{50}$$

$$\rho = \left.\frac{\left[1 + \left(\frac{dy}{dx}\right)^2\right]^{3/2}}{\left|\frac{d^2y}{dx^2}\right|} = \frac{\left[1 + \left(\frac{1}{50}x\right)^2\right]^{3/2}}{\left|\frac{1}{50}\right|}\right|_{x=30\ \text{m}} = 79.30\ \text{m}$$

Acceleration:

$$a_t = \dot{v} = 6 - 0.06(40) = 3.600\ \text{m/s}^2$$

$$a_n = \frac{v^2}{\rho} = \frac{19.60^2}{79.30} = 4.842\ \text{m/s}^2$$

The magnitude of the roller coaster's acceleration at B is

$$a = \sqrt{a_t{}^2 + a_n{}^2} = \sqrt{3.600^2 + 4.842^2} = 6.03\ \text{m/s}^2 \qquad \textbf{Ans.}$$

© 2010 Pearson Education, Inc., Upper Saddle River, NJ. All rights reserved. This material is protected under all copyright laws as they currently exist. No portion of this material may be reproduced, in any form or by any means, without permission in writing from the publisher.

12–131. The car is traveling at a constant speed of 30 m/s. The driver then applies the brakes at A and thereby reduces the car's speed at the rate of $a_t = (-0.08v)\ \text{m/s}^2$, where v is in m/s. Determine the acceleration of the car just before it reaches point C on the circular curve. It takes 15 s for the car to travel from A to C.

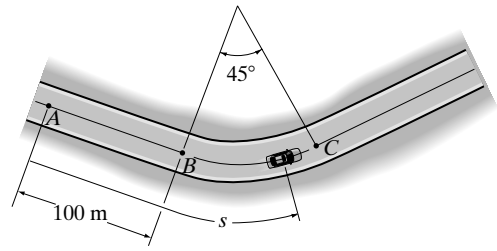

Velocity: Using the initial condition $v = 30$ m/s when $t = 0$ s,

$$dt = \frac{dv}{a}$$

$$\int_0^t dt = \int_{30\ \text{m/s}}^{v} -\frac{dv}{0.08v}$$

$$t = 12.5\ \text{In}\ \frac{30}{v}$$

$$v = \left(30e^{-0.08t}\right)\ \text{m/s} \qquad \textbf{(1)}$$

Position: Using the initial condition $s = 0$ when $t = 0$ s,

$$ds = vdt$$

$$\int_0^s ds = \int_0^t 30e^{-0.08t}\,dt$$

$$s = \left[375\left(1 - e^{-0.08t}\right)\right]\ \text{m} \qquad \textbf{(2)}$$

Acceleration:

$$s_C = 375\left(1 - e^{-0.08(15)}\right) = 262.05\ \text{m}$$

$$s_{BC} = s_C - s_B = 262.05 - 100 = 162.05\ \text{m}$$

$$\rho = \frac{s_{BC}}{\theta} = \frac{162.05}{\pi/4} = 206.33\ \text{m}$$

$$v_C = 30e^{-0.08(15)} = 9.036\ \text{m/s}$$

$$\left(a_n\right)_C = \frac{{v_C}^2}{\rho} = \frac{9.036^2}{206.33} = 0.3957\ \text{m/s}^2$$

$$\left(a_t\right)_C = \dot{v} = -0.08(9.036) = -0.7229\ \text{m/s}^2$$

The magnitude of the car's acceleration at point C is

$$a = \sqrt{(a_t)_C{}^2 + (a_n)_C{}^2} = \sqrt{(-0.7229)^2 + 0.3957^2} = 0.824\ \text{m/s}^2 \qquad \textbf{Ans.}$$

© 2010 Pearson Education, Inc., Upper Saddle River, NJ. All rights reserved. This material is protected under all copyright laws as they currently exist. No portion of this material may be reproduced, in any form or by any means, without permission in writing from the publisher.

***12–132.** The car is traveling at a speed of 30 m/s. The driver applies the brakes at A and thereby reduces the speed at the rate of $a_t = \left(-\frac{1}{8}t\right)$ m/s^2, where t is in seconds. Determine the acceleration of the car just before it reaches point C on the circular curve. It takes 15 s for the car to travel from A to C.

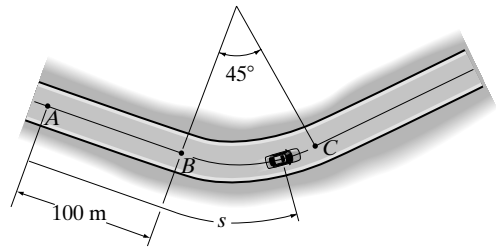

Velocity: Using the initial condition $v = 30$ m/s when $t = 0$ s,

$$dv = a_t\,dt$$

$$\int_{30\text{ m/s}}^{v} dv = \int_0^t -\frac{1}{8}\,t dt$$

$$v = \left(30 - \frac{1}{16}t^2\right)\text{m/s}$$

Position: Using the initial condition $s = 0$ when $t = 0$ s,

$$ds = vdt$$

$$\int_0^s ds = \int_0^t \left(30 - \frac{1}{16}t^2\right)dt$$

$$s = \left(30t - \frac{1}{48}t^3\right)\text{m}$$

Acceleration:

$$s_C = 30(15) - \frac{1}{48}\left(15^3\right) = 379.6875\text{ m}$$

$$s_{BC} = s_C - s_B = 379.6875 - 100 = 279.6875\text{ m}$$

$$\rho = \frac{s_{BC}}{\theta} = \frac{279.6875}{\pi/4} = 356.11\text{ m}$$

$$v_C = 30 - \frac{1}{16}\left(15^2\right) = 15.9375\text{ m/s}$$

$$\left(a_t\right)_C = \dot{v} = -\frac{1}{8}(15) = -1.875\text{ m/s}^2$$

$$\left(a_n\right)_C = \frac{{v_C}^2}{\rho} = \frac{15.9375^2}{356.11} = 0.7133\text{ m/s}^2$$

The magnitude of the car's acceleration at point C is

$$a = \sqrt{\left(a_t\right)_C{}^2 + \left(a_n\right)_C{}^2} = \sqrt{\left(-1.875\right)^2 + 0.7133^2} = 2.01\text{ m/s}^2 \qquad \textbf{Ans.}$$

© 2010 Pearson Education, Inc., Upper Saddle River, NJ. All rights reserved. This material is protected under all copyright laws as they currently exist. No portion of this material may be reproduced, in any form or by any means, without permission in writing from the publisher.

•12–133. A particle is traveling along a circular curve having a radius of 20 m. If it has an initial speed of 20 m/s and then begins to decrease its speed at the rate of $a_t = (-0.25s)\,\text{m/s}^2$, determine the magnitude of the acceleration of the particle two seconds later.

Velocity: Using the initial condition $v = 20$ m/s at $s = 0$.

$$vdv = ads$$

$$\int_{20\text{ m/s}}^{v} vdv = \int_0^s -0.25\,sds$$

$$v = \left(\sqrt{400 - 0.25s^2}\right)\text{m/s}$$

Position: Using the initial condition $s = 0$ when $t = 0$ s.

$$dt = \frac{ds}{v}$$

$$\int_0^t dt = \int_0^s \frac{ds}{\sqrt{400 - 0.25s^2}} = 2\int_0^s \frac{ds}{\sqrt{1600 - s^2}}$$

$$t = 2\sin^{-3}\left(\frac{s}{40}\right)$$

$$s = \left(40\sin(t/2)\right)\text{m}$$

When $t = 2$ s,

$$s = 40\sin(2/2) = 33.659\text{ m}$$

Acceleration:

$$a_t = \dot{v} = -0.25(33.659) = -8.415\text{ m/s}^2$$

$$v = \sqrt{400 - 0.25\left(33.659^2\right)} = 10.81\text{ m/s}$$

$$a_n = \frac{v^2}{\rho} = \frac{10.81^2}{20} = 5.8385\text{ m/s}^2$$

The magnitude of the particle's acceleration is

$$a = \sqrt{a_t^2 + a_n^2} = \sqrt{\left(-8.415\right)^2 + 5.8385^2} = 10.2\text{ m/s}^2 \qquad \textbf{Ans.}$$

© 2010 Pearson Education, Inc., Upper Saddle River, NJ. All rights reserved. This material is protected under all copyright laws as they currently exist. No portion of this material may be reproduced, in any form or by any means, without permission in writing from the publisher.

12–134. A racing car travels with a constant speed of 240 km/h around the elliptical race track. Determine the acceleration experienced by the driver at A.

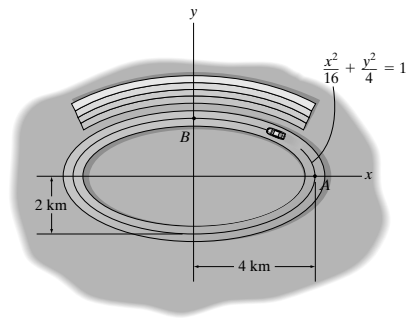

Radius of Curvature:

$$y^2 = 4\left(1 - \frac{x^2}{16}\right)$$

$$2y\frac{dy}{dx} = -\frac{x}{2} \qquad \textbf{(1)}$$

$$\frac{dy}{dx} = -\frac{x}{4y} \qquad \textbf{(2)}$$

Differentiating Eq. (1),

$$2\left(\frac{dy}{dx}\right)\left(\frac{dy}{dx}\right) + 2y\frac{d^2y}{dx^2} = -\frac{1}{2}$$

$$\frac{d^2y}{dx^2} = \frac{-\frac{1}{2} - 2\left(\frac{dy}{dx}\right)^2}{2y}$$

$$\frac{d^2y}{dx^2} = -\left[\frac{1 + 4\left(\frac{dy}{dx}\right)^2}{4y}\right] \qquad \textbf{(3)}$$

Substituting Eq. (2) into Eq. (3) yields

$$\frac{d^2y}{dx^2} = -\left[\frac{4y^2 + x^2}{16y^3}\right]$$

Thus,

$$\rho = \frac{\left[1 + \left(\frac{dy}{dx}\right)^2\right]^{3/2}}{\left|\frac{d^2y}{dx^2}\right|} = \frac{\left[1 + \left(-\frac{x}{4y}\right)^2\right]^{3/2}}{\left|\frac{4y^2 + x^2}{16y^3}\right|} = \frac{\left(1 + \frac{x^2}{16y^2}\right)^{3/2}}{\left(\frac{4y^2 + x^2}{16y^3}\right)} = \frac{\left(16y^2 + x^2\right)^{3/2}}{4\left(4y^2 + x^2\right)}$$

Acceleration: Since the race car travels with a constant speed along the track, $a_t = 0$. At $x = 4$ km and $y = 0$,

$$\rho_A = \left.\frac{\left(16y^2 + x^2\right)^{3/2}}{4\left(4y^2 + x^2\right)}\right|_{\substack{x=4\text{ km}\\ y=0}} = \frac{\left(0 + 4^2\right)^{3/2}}{4\left(0 + 4^2\right)} = 1\text{ km} = 1000\text{ m}$$

The speed of the race car is

$$v = \left(240\,\frac{\text{km}}{\text{h}}\right)\left(\frac{1000\text{ m}}{1\text{ km}}\right)\left(\frac{1\text{h}}{3600\text{ s}}\right) = 66.67\text{ m/s}$$

Thus,

$$a_A = \frac{v^2}{\rho_A} = \frac{66.67^2}{1000} = 4.44\text{ m/s}^2 \qquad \textbf{Ans.}$$

© 2010 Pearson Education, Inc., Upper Saddle River, NJ. All rights reserved. This material is protected under all copyright laws as they currently exist. No portion of this material may be reproduced, in any form or by any means, without permission in writing from the publisher.

12–135. The racing car travels with a constant speed of 240 km/h around the elliptical race track. Determine the acceleration experienced by the driver at B.

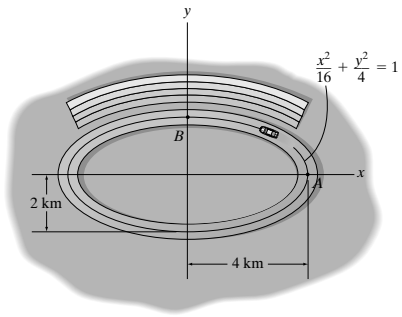

Radius of Curvature:

$$y^2 = 4\left(1 - \frac{x^2}{16}\right)$$

$$2y\frac{dy}{dx} = -\frac{x}{2} \qquad \textbf{(1)}$$

$$\frac{dy}{dx} = -\frac{x}{4y} \qquad \textbf{(2)}$$

Differentiating Eq. (1),

$$2\left(\frac{dy}{dx}\right)\left(\frac{dy}{dx}\right) + 2y\frac{d^2y}{dx^2} = -\frac{1}{2}$$

$$\frac{d^2y}{dx^2} = \frac{-\frac{1}{2} - 2\left(\frac{dy}{dx}\right)^2}{2y}$$

$$\frac{d^2y}{dx^2} = -\left[\frac{1 + 4\left(\frac{dy}{dx}\right)^2}{4y}\right] \qquad \textbf{(3)}$$

Substituting Eq. (2) into Eq. (3) yields

$$\frac{d^2y}{dx^2} = -\left[\frac{4y^2 + x^2}{16\,y^3}\right]$$

Thus,

$$\rho = \frac{\left[1+\left(\frac{dy}{dx}\right)^2\right]^{3/2}}{\left|\frac{d^2y}{dx^2}\right|} = \frac{\left[1+\left(-\frac{x}{4y}\right)^2\right]^{3/2}}{\left|\frac{4y^2 + x^2}{16y^3}\right|} = \frac{\left(1 + \frac{x^2}{16y^2}\right)^{3/2}}{\left(\frac{4y^2 + x^2}{16y^3}\right)} = \frac{\left(16y^2 + x^2\right)^{3/2}}{4\left(4y^2 + x^2\right)}$$

Acceleration: Since the race car travels with a constant speed along the track, $a_t = 0$.
At $x = 0$ and $y = 2$ km

$$\rho_B = \left.\frac{\left(16y^2 + x^2\right)^{3/2}}{4\left(4y^2 + x^2\right)}\right|_{\substack{x=0\\ y=2\text{ km}}} = \frac{\left[16\left(2^2\right) + 0\right]^{3/2}}{4\left[4\left(2^2\right) + 0\right]} = 8\text{ km} = 8000\text{ m}$$

The speed of the car is

$$v = \left(240\,\frac{\text{km}}{\text{h}}\right)\left(\frac{1000\text{ m}}{1\text{ km}}\right)\left(\frac{1\text{ h}}{3600\text{ s}}\right) = 66.67\text{ m/s}$$

Thus,

$$a_B = \frac{v^2}{\rho_B} = \frac{66.67^2}{8000} = 0.556\text{ m/s}^2 \qquad \textbf{Ans.}$$

© 2010 Pearson Education, Inc., Upper Saddle River, NJ. All rights reserved. This material is protected under all copyright laws as they currently exist. No portion of this material may be reproduced, in any form or by any means, without permission in writing from the publisher.

***12–136.** The position of a particle is defined by $\mathbf{r} = \{2\sin(\frac{\pi}{4})t\mathbf{i} + 2\cos(\frac{\pi}{4})t\mathbf{j} + 3t\mathbf{k}\}$ m, where t is in seconds. Determine the magnitudes of the velocity and acceleration at any instant.

Velocity:

$$\mathbf{r} = \left[2\sin\left(\frac{\pi}{4}t\right)\mathbf{i} + 2\cos\left(\frac{\pi}{4}t\right)\mathbf{j} + 3t\mathbf{k}\right]\text{ m}$$

$$\mathbf{v} = \frac{dr}{dt} = \left[\frac{\pi}{2}\cos\left(\frac{\pi}{4}t\right)\mathbf{i} - \frac{\pi}{2}\sin\left(\frac{\pi}{4}t\right)\mathbf{j} + 3\mathbf{k}\right]\text{ m/s}$$

The magnitude of the velocity is

$$v = \sqrt{v_x{}^2 + v_y{}^2 + v_z{}^2} = \sqrt{\left(\frac{\pi}{2}\cos\frac{\pi}{4}t\right)^2 + \left(-\frac{\pi}{2}\sin\frac{\pi}{4}t\right)^2 + 3^2}$$

$$= \sqrt{\frac{\pi^2}{4} + 9} = 3.39\text{ m/s}$$ **Ans.**

Acceleration:

$$\mathbf{a} = \frac{d\mathbf{v}}{dt} = \left[-\frac{\pi^2}{8}\sin\left(\frac{\pi}{4}t\right)\mathbf{i} - \frac{\pi^2}{8}\cos\left(\frac{\pi}{4}t\right)\mathbf{j}\right]\text{ m/s}^2$$

Thus, the magnitude of the particle's acceleration is

$$a = \sqrt{a_x{}^2 + a_y{}^2 + a_z{}^2} = \sqrt{\left(-\frac{\pi^2}{8}\sin\frac{\pi}{4}t\right)^2 + \left(-\frac{\pi^2}{8}\cos\frac{\pi}{4}t\right)^2} = \frac{\pi^2}{8}\text{ m/s}^2 = 1.23\text{ m/s}^2$$ **Ans.**

© 2010 Pearson Education, Inc., Upper Saddle River, NJ. All rights reserved. This material is protected under all copyright laws as they currently exist. No portion of this material may be reproduced, in any form or by any means, without permission in writing from the publisher.

•12–137. The position of a particle is defined by $\mathbf{r} = \{t^3\mathbf{i} + 3t^2\mathbf{j} + 8t\mathbf{k}\}$ m, where t is in seconds. Determine the magnitude of the velocity and acceleration and the radius of curvature of the path when $t = 2$ s.

Velocity:

$$\mathbf{r} = \left[t^3\mathbf{i} + 3t^2\mathbf{j} + 8t\mathbf{k}\right] \text{ m}$$

$$\mathbf{v} = \frac{d\mathbf{r}}{dt} = \left[3t^2\mathbf{i} + 6t\mathbf{j} + 8\mathbf{k}\right] \text{ m/s}$$

When $t = 2$ s,

$$\mathbf{v} = \left[3\left(2^2\right)\mathbf{i} + 6\left(2\right)\mathbf{j} + 8\mathbf{k}\right] = [12\mathbf{i} + 12\mathbf{j} + 8\mathbf{k}] \text{ m/s}$$

The magnitude of the velocity is

$$v = \sqrt{v_x{}^2 + v_y{}^2 + v_z{}^2} = \sqrt{12^2 + 12^2 + 8^2} = 18.76 = 18.8 \text{ m/s} \qquad \textbf{Ans.}$$

Acceleration:

$$\mathbf{a} = \frac{d\mathbf{v}}{dt} = [6t\mathbf{i} + 6\mathbf{j}] \text{ m/s}^2$$

When $t = 2$ s,

$$a = \left[6\left(2\right)\mathbf{i} + 6\mathbf{j}\right] = [12\mathbf{i} + 6\mathbf{j}] \text{ m/s}^2$$

Thus, the magnitude of the particle's acceleration is

$$a = \sqrt{a_x{}^2 + a_y{}^2 + a_z{}^2} = \sqrt{12^2 + 6^2 + 0^2} = 13.42 = 13.4 \text{ m/s}^2 \qquad \textbf{Ans.}$$

Since $\mathbf{a}_t$ is parallel to $\mathbf{v}$, its magnitude can be obtained by the vector dot product $a_t = \mathbf{a} \cdot \mathbf{u}_v$, where $\mathbf{u}_v = \dfrac{\mathbf{v}}{v} = 0.6396\mathbf{i} + 0.6396\mathbf{j} + 0.4264\mathbf{k}$. Thus,

$$a_t = \left(12\mathbf{i} + 6\mathbf{j}\right) \cdot \left(0.6396\mathbf{i} + 0.6396\mathbf{j} + 0.4264\mathbf{k}\right) = 11.51 \text{ m/s}^2$$

Thus,

$$a = \sqrt{a_t{}^2 + a_n{}^2}$$

$$13.42 = \sqrt{11.51^2 + a_n{}^2}$$

$$a_n = 6.889 \text{ m/s}^2$$

$$a_n = \frac{v^2}{\rho}$$

$$6.889 = \frac{18.76^2}{\rho}$$

$$\rho = 51.1 \text{ m} \qquad \textbf{Ans.}$$

© 2010 Pearson Education, Inc., Upper Saddle River, NJ. All rights reserved. This material is protected under all copyright laws as they currently exist. No portion of this material may be reproduced, in any form or by any means, without permission in writing from the publisher.

12–138. Car B turns such that its speed is increased by $(a_t)_B = (0.5e^t)\ \text{m/s}^2$, where t is in seconds. If the car starts from rest when $\theta = 0°$, determine the magnitudes of its velocity and acceleration when the arm AB rotates $\theta = 30°$. Neglect the size of the car.

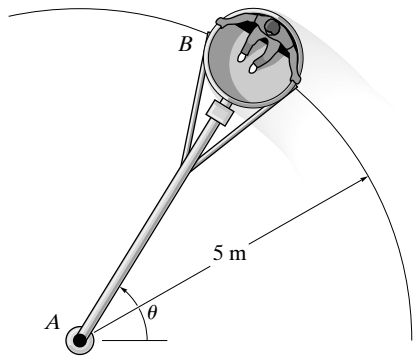

Velocity: The speed v in terms of time t can be obtained by applying $a = \dfrac{dv}{dt}$.

$$dv = adt$$

$$\int_0^v dv = \int_0^t 0.5e^t\,dt$$

$$v = 0.5\left(e^t - 1\right) \qquad \textbf{[1]}$$

When $\theta = 30°$, the car has traveled a distance of $s = r\theta = 5\left(\dfrac{30°}{180°}\pi\right) = 2.618\ \text{m}$.

The time required for the car to travel this distance can be obtained by applying $v = \dfrac{ds}{dt}$.

$$ds = vdt$$

$$\int_0^{2.618\ \text{m}} ds = \int_0^t 0.5\left(e^t - 1\right)dt$$

$$2.618 = 0.5\left(e^t - t - 1\right)$$

Solving by trial and error $\quad t = 2.1234\ \text{s}$

Substituting $t = 2.1234\ \text{s}$ into Eq. [1] yields

$$v = 0.5\left(e^{2.1234} - 1\right) = 3.680\ \text{m/s} = 3.68\ \text{m/s} \qquad \textbf{Ans.}$$

Acceleration: The tangential acceleration for the car at $t = 2.1234\ \text{s}$ is $a_t = 0.5e^{2.1234} = 4.180\ \text{m/s}^2$. To determine the normal acceleration, apply Eq. 12–20.

$$a_n = \frac{v^2}{\rho} = \frac{3.680^2}{5} = 2.708\ \text{m/s}^2$$

The magnitude of the acceleration is

$$a = \sqrt{a_t^2 + a_n^2} = \sqrt{4.180^2 + 2.708^2} = 4.98\ \text{m/s}^2 \qquad \textbf{Ans.}$$

© 2010 Pearson Education, Inc., Upper Saddle River, NJ. All rights reserved. This material is protected under all copyright laws as they currently exist. No portion of this material may be reproduced, in any form or by any means, without permission in writing from the publisher.

12–139. Car B turns such that its speed is increased by $(a_t)_B = (0.5e^t)\ \text{m/s}^2$, where t is in seconds. If the car starts from rest when $\theta = 0°$, determine the magnitudes of its velocity and acceleration when $t = 2$ s. Neglect the size of the car.

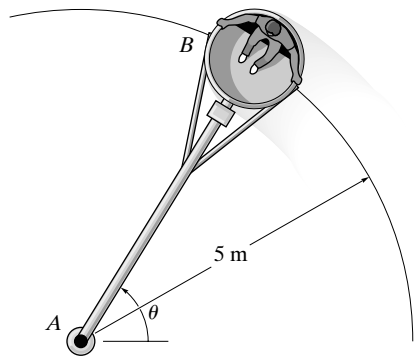

Velocity: The speed v in terms of time t can be obtained by applying $a = \dfrac{dv}{dt}$.

$$dv = adt$$

$$\int_0^v dv = \int_0^t 0.5e^t\, dt$$

$$v = 0.5\left(e^t - 1\right)$$

When $t = 2$ s, $\quad v = 0.5\left(e^2 - 1\right) = 3.195\ \text{m/s} = 3.19\ \text{m/s}$ **Ans.**

Acceleration: The tangential acceleration of the car at $t = 2$ s is $a_t = 0.5e^2 = 3.695\ \text{m/s}^2$. To determine the normal acceleration, apply Eq. 12–20.

$$a_n = \frac{v^2}{\rho} = \frac{3.195^2}{5} = 2.041\ \text{m/s}^2$$

The magnitude of the acceleration is

$$a = \sqrt{a_t^2 + a_n^2} = \sqrt{3.695^2 + 2.041^2} = 4.22\ \text{m/s}^2$$ **Ans.**

***12–140.** The truck travels at a speed of 4 m/s along a circular road that has a radius of 50 m. For a short distance from $s = 0$, its speed is then increased by $a_t = (0.05s)\ \text{m/s}^2$, where s is in meters. Determine its speed and the magnitude of its acceleration when it has moved $s = 10$ m.

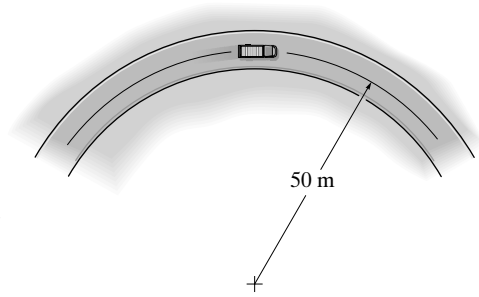

Velocity: The speed v in terms of position s can be obtained by applying $vdv = ads$.

$$vdv = ads$$

$$\int_{4\ \text{m/s}}^v vdv = \int_0^s 0.05sds$$

$$v = \left(\sqrt{0.05s^2 + 16}\right)\ \text{m/s}$$

At $s = 10$ m, $\quad v = \sqrt{0.05(10^2) + 16} = 4.583\ \text{m/s} = 4.58\ \text{m/s}$ **Ans.**

Acceleration: The tangential acceleration of the truck at $s = 10$ m is $a_t = 0.05\ (10) = 0.500\ \text{m/s}^2$. To determine the normal acceleration, apply Eq. 12–20.

$$a_n = \frac{v^2}{\rho} = \frac{4.583^2}{50} = 0.420\ \text{m/s}^2$$

The magnitude of the acceleration is

$$a = \sqrt{a_t^2 + a_n^2} = \sqrt{0.500^2 + 0.420^2} = 0.653\ \text{m/s}^2$$ **Ans.**

© 2010 Pearson Education, Inc., Upper Saddle River, NJ. All rights reserved. This material is protected under all copyright laws as they currently exist. No portion of this material may be reproduced, in any form or by any means, without permission in writing from the publisher.

•12–141. The truck travels along a circular road that has a radius of 50 m at a speed of 4 m/s. For a short distance when $t = 0$, its speed is then increased by $a_t = (0.4t)\ \text{m/s}^2$, where t is in seconds. Determine the speed and the magnitude of the truck's acceleration when $t = 4$ s.

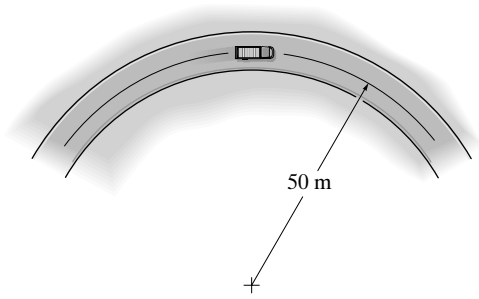

Velocity: The speed v in terms of time t can be obtained by applying $a = \dfrac{dv}{dt}$.

$$dv = a\,dt$$

$$\int_{4\ \text{m/s}}^{v} dv = \int_0^t 0.4t\,dt$$

$$v = \left(0.2t^2 + 4\right)\ \text{m/s}$$

When $t = 4$ s, $\quad v = 0.2\left(4^2\right) + 4 = 7.20\ \text{m/s}$ **Ans.**

Acceleration: The tangential acceleration of the truck when $t = 4$ s is $a_t = 0.4(4) = 1.60\ \text{m/s}^2$. To determine the normal acceleration, apply Eq. 12–20.

$$a_n = \frac{v^2}{\rho} = \frac{7.20^2}{50} = 1.037\ \text{m/s}^2$$

The magnitude of the acceleration is

$$a = \sqrt{a_t^2 + a_n^2} = \sqrt{1.60^2 + 1.037^2} = 1.91\ \text{m/s}^2$$ **Ans.**

© 2010 Pearson Education, Inc., Upper Saddle River, NJ. All rights reserved. This material is protected under all copyright laws as they currently exist. No portion of this material may be reproduced, in any form or by any means, without permission in writing from the publisher.

12–142. Two cyclists, A and B, are traveling counterclockwise around a circular track at a constant speed of 8 ft/s at the instant shown. If the speed of A is increased at $(a_t)_A = (s_A)\ \text{ft/s}^2$, where s_A is in feet, determine the distance measured counterclockwise along the track from B to A between the cyclists when $t = 1$ s. What is the magnitude of the acceleration of each cyclist at this instant?

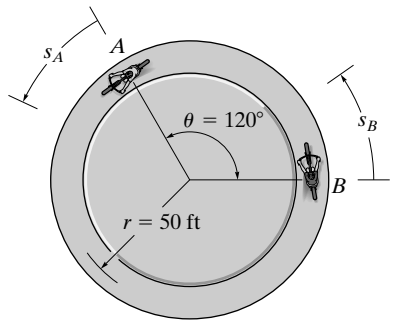

Distance Traveled: Initially, the distance between the cyclists is $d_0 = \rho\theta = 50\left(\frac{120°}{180°}\pi\right) = 104.72$ ft. When $t = 1$ s, cyclist B travels a distance of $s_B = 8(1) = 8$ ft. The distance traveled by cyclist A can be obtained as follows

$$v_A dv_A = a_A\, ds_A$$

$$\int_{8\ \text{ft/s}}^{v_A} v_A\, dv_A = \int_0^{s_A} s_A\, ds_A$$

$$v_A = \sqrt{s_A^2 + 64} \qquad \textbf{[1]}$$

$$dt = \frac{ds_A}{v_A}$$

$$\int_0^{1s} dt = \int_0^{s_A} \frac{ds_A}{\sqrt{s_A^2 + 64}}$$

$$1 = \sinh^{-1}\left(\frac{s_A}{8}\right)$$

$$s_A = 9.402\ \text{ft}$$

Thus, the distance between the two cyclists after $t = 1$ s is

$$d = d_0 + s_A - s_B = 104.72 + 9.402 - 8 = 106\ \text{ft} \qquad \textbf{Ans.}$$

Acceleration: The tangential acceleration for cyclist A and B at $t = 1$ s is $(a_t)_A = s_A = 9.402\ \text{ft/s}^2$ and $(a_t)_B = 0$ (cyclist B travels at constant speed), respectively. At $t = 1$ s, from Eq. [1], $v_A = \sqrt{9.402^2 + 64} = 12.34$ ft/s. To determine normal acceleration, apply Eq. 12–20.

$$(a_n)_A = \frac{v_A^2}{\rho} = \frac{12.34^2}{50} = 3.048\ \text{ft/s}^2$$

$$(a_n)_B = \frac{v_B^2}{\rho} = \frac{8^2}{50} = 1.28\ \text{ft/s}^2$$

The magnitude of the acceleration for cyclist A and B are

$$a_A = \sqrt{(a_t)_A^2 + (a_n)_A^2} = \sqrt{9.402^2 + 3.048^2} = 9.88\ \text{ft/s}^2 \qquad \textbf{Ans.}$$

$$a_B = \sqrt{(a_t)_B^2 + (a_n)_B^2} = \sqrt{0^2 + 1.28^2} = 1.28\ \text{ft/s}^2 \qquad \textbf{Ans.}$$

© 2010 Pearson Education, Inc., Upper Saddle River, NJ. All rights reserved. This material is protected under all copyright laws as they currently exist. No portion of this material may be reproduced, in any form or by any means, without permission in writing from the publisher.

12–143. A toboggan is traveling down along a curve which can be approximated by the parabola $y = 0.01x^2$. Determine the magnitude of its acceleration when it reaches point A, where its speed is $v_A = 10$ m/s, and it is increasing at the rate of $(a_t)_A = 3$ m/s^2.

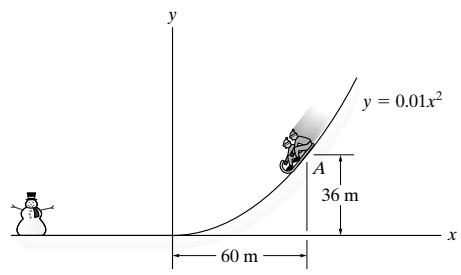

Acceleration: The radius of curvature of the path at point A must be determined first. Here, $\frac{dy}{dx} = 0.02x$ and $\frac{d^2y}{dx^2} = 0.02$, then

$$\rho = \frac{[1 + (dy/dx)^2]^{3/2}}{|d^2y/dx^2|} = \left.\frac{[1 + (0.02x)^2]^{3/2}}{|0.02|}\right|_{x=60\text{ m}} = 190.57\text{ m}$$

To determine the normal acceleration, apply Eq. 12–20.

$$a_n = \frac{v^2}{\rho} = \frac{10^2}{190.57} = 0.5247\text{ m/s}^2$$

Here, $a_t = \dot{v}_A = 3$ m/s. Thus, the magnitude of accleration is

$$a = \sqrt{a_t^2 + a_n^2} = \sqrt{3^2 + 0.5247^2} = 3.05\text{ m/s}^2 \qquad \textbf{Ans.}$$

***12–144.** The jet plane is traveling with a speed of 120 m/s which is decreasing at 40 m/s^2 when it reaches point A. Determine the magnitude of its acceleration when it is at this point. Also, specify the direction of flight, measured from the x axis.

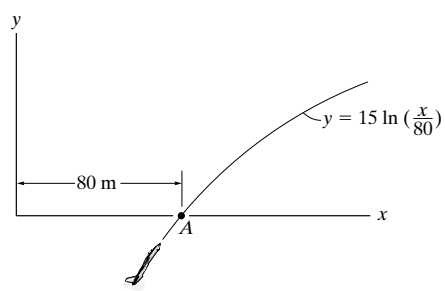

$$y = 15\ln\left(\frac{x}{80}\right)$$

$$\frac{dy}{dx} = \left.\frac{15}{x}\right|_{x=80\text{ m}} = 0.1875$$

$$\frac{d^2y}{dx^2} = -\left.\frac{15}{x^2}\right|_{x=80\text{ m}} = -0.002344$$

$$\left.\rho\right|_{x=80\text{ m}} = \left.\frac{\left[1 + \left(\frac{dy}{dx}\right)^2\right]^{3/2}}{\left|\frac{d^2y}{dx^2}\right|}\right|_{x\,=\,80\text{ m}}$$

$$= \frac{[1 + (0.1875)^2]^{3/2}}{|-0.002344|} = 449.4\text{ m}$$

$$a_n = \frac{v^2}{\rho} = \frac{(120)^2}{449.4} = 32.04\text{ m/s}^2$$

$$a_t = -40\text{ m/s}^2$$

$$a = \sqrt{(-40)^2 + (32.04)^2} = 51.3\text{ m/s}^2 \qquad \textbf{Ans.}$$

Since

$$\frac{dy}{dx} = \tan\theta = 0.1875$$

$$\theta = 10.6° \qquad \textbf{Ans.}$$

© 2010 Pearson Education, Inc., Upper Saddle River, NJ. All rights reserved. This material is protected under all copyright laws as they currently exist. No portion of this material may be reproduced, in any form or by any means, without permission in writing from the publisher.

•12–145. The jet plane is traveling with a constant speed of 110 m/s along the curved path. Determine the magnitude of the acceleration of the plane at the instant it reaches point A ($y = 0$).

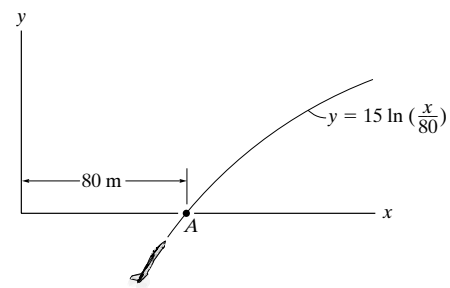

$$y = 15 \ln\left(\frac{x}{80}\right)$$

$$\frac{dy}{dx} = \left.\frac{15}{x}\right|_{x=80\text{ m}} = 0.1875$$

$$\frac{d^2y}{dx^2} = -\left.\frac{15}{x^2}\right|_{x=80\text{ m}} = -0.002344$$

$$\rho\Bigg|_{x=80\text{ m}} = \left.\frac{\left[1 + \left(\frac{dy}{dx}\right)^2\right]^{3/2}}{\left|\frac{d^2y}{dx^2}\right|}\right|_{x=80\text{ m}}$$

$$= \frac{\left[1 + (0.1875)^2\right]^{3/2}}{|-0.002344|} = 449.4\text{ m}$$

$$a_n = \frac{v^2}{\rho} = \frac{(110)^2}{449.4} = 26.9\text{ m/s}^2$$

Since the plane travels with a constant speed, $a_t = 0$. Hence

$$a = a_n = 26.9\text{ m/s}^2 \qquad \textbf{Ans.}$$

12–146. The motorcyclist travels along the curve at a constant speed of 30 ft/s. Determine his acceleration when he is located at point A. Neglect the size of the motorcycle and rider for the calculation.

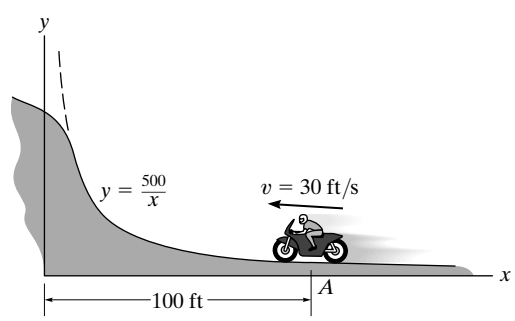

$$\frac{dy}{dx} = -\left.\frac{500}{x^2}\right|_{x=100\text{ ft}} = -0.05$$

$$\frac{d^2y}{dx^2} = \left.\frac{1000}{x^3}\right|_{x=100\text{ ft}} = 0.001$$

$$\rho\Bigg|_{x=100\text{ ft}} = \left.\frac{\left[1 + \left(\frac{dy}{dx}\right)^2\right]^{3/2}}{\left|\frac{d^2y}{dx^2}\right|}\right|_{x=100\text{ ft}}$$

$$= \frac{[1 + (-0.05)^2]^{3/2}}{|0.001|} = 1003.8\text{ ft}$$

$$a_n = \frac{v^2}{\rho} = \frac{30^2}{1003.8} = 0.897\text{ ft/s}^2$$

Since the motorcyclist travels with a constant speed, $a_t = 0$. Hence

$$a = a_n = 0.897\text{ ft/s}^2 \qquad \textbf{Ans.}$$

© 2010 Pearson Education, Inc., Upper Saddle River, NJ. All rights reserved. This material is protected under all copyright laws as they currently exist. No portion of this material may be reproduced, in any form or by any means, without permission in writing from the publisher.

12–147. The box of negligible size is sliding down along a curved path defined by the parabola $y = 0.4x^2$. When it is at A ($x_A = 2$ m, $y_A = 1.6$ m), the speed is $v_B = 8$ m/s and the increase in speed is $dv_B/dt = 4$ m/s^2. Determine the magnitude of the acceleration of the box at this instant.

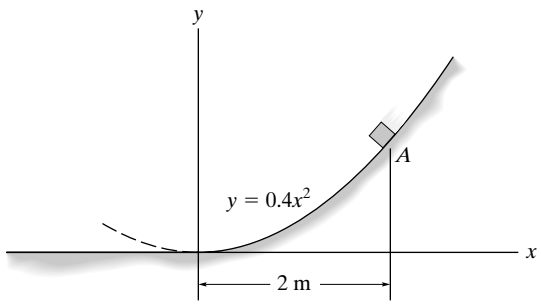

$$y = 0.4\,x^2$$

$$\left.\frac{dy}{dx}\right|_{x=2\text{ m}} = 0.8x\Big|_{x=2\text{ m}} = 1.6$$

$$\left.\frac{d^2y}{dx^2}\right|_{x=2\text{ m}} = 0.8$$

$$\rho = \left.\frac{\left[1 + \left(\frac{dy}{dx}\right)^2\right]^{3/2}}{\left|\frac{d^2y}{dx^2}\right|}\right|_{x=2\text{ m}} = \frac{\left[1 + (1.6)^2\right]^{3/2}}{|0.8|} = 8.396\text{ m}$$

$$a_n = \frac{{v_B}^2}{\rho} = \frac{8^2}{8.396} = 7.622\text{ m/s}^2$$

$$a = \sqrt{a_t^2 + a_n^2} = \sqrt{(4)^2 + (7.622)^2} = 8.61\text{ m/s}^2$$ **Ans.**

***12–148.** A spiral transition curve is used on railroads to connect a straight portion of the track with a curved portion. If the spiral is defined by the equation $y = (10^{-6})x^3$, where x and y are in feet, determine the magnitude of the acceleration of a train engine moving with a constant speed of 40 ft/s when it is at point $x = 600$ ft.

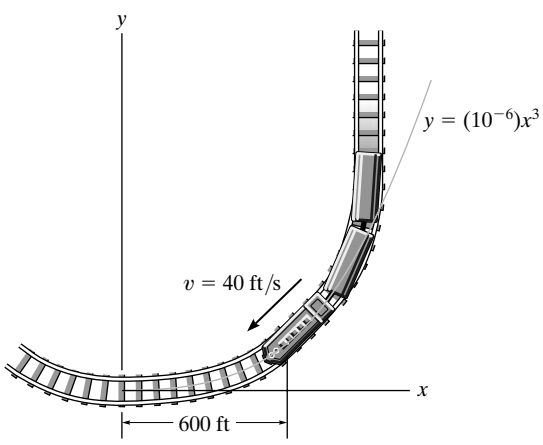

$$y = (10)^{-6}x^3$$

$$\left.\frac{dy}{dx}\right|_{x=600\text{ ft}} = 3(10)^{-6}x^2\Big|_{x=600\text{ ft}} = 1.08$$

$$\left.\frac{d^2y}{dx^2}\right|_{x=600\text{ ft}} = 6(10)^{-6}x\Big|_{x=600\text{ ft}} = 3.6(10)^{-3}$$

$$\rho\Big|_{x=600\text{ ft}} = \left.\frac{\left[1 + \left(\frac{dy}{dx}\right)^2\right]^{3/2}}{\left|\frac{d^2y}{dx^2}\right|}\right|_{x=600\text{ ft}} = \frac{[1 + (1.08)^2]^{3/2}}{|3.6(10)^{-3}|} = 885.7\text{ ft}$$

$$a_n = \frac{v^2}{\rho} = \frac{40^2}{885.7} = 1.81\text{ ft/s}^2$$

$$a = \sqrt{a_t^2 + a_n^2} = \sqrt{0 + (1.81)^2} = 1.81\text{ ft/s}^2$$ **Ans.**

© 2010 Pearson Education, Inc., Upper Saddle River, NJ. All rights reserved. This material is protected under all copyright laws as they currently exist. No portion of this material may be reproduced, in any form or by any means, without permission in writing from the publisher.

•12–149. Particles A and B are traveling counterclockwise around a circular track at a constant speed of 8 m/s. If at the instant shown the speed of A begins to increase by $(a_t)_A = (0.4s_A)\ \text{m/s}^2$, where s_A is in meters, determine the distance measured counterclockwise along the track from B to A when $t = 1$ s. What is the magnitude of the acceleration of each particle at this instant?

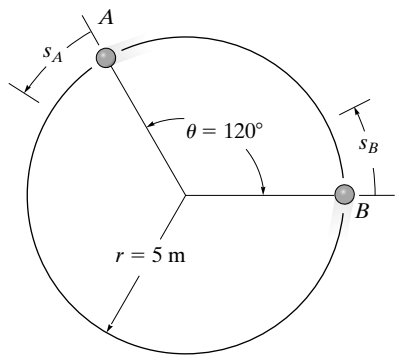

Distance Traveled: Initially the distance between the particles is

$$d_0 = \rho d\theta = 5\left(\frac{120°}{180°}\right)\pi = 10.47 \text{ m}$$

When $t = 1$ s, B travels a distance of

$$d_B = 8(1) = 8 \text{ m}$$

The distance traveled by particle A is determined as follows:

$$vdv = ads$$

$$\int_{8\text{ m/s}}^{v} vdv = \int_0^s 0.4\, sds$$

$$v = 0.6325\sqrt{s^2 + 160} \qquad \textbf{(1)}$$

$$dt = \frac{ds}{v}$$

$$\int_0^t dt = \int_0^s \frac{ds}{0.6325\sqrt{s^2 + 160}}$$

$$1 = \frac{1}{0.6325}\left(\text{In}\left[\frac{\sqrt{s^2 + 160} + s}{\sqrt{160}}\right]\right)$$

$$s = 8.544 \text{ m}$$

Thus the distance between the two cyclists after $t = 1$ s is

$$d = 10.47 + 8.544 - 8 = 11.0 \text{ m} \qquad \textbf{Ans.}$$

Acceleration:

For A, when $t = 1$ s,

$$(a_t)_A = \dot{v}_A = 0.4(8.544) = 3.4176 \text{ m/s}^2$$

$$v_A = 0.6325\sqrt{8.544^2 + 160} = 9.655 \text{ m/s}$$

$$(a_n)_A = \frac{v_A^2}{\rho} = \frac{9.655^2}{5} = 18.64 \text{ m/s}^2$$

The magnitude of the A's acceleration is

$$a_A = \sqrt{3.4176^2 + 18.64^2} = 19.0 \text{ m/s}^2 \qquad \textbf{Ans.}$$

For B, when $t = 1$ s,

$$(a_t)_B = \dot{v}_A = 0$$

$$(a_n)_B = \frac{v_B^2}{\rho} = \frac{8^2}{5} = 12.80 \text{ m/s}^2$$

The magnitude of the B's acceleration is

$$a_B = \sqrt{0^2 + 12.80^2} = 12.8 \text{ m/s}^2 \qquad \textbf{Ans.}$$

© 2010 Pearson Education, Inc., Upper Saddle River, NJ. All rights reserved. This material is protected under all copyright laws as they currently exist. No portion of this material may be reproduced, in any form or by any means, without permission in writing from the publisher.

12–150. Particles A and B are traveling around a circular track at a speed of 8 m/s at the instant shown. If the speed of B is increasing by $(a_t)_B = 4\ \text{m/s}^2$, and at the same instant A has an increase in speed of $(a_t)_A = 0.8t\ \text{m/s}^2$, determine how long it takes for a collision to occur. What is the magnitude of the acceleration of each particle just before the collision occurs?

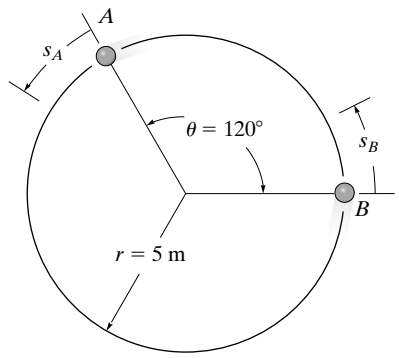

Distance Traveled: Initially the distance between the two particles is $d_0 = \rho\theta = 5\left(\frac{120°}{180°}\pi\right) = 10.47$ m. Since particle B travels with a constant acceleration, distance can be obtained by applying equation

$$s_B = (s_0)_B + (v_0)_B t + \frac{1}{2}a_c t^2$$

$$s_B = 0 + 8t + \frac{1}{2}(4)\,t^2 = \left(8t + 2t^2\right)\text{ m} \qquad \textbf{[1]}$$

The distance traveled by particle A can be obtained as follows.

$$dv_A = a_A\,dt$$

$$\int_{8\text{ m/s}}^{v_A} dv_A = \int_0^t 0.8\,t dt$$

$$v_A = \left(0.4t^2 + 8\right)\text{ m/s} \qquad \textbf{[2]}$$

$$ds_A = v_A\,dt$$

$$\int_0^{s_A} ds_A = \int_0^t \left(0.4t^2 + 8\right)dt$$

$$s_A = 0.1333t^3 + 8t$$

In order for the collision to occur

$$s_A + d_0 = s_B$$

$$0.1333t^3 + 8t + 10.47 = 8t + 2t^2$$

Solving by trial and error $\quad t = 2.5074\text{ s} = 2.51\text{ s}$ **Ans.**

Note: If particle A strikes B then, $s_A = 5\left(\frac{240°}{180°}\pi\right) + s_B$. This equation will result in $t = 14.6\text{ s} > 2.51\text{ s}$.

Acceleration: The tangential acceleration for particle A and B when $t = 2.5074$ are $(a_t)_A = 0.8t = 0.8\,(2.5074) = 2.006\text{ m/s}^2$ and $(a_t)_B = 4\text{ m/s}^2$, respectively. When $t = 2.5074$ s, from Eq. [1], $v_A = 0.4\left(2.5074^2\right) + 8 = 10.51$ m/s and $v_B = (v_0)_B + a_c t = 8 + 4(2.5074) = 18.03$ m/s. To determine the normal acceleration, apply Eq. 12–20.

$$(a_n)_A = \frac{v_A^2}{\rho} = \frac{10.51^2}{5} = 22.11\text{ m/s}^2$$

$$(a_n)_B = \frac{v_B^2}{\rho} = \frac{18.03^2}{5} = 65.01\text{ m/s}^2$$

The magnitude of the acceleration for particles A and B just before collision are

$$a_A = \sqrt{(a_t)_A^2 + (a_n)_A^2} = \sqrt{2.006^2 + 22.11^2} = 22.2\text{ m/s}^2 \qquad \textbf{Ans.}$$

$$a_B = \sqrt{(a_t)_B^2 + (a_n)_B^2} = \sqrt{4^2 + 65.01^2} = 65.1\text{ m/s}^2 \qquad \textbf{Ans.}$$

© 2010 Pearson Education, Inc., Upper Saddle River, NJ. All rights reserved. This material is protected under all copyright laws as they currently exist. No portion of this material may be reproduced, in any form or by any means, without permission in writing from the publisher.

12–151. The race car travels around the circular track with a speed of 16 m/s. When it reaches point A it increases its speed at $a_t = (\frac{4}{3}v^{1/4})$ m/s^2, where v is in m/s. Determine the magnitudes of the velocity and acceleration of the car when it reaches point B. Also, how much time is required for it to travel from A to B?

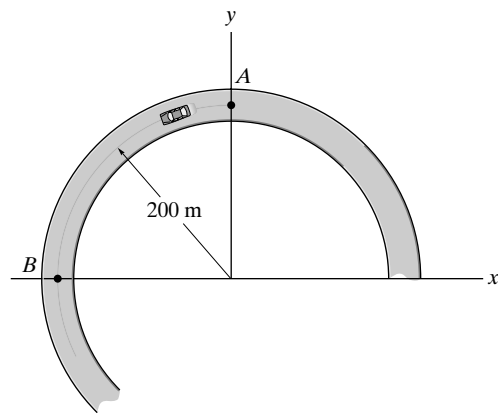

$$a_t = \frac{4}{3}v^{\frac{1}{4}}$$

$$dv = a_t\ dt$$

$$dv = \frac{4}{3}v^{\frac{1}{4}}\ dt$$

$$\int_{16}^{v} 0.75\frac{dv}{v^{\frac{1}{4}}} = \int_0^t dt$$

$$v^{\frac{1}{4}}\Big|_{16}^{v} = t$$

$$v^{\frac{3}{4}} - 8 = t$$

$$v = (t + 8)^{\frac{4}{3}}$$

$$ds = v\ dt$$

$$\int_0^s ds = \int_0^t (t + 8)^{\frac{4}{3}}\ dt$$

$$s = \frac{3}{7}(t + 8)^{\frac{7}{3}}\Big|_0^t$$

$$s = \frac{3}{7}(t + 8)^{\frac{7}{3}} - 54.86$$

For $s = \frac{\pi}{2}(200) = 100\pi = \frac{3}{7}(t + 8)^{\frac{7}{3}} - 54.86$

$t = 10.108\ s = 10.1\ s$ **Ans.**

$v = (10.108 + 8)^{\frac{4}{3}} = 47.551 = 47.6$ m/s **Ans.**

$$a_t = \frac{4}{3}(47.551)^{\frac{1}{4}} = 3.501 \text{ m/s}^2$$

$$a_n = \frac{v^2}{\rho} = \frac{(47.551)^2}{200} = 11.305 \text{ m/s}^2$$

$a = \sqrt{(3.501)^2 + (11.305)^2} = 11.8$ m/s^2 **Ans.**

© 2010 Pearson Education, Inc., Upper Saddle River, NJ. All rights reserved. This material is protected under all copyright laws as they currently exist. No portion of this material may be reproduced, in any form or by any means, without permission in writing from the publisher.

***12–152.** A particle travels along the path $y = a + bx + cx^2$, where a, b, c are constants. If the speed of the particle is constant, $v = v_0$, determine the x and y components of velocity and the normal component of acceleration when $x = 0$.

$$y = a + bx + cx^2$$

$$\dot{y} = b\dot{x} + 2\,c\,x\,\dot{x}$$

$$\ddot{y} = b\ddot{x} + 2c\,(\dot{x})^2 + 2c\,x\ddot{x}$$

When $x = 0$, $\quad \dot{y} = b\,\dot{x}$

$$v_0^2 + \dot{x}^2 + b^2\,\dot{x}^2$$

$$v_x = \dot{x} = \frac{v_0}{\sqrt{1 + b^2}}$$ **Ans.**

$$v_y = \frac{v_0\,b}{\sqrt{1 + b^2}}$$ **Ans.**

$$a_n = \frac{v_0^2}{\rho}$$

$$\rho = \frac{\left[1 + \left(\frac{dy}{dx}\right)^2\right]^{\frac{3}{2}}}{\left|\frac{d^2y}{dx^2}\right|}$$

$$\frac{dy}{dx} = b + 2c\,x$$

$$\frac{d^2y}{dx^2} = 2\,c$$

At $x = 0$, $\quad \rho = \dfrac{(1 + b^2)^{3/2}}{2\,c}$

$$a_n = \frac{2\,c\,v_0^2}{(1 + b^2)^{3/2}}$$ **Ans.**

© 2010 Pearson Education, Inc., Upper Saddle River, NJ. All rights reserved. This material is protected under all copyright laws as they currently exist. No portion of this material may be reproduced, in any form or by any means, without permission in writing from the publisher.

•12–153. The ball is kicked with an initial speed $v_A = 8$ m/s at an angle $\theta_A = 40°$ with the horizontal. Find the equation of the path, $y = f(x)$, and then determine the normal and tangential components of its acceleration when $t = 0.25$ s.

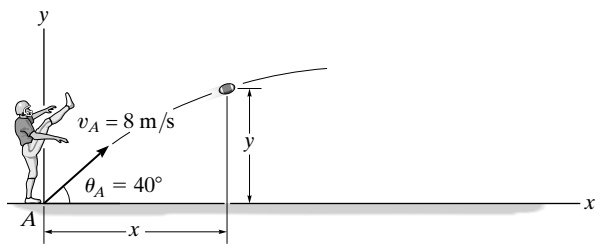

Horizontal Motion: The horizontal component of velocity is $(v_0)_x = 8 \cos 40° = 6.128$ m/s and the initial horizontal and final positions are $(s_0)_x = 0$ and $s_x = x$, respectively.

$(\overset{+}{\rightarrow})$ $$s_x = (s_0)_x + (v_0)_x t$$

$$x = 0 + 6.128t \qquad \textbf{[1]}$$

Vertical Motion: The vertical component of initial velocity is $(v_0)_y = 8 \sin 40° = 5.143$ m/s. The initial and final vertical positions are $(s_0)_y = 0$ and $s_y = y$, respectively.

$(+\uparrow)$ $$s_y = (s_0)_y + (v_0)_y t + \frac{1}{2}(a_c)_y t^2$$

$$y = 0 + 5.143t + \frac{1}{2}(-9.81)\left(t^2\right) \qquad \textbf{[2]}$$

Eliminate t from Eqs [1] and [2], we have

$$y = \{0.8391x - 0.1306x^2\}\text{ m} = \{0.839x - 0.131x^2\}\text{ m} \qquad \textbf{Ans.}$$

The tangent of the path makes an angle $\theta = \tan^{-1}\dfrac{3.644}{4} = 42.33°$ with the x axis.

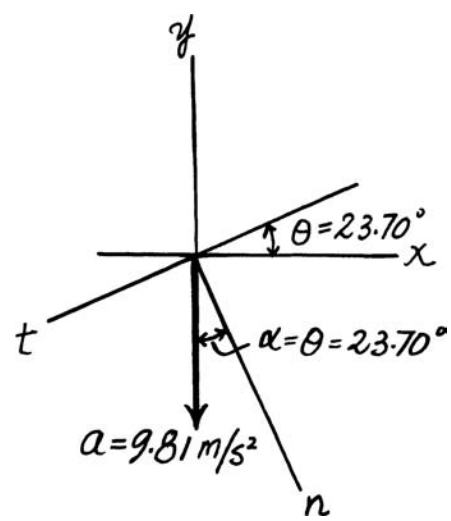

Acceleration: When $t = 0.25\ s$, from Eq. [1], $x = 0 + 6.128(0.25) = 1.532$ m. Here, $\dfrac{dy}{dx} = 0.8391 - 0.2612x$. At $x = 1.532$ m, $\dfrac{dy}{dx} = 0.8391 - 0.2612(1.532) = 0.4389$ and the tangent of the path makes an angle $\theta = \tan^{-1} 0.4389 = 23.70°$ with the x axis. The magnitude of the acceleration is $a = 9.81$ m/s^2 and is directed downward. From the figure, $\alpha = 23.70°$. Therefore,

$$a_t = a \sin \alpha = 9.81 \sin 23.70° = 3.94 \text{ m/s}^2 \qquad \textbf{Ans.}$$

$$a_n = a \cos \alpha = 9.81 \cos 23.70° = 8.98 \text{ m/s}^2 \qquad \textbf{Ans.}$$

© 2010 Pearson Education, Inc., Upper Saddle River, NJ. All rights reserved. This material is protected under all copyright laws as they currently exist. No portion of this material may be reproduced, in any form or by any means, without permission in writing from the publisher.

12–154. The motion of a particle is defined by the equations $x = (2t + t^2)$ m and $y = (t^2)$ m, where t is in seconds. Determine the normal and tangential components of the particle's velocity and acceleration when $t = 2$ s.

Velocity: Here, $\mathbf{r} = \left\{\left(2t + t^2\right)\mathbf{i} + t^2\mathbf{j}\right\}$ m. To determine the velocity $\mathbf{v}$, apply Eq. 12–7.

$$\mathbf{v} = \frac{d\mathbf{r}}{dt} = \{(2 + 2t)\,\mathbf{i} + 2t\mathbf{j}\}\ \text{m/s}$$

When $t = 2$ s, $\mathbf{v} = [2 + 2(2)]\mathbf{i} + 2(2)\mathbf{j} = \{6\mathbf{i} + 4\mathbf{j}\}$ m/s. Then $v = \sqrt{6^2 + 4^2} = 7.21$ m/s. Since the velocity is always directed tangent to the path,

$$v_n = 0 \qquad \text{and} \qquad v_t = 7.21\ \text{m/s} \qquad \textbf{Ans.}$$

The velocity $\mathbf{v}$ makes an angle $\theta = \tan^{-1}\dfrac{4}{6} = 33.69°$ with the x axis.

Acceleration: To determine the acceleration $\mathbf{a}$, apply Eq. 12–9.

$$\mathbf{a} = \frac{d\mathbf{v}}{dt} = \{2\mathbf{i} + 2\mathbf{j}\}\ \text{m/s}^2$$

Then

$$a = \sqrt{2^2 + 2^2} = 2.828\ \text{m/s}^2$$

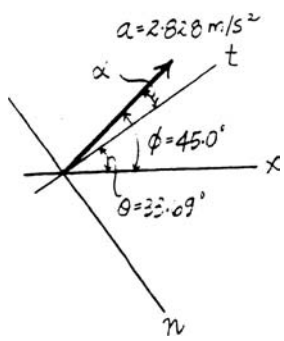

The acceleration $\mathbf{a}$ makes an angle $\phi = \tan^{-1}\dfrac{2}{2} = 45.0°$ with the x axis. From the figure, $\alpha = 45° - 33.69 = 11.31°$. Therefore,

$$a_n = a \sin\alpha = 2.828 \sin 11.31° = 0.555\ \text{m/s}^2 \qquad \textbf{Ans.}$$

$$a_t = a \cos\alpha = 2.828 \cos 11.31° = 2.77\ \text{m/s}^2 \qquad \textbf{Ans.}$$

© 2010 Pearson Education, Inc., Upper Saddle River, NJ. All rights reserved. This material is protected under all copyright laws as they currently exist. No portion of this material may be reproduced, in any form or by any means, without permission in writing from the publisher.

12–155. The motorcycle travels along the elliptical track at a constant speed v. Determine the greatest magnitude of the acceleration if $a > b$.

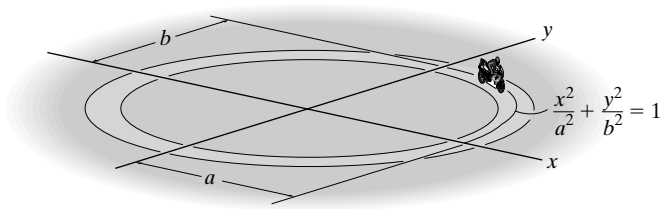

Acceleration: Differentiating twice the expression $y = \frac{b}{a}\sqrt{a^2 - x^2}$, we have

$$\frac{dy}{dx} = -\frac{bx}{a\sqrt{a^2 - x^2}}$$

$$\frac{d^2y}{dx^2} = -\frac{ab}{(a^2 - x^2)^{3/2}}$$

The radius of curvature of the path is

$$\rho = \frac{\left[1 + \left(\frac{dy}{dx}\right)^2\right]^{3/2}}{\left|\frac{d^2y}{dx^2}\right|} = \frac{\left[1 + \left(-\frac{bx}{a\sqrt{a^2 - x^2}}\right)^2\right]^{3/2}}{\left|-\frac{ab}{(a^2 - x^2)^{3/2}}\right|} = \frac{\left[1 + \frac{b^2x^2}{a^2(a^2 - x^2)}\right]^{3/2}}{\frac{ab}{(a^2 - x^2)^{3/2}}} \quad \textbf{[1]}$$

To have the maximum normal acceleration, the radius of curvature of the path must be a minimum. By observation, this happens when $y = 0$ and $x = a$. When $x \to a$, $\frac{b^2x^2}{a^2(a^2 - x^2)} >>> 1$. Then, $\left[1 + \frac{b^2x^2}{a^2(a^2 - x^2)}\right]^{3/2} \to \left[\frac{b^2x^2}{a^2(a^2 - x^2)}\right]^{3/2} = \frac{b^3x^3}{a^3(a^2 - x^2)^{3/2}}$.

Substituting this value into Eq. [1] yields $\rho = \frac{b^2}{a^4}x^3$. At $x = a$,

$$\rho = \frac{b^2}{a^4}\left(a^3\right) = \frac{b^2}{a}$$

To determine the normal acceleration, apply Eq. 12–20.

$$(a_n)_{\max} = \frac{v^2}{\rho} = \frac{v^2}{b^2/a} = \frac{a}{b^2}v^2$$

Since the motorcycle is traveling at a constant speed, $a_t = 0$. Thus,

$$a_{\max} = (a_n)_{\max} = \frac{a}{b^2}v^2 \qquad \textbf{Ans.}$$

© 2010 Pearson Education, Inc., Upper Saddle River, NJ. All rights reserved. This material is protected under all copyright laws as they currently exist. No portion of this material may be reproduced, in any form or by any means, without permission in writing from the publisher.

***12–156.** A particle moves along a circular path of radius 300 mm. If its angular velocity is $\dot{\theta} = (2t^2)$ rad/s, where t is in seconds, determine the magnitude of the particle's acceleration when $t = 2$ s.

Time Derivatives:

$$\dot{r} = \ddot{r} = 0$$

$$\dot{\theta} = 2t^2\big|_{t=2\text{ s}} = 8 \text{ rad/s} \qquad \ddot{\theta} = 4t\big|_{t=2\text{ s}} = 8 \text{ rad/s}^2$$

Velocity: The radial and transverse components of the particle's velocity are

$$v_r = \dot{r} = 0 \qquad v_\theta = r\dot{\theta} = 0.3(8) = 2.4 \text{ m/s}$$

Thus, the magnitude of the particle's velocity is

$$v = \sqrt{{v_r}^2 + {v_\theta}^2} = \sqrt{0^2 + 2.4^2} = 2.4 \text{ m/s} \qquad \textbf{Ans.}$$

Acceleration:

$$a_r = \ddot{r} - r\dot{\theta}^2 = 0 - 0.3\left(8^2\right) = -19.2 \text{ m/s}^2$$

$$a_\theta = r\ddot{\theta} + 2\dot{r}\dot{\theta} = 0.3(8) + 0 = 2.4 \text{ m/s}^2$$

Thus, the magnitude of the particle's acceleration is

$$a = \sqrt{{a_r}^2 + {a_\theta}^2} = \sqrt{(-19.2)^2 + 2.4^2} = 19.3 \text{ m/s}^2 \qquad \textbf{Ans.}$$

© 2010 Pearson Education, Inc., Upper Saddle River, NJ. All rights reserved. This material is protected under all copyright laws as they currently exist. No portion of this material may be reproduced, in any form or by any means, without permission in writing from the publisher.

•12–157. A particle moves along a circular path of radius 300 mm. If its angular velocity is $\dot{\theta} = (3t^2)$ rad/s, where t is in seconds, determine the magnitudes of the particle's velocity and acceleration when $\theta = 45°$. The particle starts from rest when $\theta = 0°$.

Time Derivatives: Using the initial condition $\theta = 0°$ when $t = 0$ s,

$$d\theta = 3t^2 dt$$

$$\int_0^\theta d\theta = \int_0^t 3t^2\, dt$$

$$\theta = \left(t^3\right) \text{ rad}$$

At $\theta = 45° = \dfrac{\pi}{4}$ rad,

$$\frac{\pi}{4} = t^3 \qquad t = 0.9226 \text{ s}$$

$$\dot{r} = \ddot{r} = 0$$

$$\dot{\theta} = 3t^2\big|_{t=0.9226\text{ s}} = 2.554 \text{ rad/s} \qquad \ddot{\theta} = 6t\big|_{t=0.9226\text{ s}} = 5.536 \text{ rad/s}^2$$

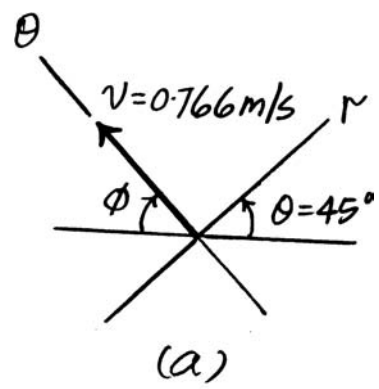

(a)

Velocity:

$$v_r = \dot{r} = 0 \qquad v_\theta = r\dot{\theta} = 0.3(2.554) = 0.7661 \text{ m/s}$$

Thus, the magnitude of the particle's velocity is

$$v = \sqrt{{v_r}^2 + {v_\theta}^2} = \sqrt{0^2 + 0.7661^2} = 0.766 \text{ m/s} \qquad \textbf{Ans.}$$

Acceleration:

$$a_r = \ddot{r} - r\dot{\theta}^2 = 0 - 0.3\left(2.554^2\right) = -1.957 \text{ m/s}^2$$

$$a_\theta = r\ddot{\theta} + 2\dot{r}\dot{\theta} = 0.3(5.536) + 0 = 1.661 \text{ m/s}^2$$

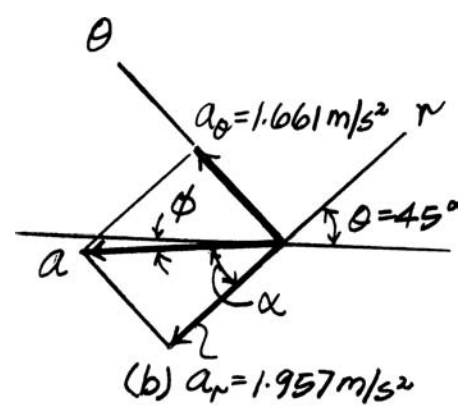

Thus, the magnitude of the particle's acceleration is

$$a = \sqrt{{a_r}^2 + {a_\theta}^2} = \sqrt{(-1.957)^2 + 1.661^2} = 2.57 \text{ m/s}^2 \qquad \textbf{Ans.}$$

© 2010 Pearson Education, Inc., Upper Saddle River, NJ. All rights reserved. This material is protected under all copyright laws as they currently exist. No portion of this material may be reproduced, in any form or by any means, without permission in writing from the publisher.

12–158. A particle moves along a circular path of radius 5 ft. If its position is $\theta = (e^{0.5t})$ rad, where t is in seconds, determine the magnitude of the particle's acceleration when $\theta = 90°$.

Time Derivative: At $\theta = 90° = \frac{\pi}{2}$ rad,

$$\frac{\pi}{2} = e^{0.5t} \qquad t = 0.9032 \text{ s}$$

Using the result of t, the value of the first and second time derivative of r and θ are

$$\dot{r} = \ddot{r} = 0$$

$$\dot{\theta} = 0.5e^{0.5t}\big|_{t=0.9032\text{ s}} = 0.7854 \text{ rad/s}$$

$$\ddot{\theta} = 0.25e^{0.5t}\big|_{t=0.9032\text{ s}} = 0.3927 \text{ rad/s}^2$$

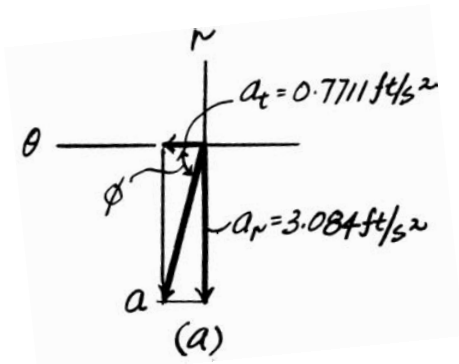

(a)

Acceleration:

$$a_r = \ddot{r} - r\dot{\theta}^2 = 0 - 5\left(0.7854^2\right) = -3.084 \text{ ft/s}^2$$

$$a_\theta = r\ddot{\theta} + 2\dot{r}\dot{\theta} = 5(0.3927) + 0 = 1.963 \text{ ft/s}^2$$

Thus, the magnitude of the particle's acceleration is

$$a = \sqrt{a_r{}^2 + a_\theta{}^2} = \sqrt{(-3.084)^2 + 1.963^2} = 3.66 \text{ ft/s}^2 \qquad \textbf{Ans.}$$

© 2010 Pearson Education, Inc., Upper Saddle River, NJ. All rights reserved. This material is protected under all copyright laws as they currently exist. No portion of this material may be reproduced, in any form or by any means, without permission in writing from the publisher.

12–159. The position of a particle is described by $r = (t^3 + 4t - 4)\,\text{mm}$ and $\theta = (t^{3/2})\,\text{rad}$, where t is in seconds. Determine the magnitudes of the particle's velocity and acceleration at the instant $t = 2$ s.

Time Derivatives: The first and second time derivative of r and θ when $t = 2$ s are

$$r = t^3 + 4t - 4\Big|_{t=2\,\text{s}} = 12\ \text{m} \qquad \theta = t^{3/2}$$

$$\dot{r} = 3t^2 + 4\Big|_{t=2\,\text{s}} = 16\ \text{m/s} \qquad \dot{\theta} = \frac{3}{2}t^{1/2}\Big|_{t=2\,\text{s}} = 2.121\ \text{rad/s}$$

$$\ddot{r} = 6t\Big|_{t=2\,\text{s}} = 12\ \text{m/s}^2 \qquad \ddot{\theta} = \frac{3}{4}t^{-1/2}\Big|_{t=2\,\text{s}} = 0.5303\ \text{rad/s}^2$$

Velocity:

$$v_r = \dot{r} = 16\ \text{m/s} \qquad v_\theta = r\dot{\theta} = 12(2.121) = 25.46\ \text{m/s}$$

Thus, the magnitude of the particle's velocity is

$$v = \sqrt{{v_r}^2 + {v_\theta}^2} = \sqrt{16^2 + 25.46^2} = 30.1\ \text{m/s} \qquad \textbf{Ans.}$$

Acceleration:

$$a_r = \ddot{r} - r\dot{\theta}^2 = 12 - 12\left(2.121^2\right) = -42.0\ \text{m/s}^2$$

$$a_\theta = r\ddot{\theta} + 2\dot{r}\dot{\theta} = 12(0.5303) + 2(16)(2.121) = 74.25\ \text{m/s}^2$$

Thus, the magnitude of the particle's acceleration is

$$a = \sqrt{{a_r}^2 + {a_\theta}^2} = \sqrt{(-42.0)^2 + 74.25^2} = 85.3\ \text{m/s}^2 \qquad \textbf{Ans.}$$

© 2010 Pearson Education, Inc., Upper Saddle River, NJ. All rights reserved. This material is protected under all copyright laws as they currently exist. No portion of this material may be reproduced, in any form or by any means, without permission in writing from the publisher.

***12–160.** The position of a particle is described by $r = (300e^{-0.5t})$ mm and $\theta = (0.3t^2)$ rad, where t is in seconds. Determine the magnitudes of the particle's velocity and acceleration at the instant $t = 1.5$ s.

Time Derivatives: The first and second time derivative of r and θ when $t = 1.5$ s are

$$r = 300e^{-0.5t}\Big|_{t=1.5\text{ s}} = 141.77\text{ mm} \qquad \theta = 0.3t^2\text{ rad}$$

$$\dot{r} = -150e^{-0.5t}\Big|_{t=1.5\text{ s}} = -70.85\text{ mm/s} \qquad \dot{\theta} = 0.6t\Big|_{t=1.5\text{ s}} = 0.9\text{ rad/s}$$

$$\ddot{r} = 75e^{-0.5t}\Big|_{t=1.5\text{ s}} = 35.43\text{ mm/s}^2 \qquad \ddot{\theta} = 0.6\text{ rad/s}^2$$

Velocity:

$$v_r = \dot{r} = -70.85\text{ mm/s} \qquad v_\theta = r\dot{\theta} = 141.71(0.9) = 127.54\text{ mm/s}$$

Thus, the magnitude of the particle's velocity is

$$v = \sqrt{v_r{}^2 + v_\theta{}^2} = \sqrt{(-70.85)^2 + 127.54^2} = 146\text{ mm/s} \qquad \textbf{Ans.}$$

Acceleration:

$$a_r = \ddot{r} - r\dot{\theta}^2 = 35.43 - 141.71\left(0.9^2\right) = -79.36\text{ mm/s}^2$$

$$a_\theta = r\ddot{\theta} + 2\dot{r}\dot{\theta} = 141.71(0.6) + 2(-70.85)(0.9) = -42.51\text{ mm/s}^2$$

Thus, the magnitude of the particle's acceleration is

$$a = \sqrt{a_r{}^2 + a_\theta{}^2} = \sqrt{(-79.36)^2 + (-42.51)^2} = 90.0\text{ mm/s}^2 \qquad \textbf{Ans.}$$

•12–161. An airplane is flying in a straight line with a velocity of 200 mi/h and an acceleration of 3 mi/h^2. If the propeller has a diameter of 6 ft and is rotating at an angular rate of 120 rad/s, determine the magnitudes of velocity and acceleration of a particle located on the tip of the propeller.

$$v_{Pl} = \left(\frac{200\text{ mi}}{\text{h}}\right)\left(\frac{5280\text{ ft}}{1\text{ mi}}\right)\left(\frac{1\text{ h}}{3600\text{ s}}\right) = 293.3\text{ ft/s}$$

$$a_{Pl} = \left(\frac{3\text{ mi}}{\text{h}^2}\right)\left(\frac{5280\text{ ft}}{1\text{ mi}}\right)\left(\frac{1\text{ h}}{3600\text{ s}}\right)^2 = 0.001\,22\text{ ft/s}^2$$

$$v_{Pr} = 120(3) = 360\text{ ft/s}$$

$$v = \sqrt{v_{Pl}^2 + v_{Pr}^2} = \sqrt{(293.3)^2 + (360)^2} = 464\text{ ft/s} \qquad \textbf{Ans.}$$

$$a_{Pr} = \frac{v_{Pr}^2}{\rho} = \frac{(360)^2}{3} = 43\,200\text{ ft/s}^2$$

$$a = \sqrt{a_{Pl}^2 + a_{Pr}^2} = \sqrt{(0.001\,22)^2 + (43\,200)^2} = 43.2(10^3)\text{ ft/s}^2 \qquad \textbf{Ans.}$$

© 2010 Pearson Education, Inc., Upper Saddle River, NJ. All rights reserved. This material is protected under all copyright laws as they currently exist. No portion of this material may be reproduced, in any form or by any means, without permission in writing from the publisher.

12–162. A particle moves along a circular path having a radius of 4 in. such that its position as a function of time is given by $\theta = (\cos 2t)$ rad, where t is in seconds. Determine the magnitude of the acceleration of the particle when $\theta = 30°$.

When $\theta = \frac{\pi}{6}$ rad, $\quad \frac{\pi}{6} = \cos 2t \quad t = 0.5099$ s

$$\dot{\theta} = \frac{d\theta}{dt} = -2\sin 2t\Big|_{t=0.5099\text{ s}} = -1.7039 \text{ rad/s}$$

$$\ddot{\theta} = \frac{d^2\theta}{dt^2} = -4\cos 2t\Big|_{t=0.5099\text{ s}} = -2.0944 \text{ rad/s}^2$$

$r = 4 \qquad \dot{r} = 0 \qquad \ddot{r} = 0$

$$a_r = \ddot{r} - r\dot{\theta}^2 = 0 - 4(-1.7039)^2 = -11.6135 \text{ in./s}^2$$

$$a_\theta = r\ddot{\theta} + 2\dot{r}\dot{\theta} = 4(-2.0944) + 0 = -8.3776 \text{ in./s}^2$$

$$a = \sqrt{a_r^2 + a_\theta^2} = \sqrt{(-11.6135)^2 + (-8.3776)^2} = 14.3 \text{ in./s}^2 \qquad \textbf{Ans.}$$

12–163. A particle travels around a limaçon, defined by the equation $r = b - a\cos\theta$, where a and b are constants. Determine the particle's radial and transverse components of velocity and acceleration as a function of θ and its time derivatives.

$$r = b - a\cos\theta$$

$$\dot{r} = a\sin\theta\dot{\theta}$$

$$\dot{r} = a\cos\theta\dot{\theta}^2 + a\sin\theta\ddot{\theta}$$

$$v_r = \dot{r} = a\sin\theta\dot{\theta} \qquad \textbf{Ans.}$$

$$v_\theta = r\theta = (b - a\cos\theta)\dot{\theta} \qquad \textbf{Ans.}$$

$$a_r = \ddot{r} - r\dot{\theta}^2 = a\cos\theta\dot{\theta}^2 + a\sin\theta\ddot{\theta} - (b - a\cos\theta)\dot{\theta}^2$$

$$= (2a\cos\theta - b)\,\dot{\theta}^2 + a\sin\theta\ddot{\theta} \qquad \textbf{Ans.}$$

$$a_\theta = r\ddot{\theta} + 2\dot{r}\dot{\theta} = (b - a\cos\theta)\ddot{\theta} + 2\left(a\sin\theta\dot{\theta}\right)\dot{\theta}$$

$$= (b - a\cos\theta)\ddot{\theta} + 2a\dot{\theta}^2\sin\theta \qquad \textbf{Ans.}$$

© 2010 Pearson Education, Inc., Upper Saddle River, NJ. All rights reserved. This material is protected under all copyright laws as they currently exist. No portion of this material may be reproduced, in any form or by any means, without permission in writing from the publisher.

***12–164.** A particle travels around a lituus, defined by the equation $r^2\theta = a^2$, where a is a constant. Determine the particle's radial and transverse components of velocity and acceleration as a function of θ and its time derivatives.

$$r^2\theta = a^2$$

$$r = a\theta^{-\frac{1}{2}}$$

$$r = a\left(-\frac{1}{2}\right)\theta^{-\frac{3}{2}}\dot{\theta}.$$

$$\ddot{r} = -\frac{1}{2}a\left(-\frac{3}{2}\theta^{-\frac{3}{2}}\dot{\theta}^2 + \theta^{-\frac{3}{2}}\ddot{\theta}\right)$$

$$v_r = \dot{r} = -\frac{1}{2}a\theta^{-\frac{3}{2}}\dot{\theta} \qquad \textbf{Ans.}$$

$$v_\theta = r\dot{\theta} = a\theta^{-\frac{1}{2}}\dot{\theta} \qquad \textbf{Ans.}$$

$$a_r = \ddot{r} - r\dot{\theta}^2 = -\frac{1}{2}a\left(-\frac{3}{2}\theta^{-\frac{3}{2}}\dot{\theta}^2 + \theta^{-\frac{3}{2}}\ddot{\theta}\right) - a\theta^{-\frac{1}{2}}\dot{\theta}^2$$

$$= a\left[\left(\frac{3}{4}\theta^{-2} - 1\right)\theta^{-\frac{1}{2}}\dot{\theta}^2 - \frac{1}{2}\theta^{-\frac{3}{2}}\ddot{\theta}\right] \qquad \textbf{Ans.}$$

$$a_\theta = r\ddot{\theta} + 2r\dot{\theta} = a\theta^{-\frac{1}{2}}\ddot{\theta} + 2(a)\left(-\frac{1}{2}\right)\theta^{-\frac{3}{2}}\dot{\theta}\left(\dot{\theta}\right) = a\left[\ddot{\theta} - \frac{\dot{\theta}^2}{\theta}\right]\theta^{-\frac{1}{2}} \qquad \textbf{Ans.}$$

•12–165. A car travels along the circular curve of radius $r = 300$ ft. At the instant shown, its angular rate of rotation is $\dot{\theta} = 0.4$ rad/s, which is increasing at the rate of $\ddot{\theta} = 0.2$ rad/s^2. Determine the magnitudes of the car's velocity and acceleration at this instant.

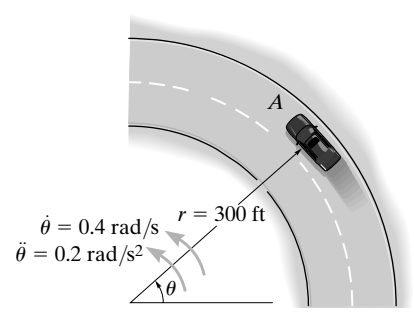

Velocity: Applying Eq. 12–25, we have

$$v_r = \dot{r} = 0 \qquad v_\theta = r\dot{\theta} = 300(0.4) = 120 \text{ ft/s}$$

Thus, the magnitude of the velocity of the car is

$$v = \sqrt{v_r^2 + v_\theta^2} = \sqrt{0^2 + 120^2} = 120 \text{ ft/s} \qquad \textbf{Ans.}$$

Acceleration: Applying Eq. 12–29, we have

$$a_r = \ddot{r} - r\dot{\theta}^2 = 0 - 300\left(0.4^2\right) = -48.0 \text{ ft/s}^2$$

$$a_\theta = r\ddot{\theta} + 2\dot{r}\dot{\theta} = 300(0.2) + 2(0)(0.4) = 60.0 \text{ ft/s}^2$$

Thus, the magnitude of the acceleration of the car is

$$a = \sqrt{a_r^2 + a_\theta^2} = \sqrt{(-48.0)^2 + 60.0^2} = 76.8 \text{ ft/s}^2 \qquad \textbf{Ans.}$$

© 2010 Pearson Education, Inc., Upper Saddle River, NJ. All rights reserved. This material is protected under all copyright laws as they currently exist. No portion of this material may be reproduced, in any form or by any means, without permission in writing from the publisher.

12–166. The slotted arm OA rotates counterclockwise about O with a constant angular velocity of $\dot{\theta}$. The motion of pin B is constrained such that it moves on the fixed circular surface and along the slot in OA. Determine the magnitudes of the velocity and acceleration of pin B as a function of θ.

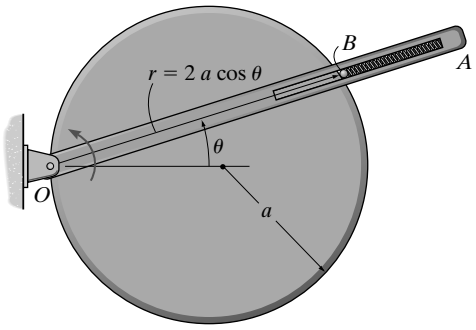

Time Derivatives:

$$r = 2a\cos\theta$$

$$\dot{r} = -2a\sin\theta\dot{\theta}$$

$$\ddot{r} = -2a\left[\cos\theta\dot{\theta}\dot{\theta} + \sin\theta\ddot{\theta}\right] = -2a\left[\cos\theta\dot{\theta}^2 + \sin\theta\ddot{\theta}\right]$$

Since $\dot{\theta}$ is constant, $\ddot{\theta} = 0$. Thus,

$$\ddot{r} = -2a\cos\theta\dot{\theta}^2$$

Velocity:

$$v_r = \dot{r} = -2a\sin\theta\dot{\theta} \qquad v_\theta = r\dot{\theta} = 2a\cos\theta\dot{\theta}$$

Thus, the magnitude of the pin's velocity is

$$v = \sqrt{{v_r}^2 + {v_\theta}^2} = \sqrt{\left(-2a\sin\theta\dot{\theta}\right)^2 + \left(2a\cos\theta\dot{\theta}\right)^2}$$

$$= \sqrt{4a^2\dot{\theta}^2\left(\sin^2\theta + \cos^2\theta\right)} = 2a\dot{\theta} \qquad \textbf{Ans.}$$

Acceleration:

$$a_r = \ddot{r} - r\dot{\theta}^2 = -2a\cos\theta\dot{\theta}^2 - 2a\cos\theta\dot{\theta}^2 = -4a\cos\theta\dot{\theta}^2$$

$$a_\theta = r\ddot{\theta} + 2\dot{r}\dot{\theta} = 0 + 2\left(-2a\sin\theta\dot{\theta}\right)\dot{\theta} = -4a\sin\theta\dot{\theta}^2$$

Thus, the magnitude of the pin's acceleration is

$$a = \sqrt{{a_r}^2 + {a_\theta}^2} = \sqrt{\left(-4a\cos\theta\dot{\theta}^2\right)^2 + \left(-4a\sin\theta\dot{\theta}^2\right)^2}$$

$$= \sqrt{16a^2\dot{\theta}^4\left(\cos^2\theta + \sin^2\theta\right)} = 4a\dot{\theta}^2 \qquad \textbf{Ans.}$$

© 2010 Pearson Education, Inc., Upper Saddle River, NJ. All rights reserved. This material is protected under all copyright laws as they currently exist. No portion of this material may be reproduced, in any form or by any means, without permission in writing from the publisher.

12–167. The slotted arm OA rotates counterclockwise about O such that when $\theta = \pi/4$, arm OA is rotating with an angular velocity of $\dot{\theta}$ and an angular acceleration of $\ddot{\theta}$. Determine the magnitudes of the velocity and acceleration of pin B at this instant. The motion of pin B is constrained such that it moves on the fixed circular surface and along the slot in OA.

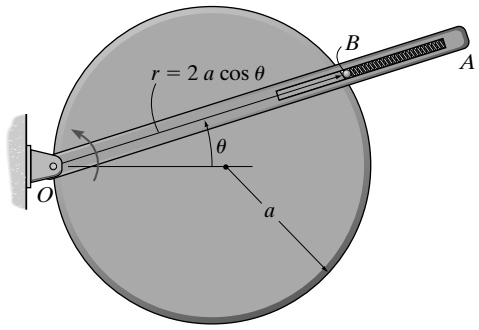

Time Derivatives:

$$r = 2a\cos\theta$$

$$\dot{r} = -2a\sin\theta\dot{\theta}$$

$$\ddot{r} = -2a\left[\cos\theta\dot{\theta}\dot{\theta} + \sin\theta\ddot{\theta}\right] = -2a\left[\cos\theta\dot{\theta}^2 + \sin\theta\ddot{\theta}\right]$$

When $\theta = \dfrac{\pi}{4}$ rad,

$$r\big|_{\theta = \frac{\pi}{4}} = 2a\left(\frac{1}{\sqrt{2}}\right) = \sqrt{2}a$$

$$\dot{r}\big|_{\theta = \frac{\pi}{4}} = -2a\left(\frac{1}{\sqrt{2}}\right)\dot{\theta} = -\sqrt{2}a\dot{\theta}$$

$$\ddot{r}\big|_{\theta = \frac{\pi}{4}} = -2a\left(\frac{1}{\sqrt{2}}\dot{\theta}^2 + \frac{1}{\sqrt{2}}\ddot{\theta}\right) = -\sqrt{2}a\left(\dot{\theta}^2 + \ddot{\theta}\right)$$

Velocity:

$$v_r = \dot{r} = -\sqrt{2}a\dot{\theta} \qquad\qquad v_\theta = r\dot{\theta} = \sqrt{2}a\dot{\theta}$$

Thus, the magnitude of the pin's velocity is

$$v = \sqrt{{v_r}^2 + {v_\theta}^2} = \sqrt{\left(-\sqrt{2}a\dot{\theta}\right)^2 + \left(\sqrt{2}a\dot{\theta}\right)^2} = 2a\dot{\theta} \qquad \textbf{Ans.}$$

Acceleration:

$$a_r = \ddot{r} - r\dot{\theta}^2 = -\sqrt{2}a\left(\dot{\theta}^2 + \ddot{\theta}\right) - \sqrt{2}a\dot{\theta}^2 = -\sqrt{2}a\left(2\dot{\theta}^2 + \ddot{\theta}\right)$$

$$a_\theta = r\ddot{\theta} + 2\dot{r}\dot{\theta} = \sqrt{2}a\ddot{\theta} + 2\left(-\sqrt{2}a\dot{\theta}\right)\left(\dot{\theta}\right) = \sqrt{2}a\left(\ddot{\theta} - 2\dot{\theta}^2\right)$$

Thus, the magnitude of the pin's acceleration is

$$a = \sqrt{{a_r}^2 + {a_\theta}^2} = \sqrt{\left[-\sqrt{2}a\left(2\dot{\theta}^2 + \ddot{\theta}\right)\right]^2 + \left[\sqrt{2}a\left(\ddot{\theta} - 2\dot{\theta}^2\right)\right]^2}$$

$$= 2a\sqrt{4\dot{\theta}^4 + \ddot{\theta}^2} \qquad \textbf{Ans.}$$

© 2010 Pearson Education, Inc., Upper Saddle River, NJ. All rights reserved. This material is protected under all copyright laws as they currently exist. No portion of this material may be reproduced, in any form or by any means, without permission in writing from the publisher.

***12–168.** The car travels along the circular curve having a radius $r = 400$ ft. At the instant shown, its angular rate of rotation is $\dot{\theta} = 0.025$ rad/s, which is decreasing at the rate $\ddot{\theta} = -0.008$ rad/s^2. Determine the radial and transverse components of the car's velocity and acceleration at this instant and sketch these components on the curve.

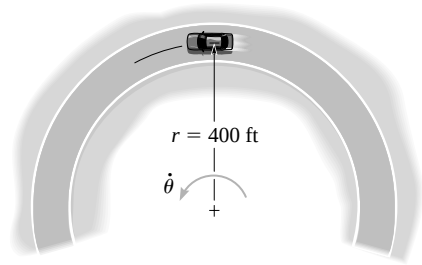

$r = 400 \qquad \dot{r} = 0 \qquad \ddot{r} = 0$

$\dot{\theta} = 0.025 \qquad \theta = -0.008$

$v_r = \dot{r} = 0$ **Ans.**

$v_\theta = r\dot{\theta} = 400(0.025) = 10 \text{ ft/s}$ **Ans.**

$a_r = r - r\dot{\theta}^2 = 0 - 400(0.025)^2 = -0.25 \text{ ft/s}^2$ **Ans.**

$a_\theta = r\theta + 2\dot{r}\theta = 400(-0.008) + 0 = -3.20 \text{ ft/s}^2$ **Ans.**

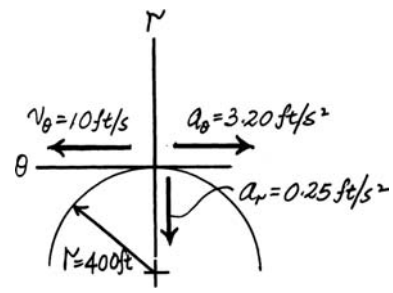

•12–169. The car travels along the circular curve of radius $r = 400$ ft with a constant speed of $v = 30$ ft/s. Determine the angular rate of rotation $\dot{\theta}$ of the radial line r and the magnitude of the car's acceleration.

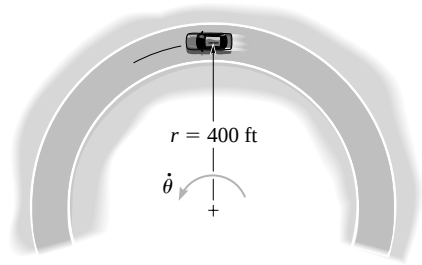

$r = 400 \text{ ft} \qquad \dot{r} = 0 \qquad \ddot{r} = 0$

$v_r = r = 0 \qquad v_\theta = r\theta = 400\left(\theta\right)$

$v = \sqrt{(0)^2 + \left(400\,\dot{\theta}\right)^2} = 30$

$\theta = 0.075 \text{ rad/s}$ **Ans.**

$\ddot{\theta} = 0$

$a_r = \ddot{r} - r\dot{\theta}^2 = 0 - 400(0.075)^2 = -2.25 \text{ ft/s}^2$

$a_\theta = r\theta + 2\dot{r}\theta = 400(0) + 2(0)(0.075) = 0$

$a = \sqrt{(-2.25)^2 + (0)^2} = 2.25 \text{ ft/s}^2$ **Ans.**

© 2010 Pearson Education, Inc., Upper Saddle River, NJ. All rights reserved. This material is protected under all copyright laws as they currently exist. No portion of this material may be reproduced, in any form or by any means, without permission in writing from the publisher.

12–170. Starting from rest, the boy runs outward in the radial direction from the center of the platform with a constant acceleration of 0.5 m/s^2. If the platform is rotating at a constant rate $\dot{\theta} = 0.2$ rad/s, determine the radial and transverse components of the velocity and acceleration of the boy when $t = 3$ s. Neglect his size.

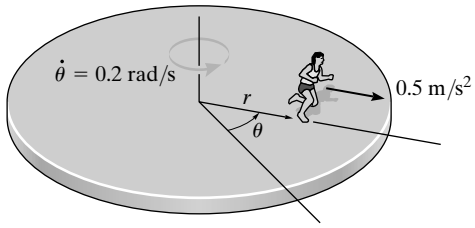

Velocity: When $t = 3$ s, the position of the boy is given by

$$s = (s_0)_r + (v_0)_r t + \frac{1}{2}(a_c)_r t^2$$

$$r = 0 + 0 + \frac{1}{2}(0.5)\left(3^2\right) = 2.25 \text{ m}$$

The boy's radial component of velocity is given by

$$v_r = (v_0)_r + (a_c)_r t$$

$$= 0 + 0.5(3) = 1.50 \text{ m/s} \qquad \textbf{Ans.}$$

The boy's transverse component of velocity is given by

$$v_\theta = r\dot{\theta} = 2.25(0.2) = 0.450 \text{ m/s} \qquad \textbf{Ans.}$$

Acceleration: When $t = 3$ s, $r = 2.25$ m, $\dot{r} = v_r = 1.50$ m/s, $\ddot{r} = 0.5$ m/s^2, $\ddot{\theta} = 0$. Applying Eq. 12–29, we have

$$a_r = \ddot{r} - r\dot{\theta}^2 = 0.5 - 2.25\left(0.2^2\right) = 0.410 \text{ m/s}^2 \qquad \textbf{Ans.}$$

$$a_\theta = r\ddot{\theta} + 2r\dot{\theta} = 2.25(0) + 2(1.50)(0.2) = 0.600 \text{ m/s}^2 \qquad \textbf{Ans.}$$

12–171. The small washer slides down the cord OA. When it is at the midpoint, its speed is 200 mm/s and its acceleration is 10 mm/s^2. Express the velocity and acceleration of the washer at this point in terms of its cylindrical components.

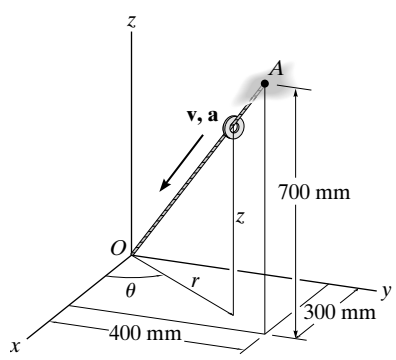

$$OA = \sqrt{(400)^2 + (300)^2 + (700)^2} = 860.23 \text{ mm}$$

$$OB = \sqrt{(400)^2 + (300)^2} = 500 \text{ mm}$$

$$v_r = (200)\left(\frac{500}{860.23}\right) = 116 \text{ mm/s}$$

$$v_\theta = 0$$

$$v_z = (200)\left(\frac{700}{860.23}\right) = 163 \text{ mm/s}$$

Thus, $\mathbf{v} = \{-116\mathbf{u}_r - 163\mathbf{u}_z\}$ mm/s **Ans.**

$$a_r = 10\left(\frac{500}{860.23}\right) = 5.81$$

$$a_\theta = 0$$

$$a_z = 10\left(\frac{700}{860.23}\right) = 8.14$$

Thus, $\mathbf{a} = \{-5.81\mathbf{u}_r - 8.14\mathbf{u}_z\}$ mm/s^2 **Ans.**

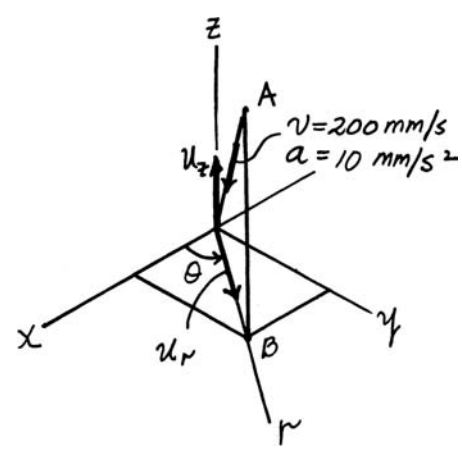

© 2010 Pearson Education, Inc., Upper Saddle River, NJ. All rights reserved. This material is protected under all copyright laws as they currently exist. No portion of this material may be reproduced, in any form or by any means, without permission in writing from the publisher.

***12–172.** If arm OA rotates counterclockwise with a constant angular velocity of $\dot{\theta} = 2$ rad/s, determine the magnitudes of the velocity and acceleration of peg P at $\theta = 30°$. The peg moves in the fixed groove defined by the lemniscate, and along the slot in the arm.

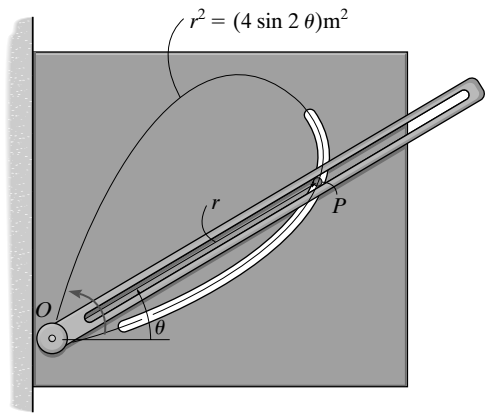

Time Derivatives:

$$r^2 = 4 \sin 2\theta$$

$$2r\dot{r} = 8 \cos 2\theta\dot{\theta}$$

$$\dot{r} = \left[\frac{4 \cos 2\theta\dot{\theta}}{r}\right] \text{m/s} \qquad \dot{\theta} = 2 \text{ rad/s}$$

$$2\left(r\ddot{r} + \dot{r}^2\right) = 8\left(-2 \sin 2\theta\dot{\theta}^2 + \cos 2\theta\ddot{\theta}\right)$$

$$\ddot{r} = \left[\frac{4\left(\cos 2\theta\ddot{\theta} - 2 \sin 2\theta\dot{\theta}^2\right) - \dot{r}^2}{r}\right] \text{m/s}^2 \qquad \ddot{\theta} = 0$$

At $\theta = 30°$,

$$r\big|_{\theta=30°} = \sqrt{4 \sin 60°} = 1.861 \text{ m}$$

$$\dot{r}\big|_{\theta=30°} = \frac{(4 \cos 60°)(2)}{1.861} = 2.149 \text{ m/s}$$

$$\ddot{r}\big|_{\theta=30°} = \frac{4\left[0 - 2 \sin 60°\left(2^2\right)\right] - (2.149)^2}{1.861} = -17.37 \text{ m/s}^2$$

Velocity:

$$v_r = \dot{r} = 2.149 \text{ m/s} \qquad v_\theta = r\dot{\theta} = 1.861(2) = 3.722 \text{ m/s}$$

Thus, the magnitude of the peg's velocity is

$$v = \sqrt{{v_r}^2 + {v_\theta}^2} = \sqrt{2.149^2 + 3.722^2} = 4.30 \text{ m/s} \qquad \textbf{Ans.}$$

Acceleration:

$$a_r = \ddot{r} - r\dot{\theta}^2 = -17.37 - 1.861\left(2^2\right) = -24.82 \text{ m/s}^2$$

$$a_\theta = r\ddot{\theta} + 2\dot{r}\dot{\theta} = 0 + 2(2.149)(2) = 8.597 \text{ m/s}^2$$

Thus, the magnitude of the peg's acceleration is

$$a = \sqrt{{a_r}^2 + {a_\theta}^2} = \sqrt{(-24.82)^2 + 8.597^2} = 26.3 \text{ m/s}^2 \qquad \textbf{Ans.}$$

© 2010 Pearson Education, Inc., Upper Saddle River, NJ. All rights reserved. This material is protected under all copyright laws as they currently exist. No portion of this material may be reproduced, in any form or by any means, without permission in writing from the publisher.

•12–173. The peg moves in the curved slot defined by the lemniscate, and through the slot in the arm. At $\theta = 30°$, the angular velocity is $\dot{\theta} = 2$ rad/s, and the angular acceleration is $\ddot{\theta} = 1.5$ rad/s^2. Determine the magnitudes of the velocity and acceleration of peg P at this instant.

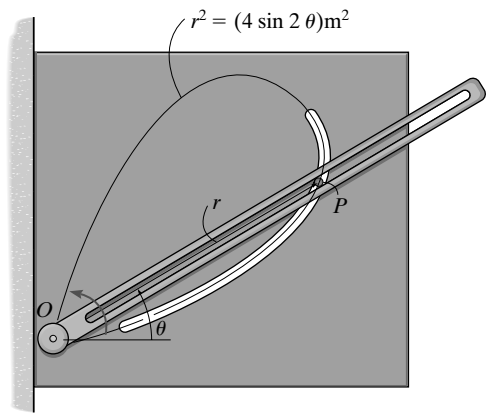

Time Derivatives:

$$2r\dot{r} = 8 \cos 2\theta\dot{\theta}$$

$$\dot{r} = \left(\frac{4 \cos 2\theta\dot{\theta}}{r}\right) \text{m/s} \qquad \dot{\theta} = 2 \text{ rad/s}$$

$$2\left(r\ddot{r} + \dot{r}^2\right) = 8\left(-2 \sin 2\theta\ddot{\theta} + \cos 2\theta\dot{\theta}^2\right)$$

$$\ddot{r} = \left[\frac{4\left(\cos 2\theta\ddot{\theta} - 2 \sin 2\theta\dot{\theta}^2\right) - \dot{r}^2}{r}\right] \text{m/s}^2 \qquad \ddot{\theta} = 1.5 \text{ rad/s}^2$$

At $\theta = 30°$,

$$r\big|_{\theta=30°} = \sqrt{4 \sin 60°} = 1.861 \text{ m}$$

$$\dot{r}\big|_{\theta=30°} = \frac{(4 \cos 60°)(2)}{1.861} = 2.149 \text{ m/s}$$

$$\ddot{r}\big|_{\theta=30°} = \frac{4\left[\cos 60°(1.5) - 2 \sin 60°\left(2^2\right)\right] - (2.149)^2}{1.861} = -15.76 \text{ m/s}^2$$

Velocity:

$$v_r = \dot{r} = 2.149 \text{ m/s} \qquad v_\theta = r\dot{\theta} = 1.861(2) = 3.722 \text{ m/s}$$

Thus, the magnitude of the peg's velocity is

$$v = \sqrt{a_r{}^2 + a_\theta{}^2} = \sqrt{2.149^2 + 3.722^2} = 4.30 \text{ m/s} \qquad \textbf{Ans.}$$

Acceleration:

$$a_r = \ddot{r} - r\dot{\theta}^2 = -15.76 - 1.861\left(2^2\right) = -23.20 \text{ m/s}^2$$

$$a_\theta = r\ddot{\theta} + 2\dot{r}\dot{\theta} = 1.861(1.5) + 2(2.149)(2) = 11.39 \text{ m/s}^2$$

Thus, the magnitude of the peg's acceleration is

$$a = \sqrt{a_r{}^2 + a_\theta{}^2} = \sqrt{(-23.20)^2 + 11.39^2} = 25.8 \text{ m/s}^2 \qquad \textbf{Ans.}$$

© 2010 Pearson Education, Inc., Upper Saddle River, NJ. All rights reserved. This material is protected under all copyright laws as they currently exist. No portion of this material may be reproduced, in any form or by any means, without permission in writing from the publisher.

12–174. The airplane on the amusement park ride moves along a path defined by the equations $r = 4$ m, $\theta = (0.2t)$ rad, and $z = (0.5 \cos \theta)$ m, where t is in seconds. Determine the cylindrical components of the velocity and acceleration of the airplane when $t = 6$ s.

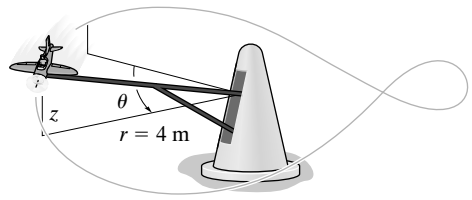

$r = 4$ m $\qquad \theta = 0.2t\big|_{t=6\text{ s}} = 1.2$ rad

$\dot{r} = 0 \qquad \dot{\theta} = 0.2$ rad/s

$\ddot{r} = 0 \qquad \ddot{\theta} = 0$

$z = 0.5 \cos \theta \qquad \dot{z} = -0.5 \sin \theta \dot{\theta}\big|_{\theta=1.2\text{ rad}} = -0.0932$ m/s

$\ddot{z} = -0.5\left[\cos \theta \dot{\theta}^2 + \sin \theta \ddot{\theta}\right]\big|_{\theta=1.2\text{ rad}} = -0.007247$ m/s^2

$v_r = \dot{r} = 0$ **Ans.**

$v_\theta = r\dot{\theta} = 4(0.2) = 0.8$ m/s **Ans.**

$v_z = \dot{z} = -0.0932$ m/s **Ans.**

$a_r = \ddot{r} - r\dot{\theta}^2 = 0 - 4(0.2)^2 = -0.16$ m/s^2 **Ans.**

$a_\theta = r\ddot{\theta} + 2\dot{r}\dot{\theta} = 4(0) + 2(0)(0.2) = 0$ **Ans.**

$a_z = \ddot{z} = -0.00725$ m/s^2 **Ans.**

© 2010 Pearson Education, Inc., Upper Saddle River, NJ. All rights reserved. This material is protected under all copyright laws as they currently exist. No portion of this material may be reproduced, in any form or by any means, without permission in writing from the publisher.

12–175. The motion of peg P is constrained by the lemniscate curved slot in OB and by the slotted arm OA. If OA rotates counterclockwise with a constant angular velocity of $\dot{\theta} = 3$ rad/s, determine the magnitudes of the velocity and acceleration of peg P at $\theta = 30°$.

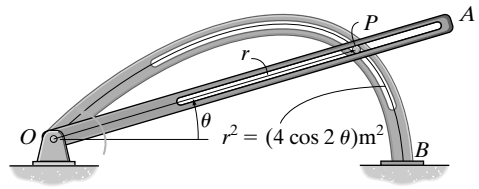

Time Derivatives:

$$r^2 = 4\cos 2\theta$$

$$2r\dot{r} = -8\sin 2\theta\dot{\theta}$$

$$\dot{r} = \left(\frac{-4\sin 2\theta\dot{\theta}}{r}\right)\text{m/s} \qquad \dot{\theta} = 3\text{ rad/s}$$

$$2\left(r\ddot{r} + \dot{r}^2\right) = -8\left(\sin 2\theta\ddot{\theta} + 2\cos 2\theta\,\dot{\theta}^2\right)$$

$$\ddot{r} = \left[\frac{-4\left(\sin 2\theta\ddot{\theta} + 2\cos 2\theta\dot{\theta}^2\right) - \dot{r}^2}{r}\right]\text{m/s}^2 \qquad \ddot{\theta} = 0$$

$\dot{\theta} = 3$ rad/s. Thus, when $\theta = 30°$,

$$r\big|_{\theta=30°} = \sqrt{4\cos 60°} = \sqrt{2}\text{ m}$$

$$\dot{r}\big|_{\theta=30°} = \frac{-4\sin 60°(3)}{\sqrt{2}} = -7.348\text{ m/s}$$

$$\ddot{r}\big|_{\theta=30°} = \frac{-4\left[0 + 2\cos 60°(3)^2\right] - (-7.348)^2}{\sqrt{2}} = -63.64\text{ m/s}^2$$

Velocity:

$$v_r = \dot{r} = -7.348\text{ m/s} \qquad v_\theta = r\dot{\theta} = \sqrt{2}(3) = 4.243\text{ m/s}$$

Thus, the magnitude of the peg's velocity is

$$v = \sqrt{{v_r}^2 + {v_\theta}^2} = \sqrt{7.348^2 + (-4.243)^2} = 8.49\text{ m/s} \qquad \textbf{Ans.}$$

Acceleration:

$$a_r = \ddot{r} - r\dot{\theta}^2 = -63.64 - \sqrt{2}(3)^2 = -76.37\text{ m/s}^2$$

$$a_\theta = r\ddot{\theta} + 2\dot{r}\dot{\theta} = 0 + 2(-7.348)(3) = -44.09\text{ m/s}^2$$

Thus, the magnitude of the peg's acceleration is

$$a = \sqrt{{a_r}^2 + {a_\theta}^2} = \sqrt{(-76.37)^2 + (-44.09)^2} = 88.2\text{ m/s}^2 \qquad \textbf{Ans.}$$

© 2010 Pearson Education, Inc., Upper Saddle River, NJ. All rights reserved. This material is protected under all copyright laws as they currently exist. No portion of this material may be reproduced, in any form or by any means, without permission in writing from the publisher.

***12–176.** The motion of peg P is constrained by the lemniscate curved slot in OB and by the slotted arm OA. If OA rotates counterclockwise with an angular velocity of $\dot{\theta} = (3t^{3/2})$ rad/s, where t is in seconds, determine the magnitudes of the velocity and acceleration of peg P at $\theta = 30°$. When $t = 0, \theta = 0°$.

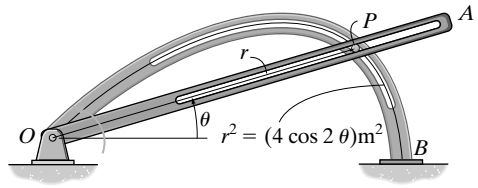

Time Derivatives:

$$r^2 = 4\cos 2\theta$$

$$2r\dot{r} = -8\sin 2\theta\dot{\theta}$$

$$\dot{r} = \left(\frac{-4\sin 2\theta\dot{\theta}}{r}\right)\text{m/s}$$

$$2\left(r\ddot{r} + \dot{r}^2\right) = -8\left(\sin 2\theta\ddot{\theta} + 2\cos 2\theta\,\dot{\theta}^2\right)$$

$$\ddot{r} = \left[\frac{-4\left(\sin 2\theta\ddot{\theta} + 2\cos 2\theta\dot{\theta}^2\right) - \dot{r}^2}{r}\right]\text{m/s}^2$$

$$\frac{d\theta}{dt} = \dot{\theta} = 3t^{3/2}$$

$$\int_{0°}^{\theta} d\theta = \int_0^t 3t^{3/2}dt$$

$$\theta = \left(\frac{6}{5}t^{5/2}\right)\text{rad}$$

At $\theta = 30° = \dfrac{\pi}{6}$ rad,

$$\frac{\pi}{6} = \frac{6}{5}t^{5/2} \qquad t = 0.7177\text{ s}$$

$$\dot{\theta} = 3t^{3/2}\Big|_{t=0.7177\text{ s}} = 1.824\text{ rad/s}$$

$$\ddot{\theta} = \frac{9}{2}t^{1/2}\Big|_{t=0.7177\text{ s}} = 3.812\text{ rad/s}^2$$

Thus,

$$r\big|_{\theta=30°} = \sqrt{4\cos 60°} = \sqrt{2}\text{ m}$$

$$\dot{r}\big|_{\theta=30°} = \frac{-4\sin 60°(1.824)}{\sqrt{2}} = -4.468\text{ m/s}$$

$$\ddot{r}\big|_{\theta=30°} = \frac{-4\left[\sin 60°(3.812) + 2\cos 60°(1.824)^2\right] - (-4.468)^2}{\sqrt{2}} = -32.86\text{ m/s}^2$$

© 2010 Pearson Education, Inc., Upper Saddle River, NJ. All rights reserved. This material is protected under all copyright laws as they currently exist. No portion of this material may be reproduced, in any form or by any means, without permission in writing from the publisher.

12–176. Continued

Velocity:

$v_r = \dot{r} = -4.468 \text{ m/s}$ $\qquad$ $v_\theta = r\dot{\theta} = \sqrt{2}(1.824) = 2.579 \text{ m/s}$

Thus, the magnitude of the peg's velocity is

$$v = \sqrt{{v_r}^2 + {v_\theta}^2} = \sqrt{(-4.468)^2 + 2.579^2} = 5.16 \text{ m/s}$$ **Ans.**

Acceleration:

$$a_r = \ddot{r} - r\dot{\theta}^2 = -32.86 - \sqrt{2}(1.824)^2 = -37.57 \text{ m/s}^2$$

$$a_\theta = r\ddot{\theta} + 2\dot{r}\dot{\theta} = \sqrt{2}(3.812) + 2(-4.468)(1.824) = -10.91 \text{ m/s}^2$$

Thus, the magnitude of the peg's acceleration is

$$a = \sqrt{{a_r}^2 + {a_\theta}^2} = \sqrt{(-37.57)^2 + (-10.91)^2} = 39.1 \text{ m/s}^2$$ **Ans.**

© 2010 Pearson Education, Inc., Upper Saddle River, NJ. All rights reserved. This material is protected under all copyright laws as they currently exist. No portion of this material may be reproduced, in any form or by any means, without permission in writing from the publisher.

•12–177. The driver of the car maintains a constant speed of 40 m/s. Determine the angular velocity of the camera tracking the car when $\theta = 15°$.

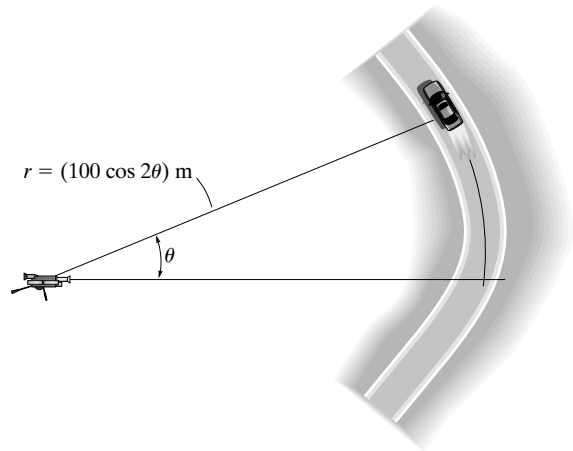

Time Derivatives:

$$r = 100 \cos 2\theta$$

$$\dot{r} = (-200 \sin 2\theta\dot{\theta}) \text{ m/s}$$

At $\theta = 15°$,

$$r\big|_{\theta=15°} = 100 \cos 30° = 86.60 \text{ m}$$

$$\dot{r}\big|_{\theta=15°} = -200 \sin 30°\dot{\theta} = -100\dot{\theta} \text{ m/s}$$

Velocity: Referring to Fig. a, $v_r = -40 \cos \phi$ and $v_\theta = 40 \sin \phi$.

$$v_r = \dot{r}$$

$$-40 \cos \phi = -100\dot{\theta} \qquad \textbf{(1)}$$

and

$$v_\theta = r\dot{\theta}$$

$$40 \sin \phi = 86.60\dot{\theta} \qquad \textbf{(2)}$$

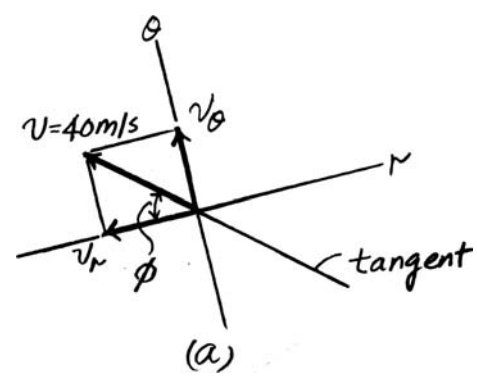

Solving Eqs. (1) and (2) yields

$$\phi = 40.89°$$

$$\dot{\theta} = 0.3024 \text{ rad/s} = 0.302 \text{ rad/s} \qquad \textbf{Ans.}$$

© 2010 Pearson Education, Inc., Upper Saddle River, NJ. All rights reserved. This material is protected under all copyright laws as they currently exist. No portion of this material may be reproduced, in any form or by any means, without permission in writing from the publisher.

12–178. When $\theta = 15°$, the car has a speed of 50 m/s which is increasing at 6 m/s^2. Determine the angular velocity of the camera tracking the car at this instant.

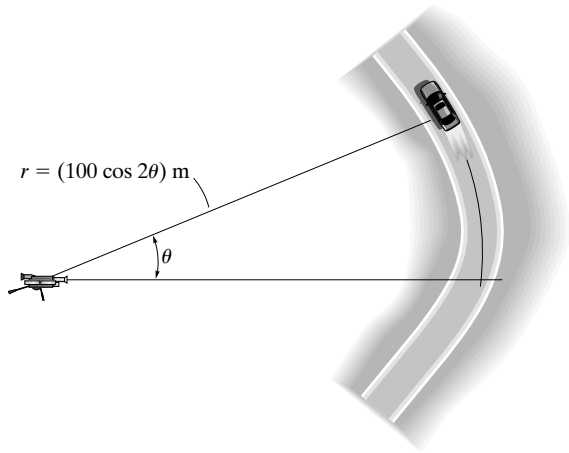

Time Derivatives:

$$r = 100 \cos 2\theta$$

$$\dot{r} = (-200 \sin 2\theta\dot{\theta}) \text{ m/s}$$

$$\ddot{r} = -200\left[\sin 2\theta\ddot{\theta} + 2 \cos 2\theta\dot{\theta}^2\right] \text{ m/s}^2$$

At $\theta = 15°$,

$$r\big|_{\theta=15°} = 100 \cos 30° = 86.60 \text{ m}$$

$$\dot{r}\big|_{\theta=15°} = -200 \sin 30°\dot{\theta} = -100\dot{\theta} \text{ m/s}$$

$$\ddot{r}\big|_{\theta=15°} = -200\left[\sin 30°\ddot{\theta} + 2 \cos 30°\dot{\theta}^2\right] = \left(-100\ddot{\theta} - 346.41\dot{\theta}^2\right) \text{ m/s}^2$$

Velocity: Referring to Fig. a, $v_r = -50 \cos \phi$ and $v_\theta = 50 \sin \phi$. Thus,

$$v_r = \dot{r}$$

$$-50 \cos \phi = -100\dot{\theta} \qquad \textbf{(1)}$$

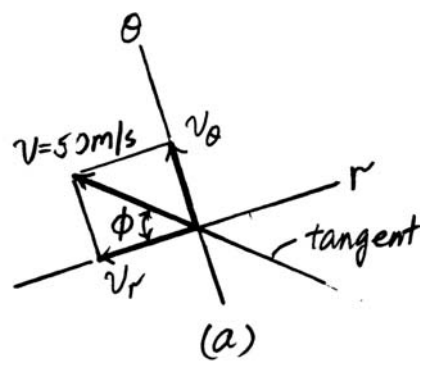

and

$$v_\theta = r\dot{\theta}$$

$$50 \sin \phi = 86.60\dot{\theta} \qquad \textbf{(2)}$$

Solving Eqs. (1) and (2) yields

$$\phi = 40.89°$$

$$\dot{\theta} = 0.378 \text{ rad/s} \qquad \textbf{Ans.}$$

12–179. If the cam rotates clockwise with a constant angular velocity of $\dot{\theta} = 5$ rad/s, determine the magnitudes of the velocity and acceleration of the follower rod AB at the instant $\theta = 30°$. The surface of the cam has a shape of limaçon defined by $r = (200 + 100 \cos \theta)$ mm.

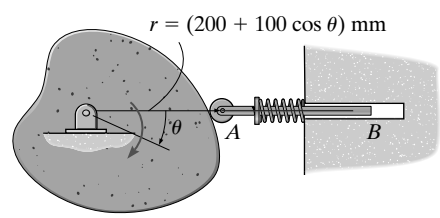

Time Derivatives:

$$r = (200 + 100 \cos \theta) \text{ mm}$$

$$\dot{r} = (-100 \sin \theta\dot{\theta}) \text{ mm/s} \qquad \dot{\theta} = 5 \text{ rad/s}$$

$$\ddot{r} = -100\left[\sin \theta\ddot{\theta} + \cos \theta\dot{\theta}^2\right] \text{ mm/s}^2 \qquad \ddot{\theta} = 0$$

When $\theta = 30°$,

$$r\big|_{\theta=30°} = 200 + 100 \cos 30° = 286.60 \text{ mm}$$

$$\dot{r}\big|_{\theta=30°} = -100 \sin 30°(5) = -250 \text{ mm/s}$$

$$\dot{r}\big|_{\theta=30°} = -100\left[0 + \cos 30°\left(5^2\right)\right] = -2165.06 \text{ mm/s}^2$$

Velocity: The radial component gives the rod's velocity.

$$v_r = \dot{r} = -250 \text{ mm/s} \qquad \textbf{Ans.}$$

Acceleration: The radial component gives the rod's acceleration.

$$a_r = \ddot{r} - r\dot{\theta}^2 = -2156.06 - 286.60(5^2) = -9330 \text{ mm/s}^2 \qquad \textbf{Ans.}$$

© 2010 Pearson Education, Inc., Upper Saddle River, NJ. All rights reserved. This material is protected under all copyright laws as they currently exist. No portion of this material may be reproduced, in any form or by any means, without permission in writing from the publisher.

***12–180.** At the instant $\theta = 30°$, the cam rotates with a clockwise angular velocity of $\dot{\theta} = 5$ rad/s and and angular acceleration of $\ddot{\theta} = 6$ rad/s^2. Determine the magnitudes of the velocity and acceleration of the follower rod AB at this instant. The surface of the cam has a shape of a limaçon defined by $r = (200 + 100 \cos \theta)$ mm.

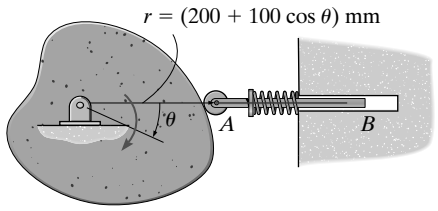

Time Derivatives:

$$r = (200 - 100 \cos \theta) \text{ mm}$$

$$\dot{r} = (-100 \sin \theta \dot{\theta}) \text{ mm/s}$$

$$\ddot{r} = -100\left[\sin \theta \ddot{\theta} + \cos \theta \dot{\theta}^2\right] \text{ mm/s}^2$$

When $\theta = 30°$,

$$r\big|_{\theta=30°} = 200 + 100 \cos 30° = 286.60 \text{ mm}$$

$$\dot{r}\big|_{\theta=30°} = -100 \sin 30°(5) = -250 \text{ mm/s}$$

$$\ddot{r}\big|_{\theta=30°} = -100\left[\sin 30°(6) + \cos 30°\left(5^2\right)\right] = -2465.06 \text{ mm/s}^2$$

Velocity: The radial component gives the rod's velocity.

$$v_r = \dot{r} = -250 \text{ mm/s} \qquad \textbf{Ans.}$$

Acceleration: The radial component gives the rod's acceleration.

$$a_r = \ddot{r} - r\dot{\theta}^2 = -2465.06 - 286.60\left(5^2\right) = -9630 \text{ mm/s}^2 \qquad \textbf{Ans.}$$

© 2010 Pearson Education, Inc., Upper Saddle River, NJ. All rights reserved. This material is protected under all copyright laws as they currently exist. No portion of this material may be reproduced, in any form or by any means, without permission in writing from the publisher.

•12–181. The automobile travels from a parking deck down along a cylindrical spiral ramp at a constant speed of $v = 1.5$ m/s. If the ramp descends a distance of 12 m for every full revolution, $\theta = 2\pi$ rad, determine the magnitude of the car's acceleration as it moves along the ramp, $r = 10$ m. *Hint:* For part of the solution, note that the tangent to the ramp at any point is at an angle of $\phi = \tan^{-1}(12/[2\pi(10)]) = 10.81°$ from the horizontal. Use this to determine the velocity components v_θ and v_z, which in turn are used to determine $\dot{\theta}$ and $\dot{z}$.

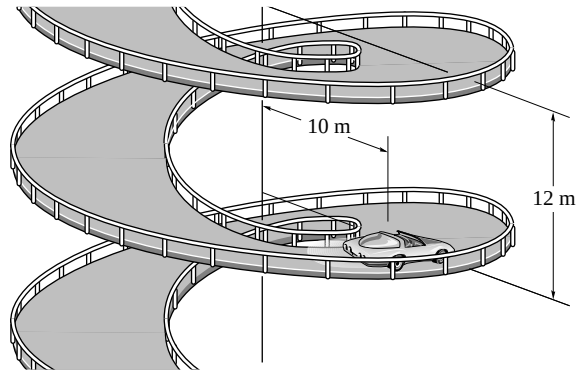

$$\phi = \tan^{-1}\left(\frac{12}{2\pi(10)}\right) = 10.81°$$

$$v = 1.5 \text{ m/s}$$

$$v_r = 0$$

$$v_\theta = 1.5 \cos 10.81° = 1.473 \text{ m/s}$$

$$v_z = -1.5 \sin 10.81° = -0.2814 \text{ m/s}$$

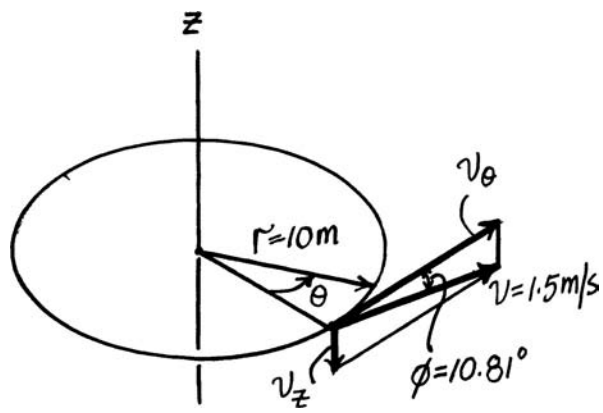

Since

$$r = 10 \qquad \dot{r} = 0 \qquad r = 0$$

$$v_\theta = r\dot{\theta} = 1.473 \qquad \theta = \frac{1.473}{10} = 0.1473$$

Since $\theta = 0$

$$a_r = r - \dot{r}\theta^2 = 0 - 10(0.1473)^2 = -0.217$$

$$a_\theta = \dot{r}\ddot{\theta} + 2r\theta = 10(0) + 2(0)(0.1473) = 0$$

$$a_z = \ddot{z} = 0$$

$$a = \sqrt{(-0.217)^2 + (0)^2 + (0)^2} = 0.217 \text{ m/s}^2 \qquad \textbf{Ans.}$$

© 2010 Pearson Education, Inc., Upper Saddle River, NJ. All rights reserved. This material is protected under all copyright laws as they currently exist. No portion of this material may be reproduced, in any form or by any means, without permission in writing from the publisher.

12–182. The box slides down the helical ramp with a constant speed of $v = 2$ m/s. Determine the magnitude of its acceleration. The ramp descends a vertical distance of 1 m for every full revolution. The mean radius of the ramp is $r = 0.5$ m.

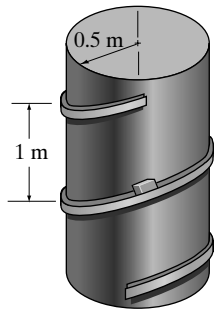

Velocity: The inclination angle of the ramp is $\phi = \tan^{-1}\dfrac{L}{2\pi r} = \tan^{-1}\left[\dfrac{1}{2\pi(0.5)}\right] = 17.66°$.

Thus, from Fig. a, $v_\theta = 2\cos 17.66° = 1.906$ m/s and $v_z = 2\sin 17.66° = 0.6066$ m/s. Thus,

$$v_\theta = r\dot{\theta}$$

$$1.906 = 0.5\dot{\theta}$$

$$\dot{\theta} = 3.812 \text{ rad/s}$$

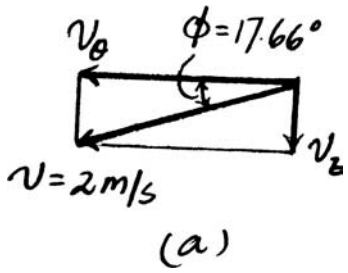

Acceleration: Since $r = 0.5$ m is constant, $\dot{r} = \ddot{r} = 0$. Also, $\dot{\theta}$ is constant, then $\ddot{\theta} = 0$. Using the above results,

$$a_r = \ddot{r} - r\dot{\theta}^2 = 0 - 0.5(3.812)^2 = -7.264 \text{ m/s}^2$$

$$a_\theta = r\ddot{\theta} + 2\dot{r}\dot{\theta} = 0.5(0) + 2(0)(3.812) = 0$$

Since $\mathbf{v}_z$ is constant $a_z = 0$. Thus, the magnitude of the box's acceleration is

$$a = \sqrt{a_r{}^2 + a_\theta{}^2 + a_z{}^2} = \sqrt{(-7.264)^2 + 0^2 + 0^2} = 7.26 \text{ m/s}^2 \qquad \textbf{Ans.}$$

© 2010 Pearson Education, Inc., Upper Saddle River, NJ. All rights reserved. This material is protected under all copyright laws as they currently exist. No portion of this material may be reproduced, in any form or by any means, without permission in writing from the publisher.

12–183. The box slides down the helical ramp which is defined by $r = 0.5$ m, $\theta = (0.5t^3)$ rad, and $z = (2 - 0.2t^2)$ m, where t is in seconds. Determine the magnitudes of the velocity and acceleration of the box at the instant $\theta = 2\pi$ rad.

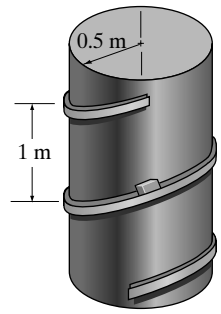

Time Derivatives:

$$r = 0.5 \text{ m}$$

$$\dot{r} = \ddot{r} = 0$$

$$\dot{\theta} = \left(1.5t^2\right)\text{rad/s} \qquad \ddot{\theta} = 3(3t) \text{ rad/s}^2$$

$$z = 2 - 0.2t^2$$

$$\dot{z} = (-0.4t) \text{ m/s} \qquad \ddot{z} = -0.4 \text{ m/s}^2$$

When $\theta = 2\pi$ rad,

$$2\pi = 0.5t^3 \qquad t = 2.325 \text{ s}$$

Thus,

$$\dot{\theta}\big|_{t=2.325\text{ s}} = 1.5(2.325)^2 = 8.108 \text{ rad/s}$$

$$\ddot{\theta}\big|_{t=2.325\text{ s}} = 3(2.325) = 6.975 \text{ rad/s}^2$$

$$\dot{z}\big|_{t=2.325\text{ s}} = -0.4(2.325) = -0.92996 \text{ m/s}$$

$$\ddot{z}\big|_{t=2.325\text{ s}} = -0.4 \text{ m/s}^2$$

Velocity:

$$v_r = \dot{r} = 0$$

$$v_\theta = r\dot{\theta} = 0.5(8.108) = 4.05385 \text{ m/s}$$

$$v_z = \dot{z} = -0.92996 \text{ m/s}$$

Thus, the magnitude of the box's velocity is

$$v = \sqrt{{v_r}^2 + {v_\theta}^2 + {v_z}^2} = \sqrt{0^2 + 4.05385^2 + (-0.92996)^2} = 4.16 \text{ m/s} \qquad \textbf{Ans.}$$

Acceleration:

$$a_r = \ddot{r} - r\dot{\theta}^2 = 0 - 0.5(8.108)^2 = -32.867 \text{ m/s}^2$$

$$a_\theta = r\ddot{\theta} + 2\dot{r}\dot{\theta} = 0.5(6.975) + 2(0)(8.108)^2 = 3.487 \text{ m/s}^2$$

$$a_z = \ddot{z} = -0.4 \text{ m/s}^2$$

Thus, the magnitude of the box's acceleration is

$$a = \sqrt{{a_r}^2 + {a_\theta}^2 + {a_z}^2} = \sqrt{(-32.867)^2 + 3.487^2 + (-0.4)^2} = 33.1 \text{ m/s}^2 \qquad \textbf{Ans.}$$

© 2010 Pearson Education, Inc., Upper Saddle River, NJ. All rights reserved. This material is protected under all copyright laws as they currently exist. No portion of this material may be reproduced, in any form or by any means, without permission in writing from the publisher.

***12–184.** Rod OA rotates counterclockwise with a constant angular velocity of $\dot{\theta} = 6$ rad/s. Through mechanical means collar B moves along the rod with a speed of $\dot{r} = (4t^2)$ m/s, where t is in seconds. If $r = 0$ when $t = 0$, determine the magnitudes of velocity and acceleration of the collar when $t = 0.75$ s.

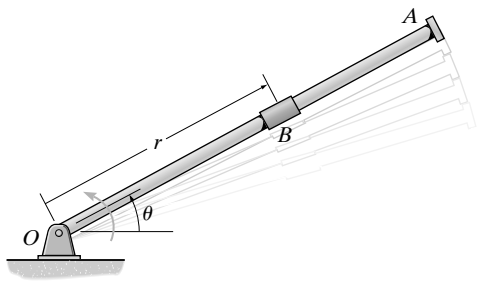

Time Derivatives: Using the initial condition $r = 0$ when $t = 0$ s,

$$\frac{dr}{dt} = \dot{r} = 4t^2$$

$$\int_0^r dr = \int_0^t 4t^2\, dt$$

$$r = \left[\frac{4}{3}t^3\right] \text{m}$$

$$r = \frac{4}{3}t^3\Big|_{t=0.75\text{ s}} = 0.5625 \text{ m}$$

$$\dot{r} = 4t^2\Big|_{t=0.75\text{ s}} = 2.25 \text{ m/s} \qquad \dot{\theta} = 6 \text{ rad/s}$$

$$\ddot{r} = 8t\Big|_{t=0.75\text{ s}} = 6 \text{ m/s}^2 \qquad \ddot{\theta} = 0$$

Velocity:

$$v_r = \dot{r} = 2.25 \text{ m/s} \qquad v_\theta = r\dot{\theta} = 0.5625(6) = 3.375 \text{ m/s}$$

Thus, the magnitude of the collar's velocity is

$$v = \sqrt{{v_r}^2 + {v_\theta}^2} = \sqrt{2.25^2 + 3.375^2} = 4.06 \text{ m/s} \qquad \textbf{Ans.}$$

Acceleration:

$$a_r = \ddot{r} - r\dot{\theta}^2 = 6 - 0.5625\left(6^2\right) = -14.25 \text{ m/s}^2$$

$$a_\theta = r\ddot{\theta} + 2\dot{r}\dot{\theta} = 0.5625(0) + 2(2.25)(6) = 27 \text{ m/s}^2$$

Thus, the magnitude of the collar's acceleration is

$$a = \sqrt{{a_r}^2 + {a_\theta}^2} = \sqrt{(-14.25)^2 + (-27)^2} = 30.5 \text{ m/s}^2 \qquad \textbf{Ans.}$$

© 2010 Pearson Education, Inc., Upper Saddle River, NJ. All rights reserved. This material is protected under all copyright laws as they currently exist. No portion of this material may be reproduced, in any form or by any means, without permission in writing from the publisher.

•12–185. Rod OA is rotating counterclockwise with an angular velocity of $\dot{\theta} = (2t^2)$ rad/s. Through mechanical means collar B moves along the rod with a speed of $\dot{r} = (4t^2)$ m/s. If $\theta = 0$ and $r = 0$ when $t = 0$, determine the magnitudes of velocity and acceleration of the collar at $\theta = 60°$.

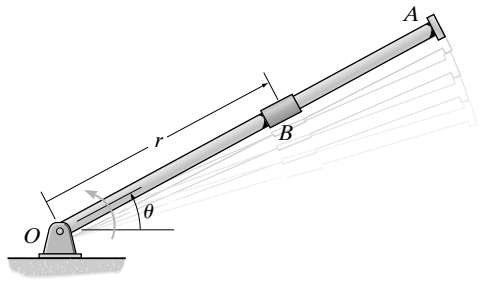

Position: Using the initial condition $\theta = 0$ when $t = 0$ s,

$$\frac{d\theta}{dt} = \dot{\theta} = 2t^2$$

$$\int_{0°}^{\theta} d\theta = \int_0^t 2t^2 dt$$

$$\theta = \left[\frac{2}{3}t^3\right] \text{rad}$$

At $\theta = 60° = \frac{\pi}{3}$ rad,

$$\frac{\pi}{3} = \frac{2}{3}t^3 \qquad t = 1.162 \text{ s}$$

Using the initial condition $r = 0$ when $t = 0$ s,

$$\frac{dr}{dt} = \dot{r} = 4t^2$$

$$\int_0^r dr = \int_0^t 4t^2\, dt$$

$$r = \left[\frac{4}{3}t^3\right] \text{m}$$

When $t = 1.162$ s $\left(\theta = \frac{\pi}{3} \text{ rad}\right)$,

$$r = \frac{4}{3}t^3\Big|_{t=1.162 \text{ s}} = 2.094 \text{ m}$$

Time Derivatives:

$$\dot{r} = 4t^2\Big|_{t=1.162 \text{ s}} = 5.405 \text{ m/s} \qquad \dot{\theta} = 2t^2\Big|_{t=1.162 \text{ s}} = 2.703 \text{ rad/s}$$

$$\ddot{r} = 8t\Big|_{t=1.162 \text{ s}} = 9.300 \text{ m/s}^2 \qquad \ddot{\theta} = 4t\Big|_{t=1.162 \text{ s}} = 4.650 \text{ rad/s}^2$$

Velocity:

$$v_r = \dot{r} = 5.405 \text{ m/s} \qquad v_\theta = r\dot{\theta} = 2.094(2.703) = 5.660 \text{ m/s}$$

Thus, the magnitude of the collar's velocity is

$$v = \sqrt{v_r{}^2 + v_\theta{}^2} = \sqrt{5.405^2 + 5.660^2} = 7.83 \text{ m/s} \qquad \textbf{Ans.}$$

Acceleration:

$$a_r = \ddot{r} - r\dot{\theta}^2 = 9.300 - 2.094\left(2.703^2\right) = -5.998 \text{ m/s}^2$$

$$a_\theta = r\ddot{\theta} + 2\dot{r}\dot{\theta} = 2.094(4.650) + 2(5.405)(2.703) = 38.95 \text{ m/s}^2$$

Thus, the magnitude of the collar's acceleration is

$$a = \sqrt{a_r{}^2 + a_\theta{}^2} = \sqrt{(-5.998)^2 + 38.95^2} = 39.4 \text{ m/s}^2 \qquad \textbf{Ans.}$$

© 2010 Pearson Education, Inc., Upper Saddle River, NJ. All rights reserved. This material is protected under all copyright laws as they currently exist. No portion of this material may be reproduced, in any form or by any means, without permission in writing from the publisher.

12–186. The slotted arm AB drives pin C through the spiral groove described by the equation $r = a\theta$. If the angular velocity is constant at $\dot{\theta}$, determine the radial and transverse components of velocity and acceleration of the pin.

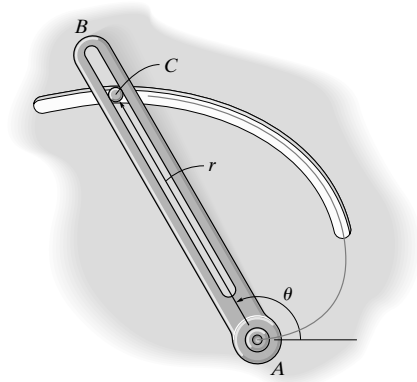

Time Derivatives: Since $\dot{\theta}$ is constant, then $\ddot{\theta} = 0$.

$$r = a\theta \qquad \dot{r} = a\dot{\theta} \qquad \ddot{r} = a\ddot{\theta} = 0$$

Velocity: Applying Eq. 12–25, we have

$$v_r = \dot{r} = a\dot{\theta} \qquad \textbf{Ans.}$$

$$v_\theta = r\dot{\theta} = a\theta\dot{\theta} \qquad \textbf{Ans.}$$

Acceleration: Applying Eq. 12–29, we have

$$a_r = \ddot{r} - r\dot{\theta}^2 = 0 - a\theta\dot{\theta}^2 = -a\theta\dot{\theta}^2 \qquad \textbf{Ans.}$$

$$a_\theta = r\ddot{\theta} + 2\dot{r}\dot{\theta} = 0 + 2(a\dot{\theta})(\dot{\theta}) = 2a\dot{\theta}^2 \qquad \textbf{Ans.}$$

12–187. The slotted arm AB drives pin C through the spiral groove described by the equation $r = (1.5\,\theta)$ ft, where θ is in radians. If the arm starts from rest when $\theta = 60°$ and is driven at an angular velocity of $\dot{\theta} = (4t)$ rad/s, where t is in seconds, determine the radial and transverse components of velocity and acceleration of the pin C when $t = 1$ s.

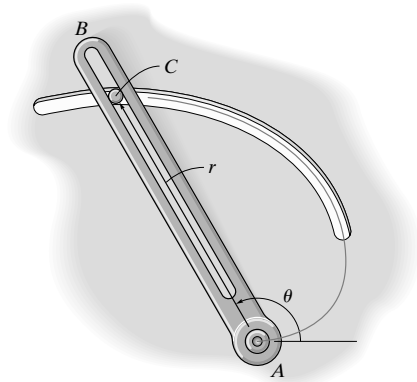

Time Derivatives: Here, $\dot{\theta} = 4t$ and $\ddot{\theta} = 4$ rad/s^2.

$$r = 1.5\theta \qquad \dot{r} = 1.5\dot{\theta} = 1.5(4t) = 6t \qquad \ddot{r} = 1.5\ddot{\theta} = 1.5(4) = 6 \text{ ft/s}^2$$

Velocity: Integrate the angular rate, $\int_{\frac{\pi}{3}}^{\theta} d\theta = \int_0^t 4t\,dt$, we have $\theta = \frac{1}{3}(6t^2 + \pi)$ rad.

Then, $r = \left\{\frac{1}{2}(6t^2 + \pi)\right\}$ ft. At $t = 1$ s, $r = \frac{1}{2}\left[6(1^2) + \pi\right] = 4.571$ ft, $\dot{r} = 6(1) = 6.00$ ft/s and $\dot{\theta} = 4(1) = 4$ rad/s. Applying Eq. 12–25, we have

$$v_r = \dot{r} = 6.00 \text{ ft/s} \qquad \textbf{Ans.}$$

$$v_\theta = r\dot{\theta} = 4.571\,(4) = 18.3 \text{ ft/s} \qquad \textbf{Ans.}$$

Acceleration: Applying Eq. 12–29, we have

$$a_r = \ddot{r} - r\dot{\theta}^2 = 6 - 4.571\left(4^2\right) = -67.1 \text{ ft/s}^2 \qquad \textbf{Ans.}$$

$$a_\theta = r\ddot{\theta} + 2\dot{r}\dot{\theta} = 4.571(4) + 2(6)\,(4) = 66.3 \text{ ft/s}^2 \qquad \textbf{Ans.}$$

© 2010 Pearson Education, Inc., Upper Saddle River, NJ. All rights reserved. This material is protected under all copyright laws as they currently exist. No portion of this material may be reproduced, in any form or by any means, without permission in writing from the publisher.

***12–188.** The partial surface of the cam is that of a logarithmic spiral $r = (40e^{0.05\theta})$ mm, where θ is in radians. If the cam rotates at a constant angular velocity of $\dot{\theta} = 4$ rad/s, determine the magnitudes of the velocity and acceleration of the point on the cam that contacts the follower rod at the instant $\theta = 30°$.

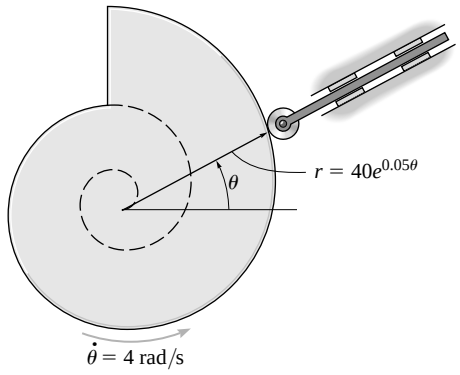

$r = 40e^{0.05\,\theta}$

$\dot{r} = 2e^{0.05\theta}\dot{\theta}$

$\ddot{r} = 0.1e^{0.0\,5\,\theta}\left(\dot{\theta}\right)^2 + 2e^{0.05\,\theta}\ddot{\theta}$

$\theta = \dfrac{\pi}{6}$

$\dot{\theta} = 4$

$\ddot{\theta} = 0$

$r = 40e^{\,0.05\left(\frac{\pi}{6}\right)} = 41.0610$

$\dot{r} = 2e^{\,0.05\left(\frac{\pi}{6}\right)}(4) = 8.2122$

$\ddot{r} = 0.1e^{\,0.05\left(\frac{\pi}{6}\right)}(4)^2 + 0 = 1.64244$

$v_r = \dot{r} = 8.2122$

$v_\theta = r\dot{\theta} = 41.0610(4) = 164.24$

$v = \sqrt{(8.2122)^2 + (164.24)^2} = 164$ mm/s **Ans.**

$a_r = \ddot{r} - r\dot{\theta}^2 = 1.642\,44 - 41.0610(4)^2 = -655.33$

$a_\theta = r\ddot{\theta} + 2\dot{r}\dot{\theta} = 0 + 2(8.2122)(4) = 65.6976$

$a = \sqrt{(-655.33)^2 + (65.6976)^2} = 659$ mm/s^2 **Ans.**

© 2010 Pearson Education, Inc., Upper Saddle River, NJ. All rights reserved. This material is protected under all copyright laws as they currently exist. No portion of this material may be reproduced, in any form or by any means, without permission in writing from the publisher.

•12–189. Solve Prob. 12–188, if the cam has an angular acceleration of $\ddot{\theta} = 2\ \text{rad/s}^2$ when its angular velocity is $\dot{\theta} = 4\ \text{rad/s}$ at $\theta = 30°$.

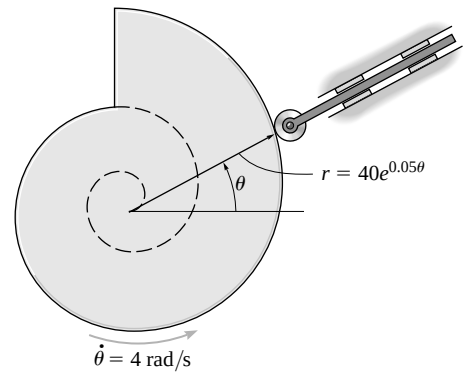

$r = 40e^{0.05\theta}$

$\dot{r} = 2e^{0.05\,\theta}\dot{\theta}$

$\ddot{r} = 0.1e^{0.05\,\theta}\left(\theta\right)^2 + 2e^{0.05\,\theta}\dot{\theta}$

$\theta = \dfrac{\pi}{6}$

$\dot{\theta} = 4$

$\ddot{\theta} = 2$

$r = 40e^{0.05\left(\frac{\pi}{6}\right)} = 41.0610$

$\dot{r} = 2e^{0.05\left(\frac{\pi}{6}\right)}(4) = 8.2122$

$\ddot{r} = 0.1e^{0.05\left(\frac{\pi}{6}\right)}(4)^2 + 2e^{0.05\left(\frac{\pi}{6}\right)}(2) = 5.749$

$v_r = \dot{r} = 8.2122$

$v_\theta = r\dot{\theta} = 41.0610(4) = 164.24$

$v = \sqrt{(8.2122)^2 + (164.24)^2} = 164\ \text{mm/s}$ **Ans.**

$a_r = \ddot{r} - r\dot{\theta}^2 = 5.749 - 41.0610(4)^2 = -651.2$

$a_\theta = r\ddot{\theta} + 2\dot{r}\dot{\theta} = 41.0610(2) + 2(8.2122)(4) = 147.8197$

$a = \sqrt{(-651.2)^2 + (147.8197)^2} = 668\ \text{mm/s}^2$ **Ans.**

© 2010 Pearson Education, Inc., Upper Saddle River, NJ. All rights reserved. This material is protected under all copyright laws as they currently exist. No portion of this material may be reproduced, in any form or by any means, without permission in writing from the publisher.

12–190. A particle moves along an Archimedean spiral $r = (8\theta)$ ft, where θ is given in radians. If $\dot{\theta} = 4$ rad/s (constant), determine the radial and transverse components of the particle's velocity and acceleration at the instant $\theta = \pi/2$ rad. Sketch the curve and show the components on the curve.

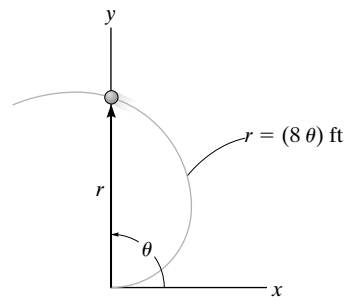

Time Derivatives: Since $\dot{\theta}$ is constant, $\ddot{\theta} = 0$.

$$r = 8\theta = 8\left(\frac{\pi}{2}\right) = 4\pi\text{ft} \qquad \dot{r} = 8\dot{\theta} = 8(4) = 32.0\text{ ft/s} \qquad \ddot{r} = 8\ddot{\theta} = 0$$

Velocity: Applying Eq. 12–25, we have

$$v_r = \dot{r} = 32.0\text{ ft/s} \qquad \textbf{Ans.}$$

$$v_\theta = r\dot{\theta} = 4\pi(4) = 50.3\text{ ft/s} \qquad \textbf{Ans.}$$

Acceleration: Applying Eq. 12–29, we have

$$a_r = \ddot{r} - r\dot{\theta}^2 = 0 - 4\pi\left(4^2\right) = -201\text{ ft/s}^2 \qquad \textbf{Ans.}$$

$$a_\theta = r\ddot{\theta} + 2\dot{r}\dot{\theta} = 0 + 2(32.0)(4) = 256\text{ ft/s}^2 \qquad \textbf{Ans.}$$

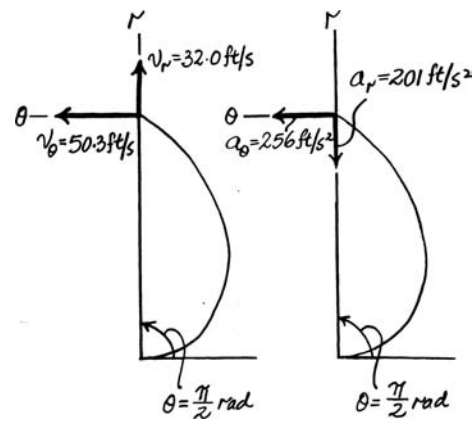

12–191. Solve Prob. 12–190 if the particle has an angular acceleration $\ddot{\theta} = 5$ rad/s^2 when $\dot{\theta} = 4$ rad/s at $\theta = \pi/2$ rad.

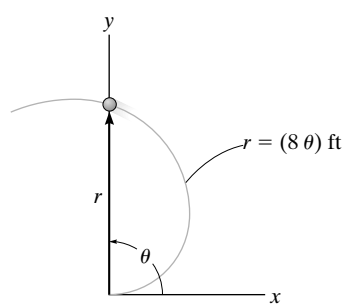

Time Derivatives: Here,

$$r = 8\theta = 8\left(\frac{\pi}{2}\right) = 4\pi\text{ ft} \qquad \dot{r} = 8\dot{\theta} = 8(4) = 32.0\text{ ft/s}$$

$$\ddot{r} = 8\ddot{\theta} = 8(5) = 40\text{ ft/s}^2$$

Velocity: Applying Eq. 12–25, we have

$$v_r = \dot{r} = 32.0\text{ ft/s} \qquad \textbf{Ans.}$$

$$v_\theta = r\dot{\theta} = 4\pi(4) = 50.3\text{ ft/s} \qquad \textbf{Ans.}$$

Acceleration: Applying Eq. 12–29, we have

$$a_r = \ddot{r} - r\dot{\theta}^2 = 40 - 4\pi\left(4^2\right) = -161\text{ ft/s}^2 \qquad \textbf{Ans.}$$

$$a_\theta = r\ddot{\theta} + 2\dot{r}\dot{\theta} = 4\pi(5) + 2(32.0)(4) = 319\text{ ft/s}^2 \qquad \textbf{Ans.}$$

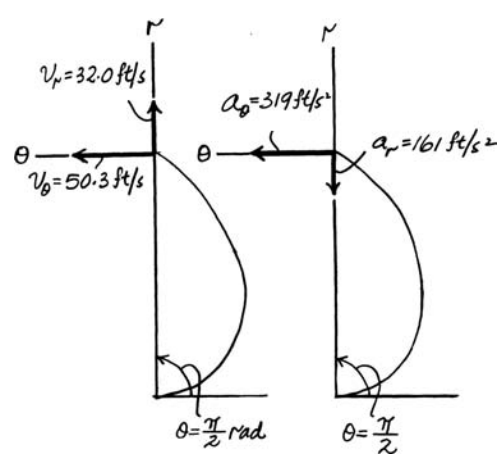

© 2010 Pearson Education, Inc., Upper Saddle River, NJ. All rights reserved. This material is protected under all copyright laws as they currently exist. No portion of this material may be reproduced, in any form or by any means, without permission in writing from the publisher.

***12–192.** The boat moves along a path defined by $r^2 = [10(10^3)\cos 2\theta]\,\text{ft}^2$, where θ is in radians. If $\theta = (0.4t^2)$ rad, where t is in seconds, determine the radial and transverse components of the boat's velocity and acceleration at the instant $t = 1$ s.

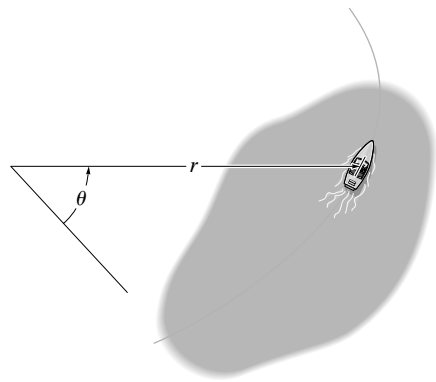

Time Derivatives: Here, $\theta = 0.4t^2$, $\dot{\theta} = 0.8\,t$ and $\ddot{\theta} = 0.8\ \text{rad/s}^2$. When $t = 1$ s, $\theta = 0.4\left(1^2\right) = 0.4$ rad and $\dot{\theta} = 0.8\,(1) = 0.8$ rad/s.

$$r^2 = 10\left(10^3\right)\cos 2\theta \qquad r = 100\sqrt{\cos 2\theta}$$

$$2r\dot{r} = -20\left(10^3\right)\sin 2\theta\dot{\theta} \qquad \dot{r} = -\frac{10(10^2)\sin 2\theta}{r}\dot{\theta}$$

$$2r\ddot{r} + 2\dot{r}^2 = -20\left(10^3\right)\left(2\cos 2\theta\dot{\theta}^2 + \sin 2\theta\ddot{\theta}\right)$$

$$\ddot{r} = \frac{-10(10^3)\left(2\cos 2\theta\dot{\theta}^2 + \sin 2\theta\ddot{\theta}\right) - \dot{r}^2}{r}$$

At $\theta = 0.4$ rad, $r = 100\sqrt{\cos 0.8} = 83.47$ ft, $\dot{r} = -\dfrac{10(10^3)\sin 0.8}{83.47}(0.8) = -68.75$ ft/s

and $\ddot{r} = \dfrac{-10(10^3)\left[2\cos 0.8(0.8^2) + \sin 0.8(0.8)\right] - (-68.75)^2}{83.47} = -232.23\ \text{ft/s}^2$.

Velocity: Applying Eq. 12–25, we have

$$v_r = \dot{r} = -68.8\ \text{ft/s} \qquad \textbf{Ans.}$$

$$v_\theta = r\dot{\theta} = 83.47(0.8) = 66.8\ \text{ft/s} \qquad \textbf{Ans.}$$

Acceleration: Applying Eq. 12–29, we have

$$a_r = \ddot{r} - r\dot{\theta}^2 = -232.23 - 83.47\left(0.8^2\right) = -286\ \text{ft/s}^2 \qquad \textbf{Ans.}$$

$$a_\theta = r\ddot{\theta} + 2\dot{r}\dot{\theta} = 83.47(0.8) + 2(-68.75)(0.8) = -43.2\ \text{ft/s}^2 \qquad \textbf{Ans.}$$

•12–193. A car travels along a road, which for a short distance is defined by $r = (200/\theta)$ ft, where θ is in radians. If it maintains a constant speed of $v = 35$ ft/s, determine the radial and transverse components of its velocity when $\theta = \pi/3$ rad.

$$r = \left.\frac{200}{\theta}\right|_{\theta=\pi/3\ \text{rad}} = \frac{600}{\pi}\ \text{ft}$$

$$\dot{r} = -\left.\frac{200}{\theta^2}\dot{\theta}\right|_{\theta=\pi/3\ \text{rad}} = -\frac{1800}{\pi^2}\dot{\theta}$$

$$v_r = \dot{r} = -\frac{1800}{\pi^2}\dot{\theta} \qquad v_\theta = r\dot{\theta} = \frac{600}{\pi}\dot{\theta}$$

$$v^2 = v_r^2 + v_\theta^2$$

$$35^2 = \left(-\frac{1800}{\pi^2}\dot{\theta}\right)^2 + \left(\frac{600}{\pi}\dot{\theta}\right)^2$$

$$\theta = 0.1325\ \text{rad/s}$$

$$v_r = -\frac{1800}{\pi^2}(0.1325) = -24.2\ \text{ft/s} \qquad \textbf{Ans.}$$

$$v_\theta = \frac{600}{\pi}(0.1325) = 25.3\ \text{ft/s} \qquad \textbf{Ans.}$$

© 2010 Pearson Education, Inc., Upper Saddle River, NJ. All rights reserved. This material is protected under all copyright laws as they currently exist. No portion of this material may be reproduced, in any form or by any means, without permission in writing from the publisher.

12–194. For a short time the jet plane moves along a path in the shape of a lemniscate, $r^2 = (2500 \cos 2\theta)\ \text{km}^2$. At the instant $\theta = 30°$, the radar tracking device is rotating at $\dot{\theta} = 5(10^{-3})$ rad/s with $\ddot{\theta} = 2(10^{-3})$ rad/s^2. Determine the radial and transverse components of velocity and acceleration of the plane at this instant.

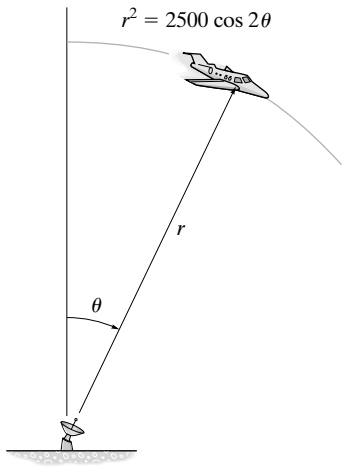

Time Derivatives: Here, $\dot{\theta} = 5(10^{-3})$ rad/s and $\ddot{\theta} = 2(10^{-3})$ rad/s^2.

$$r^2 = 2500 \cos 2\theta \qquad r = 50\sqrt{\cos 2\theta}$$

$$2r\dot{r} = -5000 \sin 2\theta\dot{\theta} \qquad \dot{r} = -\frac{2500 \sin 2\theta}{r}\dot{\theta}$$

$$2r\ddot{r} + 2\dot{r}^2 = -5000\left(2 \cos 2\theta\dot{\theta}^2 + \sin 2\theta\ddot{\theta}\right)$$

$$\ddot{r} = \frac{-2500(2 \cos 2\theta\dot{\theta}^2 + \sin 2\theta\ddot{\theta}) - \dot{r}^2}{r}$$

At $\theta = 30°$, $r = 50\sqrt{\cos 60°} = 35.36$ km, $\dot{r} = -\dfrac{2500 \sin 60°}{35.36}\left[5\left(10^{-3}\right)\right] = -0.3062$ km/s

and $\ddot{r} = \dfrac{-2500\{2 \cos 60°\left[5(10^{-3})\right]^2 + \sin 60°\left[2(10^{-3})\right]\} - (-0.3062)^2}{35.36} = -0.1269$ km/s^2.

Velocity: Applying Eq. 12–25, we have

$$v_r = \dot{r} = -0.3062 \text{ km/s} = 306 \text{ m/s} \qquad \textbf{Ans.}$$

$$v_\theta = r\dot{\theta} = 35.36\left[5\left(10^{-3}\right)\right] = 0.1768 \text{ km/s} = 177 \text{ m/s} \qquad \textbf{Ans.}$$

Acceleration: Applying Eq. 12–29, we have

$$a_r = \ddot{r} - r\dot{\theta}^2 = -0.1269 - 35.36\left[5\left(10^{-3}\right)\right]^2$$

$$= -0.1278 \text{ km/s}^2 = -128 \text{ m/s}^2 \qquad \textbf{Ans.}$$

$$a_\theta = r\ddot{\theta} + 2\dot{r}\dot{\theta} = 35.36\left[2\left(10^{-3}\right)\right] + 2(-0.3062)\left[5\left(10^{-3}\right)\right]$$

$$= 0.06765 \text{ km/s}^2 = 67.7 \text{ m/s}^2 \qquad \textbf{Ans.}$$

© 2010 Pearson Education, Inc., Upper Saddle River, NJ. All rights reserved. This material is protected under all copyright laws as they currently exist. No portion of this material may be reproduced, in any form or by any means, without permission in writing from the publisher.

12–195. The mine car C is being pulled up the incline using the motor M and the rope-and-pulley arrangement shown. Determine the speed v_P at which a point P on the cable must be traveling toward the motor to move the car up the plane with a constant speed of $v = 2$ m/s.

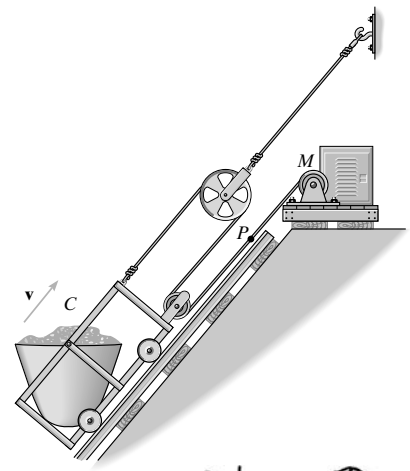

$2s_C + (s_C - s_P) = l$

Thus,

$3v_C - v_P = 0$

Hence,

$v_P = 3(-2) = -6 \text{ m/s} = 6 \text{ m/s} \nearrow$ **Ans.**

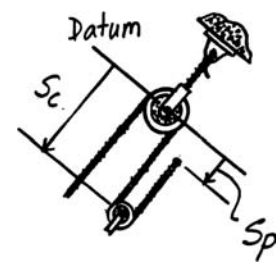

***12–196.** Determine the displacement of the log if the truck at C pulls the cable 4 ft to the right.

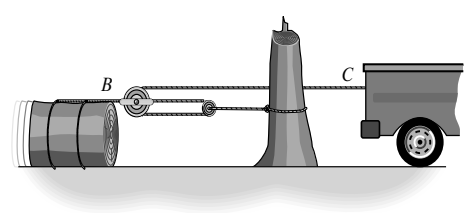

$2s_B + (s_B - s_C) = l$

$3s_B - s_C = l$

$3\Delta s_B - \Delta s_C = 0$

Since $\Delta s_C = -4$, then

$3\Delta s_B = -4$

$\Delta s_B = -1.33 \text{ ft} = 1.33 \text{ ft} \rightarrow$ **Ans.**

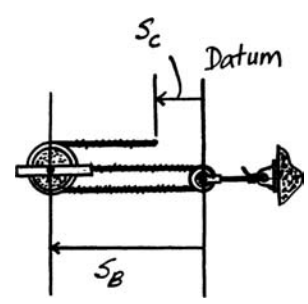

•12–197. If the hydraulic cylinder H draws in rod BC at 2 ft/s, determine the speed of slider A.

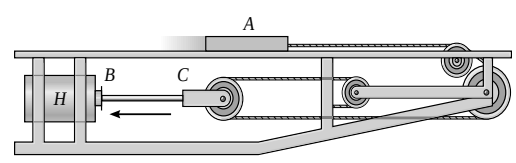

$2s_H + s_A = l$

$2v_H = -v_A$

$2(2) = -v_A$

$v_A = -4 \text{ ft/s} = 4 \text{ ft/s} \leftarrow$ **Ans.**

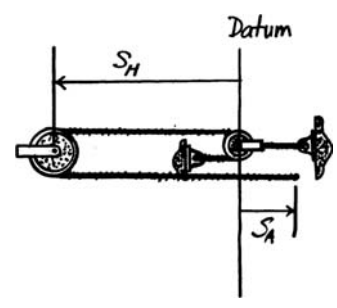

© 2010 Pearson Education, Inc., Upper Saddle River, NJ. All rights reserved. This material is protected under all copyright laws as they currently exist. No portion of this material may be reproduced, in any form or by any means, without permission in writing from the publisher.

12–198. If end A of the rope moves downward with a speed of 5 m/s, determine the speed of cylinder B.

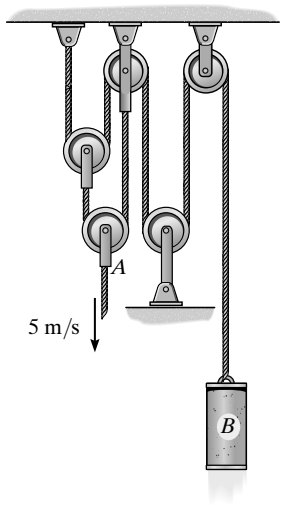

Position Coordinates: By referring to Fig. a, the length of the two ropes written in terms of the position coordinates s_A, s_B, and s_C are

$$s_B + 2a + 2s_C = l_1$$

$$s_B + 2s_C = l_1 - 2a \qquad \textbf{(1)}$$

and

$$s_A + (s_A - s_C) = l_2$$

$$2s_A - s_C = l_2 \qquad \textbf{(2)}$$

Eliminating s_C from Eqs. (1) and (2) yields

$$s_B + 4s_A = l_1 - 2a + 2l_2$$

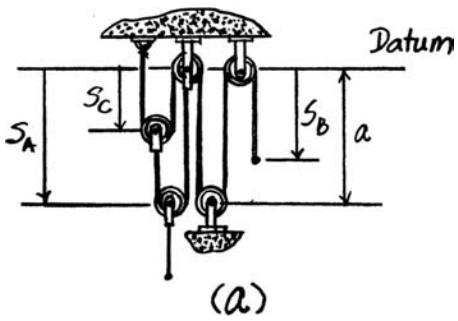

Time Derivative: Taking the time derivative of the above equation,

$$(+\downarrow) \qquad v_B + 4v_A = 0$$

Here, $v_A = 5$ m/s. Thus,

$$v_B + 4(5) = 0$$

$$v_B = -20 \text{ m/s} = 20 \text{ m/s} \uparrow \qquad \textbf{Ans.}$$

12–199. Determine the speed of the elevator if each motor draws in the cable with a constant speed of 5 m/s.

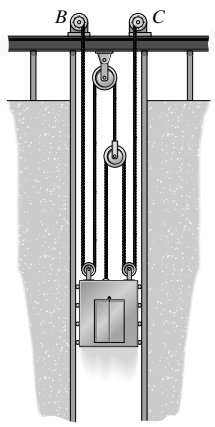

Position Coordinates: By referring to Fig. a, the length of the two cables written in terms of the position coordinates are

$$s_E + (s_E - s_A) + s_C = l_1$$

$$2s_E - s_A + s_C = l_1 \qquad \textbf{(1)}$$

and

$$(s_E - s_B) + 2(s_E - s_C) = l_2$$

$$3s_E - s_B - 2s_C = l_2 \qquad \textbf{(2)}$$

Eliminating s_C from Eqs. (1) and (2) yields

$$7s_E - 2s_A - s_B = 2l_1 + l_2$$

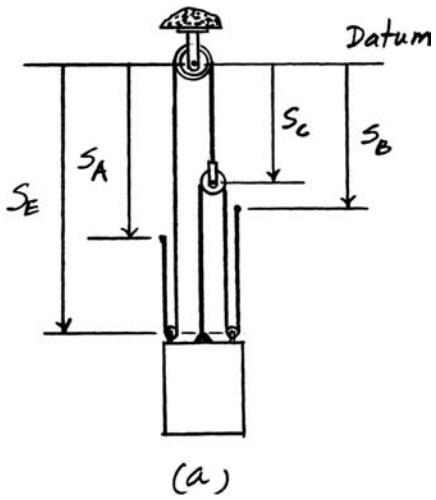

Time Derivative: Taking the time derivative of the above equation,

$$(+\downarrow) \qquad 7v_E - 2v_A - v_B = 0$$

Here, $v_A = v_B = -5$ m/s. Thus,

$$7v_E - [2(-5)] - (-5) = 0$$

$$v_E = -2.14 \text{ m/s} = 2.14 \text{ m/s} \uparrow \qquad \textbf{Ans.}$$

© 2010 Pearson Education, Inc., Upper Saddle River, NJ. All rights reserved. This material is protected under all copyright laws as they currently exist. No portion of this material may be reproduced, in any form or by any means, without permission in writing from the publisher.

***12–200.** Determine the speed of cylinder A, if the rope is drawn towards the motor M at a constant rate of 10 m/s.

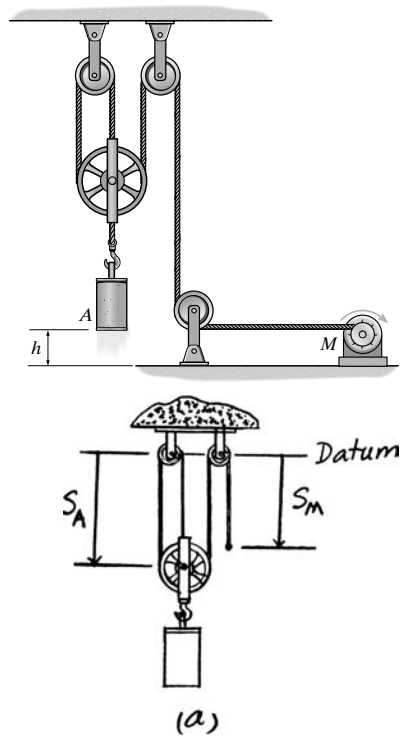

Position Coordinates: By referring to Fig. a, the length of the rope written in terms of the position coordinates s_A and s_M is

$$3s_A + s_M = l$$

Time Derivative: Taking the time derivative of the above equation,

$$(+\downarrow) \qquad 3v_A + v_M = 0$$

Here, $v_M = 10$ m/s. Thus,

$$3v_A + 10 = 0$$

$$v_A = -3.33 \text{ m/s} = 3.33 \text{ m/s} \uparrow \qquad \textbf{Ans.}$$

•12–201. If the rope is drawn towards the motor M at a speed of $v_M = (5t^{3/2})$ m/s, where t is in seconds, determine the speed of cylinder A when $t = 1$ s.

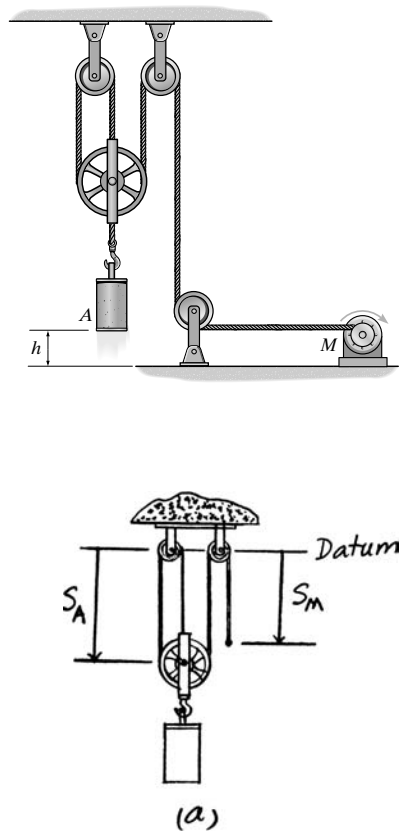

Position Coordinates: By referring to Fig. a, the length of the rope written in terms of the position coordinates s_A and s_M is

$$3s_A + s_M = l$$

Time Derivative: Taking the time derivative of the above equation,

$$(+\downarrow) \qquad 3v_A + v_M = 0$$

Here, $v_M = \left(5t^{3/2}\right)$ m/s. Thus,

$$3v_A + 5t^{3/2} = 0$$

$$v_A = \left(-\frac{5}{3}t^{3/2}\right) \text{m/s} = \left(\frac{5}{3}t^{3/2}\right) \text{m/s}\Big|_{t=1\text{ s}} = 1.67 \text{ m/s} \uparrow \qquad \textbf{Ans.}$$

© 2010 Pearson Education, Inc., Upper Saddle River, NJ. All rights reserved. This material is protected under all copyright laws as they currently exist. No portion of this material may be reproduced, in any form or by any means, without permission in writing from the publisher.

12–202. If the end of the cable at A is pulled down with a speed of 2 m/s, determine the speed at which block B rises.

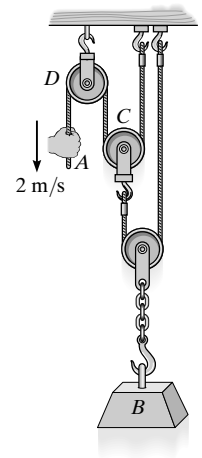

Position-Coordinate Equation: Datum is established at fixed pulley D. The position of point A, block B and pulley C with respect to datum are s_A, s_B and s_C, respectively. Since the system consists of two cords, two position-coordinate equations can be developed.

$$2s_C + s_A = l_1 \qquad \textbf{[1]}$$

$$s_B + (s_B - s_C) = l_2 \qquad \textbf{[2]}$$

Eliminating s_C from Eqs. [1] and [2] yields

$$s_A + 4s_B = l_1 + 2l_2$$

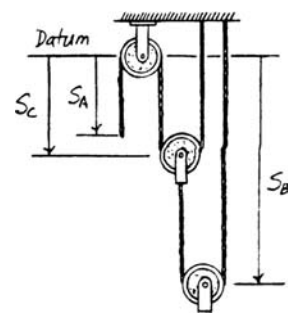

Time Derivative: Taking the time derivative of the above equation yields

$$v_A + 4v_B = 0 \qquad \textbf{[3]}$$

Since $v_A = 2$ m/s, from Eq. [3]

$$(+\downarrow) \qquad 2 + 4v_B = 0$$

$$v_B = -0.5 \text{ m/s} = 0.5 \text{ m/s} \uparrow \qquad \textbf{Ans.}$$

12–203. Determine the speed of B if A is moving downwards with a speed of $v_A = 4$ m/s at the instant shown.

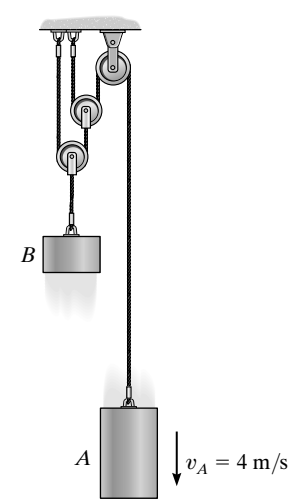

Position Coordinates: By referring to Fig. a, the length of the two ropes written in terms of the position coordinates s_A, s_B, and s_C are

$$s_A + 2s_C = l_1 \qquad \textbf{(1)}$$

and

$$s_B + (s_B - s_C) = l_2 \qquad \textbf{(2)}$$

Eliminating s_C from Eqs. (1) and (2),

$$4s_B + s_A = 2l_2 + l_1 \qquad \textbf{(3)}$$

Time Derivative: Taking the time derivative of Eq. (3),

$$(+\downarrow) \qquad 4v_B + v_A = 0$$

Here, $v_A = 4$ m/s. Thus,

$$4v_B + 4 = 0$$

$$v_B = -1 \text{ m/s} = 1 \text{ m/s} \uparrow \qquad \textbf{Ans.}$$

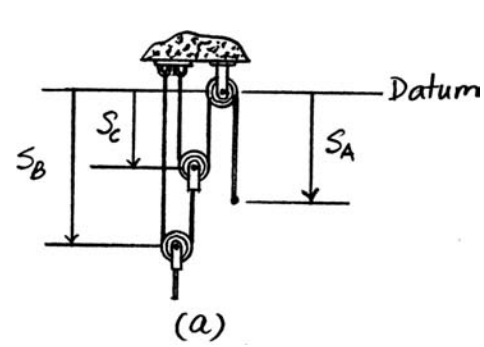

(a)

© 2010 Pearson Education, Inc., Upper Saddle River, NJ. All rights reserved. This material is protected under all copyright laws as they currently exist. No portion of this material may be reproduced, in any form or by any means, without permission in writing from the publisher.

***12–204.** The crane is used to hoist the load. If the motors at A and B are drawing in the cable at a speed of 2 ft/s and 4 ft/s, respectively, determine the speed of the load.

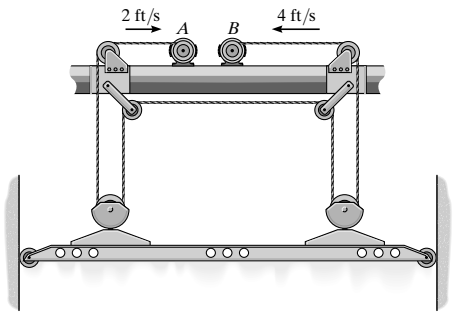

Position-Coordinate Equation: Datum is established as shown. The positon of point A and B and load C with respect to datum are s_A, s_B and s_C, respectively.

$$4s_C + s_A + s_B + 2h = l$$

Time Derivative: Since h is a constant, taking the time derivative of the above equation yields

$$4v_C + v_A + v_B = 0 \qquad \textbf{[1]}$$

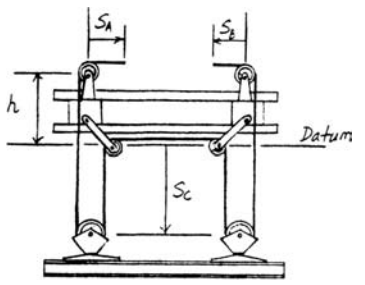

Since $v_A = 2$ ft/s and $v_B = 4$ ft/s, from Eq. [1]

$$4v_C + 2 + 4 = 0$$

$$v_C = -1.50 \text{ ft/s} = 1.50 \text{ ft/s} \uparrow \qquad \textbf{Ans.}$$

•12–205. The cable at B is pulled downwards at 4 ft/s, and the speed is decreasing at 2 ft/s^2. Determine the velocity and acceleration of block A at this instant.

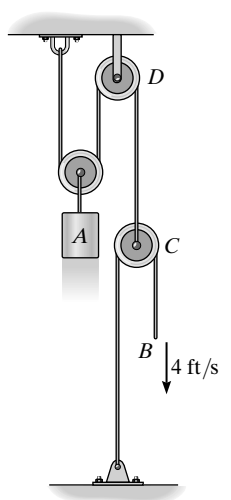

$$2s_A + (h - s_C) = l$$

$$2v_A = v_C$$

$$s_C + (s_C - s_B) = l$$

$$2v_C = v_B$$

$$v_B = 4v_A$$

$$a_B = 4a_A$$

Thus,

$$-4 = 4v_A$$

$$v_A = -1 \text{ ft/s} = 1 \text{ ft/s} \uparrow \qquad \textbf{Ans.}$$

$$2 = 4a_A$$

$$a_A = 0.5 \text{ ft/s} = 0.5 \text{ ft/s}^2 \downarrow \qquad \textbf{Ans.}$$

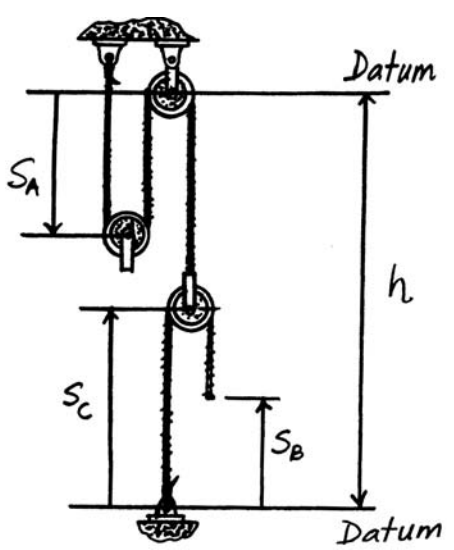

© 2010 Pearson Education, Inc., Upper Saddle River, NJ. All rights reserved. This material is protected under all copyright laws as they currently exist. No portion of this material may be reproduced, in any form or by any means, without permission in writing from the publisher.

12–206. If block A is moving downward with a speed of 4 ft/s while C is moving up at 2 ft/s, determine the speed of block B.

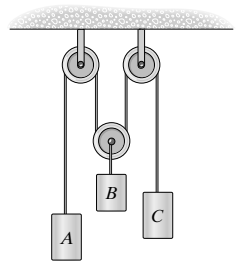

$s_A + 2s_B + s_C = l$

$v_A + 2v_B + v_C = 0$

$4 + 2v_B - 2 = 0$

$v_B = -1 \text{ ft/s} = 1 \text{ ft/s} \uparrow$ **Ans.**

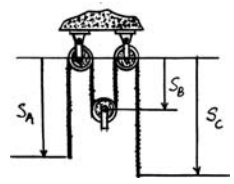

12–207. If block A is moving downward at 6 ft/s while block C is moving down at 18 ft/s, determine the speed of block B.

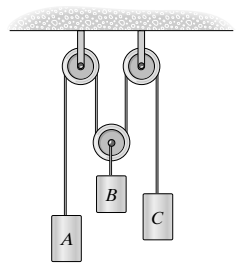

$s_A = 2s_B + s_C = l$

$v_A = 2v_B + v_C = 0$

$6 + 2v_B + 18 = 0$

$v_B = -12 \text{ ft/s} = 12 \text{ ft/s} \uparrow$ **Ans.**

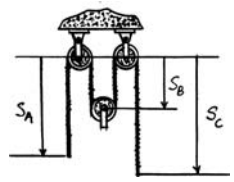

***12–208.** If the end of the cable at A is pulled down with a speed of 2 m/s, determine the speed at which block E rises.

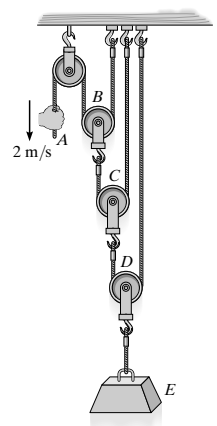

Position-Coordinate Equation: Datum is established at fixed pulley. The position of point A, pulley B and C and block E with respect to datum are s_A, s_B, s_C and s_E, respectively. Since the system consists of three cords, three position-coordinate equations can be developed.

$$2s_B + s_A = l_1 \qquad \textbf{[1]}$$

$$s_C + (s_C - s_B) = l_2 \qquad \textbf{[2]}$$

$$s_E + (s_E - s_C) = l_3 \qquad \textbf{[3]}$$

Eliminating s_C and s_B from Eqs. [1], [2] and [3], we have

$$s_A + 8s_E = l_1 + 2l_2 + 4l_3$$

Time Derivative: Taking the time derivative of the above equation yields

$$v_A + 8v_E = 0 \qquad \textbf{[4]}$$

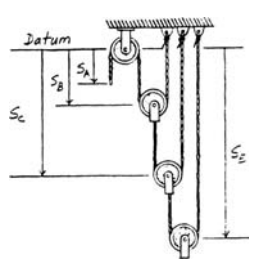

Since $v_A = 2$ m/s, from Eq. [3]

$$(+\downarrow) \qquad 2 + 8v_E = 0$$

$$v_E = -0.250 \text{ m/s} = 0.250 \text{ m/s} \uparrow \qquad \textbf{Ans.}$$

© 2010 Pearson Education, Inc., Upper Saddle River, NJ. All rights reserved. This material is protected under all copyright laws as they currently exist. No portion of this material may be reproduced, in any form or by any means, without permission in writing from the publisher.

•12–209. If motors at A and B draw in their attached cables with an acceleration of $a = (0.2t)$ m/s^2, where t is in seconds, determine the speed of the block when it reaches a height of $h = 4$ m, starting from rest at $h = 0$. Also, how much time does it take to reach this height?

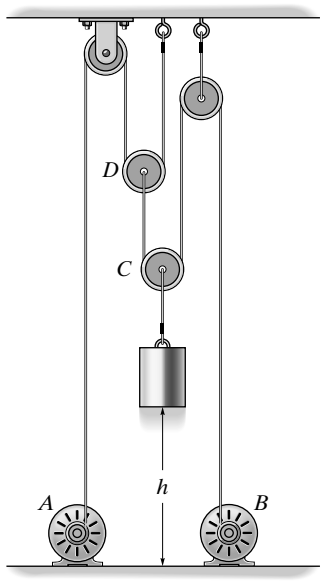

$s_A + 2s_D = l$

$(s_C - s_D) + s_C + s_B = l'$

$\Delta s_A = -2\Delta s_D \qquad 2\Delta s_C - \Delta s_D + \Delta s_B = 0$

If $\Delta s_C = -4$ and $\Delta s_A = \Delta s_B$, then,

$\Delta s_A = -2\Delta s_D \qquad 2(-4) - \Delta s_D + \Delta s_A = 0$

$\Delta s_D = -2.67 \text{ m} \qquad \Delta s_A = \Delta s_B = 5.33 \text{ m}$

Thus,

$v_A = -2v_D$ **(1)**

$2v_C - v_D + v_B = 0$ **(2)**

$a = 0.2t$

$dv = a\,dt$

$\int_0^v dv = \int_0^t 0.2t\,dt$

$v = 0.1t^2$

$ds = v\,dt$

$\int_0^s ds = \int_0^t 0.1t^2\,dt$

$s = \frac{0.1}{3}t^3 = 5.33$

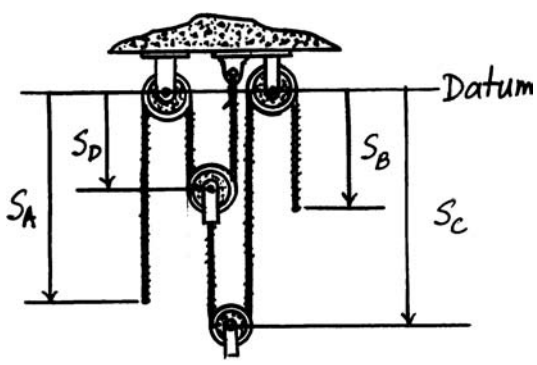

$t = 5.428 \text{ s} = 5.43 \text{ s}$ **Ans.**

$v = 0.1(5.428)^2 = 2.947 \text{ m/s}$

$v_A = v_B = 2.947 \text{ m/s}$

Thus, from Eqs. (1) and (2):

$2.947 = -2v_D$

$v_D = -1.474$

$2v_C - (-1.474) + 2.947 = 0$

$v_C = -2.21 \text{ m/s} = 2.21 \text{ m/s} \uparrow$ **Ans.**

© 2010 Pearson Education, Inc., Upper Saddle River, NJ. All rights reserved. This material is protected under all copyright laws as they currently exist. No portion of this material may be reproduced, in any form or by any means, without permission in writing from the publisher.

12–210. The motor at C pulls in the cable with an acceleration $a_C = (3t^2)$ m/s^2, where t is in seconds. The motor at D draws in its cable at $a_D = 5$ m/s^2. If both motors start at the same instant from rest when $d = 3$ m, determine (a) the time needed for $d = 0$, and (b) the velocities of blocks A and B when this occurs.

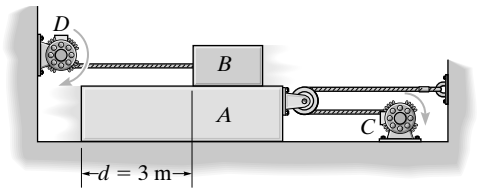

For A:

$s_A + (s_A - s_C) = l$

$2v_A = v_C$

$2a_A = a_C = -3t^2$

$a_A = -1.5t^2 = 1.5t^2 \rightarrow$

$v_A = 0.5t^3 \rightarrow$

$s_A = 0.125t^4 \rightarrow$

For B:

$a_B = 5 \text{ m/s}^2 \leftarrow$

$v_B = 5t \leftarrow$

$s_B = 2.5t^2 \leftarrow$

Require $s_A + s_B = d$

$0.125t^4 + 2.5t^2 = 3$

Set $u = t^2$ $\quad 0.125u^2 + 2.5u = 3$

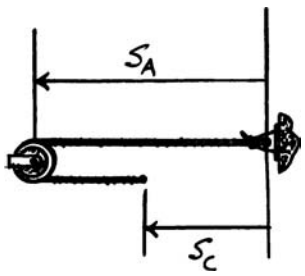

The positive root is $u = 1.1355$. Thus,

$$t = 1.0656 = 1.07 \text{ s} \qquad \textbf{Ans.}$$

$$v_A = .0.5(1.0656)^2 = 0.605 \text{ m/s} \qquad \textbf{Ans.}$$

$$v_B = 5(1.0656) = 5.33 \text{ m/s} \qquad \textbf{Ans.}$$

© 2010 Pearson Education, Inc., Upper Saddle River, NJ. All rights reserved. This material is protected under all copyright laws as they currently exist. No portion of this material may be reproduced, in any form or by any means, without permission in writing from the publisher.

12–211. The motion of the collar at A is controlled by a motor at B such that when the collar is at $s_A = 3$ ft it is moving upwards at 2 ft/s and decreasing at 1 ft/s^2. Determine the velocity and acceleration of a point on the cable as it is drawn into the motor B at this instant.

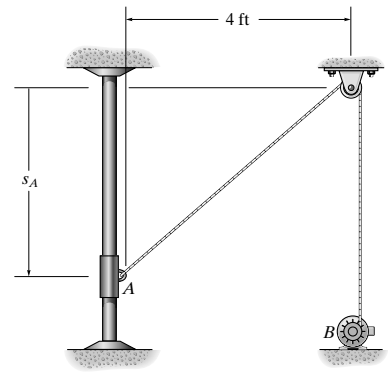

$$\sqrt{s_A^2 + 4^2} + s_B = l$$

$$\frac{1}{2}\left(s_A^2 + 16\right)^{-\frac{1}{2}}(2s_A)\dot{s}_A + s_B = 0$$

$$\dot{s}_B = -s_A\dot{s}_A\left(s_A^2 + 16\right)^{-\frac{1}{2}}$$

$$\dot{s}_B = -\left[\left(\dot{s}_A\right)^2\left(s_A^2 + 16\right)^{-\frac{1}{2}} + s_A\ddot{s}_A\left(s_A^2 + 16\right)^{-\frac{1}{2}} + s_A\dot{s}_A\left(-\frac{1}{2}\right)\left(s_A^2 + 16\right)^{-\frac{3}{2}}\left(2s_A\dot{s}_A\right)\right]$$

$$\dot{s}_B = \frac{\left(s_A\dot{s}_A\right)^2}{\left(s_A^2 + 16\right)^{\frac{3}{2}}} - \frac{\left(s_A\right)^2 + s_A\ddot{s}_A}{\left(s_A^2 + 16\right)^{\frac{1}{2}}}$$

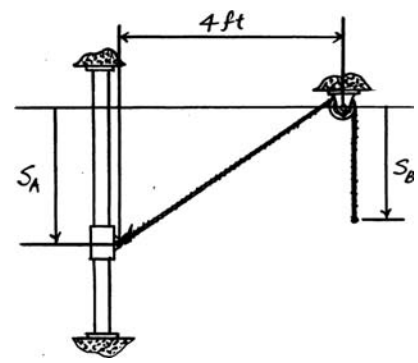

Evaluating these equations:

$$s_B = -3(-2)\left((3)^2 + 16\right)^{-\frac{1}{2}} = 1.20 \text{ ft/s} \downarrow \qquad \textbf{Ans.}$$

$$s_B = \frac{((3)(-2))^2}{((3)^2 + 16)^{\frac{3}{2}}} - \frac{(-2)^2 + 3(1)}{((3)^2 + 16)^{\frac{1}{2}}} = -1.11 \text{ ft/s}^2 = 1.11 \text{ ft/s}^2 \uparrow \qquad \textbf{Ans.}$$

***12–212.** The man pulls the boy up to the tree limb C by walking backward at a constant speed of 1.5 m/s. Determine the speed at which the boy is being lifted at the instant $x_A = 4$ m. Neglect the size of the limb. When $x_A = 0$, $y_B = 8$ m, so that A and B are coincident, i.e., the rope is 16 m long.

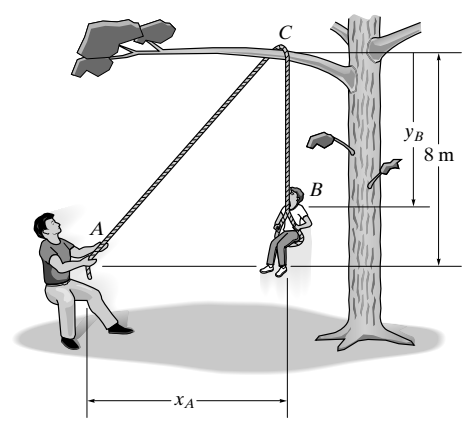

Position-Coordinate Equation: Using the Pythagorean theorem to determine l_{AC}, we have $l_{AC} = \sqrt{x_A^2 + 8^2}$. Thus,

$$l = l_{AC} + y_B$$

$$16 = \sqrt{x_A^2 + 8^2} + y_B$$

$$y_B = 16 - \sqrt{x_A^2 + 64} \qquad \textbf{[1]}$$

Time Derivative: Taking the time derivative of Eq. [1] and realizing that $v_A = \dfrac{dx_A}{dt}$ and $v_B = \dfrac{dy_B}{dt}$, we have

$$v_B = \frac{dy_B}{dt} = -\frac{x_A}{\sqrt{x_A^2 + 64}}\frac{dx_A}{dt}$$

$$v_B = -\frac{x_A}{\sqrt{x_A^2 + 64}}v_A \qquad \textbf{[2]}$$

At the instant $x_A = 4$ m, from Eq. [2]

$$v_B = -\frac{4}{\sqrt{4^2 + 64}}(1.5) = -0.671 \text{ m/s} = 0.671 \text{ m/s} \uparrow \qquad \textbf{Ans.}$$

Note: The negative sign indicates that velocity v_B is in the opposite direction to that of positive y_B.

© 2010 Pearson Education, Inc., Upper Saddle River, NJ. All rights reserved. This material is protected under all copyright laws as they currently exist. No portion of this material may be reproduced, in any form or by any means, without permission in writing from the publisher.

•12–213. The man pulls the boy up to the tree limb C by walking backward. If he starts from rest when $x_A = 0$ and moves backward with a constant acceleration $a_A = 0.2\ \text{m/s}^2$, determine the speed of the boy at the instant $y_B = 4$ m. Neglect the size of the limb. When $x_A = 0$, $y_B = 8$ m, so that A and B are coincident, i.e., the rope is 16 m long.

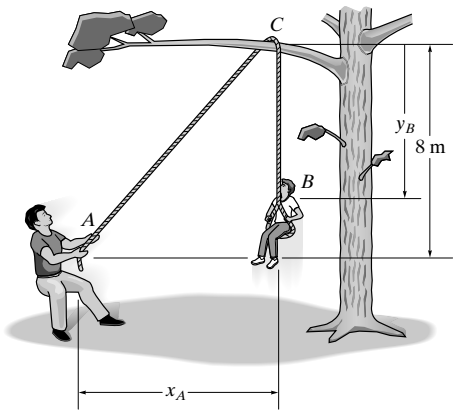

Position-Coordinate Equation: Using the Pythagorean theorem to determine l_{AC}, we have $l_{AC} = \sqrt{x_A^2 + 8^2}$. Thus,

$$l = l_{AC} + y_B$$

$$16 = \sqrt{x_A^2 + 8^2} + y_B$$

$$y_B = 16 - \sqrt{x_A^2 + 64} \qquad \textbf{[1]}$$

Time Derivative: Taking the time derivative of Eq. [1] Where $v_A = \dfrac{dx_A}{dt}$ and $v_B = \dfrac{dy_B}{dt}$, we have

$$v_B = \frac{dy_B}{dt} = -\frac{x_A}{\sqrt{x_A^2 + 64}}\frac{dx_A}{dt}$$

$$v_B = -\frac{x_A}{\sqrt{x_A^2 + 64}}v_A \qquad \textbf{[2]}$$

At the instant $y_B = 4$ m, from Eq. [1], $4 = 16 - \sqrt{x_A^2 + 64}$, $x_A = 8.944$ m. The velocity of the man at that instant can be obtained.

$$v_A^2 = (v_0)_A^2 + 2(a_c)_A\left[s_A - (s_0)_A\right]$$

$$v_A^2 = 0 + 2(0.2)(8.944 - 0)$$

$$v_A = 1.891\ \text{m/s}$$

Substitute the above results into Eq. [2] yields

$$v_B = -\frac{8.944}{\sqrt{8.944^2 + 64}}(1.891) = -1.41\ \text{m/s} = 1.41\ \text{m/s}\uparrow \qquad \textbf{Ans.}$$

Note: The negative sign indicates that velocity v_B is in the opposite direction to that of positive y_B.

© 2010 Pearson Education, Inc., Upper Saddle River, NJ. All rights reserved. This material is protected under all copyright laws as they currently exist. No portion of this material may be reproduced, in any form or by any means, without permission in writing from the publisher.

12–214. If the truck travels at a constant speed of $v_T = 6$ ft/s, determine the speed of the crate for any angle θ of the rope. The rope has a length of 100 ft and passes over a pulley of negligible size at A. *Hint:* Relate the coordinates x_T and x_C to the length of the rope and take the time derivative. Then substitute the trigonometric relation between x_C and θ.

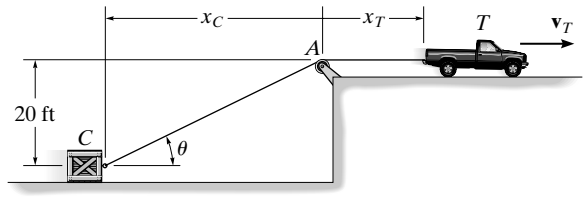

$$\sqrt{(20)^2 + x_C^2} + x_T = l = 100$$

$$\frac{1}{2}\left((20)^2 + (x_C)^2\right)^{-\frac{1}{2}}\left(2x_C\dot{x}_C\right) + \dot{x}_T = 0$$

Since $\dot{x}_T = v_T = 6$ ft/s, $v_C = \dot{x}_C$, and

$$x_C = 20 \operatorname{ctn} \theta$$

Then,

$$\frac{(20 \operatorname{ctn} \theta)v_C}{(400 + 400 \operatorname{ctn}^2 \theta)^{\frac{1}{2}}} = -6$$

Since $1 + \operatorname{ctn}^2 \theta = \csc^2 \theta$,

$$\left(\frac{\operatorname{ctn} \theta}{\csc \theta}\right)v_C = \cos \theta v_C = -6$$

$$v_C = -6 \sec \theta = (6 \sec \theta) \text{ ft/s} \rightarrow \qquad \textbf{Ans.}$$

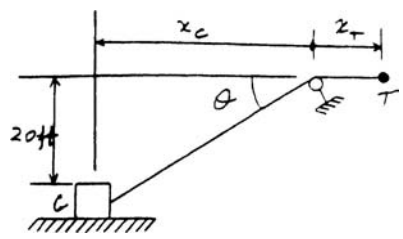

12–215. At the instant shown, car A travels along the straight portion of the road with a speed of 25 m/s. At this same instant car B travels along the circular portion of the road with a speed of 15 m/s. Determine the velocity of car B relative to car A.

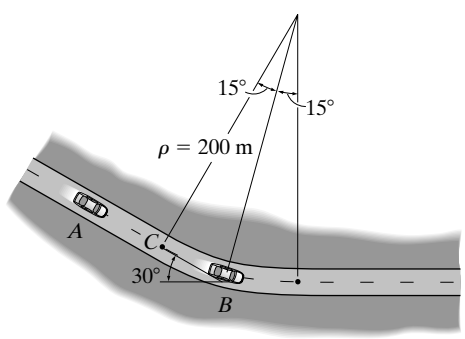

Velocity: Referring to Fig. a, the velocity of cars A and B expressed in Cartesian vector form are

$$\mathbf{v}_A = [25 \cos 30° \,\mathbf{i} - 25 \sin 30° \,\mathbf{j}] \text{ m/s} = [21.65\mathbf{i} - 12.5\mathbf{j}] \text{ m/s}$$

$$\mathbf{v}_B = [15 \cos 15° \,\mathbf{i} - 15 \sin 15° \,\mathbf{j}] \text{ m/s} = [14.49\mathbf{i} - 3.882\mathbf{j}] \text{ m/s}$$

Applying the relative velocity equation,

$$\mathbf{v}_B = \mathbf{v}_A + \mathbf{v}_{B/A}$$

$$14.49\mathbf{i} - 3.882\mathbf{j} = 21.65\mathbf{i} - 12.5\mathbf{j} + \mathbf{v}_{B/A}$$

$$\mathbf{v}_{B/A} = [-7.162\mathbf{i} + 8.618\mathbf{j}] \text{ m/s}$$

Thus, the magnitude of $\mathbf{v}_{B/A}$ is given by

$$v_{B/A} = \sqrt{(-7.162)^2 + 8.618^2} = 11.2 \text{ m/s} \qquad \textbf{Ans.}$$

The direction angle θ_v of $\mathbf{v}_{B/A}$ measured from the x axis, Fig. a is

$$\theta_v = \tan^{-1}\left(\frac{8.618}{7.162}\right) = 50.3° \qquad \textbf{Ans.}$$

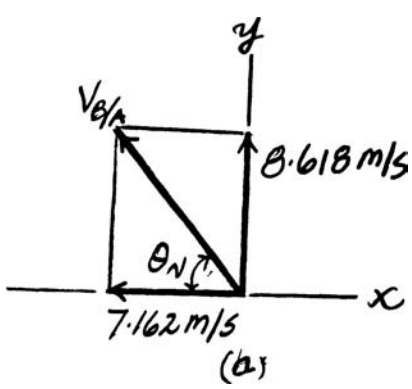

© 2010 Pearson Education, Inc., Upper Saddle River, NJ. All rights reserved. This material is protected under all copyright laws as they currently exist. No portion of this material may be reproduced, in any form or by any means, without permission in writing from the publisher.

***12–216.** Car A travels along a straight road at a speed of 25 m/s while accelerating at 1.5 m/s^2. At this same instant car C is traveling along the straight road with a speed of 30 m/s while decelerating at 3 m/s^2. Determine the velocity and acceleration of car A relative to car C.

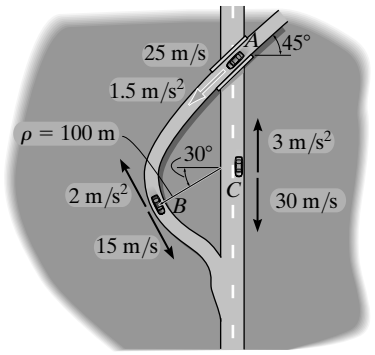

Velocity: The velocity of cars A and B expressed in Cartesian vector form are

$$\mathbf{v}_A = [-25\cos 45°\mathbf{i} - 25\sin 45°\mathbf{j}]\text{ m/s} = [-17.68\mathbf{i} - 17.68\mathbf{j}]\text{ m/s}$$

$$\mathbf{v}_C = [-30\mathbf{j}]\text{ m/s}$$

Applying the relative velocity equation, we have

$$\mathbf{v}_A = \mathbf{v}_C + \mathbf{v}_{A/C}$$

$$-17.68\mathbf{i} - 17.68\mathbf{j} = -30\mathbf{j} + \mathbf{v}_{A/C}$$

$$\mathbf{v}_{A/C} = [-17.68\mathbf{i} + 12.32\mathbf{j}]\text{ m/s}$$

Thus, the magnitude of $\mathbf{v}_{A/C}$ is given by

$$v_{A/C} = \sqrt{(-17.68)^2 + 12.32^2} = 21.5\text{ m/s} \qquad \textbf{Ans.}$$

and the direction angle θ_v that $\mathbf{v}_{A/C}$ makes with the x axis is

$$\theta_v = \tan^{-1}\left(\frac{12.32}{17.68}\right) = 34.9° \nwarrow \qquad \textbf{Ans.}$$

Acceleration: The acceleration of cars A and B expressed in Cartesian vector form are

$$\mathbf{a}_A = [-1.5\cos 45°\mathbf{i} - 1.5\sin 45°\mathbf{j}]\text{ m/s}^2 = [-1.061\mathbf{i} - 1.061\mathbf{j}]\text{ m/s}^2$$

$$\mathbf{a}_C = [3\mathbf{j}]\text{m/s}^2$$

Applying the relative acceleration equation,

$$\mathbf{a}_A = \mathbf{a}_C + \mathbf{a}_{A/C}$$

$$-1.061\mathbf{i} - 1.061\mathbf{j} = 3\mathbf{j} + \mathbf{a}_{A/C}$$

$$\mathbf{a}_{A/C} = [-1.061\mathbf{i} - 4.061\mathbf{j}]\text{ m/s}^2$$

Thus, the magnitude of $\mathbf{a}_{A/C}$ is given by

$$a_{A/C} = \sqrt{(-1.061)^2 + (-4.061)^2} = 4.20\text{ m/s}^2 \qquad \textbf{Ans.}$$

and the direction angle θ_a that $\mathbf{a}_{A/C}$ makes with the x axis is

$$\theta_a = \tan^{-1}\left(\frac{4.061}{1.061}\right) = 75.4° \swarrow \qquad \textbf{Ans.}$$

© 2010 Pearson Education, Inc., Upper Saddle River, NJ. All rights reserved. This material is protected under all copyright laws as they currently exist. No portion of this material may be reproduced, in any form or by any means, without permission in writing from the publisher.

•12–217. Car B is traveling along the curved road with a speed of 15 m/s while decreasing its speed at 2 m/s^2. At this same instant car C is traveling along the straight road with a speed of 30 m/s while decelerating at 3 m/s^2. Determine the velocity and acceleration of car B relative to car C.

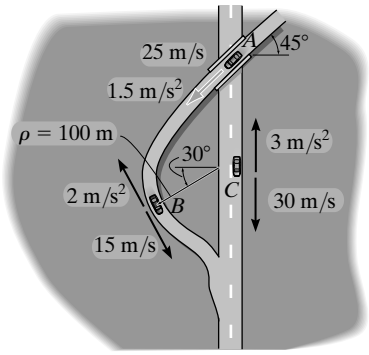

Velocity: The velocity of cars B and C expressed in Cartesian vector form are

$$\mathbf{v}_B = [15\cos 60°\,\mathbf{i} - 15\sin 60°\,\mathbf{j}]\text{ m/s} = [7.5\mathbf{i} - 12.99\mathbf{j}]\text{ m/s}$$

$$\mathbf{v}_C = [-30\mathbf{j}]\text{ m/s}$$

Applying the relative velocity equation,

$$\mathbf{v}_B = \mathbf{v}_C + \mathbf{v}_{B/C}$$

$$7.5\mathbf{i} - 12.99\mathbf{j} = -30\mathbf{j} + \mathbf{v}_{B/C}$$

$$\mathbf{v}_{B/C} = [7.5\mathbf{i} + 17.01\mathbf{j}]\text{ m/s}$$

Thus, the magnitude of $\mathbf{v}_{B/C}$ is given by

$$v_{BC} = \sqrt{7.5^2 + 17.01^2} = 18.6\text{ m/s} \qquad \textbf{Ans.}$$

and the direction angle θ_v that $\mathbf{v}_{B/C}$ makes with the x axis is

$$\theta_v = \tan^{-1}\left(\frac{17.01}{7.5}\right) = 66.2° \qquad \textbf{Ans.}$$

Acceleration: The normal component of car B's acceleration is $(a_B)_n = \frac{{v_B}^2}{\rho} = \frac{15^2}{100} = 2.25\text{ m/s}^2$. Thus, the tangential and normal components of car B's acceleration and the acceleration of car C expressed in Cartesian vector form are

$$(\mathbf{a}_B)_t = [-2\cos 60°\,\mathbf{i} + 2\sin 60°\mathbf{j}] = [-1\mathbf{i} + 1.732\mathbf{j}]\text{ m/s}^2$$

$$(\mathbf{a}_B)_n = [2.25\cos 30°\,\mathbf{i} + 2.25\sin 30°\,\mathbf{j}] = [1.9486\mathbf{i} + 1.125\mathbf{j}]\text{ m/s}^2$$

$$\mathbf{a}_C = [3\mathbf{j}]\text{ m/s}^2$$

Applying the relative acceleration equation,

$$\mathbf{a}_B = \mathbf{a}_C + \mathbf{a}_{B/C}$$

$$(-1\mathbf{i} + 1.732\mathbf{j}) + (1.9486\mathbf{i} + 1.125\mathbf{j}) = 3\mathbf{j} + \mathbf{a}_{B/C}$$

$$\mathbf{a}_{B/C} = [0.9486\mathbf{i} - 0.1429\mathbf{j}]\text{ m/s}^2$$

Thus, the magnitude of $\mathbf{a}_{B/C}$ is given by

$$a_{B/C} = \sqrt{0.9486^2 + (-0.1429)^2} = 0.959\text{ m/s}^2 \qquad \textbf{Ans.}$$

and the direction angle θ_a that $\mathbf{a}_{B/C}$ makes with the x axis is

$$\theta_a = \tan^{-1}\left(\frac{0.1429}{0.9486}\right) = 8.57° \qquad \textbf{Ans.}$$

© 2010 Pearson Education, Inc., Upper Saddle River, NJ. All rights reserved. This material is protected under all copyright laws as they currently exist. No portion of this material may be reproduced, in any form or by any means, without permission in writing from the publisher.

12–218. The ship travels at a constant speed of $v_s = 20$ m/s and the wind is blowing at a speed of $v_w = 10$ m/s, as shown. Determine the magnitude and direction of the horizontal component of velocity of the smoke coming from the smoke stack as it appears to a passenger on the ship.

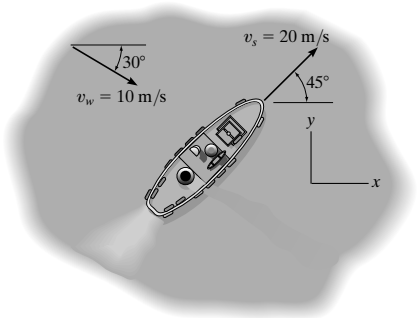

Solution I

Vector Analysis: The velocity of the smoke as observed from the ship is equal to the velocity of the wind relative to the ship. Here, the velocity of the ship and wind expressed in Cartesian vector form are $\mathbf{v}_s = [20\cos 45°\,\mathbf{i} + 20\sin 45°\,\mathbf{j}]$ m/s $= [14.14\mathbf{i} + 14.14\mathbf{j}]$ m/s and $\mathbf{v}_w = [10\cos 30°\,\mathbf{i} - 10\sin 30°\,\mathbf{j}] = [8.660\mathbf{i} - 5\mathbf{j}]$ m/s. Applying the relative velocity equation,

$$\mathbf{v}_w = \mathbf{v}_s + \mathbf{v}_{w/s}$$

$$8.660\mathbf{i} - 5\mathbf{j} = 14.14\mathbf{i} + 14.14\mathbf{j} + \mathbf{v}_{w/s}$$

$$\mathbf{v}_{w/s} = [-5.482\mathbf{i} - 19.14\mathbf{j}]\text{ m/s}$$

Thus, the magnitude of $\mathbf{v}_{w/s}$ is given by

$$v_w = \sqrt{(-5.482)^2 + (-19.14)^2} = 19.9\text{m/s} \qquad \textbf{Ans.}$$

and the direction angle θ that $\mathbf{v}_{w/s}$ makes with the x axis is

$$\theta = \tan^{-1}\left(\frac{19.14}{5.482}\right) = 74.0° \qquad \textbf{Ans.}$$

Solution II

Scalar Analysis: Applying the law of cosines by referring to the velocity diagram shown in Fig. *a*,

$$v_{w/s} = \sqrt{20^2 + 10^2 - 2(20)(10)\cos 75°}$$

$$= 19.91\text{ m/s} = 19.9\text{ m/s} \qquad \textbf{Ans.}$$

Using the result of $v_{w/s}$ and applying the law of sines,

$$\frac{\sin\phi}{10} = \frac{\sin 75°}{19.91} \qquad \phi = 29.02°$$

Thus,

$$\theta = 45° + \phi = 74.0° \qquad \textbf{Ans.}$$

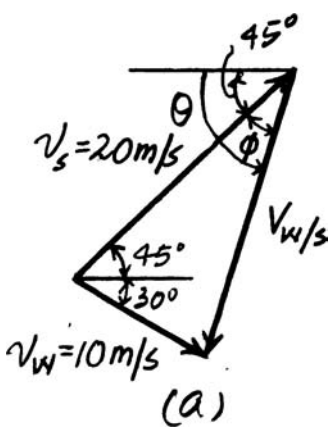

© 2010 Pearson Education, Inc., Upper Saddle River, NJ. All rights reserved. This material is protected under all copyright laws as they currently exist. No portion of this material may be reproduced, in any form or by any means, without permission in writing from the publisher.

12–219. The car is traveling at a constant speed of 100 km/h. If the rain is falling at 6 m/s in the direction shown, determine the velocity of the rain as seen by the driver.

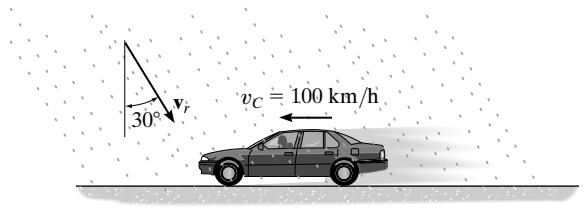

Solution I

Vector Analysis: The speed of the car is $v_c = \left(100\,\frac{\text{km}}{\text{h}}\right)\left(\frac{1000\text{ m}}{1\text{ km}}\right)\left(\frac{1\text{ h}}{3600\text{ s}}\right)$ $= 27.78$ m/s.The velocity of the car and the rain expressed in Cartesian vector form are $\mathbf{v}_c = [-27.78\mathbf{i}]$ m/s and $\mathbf{v}_r = [6\sin 30°\mathbf{i} - 6\cos 30°\mathbf{j}] = [3\mathbf{i} - 5.196\mathbf{j}]$ m/s. Applying the relative velocity equation, we have

$$\mathbf{v}_r = \mathbf{v}_c + \mathbf{v}_{r/c}$$

$$3\mathbf{i} - 5.196\mathbf{j} = -27.78\mathbf{i} + \mathbf{v}_{r/c}$$

$$\mathbf{v}_{r/c} = [30.78\mathbf{i} - 5.196\mathbf{j}]\text{ m/s}$$

Thus, the magnitude of $\mathbf{v}_{r/c}$ is given by

$$v_{r/c} = \sqrt{30.78^2 + (-5.196)^2} = 31.2\text{m/s} \qquad \textbf{Ans.}$$

and the angle $x_{r/c}$ makes with the x axis is

$$\theta = \tan^{-1}\left(\frac{5.196}{30.78}\right) = 9.58° \qquad \textbf{Ans.}$$

Solution II

Scalar Analysis: Referring to the velocity diagram shown in Fig. *a* and applying the law of cosines,

$$v_{r/c} = \sqrt{27.78^2 + 6^2 - 2(27.78)(6)\cos 120°}$$

$$= 19.91\text{ m/s} = 19.9\text{ m/s} \qquad \textbf{Ans.}$$

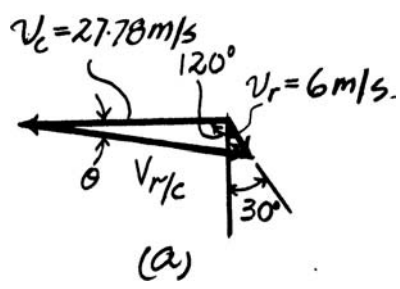

Using the result of $v_{r/c}$ and applying the law of sines,

$$\frac{\sin\theta}{6} = \frac{\sin 120°}{31.21}$$

$$\theta = 9.58° \qquad \textbf{Ans.}$$

© 2010 Pearson Education, Inc., Upper Saddle River, NJ. All rights reserved. This material is protected under all copyright laws as they currently exist. No portion of this material may be reproduced, in any form or by any means, without permission in writing from the publisher.

***12–220.** The man can row the boat in still water with a speed of 5 m/s. If the river is flowing at 2 m/s, determine the speed of the boat and the angle θ he must direct the boat so that it travels from A to B.

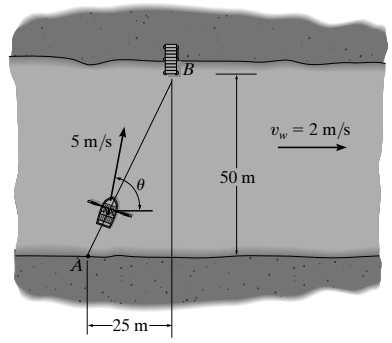

Solution I

Vector Analysis: Here, the velocity $\mathbf{v}_b$ of the boat is directed from A to B. Thus, $\phi = \tan^{-1}\left(\frac{50}{25}\right) = 63.43°$. The magnitude of the boat's velocity relative to the flowing river is $v_{b/w} = 5$ m/s. Expressing $\mathbf{v}_b$, $\mathbf{v}_w$, and $\mathbf{v}_{b/w}$ in Cartesian vector form, we have $\mathbf{v}_b = v_b \cos 63.43\mathbf{i} + v_b \sin 63.43\mathbf{j} = 0.4472v_b\mathbf{i} + 0.8944v_b\mathbf{j}$, $\mathbf{v}_w = [2\mathbf{i}]$ m/s, and $\mathbf{v}_{b/w} = 5\cos\theta\mathbf{i} + 5\sin\theta\mathbf{j}$. Applying the relative velocity equation, we have

$$\mathbf{v}_b = \mathbf{v}_w + \mathbf{v}_{b/w}$$

$$0.4472v_b\mathbf{i} + 0.8944v_b\mathbf{j} = 2\mathbf{i} + 5\cos\theta\mathbf{i} + 5\sin\theta\mathbf{j}$$

$$0.4472v_b\mathbf{i} + 0.8944v_b\mathbf{j} = (2 + 5\cos\theta)\mathbf{i} + 5\sin\theta\mathbf{j}$$

Equating the **i** and **j** components, we have

$$0.4472v_b = 2 + 5\cos\theta \qquad \textbf{(1)}$$

$$0.8944v_b = 5\sin\theta \qquad \textbf{(2)}$$

Solving Eqs. (1) and (2) yields

$$v_b = 5.56 \text{ m/s} \qquad \theta = 84.4° \qquad \textbf{Ans.}$$

Solution II

Scalar Analysis: Referring to the velocity diagram shown in Fig. *a* and applying the law of cosines,

$$5^2 = 2^2 + v_b{}^2 - 2(2)(v_b)\cos 63.43°$$

$$v_b{}^2 - 1.789v_b - 21 = 0$$

$$v_b = \frac{-(-1.789) \pm \sqrt{(-1.789)^2 - 4(1)(-21)}}{2(1)}$$

Choosing the positive root,

$$v_b = 5.563 \text{ m/s} = 5.56 \text{ m/s} \qquad \textbf{Ans.}$$

Using the result of v_b and applying the law of sines,

$$\frac{\sin 180° - \theta}{5.563} = \frac{\sin 63.43°}{5}$$

$$\theta = 84.4° \qquad \textbf{Ans.}$$

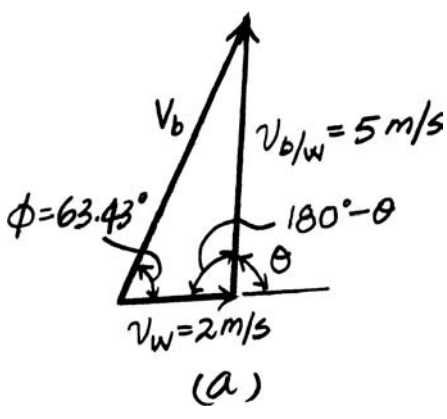

© 2010 Pearson Education, Inc., Upper Saddle River, NJ. All rights reserved. This material is protected under all copyright laws as they currently exist. No portion of this material may be reproduced, in any form or by any means, without permission in writing from the publisher.

•12–221. At the instant shown, cars A and B travel at speeds of 30 mi/h and 20 mi/h, respectively. If B is increasing its speed by 1200 mi/h^2, while A maintains a constant speed, determine the velocity and acceleration of B with respect to A.

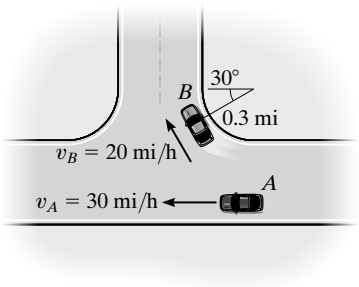

$$\mathbf{v}_B = \mathbf{v}_A + \mathbf{v}_{B/A}$$

$$\overset{20\ \ 30^\circ}{\nwarrow\!\!\!

© 2010 Pearson Education, Inc., Upper Saddle River, NJ. All rights reserved. This material is protected under all copyright laws as they currently exist. No portion of this material may be reproduced, in any form or by any means, without permission in writing from the publisher.

12–222. At the instant shown, cars A and B travel at speeds of 30 m/h and 20 mi/h, respectively. If A is increasing its speed at 400 mi/h^2 whereas the speed of B is decreasing at 800 mi/h^2, determine the velocity and acceleration of B with respect to A.

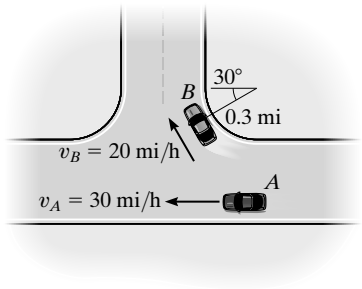

$$\mathbf{v}_B = \mathbf{v}_A + \mathbf{v}_{B/A}$$

$$\overset{20\ \ 30^\circ}{\nwarrow\!\!\!

© 2010 Pearson Education, Inc., Upper Saddle River, NJ. All rights reserved. This material is protected under all copyright laws as they currently exist. No portion of this material may be reproduced, in any form or by any means, without permission in writing from the publisher.

12–223. Two boats leave the shore at the same time and travel in the directions shown. If $v_A = 20\,\text{ft/s}$ and $v_B = 15\,\text{ft/s}$, determine the velocity of boat A with respect to boat B. How long after leaving the shore will the boats be 800 ft apart?

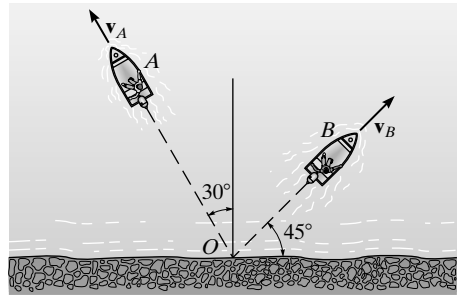

$\mathbf{v}_A = \mathbf{v}_B + \mathbf{v}_{A/B}$

$-20 \sin 30°\mathbf{i} + 20 \cos 30°\mathbf{j} = 15 \cos 45°\mathbf{i} + 15 \sin 45°\mathbf{j} + \mathbf{v}_{A/B}$

$\mathbf{v}_{A/B} = \{-20.61\mathbf{i} + 6.714\mathbf{j}\}\ \text{ft/s}$

$v_{A/B} = \sqrt{(-20.61)^2 + (+6.714)^2} = 21.7\ \text{ft/s}$ **Ans.**

$\theta = \tan^{-1}\left(\dfrac{6.714}{20.61}\right) = 18.0°$ ⦦ **Ans.**

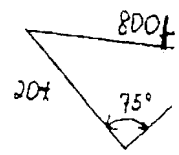

$(800)^2 = (20\,t)^2 + (15\,t)^2 - 2(20\,t)(15\,t) \cos 75°$

$t = 36.9\ \text{s}$ **Ans.**

Also

$$t = \frac{800}{v_{A/B}} = \frac{800}{21.68} = 36.9\ \text{s}$$ **Ans.**

***12–224.** At the instant shown, cars A and B travel at speeds of 70 mi/h and 50 mi/h, respectively. If B is increasing its speed by 1100 mi/h^2, while A maintains a constant speed, determine the velocity and acceleration of B with respect to A. Car B moves along a curve having a radius of curvature of 0.7 mi.

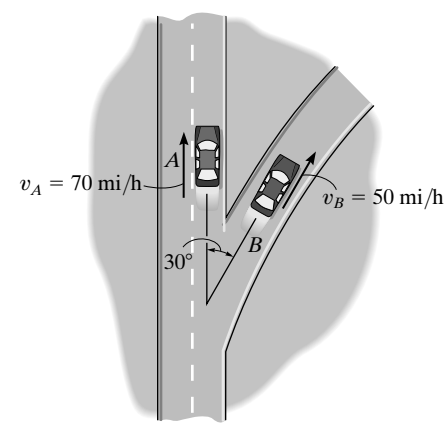

Relative Velocity:

$$\mathbf{v}_B = \mathbf{v}_A + \mathbf{v}_{B/A}$$

$$50 \sin 30°\mathbf{i} + 50 \cos 30°\mathbf{j} = 70\mathbf{j} + \mathbf{v}_{B/A}$$

$$\mathbf{v}_{B/A} = \{25.0\mathbf{i} - 26.70\mathbf{j}\}\ \text{mi/h}$$

Thus, the magnitude of the relative velocity $\mathbf{v}_{B/A}$ is

$$v_{B/A} = \sqrt{25.0^2 + (-26.70)^2} = 36.6\ \text{mi/h}$$ **Ans.**

The direction of the relative velocity is the same as the direction of that for relative acceleration. Thus

$$\theta = \tan^{-1}\frac{26.70}{25.0} = 46.9°$$ ⦦ **Ans.**

Relative Acceleration: Since car B is traveling along a curve, its normal acceleration is $(a_B)_n = \dfrac{v_B^2}{\rho} = \dfrac{50^2}{0.7} = 3571.43\ \text{mi/h}^2$. Applying Eq. 12–35 gives

$$\mathbf{a}_B = \mathbf{a}_A + \mathbf{a}_{B/A}$$

$$(1100 \sin 30° + 3571.43 \cos 30°)\mathbf{i} + (1100 \cos 30° - 3571.43 \sin 30°)\mathbf{j} = 0 + \mathbf{a}_{B/A}$$

$$\mathbf{a}_{B/A} = \{3642.95\mathbf{i} - 833.09\mathbf{j}\}\ \text{mi/h}^2$$

Thus, the magnitude of the relative velocity $\mathbf{a}_{B/A}$ is

$$a_{B/A} = \sqrt{3642.95^2 + (-833.09)^2} = 3737\ \text{mi/h}^2$$ **Ans.**

And its direction is

$$\phi = \tan^{-1}\frac{833.09}{3642.95} = 12.9°$$ ⦦ **Ans.**

© 2010 Pearson Education, Inc., Upper Saddle River, NJ. All rights reserved. This material is protected under all copyright laws as they currently exist. No portion of this material may be reproduced, in any form or by any means, without permission in writing from the publisher.

•12–225. At the instant shown, cars A and B travel at speeds of 70 mi/h and 50 mi/h, respectively. If B is decreasing its speed at 1400 mi/h^2 while A is increasing its speed at 800 mi/h^2, determine the acceleration of B with respect to A. Car B moves along a curve having a radius of curvature of 0.7 mi.

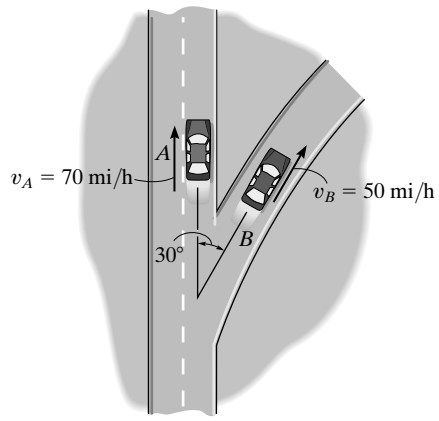

Relative Acceleration: Since car B is traveling along a curve, its normal acceleration is $(a_B)_n = \dfrac{v_B^2}{\rho} = \dfrac{50^2}{0.7} = 3571.43 \text{ mi/h}^2$. Applying Eq. 12–35 gives

$$\mathbf{a}_B = \mathbf{a}_A + \mathbf{a}_{B/A}$$

$$(3571.43 \cos 30° - 1400 \sin 30°)\mathbf{i} + (-1400 \cos 30° - 3571.43 \sin 30°)\mathbf{j} = 800\mathbf{j} + \mathbf{a}_{B/A}$$

$$\mathbf{a}_{B/A} = \{2392.95\mathbf{i} - 3798.15\mathbf{j}\} \text{ mi/h}^2$$

Thus, the magnitude of the relative acc. $\mathbf{a}_{B/A}$ is

$$a_{B/A} = \sqrt{2392.95^2 + (-3798.15)^2} = 4489 \text{ mi/h}^2 \qquad \textbf{Ans.}$$

And its direction is

$$\phi = \tan^{-1}\frac{3798.15}{2392.95} = 57.8° \searrow \qquad \textbf{Ans.}$$

12–226. An aircraft carrier is traveling forward with a velocity of 50 km/h. At the instant shown, the plane at A has just taken off and has attained a forward horizontal air speed of 200 km/h, measured from still water. If the plane at B is traveling along the runway of the carrier at 175 km/h in the direction shown, determine the velocity of A with respect to B.

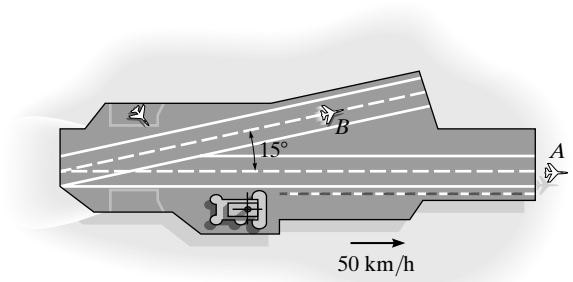

$$\mathbf{v}_B = \mathbf{v}_C + \mathbf{v}_{B/C}$$

$$\mathbf{v}_B = 50\mathbf{i} + 175 \cos 15°\mathbf{i} + 175 \sin 15°\mathbf{j} = 219.04\mathbf{i} + 45.293\mathbf{j}$$

$$\mathbf{v}_A = \mathbf{v}_B + \mathbf{v}_{A/B}$$

$$200\mathbf{i} = 219.04\mathbf{i} + 45.293\mathbf{j} + (v_{A/B})_x\mathbf{i} + (v_{A/B})_y\mathbf{j}$$

$$200 = 219.04 + (v_{A/B})_x$$

$$0 = 45.293 + (v_{A/B})_y$$

$$(v_{A/B})_x = -19.04$$

$$(v_{A/B})_y = -45.293$$

$$v_{A/B} = \sqrt{(-19.04)^2 + (-45.293)^2} = 49.1 \text{ km/h} \qquad \textbf{Ans.}$$

$$\theta = \tan^{-1}\left(\frac{45.293}{19.04}\right) = 67.2° \swarrow \qquad \textbf{Ans.}$$

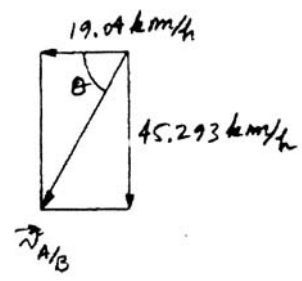

© 2010 Pearson Education, Inc., Upper Saddle River, NJ. All rights reserved. This material is protected under all copyright laws as they currently exist. No portion of this material may be reproduced, in any form or by any means, without permission in writing from the publisher.

12–227. A car is traveling north along a straight road at 50 km/h. An instrument in the car indicates that the wind is directed towards the east. If the car's speed is 80 km/h, the instrument indicates that the wind is directed towards the north-east. Determine the speed and direction of the wind.

Solution I

Vector Analysis: For the first case, the velocity of the car and the velocity of the wind relative to the car expressed in Cartesian vector form are $\mathbf{v}_c = [50\mathbf{j}]$ km/h and $\mathbf{v}_{W/C} = (v_{W/C})_1\,\mathbf{i}$. Applying the relative velocity equation, we have

$$\mathbf{v}_c = \mathbf{v}_w + \mathbf{v}_{w/c}$$

$$\mathbf{v}_w = 50\mathbf{j} + (v_{w/c})_1\,\mathbf{i}$$

$$\mathbf{v}_w = (v_{w/c})_1\mathbf{i} + 50\mathbf{j} \qquad \textbf{(1)}$$

For the second case, $v_C = [80\mathbf{j}]$ km/h and $\mathbf{v}_{W/C} = (v_{W/C})_2 \cos 45°\mathbf{i} + (v_{W/C})_2 \sin 45°\,\mathbf{j}$. Applying the relative velocity equation, we have

$$\mathbf{v}_w = \mathbf{v}_c + \mathbf{v}_{w/c}$$

$$\mathbf{v}_w = 80\mathbf{j} + (v_{w/c})_2 \cos 45°\mathbf{i} + (v_{w/c})_2 \sin 45°\,\mathbf{j}$$

$$\mathbf{v}_w = (v_{w/c})_2 \cos 45°\,\mathbf{i} + \left[80 + (v_{w/c})_2 \sin 45°\right]\mathbf{j} \qquad \textbf{(2)}$$

Equating Eqs. (1) and (2) and then the **i** and **j** components,

$$(v_{w/c})_1 = (v_{w/c})_2 \cos 45° \qquad \textbf{(3)}$$

$$50 = 80 + (v_{w/c})_2 \sin 45° \qquad \textbf{(4)}$$

Solving Eqs. (3) and (4) yields

$$(v_{w/c})_2 = -42.43 \text{ km/h} \qquad\qquad (v_{w/c})_1 = -30 \text{ km/h}$$

Substituting the result of $(v_{w/c})_1$ into Eq. (1),

$$\mathbf{v}_w = [-30\mathbf{i} + 50\mathbf{j}] \text{ km/h}$$

Thus, the magnitude of $\mathbf{v}_W$ is

$$v_w = \sqrt{(-30)^2 + 50^2} = 58.3 \text{ km/h} \qquad \textbf{Ans.}$$

and the directional angle θ that $\mathbf{v}_W$ makes with the x axis is

$$\theta = \tan^{-1}\left(\frac{50}{30}\right) = 59.0° \nwarrow \qquad \textbf{Ans.}$$

© 2010 Pearson Education, Inc., Upper Saddle River, NJ. All rights reserved. This material is protected under all copyright laws as they currently exist. No portion of this material may be reproduced, in any form or by any means, without permission in writing from the publisher.

***12–228.** At the instant shown car A is traveling with a velocity of 30 m/s and has an acceleration of 2 m/s^2 along the highway. At the same instant B is traveling on the trumpet interchange curve with a speed of 15 m/s, which is decreasing at 0.8 m/s^2. Determine the relative velocity and relative acceleration of B with respect to A at this instant.

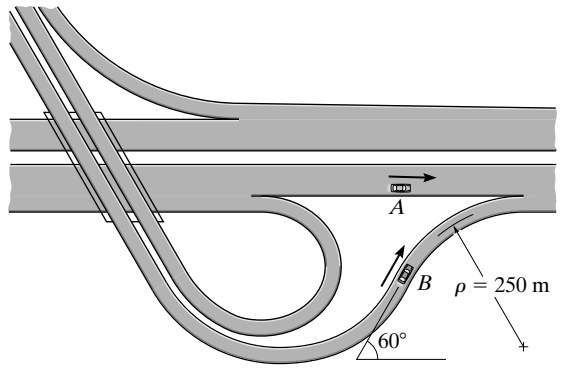

$\mathbf{v}_B = \mathbf{v}_A + \mathbf{v}_{B/A}$

$15\cos 60°\mathbf{i} + 15\sin 60°\mathbf{j} = 30\mathbf{i} + (v_{B/A})_x\mathbf{i} + (v_{B/A})_y\mathbf{j}$

$15\cos 60° = 30 + (v_{B/A})_x$

$15\sin 60° = 0 + (v_{B/A})_y$

$(v_{B/A})_x = -22.5 = 22.5 \text{ m/s} \leftarrow$

$(v_{B/A})_y = 12.99 \text{ m/s} \uparrow$

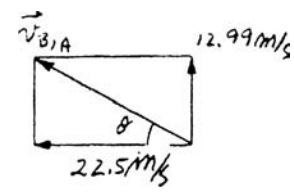

$v_{B/A} = \sqrt{(22.5)^2 + (12.99)^2} = 26.0 \text{ m/s}$ **Ans.**

$\theta = \tan^{-1}\left(\dfrac{12.99}{22.5}\right) = 30°$ ↖ **Ans.**

$(a_B)_n = \dfrac{v^2}{\rho} = \dfrac{15^2}{250} = 0.9 \text{ m/s}^2$

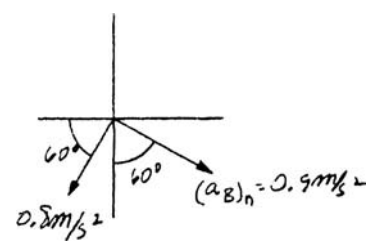

$\mathbf{a}_B = \mathbf{a}_A + \mathbf{a}_{B/A}$

$-0.8\cos 60°\mathbf{i} - 0.8\sin 60°\mathbf{j} + 0.9\sin 60°\mathbf{i} - 0.9\cos 60°\mathbf{j} = 2\mathbf{i} + (a_{B/A})_x\mathbf{i} + (a_{B/A})_y\mathbf{j}$

$-0.8\cos 60° + 0.9\sin 60° = 2 + (a_{B/A})_x$

$-0.8\sin 60° - 0.9\cos 60° = (a_{B/A})_y$

$(a_{B/A})_x = -1.6206 \text{ ft/s}^2 = 1.6206 \text{ m/s}^2 \leftarrow$

$(a_{B/A})_y = -1.1428 \text{ ft/s}^2 = 1.1428 \text{ m/s}^2 \downarrow$

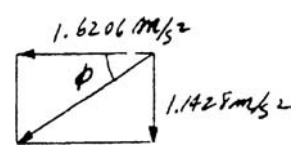

$a_{B/A} = \sqrt{(1.6206)^2 + (1.1428)^2} = 1.98 \text{ m/s}^2$ **Ans.**

$\phi = \tan^{-1}\left(\dfrac{1.1428}{1.6206}\right) = 35.2°$ ↙ **Ans.**

© 2010 Pearson Education, Inc., Upper Saddle River, NJ. All rights reserved. This material is protected under all copyright laws as they currently exist. No portion of this material may be reproduced, in any form or by any means, without permission in writing from the publisher.

•12–229. Two cyclists A and B travel at the same constant speed v. Determine the velocity of A with respect to B if A travels along the circular track, while B travels along the diameter of the circle.

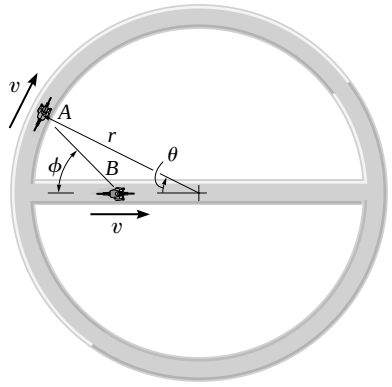

$$\mathbf{v}_A = v\sin\theta\mathbf{i} + v\cos\theta\,\mathbf{j} \qquad \mathbf{v}_B = v\,\mathbf{i}$$

$$\mathbf{v}_{A/B} = \mathbf{v}_A - \mathbf{v}_B$$

$$= (v\sin\theta\mathbf{i} + v\cos\theta\,\mathbf{j}) - v\,\mathbf{i}$$

$$= (v\sin\theta - v)\mathbf{i} + v\cos\theta\mathbf{j}$$

$$v_{A/B} = \sqrt{(v\sin\theta - v)^2 + (v\cos\theta)^2}$$

$$= \sqrt{2v^2 - 2v^2\sin\theta}$$

$$= v\sqrt{2(1 - \sin\theta)} \qquad \textbf{Ans.}$$

12–230. A man walks at 5 km/h in the direction of a 20-km/h wind. If raindrops fall vertically at 7 km/h in *still air*, determine the direction in which the drops appear to fall with respect to the man. Assume the horizontal speed of the raindrops is equal to that of the wind.

Relative Velocity: The velocity of the rain must be determined first. Applying Eq. 12–34 gives

$$\mathbf{v}_r = \mathbf{v}_w + \mathbf{v}_{r/w} = 20\mathbf{i} + (-7\mathbf{j}) = \{20\mathbf{i} - 7\mathbf{j}\}\ \text{km/h}$$

Thus, the relative velocity of the rain with respect to the man is

$$\mathbf{v}_r = \mathbf{v}_m + \mathbf{v}_{r/m}$$

$$20\mathbf{i} - 7\mathbf{j} = 5\mathbf{i} + \mathbf{v}_{r/m}$$

$$\mathbf{v}_{r/m} = \{15\mathbf{i} - 7\mathbf{j}\}\ \text{km/h}$$

The magnitude of the relative velocity $\mathbf{v}_{r/m}$ is given by

$$v_{r/m} = \sqrt{15^2 + (-7)^2} = 16.6\ \text{km/h} \qquad \textbf{Ans.}$$

And its direction is given by

$$\theta = \tan^{-1}\frac{7}{15} = 25.0^\circ \searrow \qquad \textbf{Ans.}$$

© 2010 Pearson Education, Inc., Upper Saddle River, NJ. All rights reserved. This material is protected under all copyright laws as they currently exist. No portion of this material may be reproduced, in any form or by any means, without permission in writing from the publisher.

12–231. A man can row a boat at 5 m/s in still water. He wishes to cross a 50-m-wide river to point B, 50 m downstream. If the river flows with a velocity of 2 m/s, determine the speed of the boat and the time needed to make the crossing.

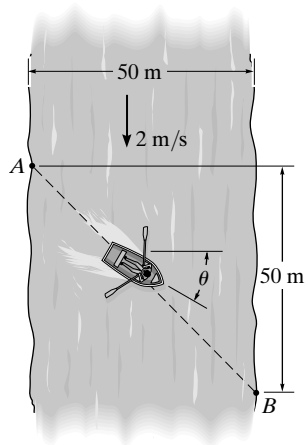

Relative Velocity:

$$\mathbf{v}_b = \mathbf{v}_r + \mathbf{v}_{b/r}$$

$$v_b \sin 45°\mathbf{i} - v_b \cos 45°\mathbf{j} = -2\mathbf{j} + 5\cos\theta\mathbf{i} - 5\sin\theta\mathbf{j}$$

Equating **i** and **j** component, we have

$$v_b \sin 45° = 5\cos\theta \qquad \textbf{[1]}$$

$$-v_b \cos 45° = -2 - 5\sin\theta \qquad \textbf{[2]}$$

Solving Eqs. [1] and [2] yields

$$\theta = 28.57°$$

$$v_b = 6.210 \text{ m/s} = 6.21 \text{ m/s} \qquad \textbf{Ans.}$$

Thus, the time t required by the boat to travel from point A to B is

$$t = \frac{s_{AB}}{v_b} = \frac{\sqrt{50^2 + 50^2}}{6.210} = 11.4 \text{ s} \qquad \textbf{Ans.}$$

© 2010 Pearson Education, Inc., Upper Saddle River, NJ. All rights reserved. This material is protected under all copyright laws as they currently exist. No portion of this material may be reproduced, in any form or by any means, without permission in writing from the publisher.

•13–1. The casting has a mass of 3 Mg. Suspended in a vertical position and initially at rest, it is given an upward speed of 200 mm/s in 0.3 s using a crane hook *H*. Determine the tension in cables *AC* and *AB* during this time interval if the acceleration is constant.

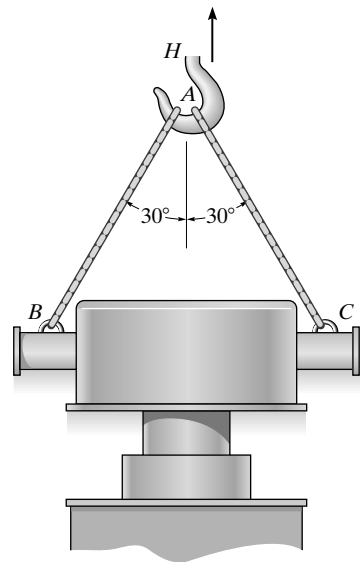

Kinematics: Applying the equation $v = v_0 + a_c t$, we have

$(+\uparrow)$ $\quad 0.2 = 0 + a(0.3) \qquad a = 0.6667 \text{ m/s}^2$

Equations of Motion:

$\overset{+}{\rightarrow} \Sigma F_x = ma_x; \qquad F_{AB} \sin 30 - F_{AC} \sin 30° = 0$

$$F_{AB} = F_{AC} = F$$

$+\uparrow \Sigma F_y = ma_y; \qquad 2F\cos 30° - 29430 = 3000(0.6667)$

$$F_{AB} = F_{AC} = F = 18146.1 \text{ N} = 18.1 \text{ kN} \qquad \textbf{Ans.}$$

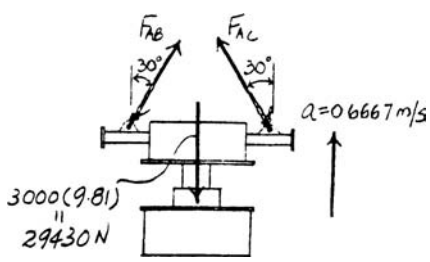

13–2. The 160-Mg train travels with a speed of 80 km/h when it starts to climb the slope. If the engine exerts a traction force **F** of 1/20 of the weight of the train and the rolling resistance $\mathbf{F}_D$ is equal to 1/500 of the weight of the train, determine the deceleration of the train.

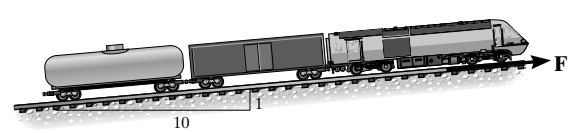

Free-Body Diagram: The tractive force and rolling resistance indicated on the free-body diagram of the train, Fig. (a), are $F = \left(\frac{1}{20}\right)(160)(10^3)(9.81) \text{ N} = 78\,480 \text{ N}$ and $F_D = \left(\frac{1}{500}\right)(160)(10^3)(9.81)\text{N} = 3139.2 \text{ N}$, respectively.

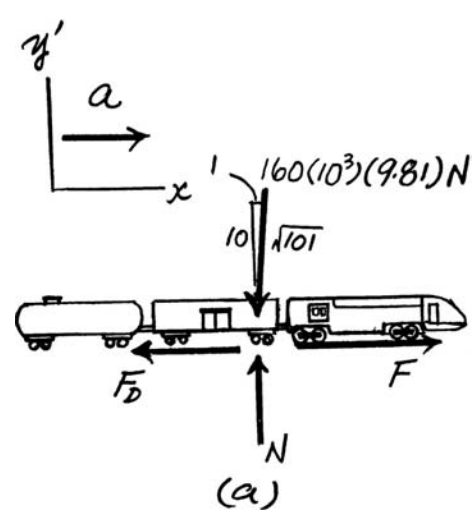

Equations of Motion: Here, the acceleration **a** of the train will be assumed to be directed up the slope. By referring to Fig. (a),

$+\nearrow \Sigma F_{x'} = ma_{x'}; \qquad 78\,480 - 3139.2 - 160(10^3)(9.81)\left(\frac{1}{\sqrt{101}}\right) = 160(10^3)a$

$$a = -0.5057 \text{ m/s}^2 \qquad \textbf{Ans.}$$

© 2010 Pearson Education, Inc., Upper Saddle River, NJ. All rights reserved. This material is protected under all copyright laws as they currently exist. No portion of this material may be reproduced, in any form or by any means, without permission in writing from the publisher.

13–3. The 160-Mg train starts from rest and begins to climb the slope as shown. If the engine exerts a traction force **F** of 1/8 of the weight of the train, determine the speed of the train when it has traveled up the slope a distance of 1 km. Neglect rolling resistance.

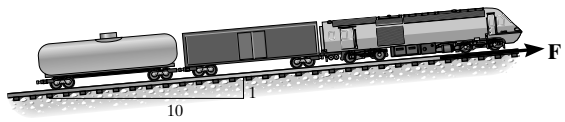

Free-Body Diagram: Here, the tractive force indicated on the free-body diagram of the train, Fig. (a), is $F = \frac{1}{8}(160)(10^3)(9.81)\text{ N} = 196.2(10^3)\text{ N}$.

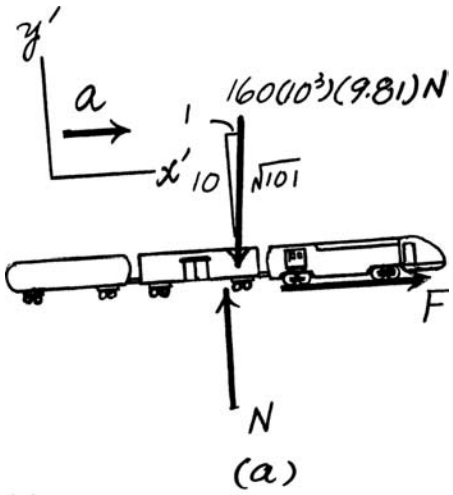

Equations of Motion: Here, the acceleration **a** of the train will be assumed directed up the slope. By referring to Fig. (a),

$$+\nearrow \Sigma F_{x'} = ma_{x'}; \qquad 196.2(10^3) - 160(10^3)(9.81)\left(\frac{1}{\sqrt{101}}\right) = 160(10^3)a$$

$$a = 0.2501\text{ m/s}^2$$

Kinematics: Using the result of **a**,

$$(+\nearrow) \qquad v^2 = v_0{}^2 + 2a_c(s - s_0)$$

$$v^2 = 0 + 2(0.2501)(1000 - 0)$$

$$v = 22.4\text{ m/s} \qquad \textbf{Ans.}$$

***13–4.** The 2-Mg truck is traveling at 15 m/s when the brakes on all its wheels are applied, causing it to skid for a distance of 10 m before coming to rest. Determine the constant horizontal force developed in the coupling C, and the frictional force developed between the tires of the truck and the road during this time. The total mass of the boat and trailer is 1 Mg.

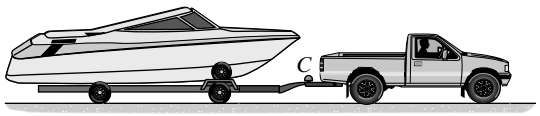

Kinematics: Since the motion of the truck and trailer is known, their common acceleration **a** will be determined first.

$$\left(\overset{+}{\rightarrow}\right) \qquad v^2 = v_0{}^2 + 2a_c(s - s_0)$$

$$0 = 15^2 + 2a(10 - 0)$$

$$a = -11.25\text{ m/s}^2 = 11.25\text{ m/s}^2 \leftarrow$$

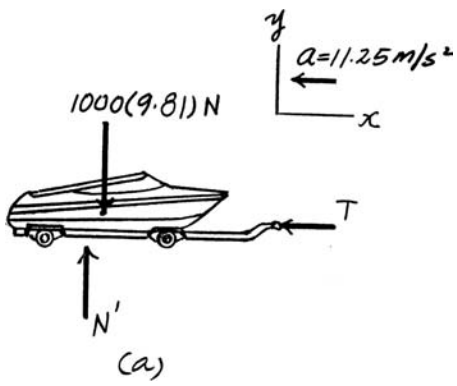

Free-Body Diagram: The free-body diagram of the truck and trailer are shown in Figs. (a) and (b), respectively. Here, **F** representes the frictional force developed when the truck skids, while the force developed in coupling C is represented by **T**.

Equations of Motion: Using the result of **a** and referrning to Fig. (a),

$$\overset{+}{\rightarrow} \Sigma F_x = ma_x; \qquad -T = 1000(-11.25)$$

$$T = 11\,250\text{ N} = 11.25\text{ kN} \qquad \textbf{Ans.}$$

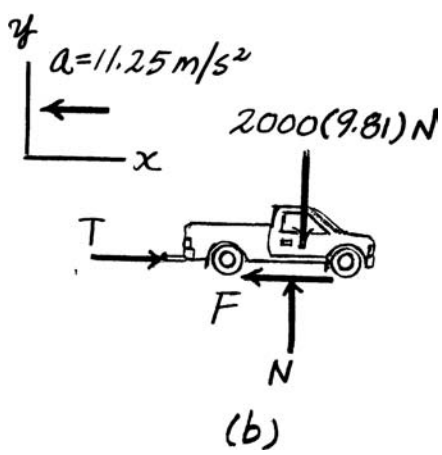

Using the results of **a** and **T** and referring to Fig. (b),

$$+\uparrow \Sigma F_x = ma_x; \qquad 11\,250 - F = 2000(-11.25)$$

$$F = 33\,750\text{ N} = 33.75\text{ kN} \qquad \textbf{Ans.}$$

© 2010 Pearson Education, Inc., Upper Saddle River, NJ. All rights reserved. This material is protected under all copyright laws as they currently exist. No portion of this material may be reproduced, in any form or by any means, without permission in writing from the publisher.

•13–5. If blocks A and B of mass 10 kg and 6 kg, respectively, are placed on the inclined plane and released, determine the force developed in the link. The coefficients of kinetic friction between the blocks and the inclined plane are $\mu_A = 0.1$ and $\mu_B = 0.3$. Neglect the mass of the link.

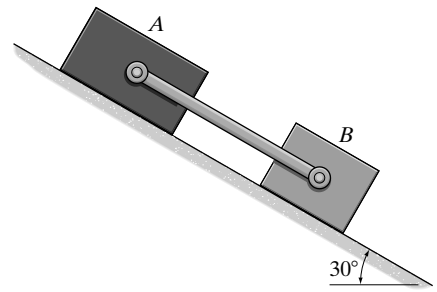

Free-Body Diagram: Here, the kinetic friction $(F_f)_A = \mu_A N_A = 0.1N_A$ and $(F_f)_B = \mu_B N_B = 0.3N_B$ are required to act up the plane to oppose the motion of the blocks which are down the plane. Since the blocks are connected, they have a common acceleration **a**.

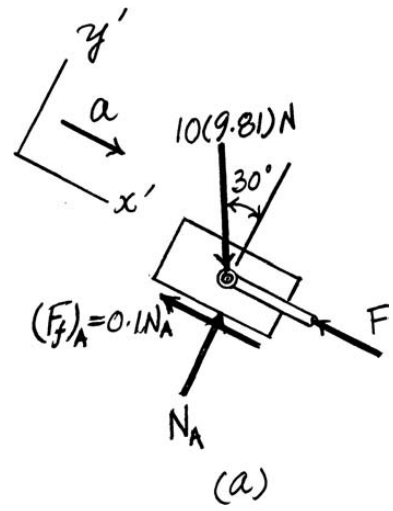

Equations of Motion: By referring to Figs. (a) and (b),

$+\nearrow \Sigma F_{y'} = ma_{y'}$; $\quad N_A - 10(9.81)\cos 30° = 10(0)$

$N_A = 84.96$ N

$\searrow + \Sigma F_{x'} = ma_{x'}$; $\quad 10(9.81)\sin 30° - 0.1(84.96) - F = 10a$

$40.55 - F = 10a$ **(1)**

and

$+\nearrow \Sigma F_{y'} = ma_{y'}$; $\quad N_B - 6(9.81)\cos 30° = 6(0)$

$N_B = 50.97$ N

$\searrow + \Sigma F_{x'} = ma_{x'}$; $\quad F + 6(9.81)\sin 30° - 0.3(50.97) = 6a$

$F + 14.14 = 6a$ **(2)**

Solving Eqs. (1) and (2) yields

$a = 3.42\ \text{m/s}^2$

$F = 6.37$ N **Ans.**

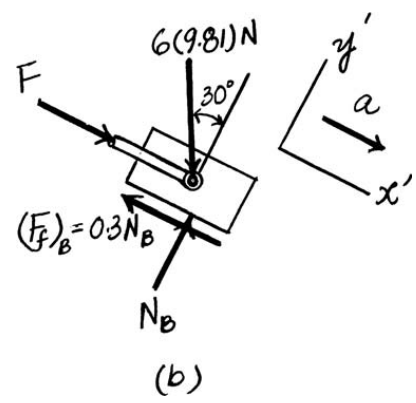

© 2010 Pearson Education, Inc., Upper Saddle River, NJ. All rights reserved. This material is protected under all copyright laws as they currently exist. No portion of this material may be reproduced, in any form or by any means, without permission in writing from the publisher.

13–6. Motors A and B draw in the cable with the accelerations shown. Determine the acceleration of the 300-lb crate C and the tension developed in the cable. Neglect the mass of all the pulleys.

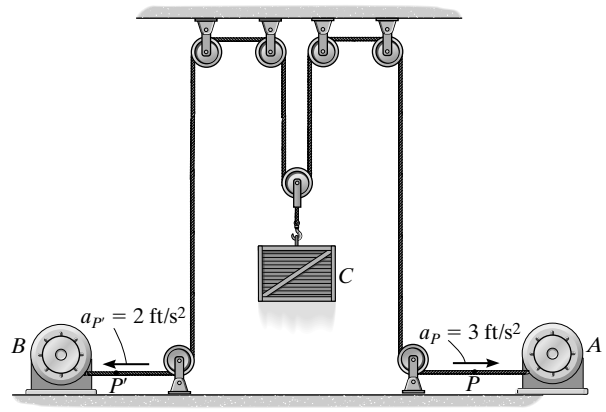

Kinematics: We can express the length of the cable in terms of s_P, $s_{P'}$, and s_C by referring to Fig. (a).

$$s_P + s_{P'} + 2s_C = l$$

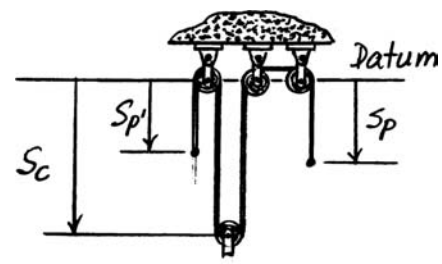

(a)

The second time derivative of the above equation gives

$$(+\downarrow) \qquad a_P + a_{P'} + 2a_C = 0 \qquad \textbf{(1)}$$

Here, $a_P = 3$ ft/s² and $a_{P'} = 2$ ft/s². Substituting these values into Eq. (1),

$$3 + 2 + 2a_C = 0$$

$$a_C = -2.5 \text{ ft/s}^2 = 2.5 \text{ ft/s}^2 \uparrow \qquad \textbf{Ans.}$$

Free-Body Diagram: The free-body diagram of the crate is shown in Fig. (b).

Equations of Motion: Using the result of $\mathbf{a}_C$ and referring to Fig. (b),

$$+\uparrow \Sigma F_y = ma_y; \qquad 2T - 300 = \frac{300}{32.2}(2.5)$$

$$T = 162 \text{ lb} \qquad \textbf{Ans.}$$

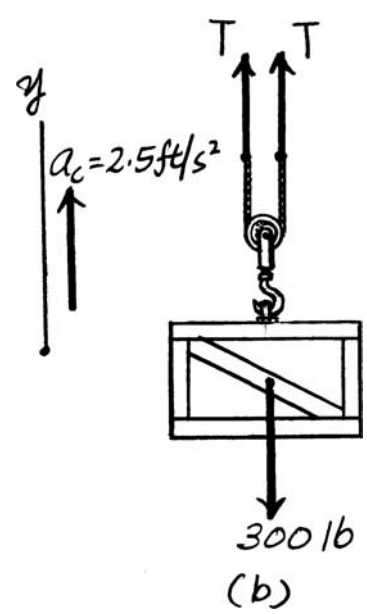

(b)

© 2010 Pearson Education, Inc., Upper Saddle River, NJ. All rights reserved. This material is protected under all copyright laws as they currently exist. No portion of this material may be reproduced, in any form or by any means, without permission in writing from the publisher.

13–7. The van is traveling at 20 km/h when the coupling of the trailer at A fails. If the trailer has a mass of 250 kg and coasts 45 m before coming to rest, determine the constant horizontal force F created by rolling friction which causes the trailer to stop.

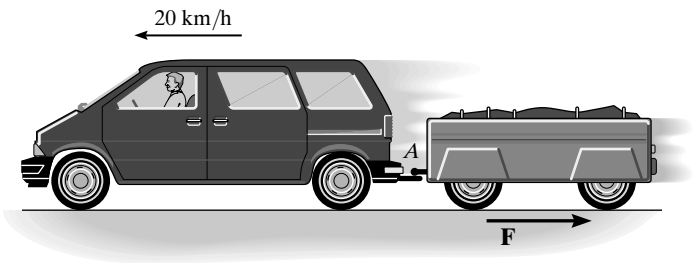

$$20 \text{ km/h} = \frac{20(10^3)}{3600} = 5.556 \text{ m/s}$$

$\left(\overset{+}{\leftarrow}\right)$ $\quad v^2 = v_0^2 + 2a_c(s - s_0)$

$$0 = 5.556^2 + 2(a)(45 - 0)$$

$$a = -0.3429 \text{ m/s}^2 = 0.3429 \text{ m/s}^2 \rightarrow$$

$\overset{+}{\rightarrow} \Sigma F_x = ma_x; \quad F = 250(0.3429) = 85.7 \text{ N}$ **Ans.**

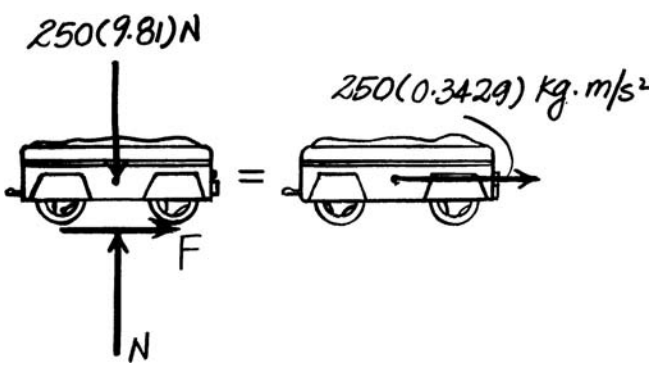

© 2010 Pearson Education, Inc., Upper Saddle River, NJ. All rights reserved. This material is protected under all copyright laws as they currently exist. No portion of this material may be reproduced, in any form or by any means, without permission in writing from the publisher.

***13–8.** If the 10-lb block A slides down the plane with a constant velocity when $\theta = 30°$, determine the acceleration of the block when $\theta = 45°$.

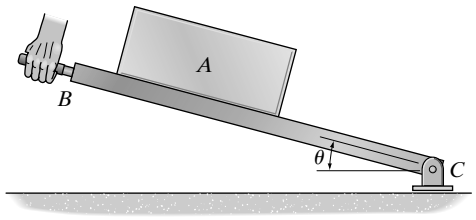

Free-Body Diagram: The free-body diagrams of the block when $\theta = 30°$ and $\theta = 45°$ are shown in Figs. (a) and (b), respectively. Here, the kinetic friction $F_f = \mu_k N$ and $F_{f'} = \mu_k N'$ are required to act up the plane to oppose the motion of the block which is directed down the plane for both cases.

Equations of Motion: Since the block has constant velocity when $\theta = 30°$, $a_{x'} = a = 0$. Also, $a_{y'} = 0$. By referring to Fig. (a), we can write

$$+\nearrow \Sigma F_{y'} = ma_{y'}; \qquad N - 10\cos 30° = \frac{10}{32.2}(0)$$

$$N = 8.660 \text{ lb}$$

$$\searrow + \Sigma F_{x'} = ma_{x'}; \qquad 10\sin 30° - \mu_k(8.660) = \frac{10}{32.2}(0)$$

$$\mu_k = 0.5774$$

Using the results of μ_k and referring to Fig. (b),

$$+\nearrow \Sigma F_{y'} = ma_{y'}; \qquad N' - 10\cos 45° = \frac{10}{32.2}(0)$$

$$N' = 7.071 \text{ lb}$$

$$\searrow + \Sigma F_{x'} = ma_{x'}; \qquad 10\sin 45° - 0.5774(7.071) = \frac{10}{32.2}a$$

$$a = 9.62 \text{ ft/s}^2 \qquad \textbf{Ans.}$$

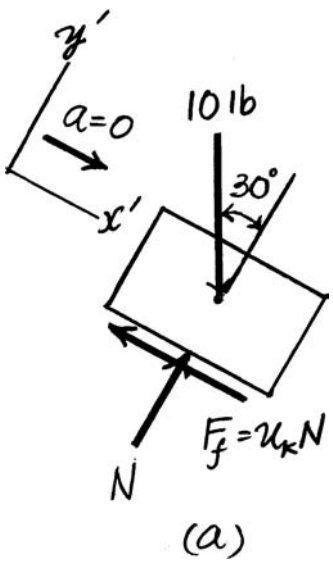

(a)

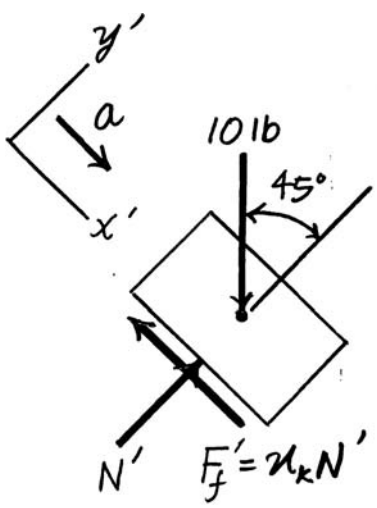

(b)

© 2010 Pearson Education, Inc., Upper Saddle River, NJ. All rights reserved. This material is protected under all copyright laws as they currently exist. No portion of this material may be reproduced, in any form or by any means, without permission in writing from the publisher.

•13–9. Each of the three barges has a mass of 30 Mg, whereas the tugboat has a mass of 12 Mg. As the barges are being pulled forward with a constant velocity of 4 m/s, the tugboat must overcome the frictional resistance of the water, which is 2 kN for each barge and 1.5 kN for the tugboat. If the cable between A and B breaks, determine the acceleration of the tugboat.

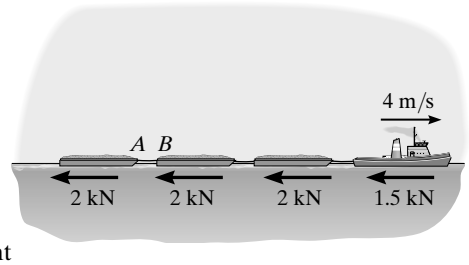

Equations of Motion: When the tugboat and barges are travelling at a constant velocity, the driving force F can be determined by applying Eq. 13–7.

$$\xrightarrow{+} \Sigma F_x = ma_x; \qquad F - 1.5 - 2 - 2 = 0 \qquad F = 7.50 \text{ kN}$$

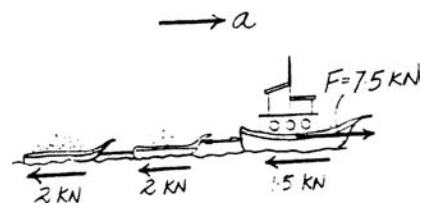

If the cable between barge A and B breaks and the driving force F remains the same, the acceleration of the tugboat and barge is given by

$$\xrightarrow{+} \Sigma F_x = ma_x; \qquad (7.50 - 1.5 - 2 - 2)\left(10^3\right) = (12\,000 + 30\,000 + 3000)a$$

$$a = 0.0278 \text{ m/s}^2 \qquad \textbf{Ans.}$$

13–10. The crate has a mass of 80 kg and is being towed by a chain which is always directed at 20° from the horizontal as shown. If the magnitude of **P** is increased until the crate begins to slide, determine the crate's initial acceleration if the coefficient of static friction is $\mu_s = 0.5$ and the coefficient of kinetic friction is $\mu_k = 0.3$.

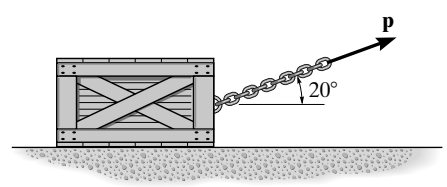

Equations of Equilibrium: If the crate is on the verge of slipping, $F_f = \mu_s N = 0.5N$. From FBD(a),

$$+\uparrow \Sigma F_y = 0; \qquad N + P \sin 20° - 80(9.81) = 0 \qquad \textbf{(1)}$$

$$\xrightarrow{+} \Sigma F_x = 0; \qquad P \cos 20° - 0.5N = 0 \qquad \textbf{(2)}$$

Solving Eqs.(1) and (2) yields

$$P = 353.29 \text{ N} \qquad N = 663.97 \text{ N}$$

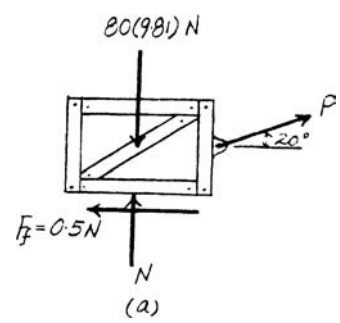

Equations of Motion: The friction force developed between the crate and its contacting surface is $F_f = \mu_k N = 0.3N$ since the crate is moving. From FBD(b),

$$+\uparrow \Sigma F_y = ma_y; \qquad N - 80(9.81) + 353.29 \sin 20° = 80(0)$$

$$N = 663.97 \text{ N}$$

$$\xrightarrow{+} \Sigma F_x = ma_x; \qquad 353.29 \cos 20° - 0.3(663.97) = 80a$$

$$a = 1.66 \text{ m/s}^2 \qquad \textbf{Ans.}$$

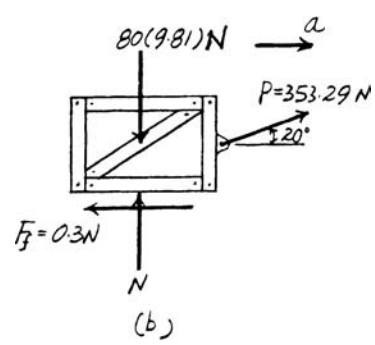

© 2010 Pearson Education, Inc., Upper Saddle River, NJ. All rights reserved. This material is protected under all copyright laws as they currently exist. No portion of this material may be reproduced, in any form or by any means, without permission in writing from the publisher.

13–11. The crate has a mass of 80 kg and is being towed by a chain which is always directed at 20° from the horizontal as shown. Determine the crate's acceleration in $t = 2$ s if the coefficient of static friction is $\mu_s = 0.4$, the coefficient of kinetic friction is $\mu_k = 0.3$, and the towing force is $P = (90t^2)$ N, where t is in seconds.

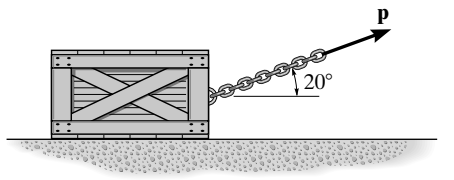

Equations of Equilibrium: At $t = 2$ s, $P = 90\left(2^2\right) = 360$ N. From FBD(a)

$+\uparrow \Sigma F_y = 0; \qquad N + 360 \sin 20° - 80(9.81) = 0 \qquad N = 661.67 \text{ N}$

$\overset{+}{\rightarrow} \Sigma F_x = 0; \qquad 360 \cos 20° - F_f = 0 \qquad F_f = 338.29\text{N}$

Since $F_f > (F_f)_{\max} = \mu_s N = 0.4(661.67) = 264.67$ N, the crate accelerates.

Equations of Motion: The friction force developed between the crate and its contacting surface is $F_f = \mu_k N = 0.3N$ since the crate is moving. From FBD(b),

$+\uparrow \Sigma F_y = ma_y; \qquad N - 80(9.81) + 360 \sin 20° = 80(0)$

$N = 661.67 \text{ N}$

$\overset{+}{\rightarrow} \Sigma F_x = ma_x; \qquad 360 \cos 20° - 0.3(661.67) = 80a$

$a = 1.75 \text{ m/s}^2$ **Ans.**

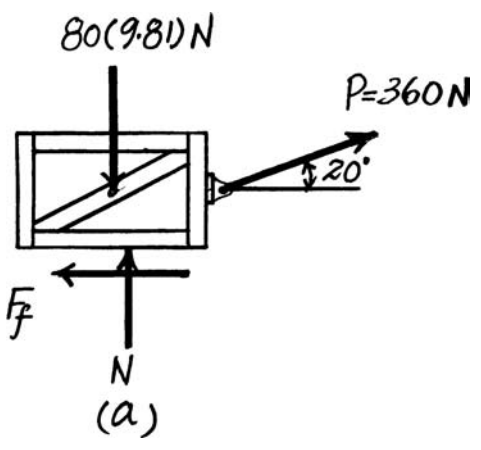

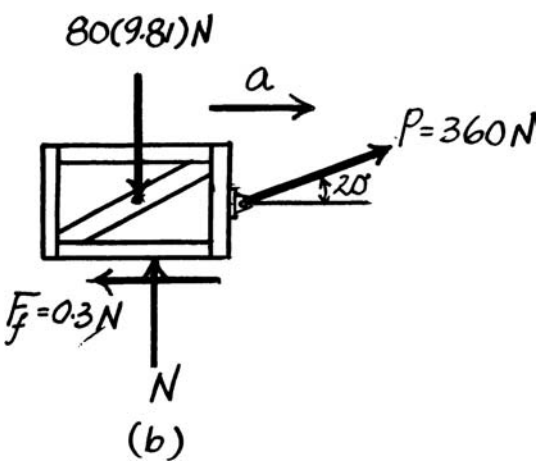

© 2010 Pearson Education, Inc., Upper Saddle River, NJ. All rights reserved. This material is protected under all copyright laws as they currently exist. No portion of this material may be reproduced, in any form or by any means, without permission in writing from the publisher.

***13–12.** Determine the acceleration of the system and the tension in each cable. The inclined plane is smooth, and the coefficient of kinetic friction between the horizontal surface and block C is $(\mu_k)_C = 0.2$.

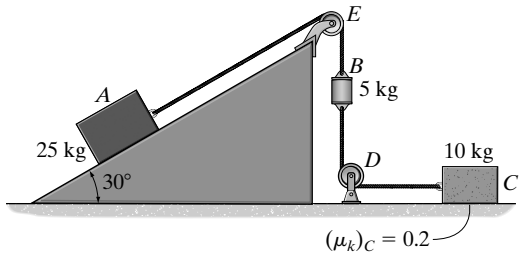

Free-Body Diagram: The free-body diagram of block A, cylinder B, and block C are shown in Figs. (a), (b), and (c), respectively. The frictional force $(F_f)_C = (\mu_k)_C N_C = 0.2N_C$ must act to the right to oppose the motion of block C which is to the left.

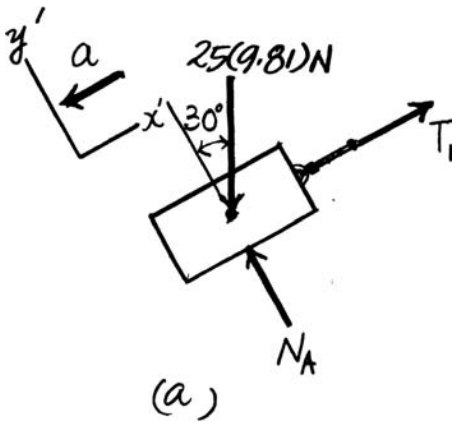

Equations of Motion: Since block A, cylinder B, and block C move together as a single unit, they share a common acceleration **a**. By referring to Figs. (a), (b), and (c),

$$\Sigma F_{x'} = ma_{x'}; \qquad T_1 - 25(9.81)\sin 30° = 25(-a) \qquad \textbf{(1)}$$

and

$$+\uparrow \Sigma F_y = ma_y; \qquad T_1 - T_2 - 5(9.81) = 5(a) \qquad \textbf{(2)}$$

and

$$+\uparrow \Sigma F_y = ma_y; \qquad N_C - 10(9.81) = 10(0)$$

$$N_C = 98.1 \text{ N}$$

$$\overset{+}{\rightarrow} \Sigma F_x = ma_x; \qquad -T_2 + 0.2(98.1) = 10(-a) \qquad \textbf{(3)}$$

Solving Eqs. (1), (2), and (3), yields

$$a = 1.349 \text{ m/s}^2 \qquad T_1 = 88.90 \text{ N} = 88.9\text{N} \qquad \textbf{Ans.}$$

$$T_2 = 33.11 \text{ N} = 33.1 \text{ N} \qquad \textbf{Ans.}$$

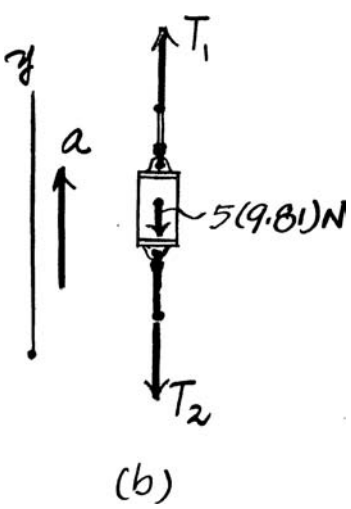

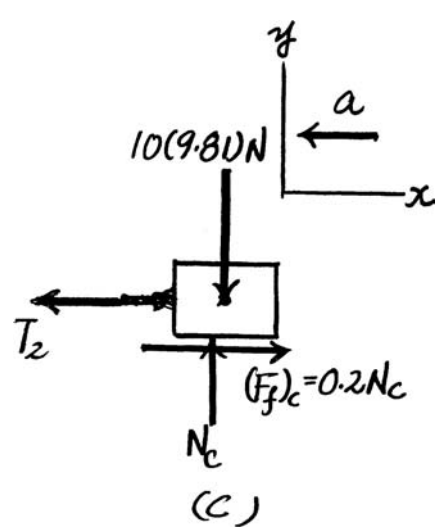

© 2010 Pearson Education, Inc., Upper Saddle River, NJ. All rights reserved. This material is protected under all copyright laws as they currently exist. No portion of this material may be reproduced, in any form or by any means, without permission in writing from the publisher.

•13–13. The two boxcars A and B have a weight of 20 000 lb and 30 000 lb, respectively. If they coast freely down the incline when the brakes are applied to all the wheels of car A causing it to skid, determine the force in the coupling C between the two cars. The coefficient of kinetic friction between the wheels of A and the tracks is $\mu_k = 0.5$. The wheels of car B are free to roll. Neglect their mass in the calculation. *Suggestion:* Solve the problem by representing single resultant normal forces acting on A and B, respectively.

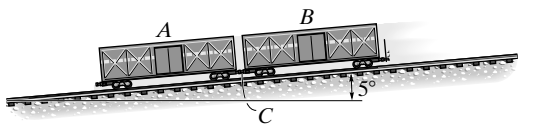

Car A:

$$+\nwarrow \Sigma F_y = 0; \qquad N_A - 20\,000 \cos 5° = 0 \qquad N_A = 19\,923.89 \text{ lb}$$

$$+\nearrow \Sigma F_x = ma_x; \qquad 0.5(19\,923.89) - T - 20\,000 \sin 5° = \left(\frac{20\,000}{32.2}\right)a \qquad \textbf{(1)}$$

Both cars:

$$+\nearrow \Sigma F_x = ma_x; \qquad 0.5(19\,923.89) - 50\,000 \sin 5° = \left(\frac{50\,000}{32.2}\right)a$$

Solving,

$a = 3.61 \text{ ft/s}^2$

$T = 5.98 \text{ kip}$ **Ans.**

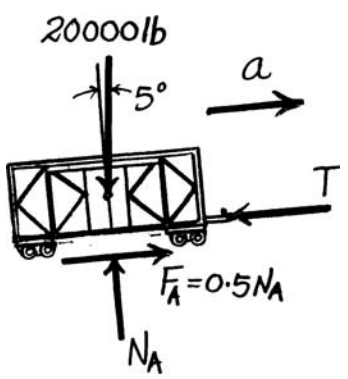

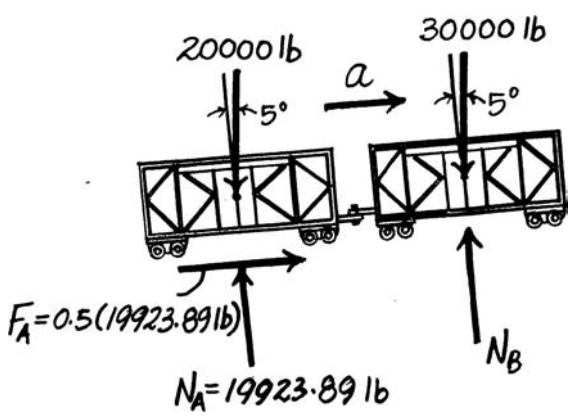

© 2010 Pearson Education, Inc., Upper Saddle River, NJ. All rights reserved. This material is protected under all copyright laws as they currently exist. No portion of this material may be reproduced, in any form or by any means, without permission in writing from the publisher.

13–14. The 3.5-Mg engine is suspended from a spreader beam AB having a negligible mass and is hoisted by a crane which gives it an acceleration of 4 m/s^2 when it has a velocity of 2 m/s. Determine the force in chains CA and CB during the lift.

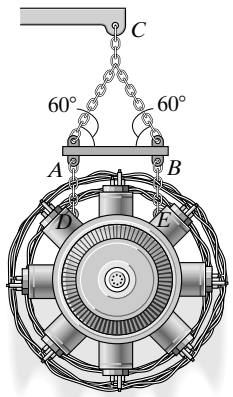

System:

$$+\uparrow \Sigma F_y = ma_y; \qquad T' - 3.5\left(10^3\right)(9.81) = 3.5\left(10^3\right)(4)$$

$$T' = 48.335 \text{ kN}$$

Joint C:

$$+\uparrow \Sigma F_y = ma_y; \qquad 48.335 - 2\,T\cos 30^\circ = 0$$

$$T = T_{CA} = T_{CB} = 27.9 \text{ kN}$$ **Ans.**

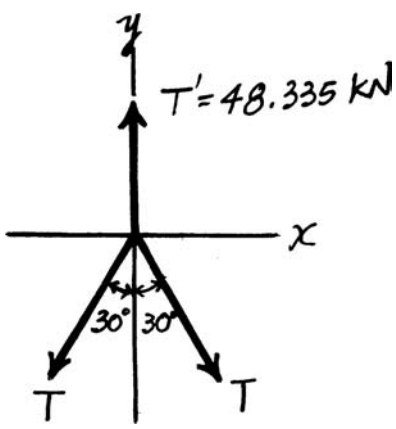

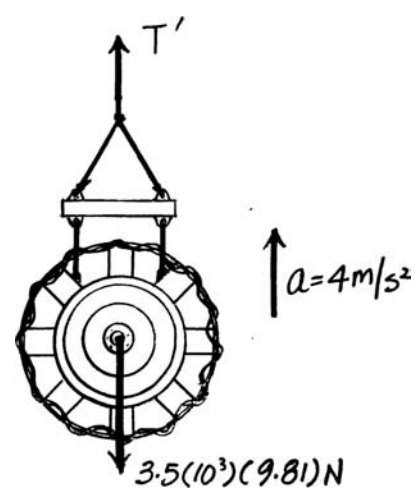

13–15. The 3.5-Mg engine is suspended from a spreader beam having a negligible mass and is hoisted by a crane which exerts a force of 40 kN on the hoisting cable. Determine the distance the engine is hoisted in 4 s, starting from rest.

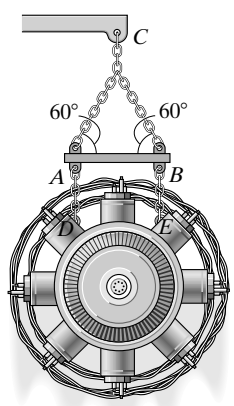

System:

$$+\uparrow \Sigma F_y = ma_y; \qquad 40\left(10^3\right) - 3.5\left(10^3\right)(9.81) = 3.5\left(10^3\right)a$$

$$a = 1.619 \text{ m/s}^2$$

$$\left(+\uparrow\right) \qquad s = s_0 + v_0 t + \frac{1}{2} a_c t^2$$

$$s = 0 + 0 + \frac{1}{2}(1.619)(4)^2 = 12.9 \text{ m}$$ **Ans.**

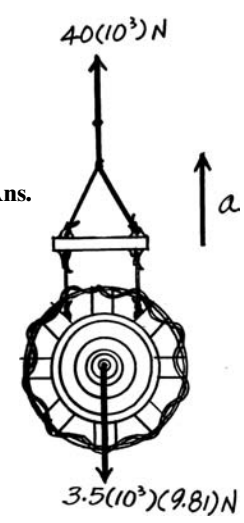

© 2010 Pearson Education, Inc., Upper Saddle River, NJ. All rights reserved. This material is protected under all copyright laws as they currently exist. No portion of this material may be reproduced, in any form or by any means, without permission in writing from the publisher.

***13–16.** The man pushes on the 60-lb crate with a force **F**. The force is always directed down at 30° from the horizontal as shown, and its magnitude is increased until the crate begins to slide. Determine the crate's initial acceleration if the coefficient of static friction is $\mu_s = 0.6$ and the coefficient of kinetic friction is $\mu_k = 0.3$.

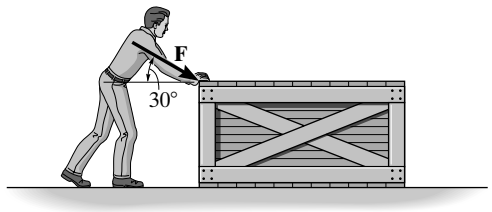

Force to produce motion:

$\xrightarrow{+} \Sigma F_x = 0; \qquad F\cos 30° - 0.6N = 0$

$+\uparrow \Sigma F_y = 0; \qquad N - 60 - F\sin 30° = 0$

$N = 91.80 \text{ lb} \qquad F = 63.60 \text{ lb}$

Since $N = 91.80$ lb,

$\xrightarrow{+} \Sigma F_x = ma_x; \qquad 63.60\cos 30° - 0.3(91.80) = \left(\frac{60}{32.2}\right)a$

$a = 14.8 \text{ ft/s}^2$ **Ans.**

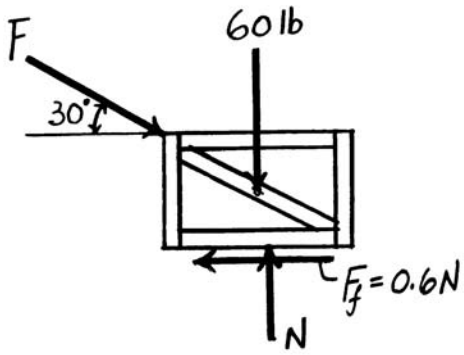

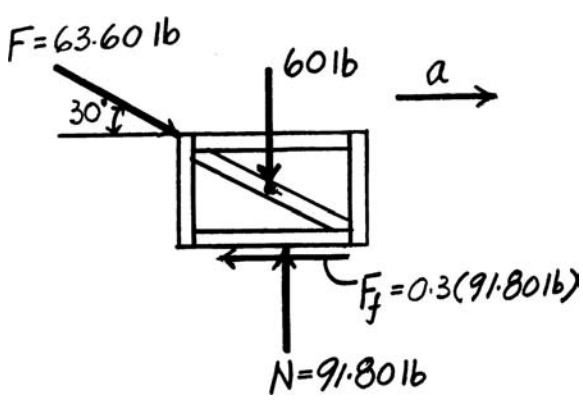

© 2010 Pearson Education, Inc., Upper Saddle River, NJ. All rights reserved. This material is protected under all copyright laws as they currently exist. No portion of this material may be reproduced, in any form or by any means, without permission in writing from the publisher.

•13–17. A force of $F = 15$ lb is applied to the cord. Determine how high the 30-lb block A rises in 2 s starting from rest. Neglect the weight of the pulleys and cord.

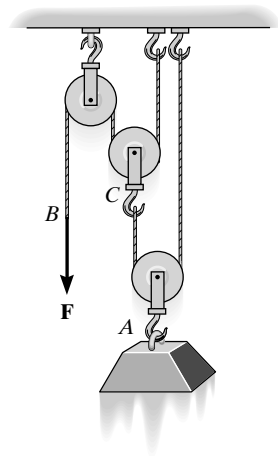

Block:

$$+\uparrow \Sigma F_y = ma_y; \qquad -30 + 60 = \left(\frac{30}{32.2}\right)a_A$$

$$a_A = 32.2 \text{ ft/s}^2$$

$$(+\uparrow) \qquad s = s_0 + v_0 t + \frac{1}{2} a_c t^2$$

$$s = 0 + 0 + \frac{1}{2}(32.2)(2)^2$$

$$s = 64.4 \text{ ft}$$ **Ans.**

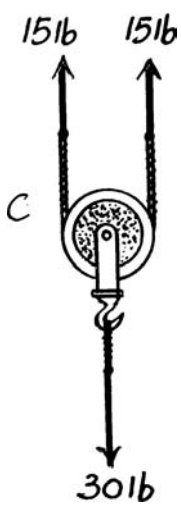

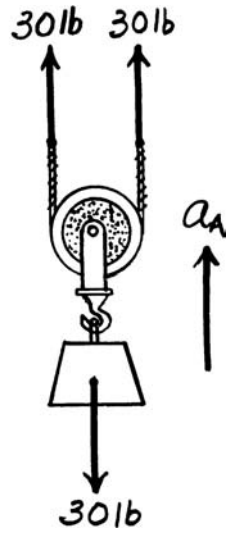

© 2010 Pearson Education, Inc., Upper Saddle River, NJ. All rights reserved. This material is protected under all copyright laws as they currently exist. No portion of this material may be reproduced, in any form or by any means, without permission in writing from the publisher.

13–18. Determine the constant force **F** which must be applied to the cord in order to cause the 30-lb block A to have a speed of 12 ft/s when it has been displaced 3 ft upward starting from rest. Neglect the weight of the pulleys and cord.

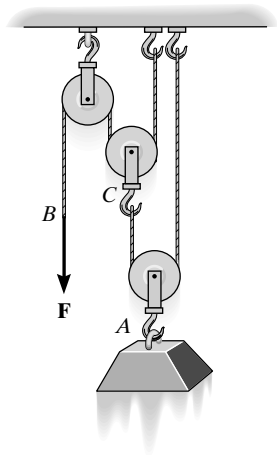

$(+\uparrow)$ $\quad v^2 = v_0^2 + 2a_c(s - s_0)$

$(12)^2 = 0 + 2(a)(3)$

$a = 24 \text{ ft/s}^2$

$+\uparrow \Sigma F_y = ma_y; \qquad -30 + 4F = \left(\frac{30}{32.2}\right)(24)$

$F = 13.1 \text{ lb}$ **Ans.**

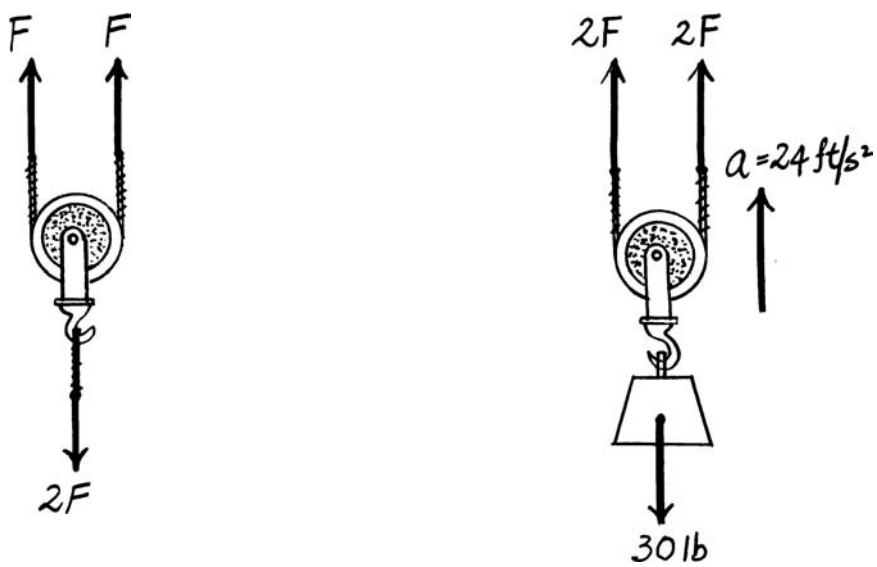

© 2010 Pearson Education, Inc., Upper Saddle River, NJ. All rights reserved. This material is protected under all copyright laws as they currently exist. No portion of this material may be reproduced, in any form or by any means, without permission in writing from the publisher.

13–19. The 800-kg car at B is connected to the 350-kg car at A by a spring coupling. Determine the stretch in the spring if (a) the wheels of both cars are free to roll and (b) the brakes are applied to all four wheels of car B, causing the wheels to skid. Take $(\mu_k)_B = 0.4$. Neglect the mass of the wheels.

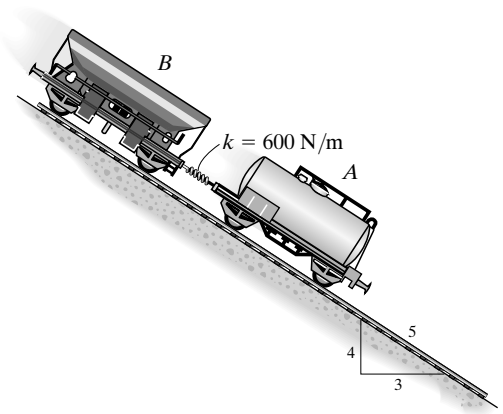

a) Equations of Motion: Applying Eq. 13–7 to FBD(a), we have

$$\searrow + \Sigma F_{x'} = ma_{x'}; \qquad (800 + 350)(9.81)\sin 53.13° = (800 + 350)a$$

$$a = 7.848 \text{ m/s}^2$$

For FBD(b),

$$\searrow + \Sigma F_{x'} = ma_{x'}; \qquad 350(9.81)\sin 53.13° + F_{sp} = 350(7.848)$$

$$F_{sp} = 0$$

The stretch of spring is given by

$$x = \frac{F_{sp}}{k} = 0 \qquad \textbf{Ans.}$$

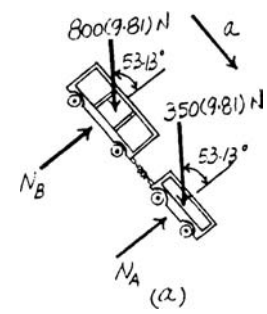

b) Equations of Motion: The friction force developed between the wheels of car B and the inclined plane is $(F_f)_B = (\mu_k)_B N_B = 0.4N_B$. For car B only [FBD(c)],

$$+\nearrow \Sigma F_{y'} = ma_{y'}; \qquad N_B - 800(9.81)\cos 53.13° = 800(0)$$

$$N_B = 4708.8 \text{ N}$$

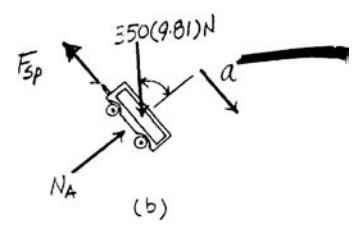

For the whole system (FBD(c)],

$$\searrow + \Sigma F_{x'} = ma_{x'}; \qquad (800 + 350)(9.81)\sin 53.13° - 0.4(4708.8) = (800 + 350)a$$

$$a = 6.210 \text{ m/s}^2$$

For FBD(b),

$$\searrow + \Sigma F_{x'} = ma_{x'}; \qquad 350(9.81)\sin 53.13° - F_{sp} = 350(6.210)$$

$$F_{sp} = 573.25 \text{ N}$$

The stretch of spring is given by

$$x = \frac{F_{sp}}{k} = \frac{573.25}{600} = 0.955 \text{ m} \qquad \textbf{Ans.}$$

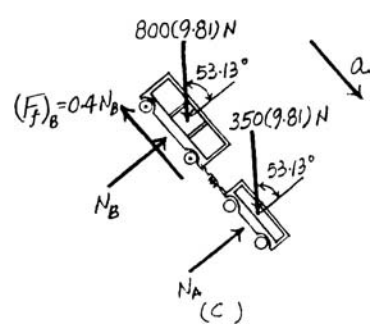

© 2010 Pearson Education, Inc., Upper Saddle River, NJ. All rights reserved. This material is protected under all copyright laws as they currently exist. No portion of this material may be reproduced, in any form or by any means, without permission in writing from the publisher.

***13–20.** The 10-lb block A travels to the right at $v_A = 2$ ft/s at the instant shown. If the coefficient of kinetic friction is $\mu_k = 0.2$ between the surface and A, determine the velocity of A when it has moved 4 ft. Block B has a weight of 20 lb.

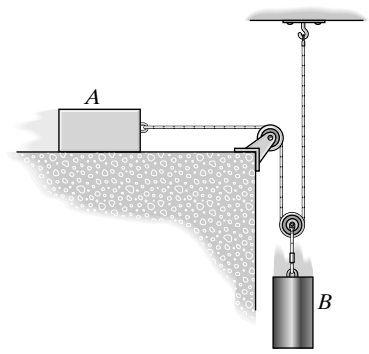

Block A:

$$\overset{+}{\leftarrow} \Sigma F_x = ma_x; \qquad -T + 2 = \left(\frac{10}{32.2}\right)a_A \qquad \textbf{(1)}$$

Weight B:

$$+\downarrow \Sigma F_y = ma_y; \qquad 20 - 2T = \left(\frac{20}{32.2}\right)a_B \qquad \textbf{(2)}$$

Kinematics:

$$s_A + 2s_B = l$$

$$a_A = -2a_B \qquad \textbf{(3)}$$

Solving Eqs. (1)–(3):

$a_A = -17.173\ \text{ft/s}^2 \qquad a_B = 8.587\ \text{ft/s}^2 \qquad T = 7.33$ lb

$v^2 = v_0^2 + 2a_c(s - s_0)$

$v^2 = (2)^2 + 2(17.173)(4 - 0)$

$v = 11.9$ ft/s **Ans.**

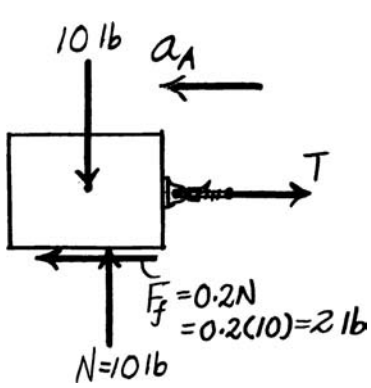

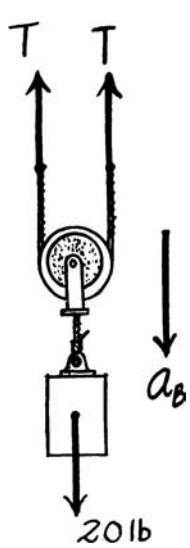

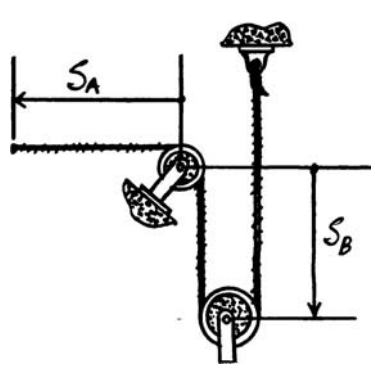

© 2010 Pearson Education, Inc., Upper Saddle River, NJ. All rights reserved. This material is protected under all copyright laws as they currently exist. No portion of this material may be reproduced, in any form or by any means, without permission in writing from the publisher.

•13–21. Block B has a mass m and is released from rest when it is on top of cart A, which has a mass of $3m$. Determine the tension in cord CD needed to hold the cart from moving while B slides down A. Neglect friction.

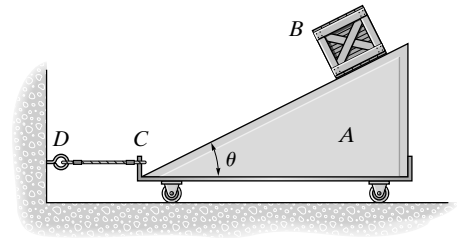

Block B:

$+\nwarrow \Sigma F_y = ma_y;\qquad N_B - mg\cos\theta = 0$

$N_B = mg\cos\theta$

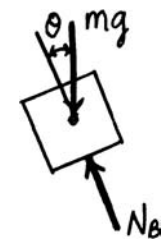

Cart:

$\overset{+}{\rightarrow} \Sigma F_x = ma_x;\qquad -T + N_B\sin\theta = 0$

$T = mg\sin\theta\cos\theta$

$T = \left(\frac{mg}{2}\right)\sin 2\theta$ **Ans.**

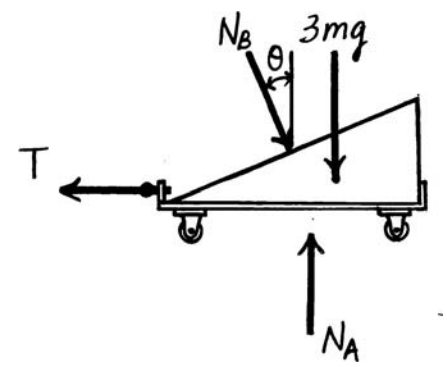

13–22. Block B has a mass m and is released from rest when it is on top of cart A, which has a mass of $3m$. Determine the tension in cord CD needed to hold the cart from moving while B slides down A. The coefficient of kinetic friction between A and B is μ_k.

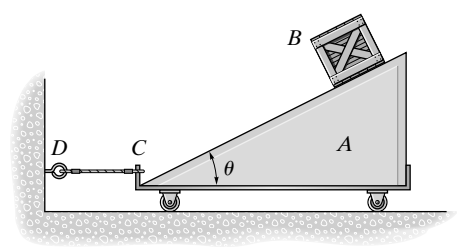

Block B:

$+\nwarrow \Sigma F_y = ma_y;\qquad N_B - mg\cos\theta = 0$

$N_B = mg\cos\theta$

Cart:

$\overset{+}{\rightarrow} \Sigma F_x = ma_x;\qquad -T + N_B\sin\theta - \mu_k N_B\cos\theta = 0$

$T = mg\cos\theta(\sin\theta - \mu_k\cos\theta)$ **Ans.**

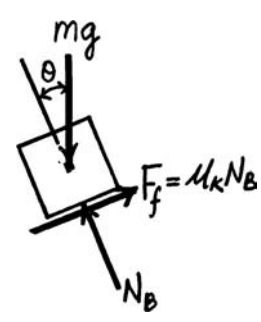

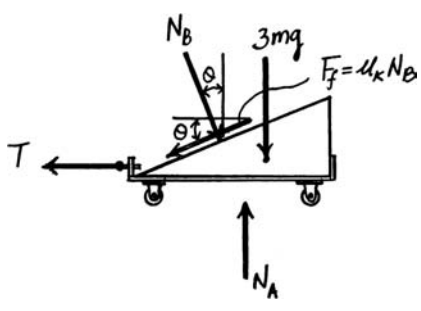

© 2010 Pearson Education, Inc., Upper Saddle River, NJ. All rights reserved. This material is protected under all copyright laws as they currently exist. No portion of this material may be reproduced, in any form or by any means, without permission in writing from the publisher.

13–23. The 2-kg shaft CA passes through a smooth journal bearing at B. Initially, the springs, which are coiled loosely around the shaft, are unstretched when no force is applied to the shaft. In this position $s = s' = 250$ mm and the shaft is at rest. If a horizontal force of $F = 5$ kN is applied, determine the speed of the shaft at the instant $s = 50$ mm, $s' = 450$ mm. The ends of the springs are attached to the bearing at B and the caps at C and A.

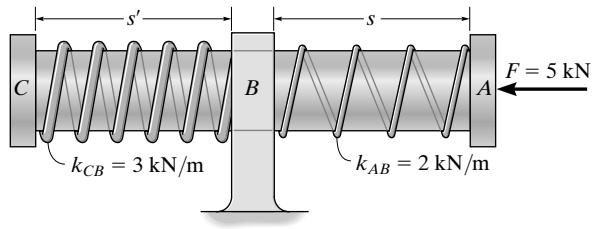

$F_{CB} = k_{CB}x = 3000x \qquad F_{AB} = k_{AB}x = 2000x$

$\overset{+}{\leftarrow} \Sigma F_x = ma_x; \qquad 5000 - 3000x - 2000x = 2a$

$2500 - 2500x = a$

$a\,dx = v\,dv$

$$\int_0^{0.2} (2500 - 2500x)\,dx = \int_0^v v\,dv$$

$$2500(0.2) - \left(\frac{2500(0.2)^2}{2}\right) = \frac{v^2}{2}$$

$v = 30$ m/s **Ans.**

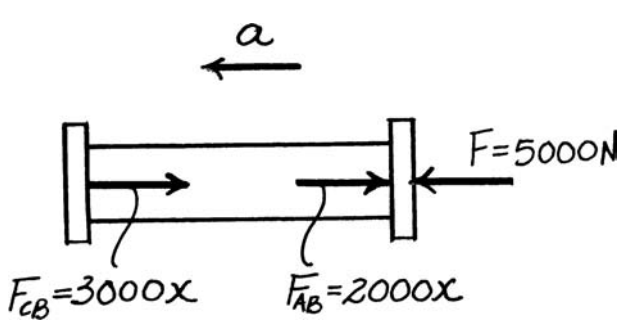

© 2010 Pearson Education, Inc., Upper Saddle River, NJ. All rights reserved. This material is protected under all copyright laws as they currently exist. No portion of this material may be reproduced, in any form or by any means, without permission in writing from the publisher.

***13–24.** If the force of the motor M on the cable is shown in the graph, determine the velocity of the cart when $t = 3$ s. The load and cart have a mass of 200 kg and the car starts from rest.

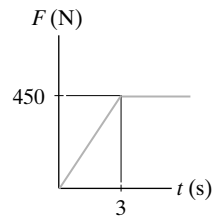

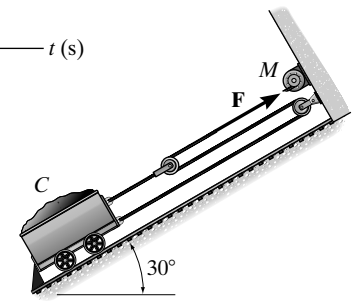

Free-Body Diagram: The free-body diagram of the rail car is shown in Fig. (a).

Equations of Motion: For $0 \le t < 3$ s, $F = \frac{450}{3}t = (150t)$ N. By referring to Fig. (a), we can write

$$+\nearrow \Sigma F_{x'} = ma_{x'}; \qquad 3(150t) - 200(9.81)\sin 30° = 200a$$

$$a = (2.25t - 4.905)\ \text{m/s}^2$$

For $t > 3$ s, $F = 450$ N. Thus,

$$+\nearrow \Sigma F_{x'} = ma_{x'}; \qquad 3(450) - 200(9.81)\sin 30° = 200a$$

$$a = 1.845\ \text{m/s}^2$$

Equilibrium: For the rail car to move, force **3F** must overcome the weight component of the rail crate. Thus, the time required to move the rail car is given by

$$\Sigma F_{x'} = 0; \quad 3(150t) - 200(9.81)\sin 30° = 0 \qquad t = 2.18\ \text{s}$$

Kinematics: The velocity of the rail car can be obtained by integrating the kinematic equation, $dv = adt$. For $2.18\ \text{s} \le t < 3$ s, $v = 0$ at $t = 2.18$ s will be used as the integration limit. Thus,

$$(+\uparrow) \qquad \int dv = \int adt$$

$$\int_0^v dv = \int_{2.18\ \text{s}}^t (2.25t - 4.905)dt$$

$$v = \left(1.125t^2 - 4.905t\right)\Big|_{2.18\ \text{s}}^t$$

$$= \left(1.125t^2 - 4.905t + 5.34645\right)\text{m/s}$$

When $t = 3$ s,

$$v = 1.125(3)^2 - 4.905(3) + 5.34645 = 0.756\text{m/s} \qquad \textbf{Ans.}$$

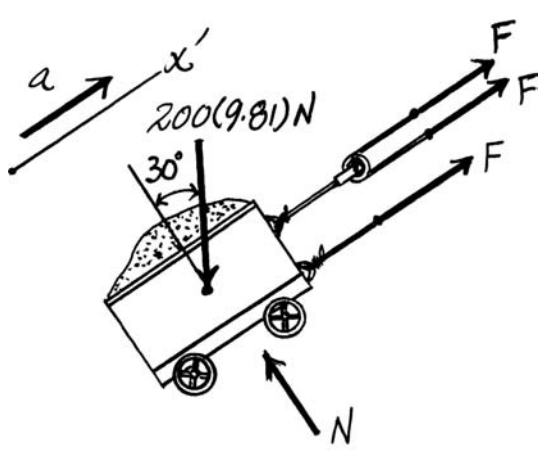

(a)

© 2010 Pearson Education, Inc., Upper Saddle River, NJ. All rights reserved. This material is protected under all copyright laws as they currently exist. No portion of this material may be reproduced, in any form or by any means, without permission in writing from the publisher.

•13–25. If the motor draws in the cable with an acceleration of $3\,\text{m/s}^2$, determine the reactions at the supports A and B. The beam has a uniform mass of 30 kg/m, and the crate has a mass of 200 kg. Neglect the mass of the motor and pulleys.

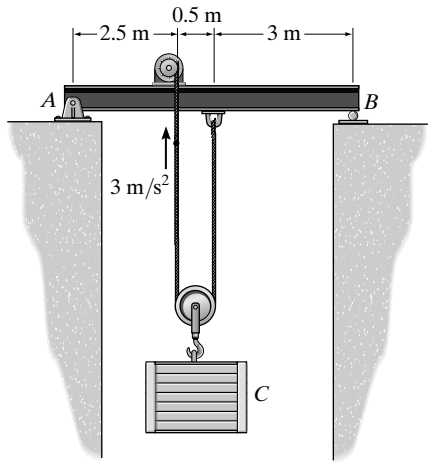

$+\searrow \Sigma F_t = ma_t\,;\qquad mg\sin\theta = ma_t \qquad a_t = g\sin\theta$

$$v\,dv = a_t\,ds = g\sin\theta\,ds \qquad \text{However } dy = ds\sin\theta$$

$$\int_0^v v\,dv = \int_0^h g\,dy$$

$$\frac{v^2}{2} = gh$$

$$v = \sqrt{2gh}$$

Q.E.D.

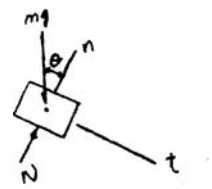

13–26. A freight elevator, including its load, has a mass of 500 kg. It is prevented from rotating by the track and wheels mounted along its sides. When $t = 2$ s, the motor M draws in the cable with a speed of 6 m/s, *measured relative to the elevator.* If it starts from rest, determine the constant acceleration of the elevator and the tension in the cable. Neglect the mass of the pulleys, motor, and cables.

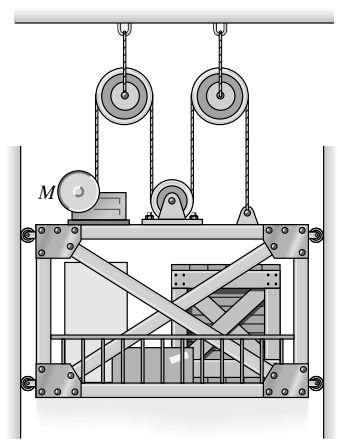

$3s_E + s_P = l$

$3v_E = -v_P$

$(+\downarrow)\qquad v_P = v_E + v_{P/E}$

$$-3v_E = v_E + 6$$

$$v_E = -\frac{6}{4} = -1.5\text{ m/s} = 1.5\text{ m/s}\uparrow$$

$(+\uparrow)\qquad v = v_0 + a_c t$

$$1.5 = 0 + a_E(2)$$

$$a_E = 0.75\text{ m/s}^2\uparrow \qquad \textbf{Ans.}$$

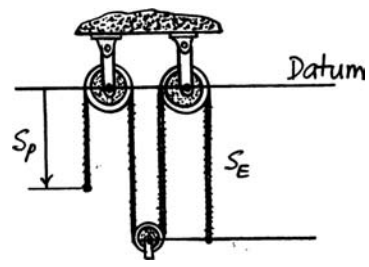

$+\uparrow \Sigma F_y = ma_y\,;\qquad 4T - 500(9.81) = 500(0.75)$

$$T = 1320\text{ N} = 1.32\text{ kN} \qquad \textbf{Ans.}$$

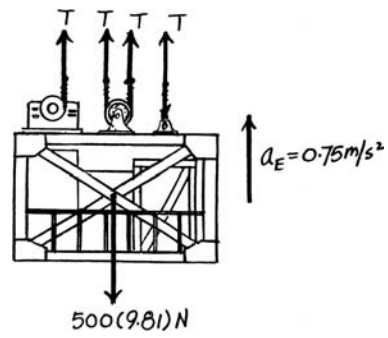

© 2010 Pearson Education, Inc., Upper Saddle River, NJ. All rights reserved. This material is protected under all copyright laws as they currently exist. No portion of this material may be reproduced, in any form or by any means, without permission in writing from the publisher.

13–27. Determine the required mass of block A so that when it is released from rest it moves the 5-kg block B a distance of 0.75 m up along the smooth inclined plane in $t = 2$ s. Neglect the mass of the pulleys and cords.

Kinematic: Applying equation $s = s_0 + v_0 t + \frac{1}{2} a_c t^2$, we have

$$(\nwarrow +) \qquad 0.75 = 0 + 0 + \frac{1}{2} a_B \left(2^2\right) \qquad a_B = 0.375 \text{ m/s}^2$$

Establishing the position - coordinate equation, we have

$$2s_A + (s_A - s_B) = l \qquad 3s_A - s_B = l$$

Taking time derivative twice yields

$$3a_A - a_B = 0 \qquad \textbf{(1)}$$

From Eq.(1),

$$3a_A - 0.375 = 0 \qquad a_A = 0.125 \text{ m/s}^2$$

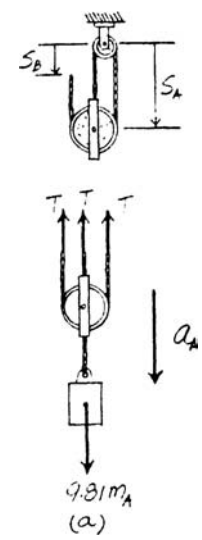

Equation of Motion: The tension T developed in the cord is the same throughout the entire cord since the cord passes over the smooth pulleys. From FBD(b),

$$\nwarrow + \Sigma F_{y'} = ma_{y'}; \qquad T - 5(9.81)\sin 60^\circ = 5(0.375)$$

$$T = 44.35 \text{ N}$$

From FBD(a),

$$+\uparrow \Sigma F_y = ma_y; \qquad 3(44.35) - 9.81 m_A = m_A(-0.125)$$

$$m_A = 13.7 \text{ kg} \qquad \textbf{Ans.}$$

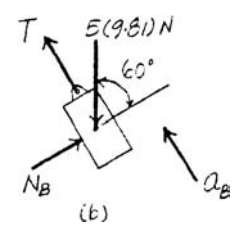

© 2010 Pearson Education, Inc., Upper Saddle River, NJ. All rights reserved. This material is protected under all copyright laws as they currently exist. No portion of this material may be reproduced, in any form or by any means, without permission in writing from the publisher.

***13–28.** Blocks A and B have a mass of m_A and m_B, where $m_A > m_B$. If pulley C is given an acceleration of $\mathbf{a}_0$, determine the acceleration of the blocks. Neglect the mass of the pulley.

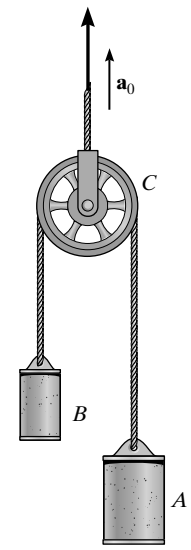

Free-Body Diagram: The free-body diagram of blocks A and B are shown in Figs, (a) and (b), respectively. Here, $\mathbf{a}_A$ and $\mathbf{a}_B$ are assumed to be directed upwards. Since pulley C is smooth, the tension in the cord remains constant for the entire cord.

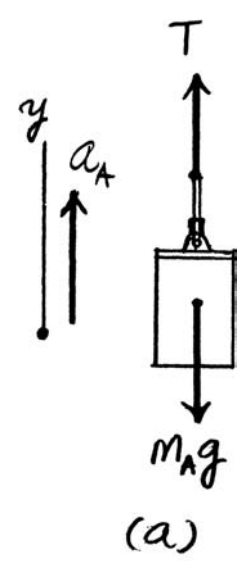

(a)

Equations of Motion: By referring to Figs. (a) and (b),

$$+\uparrow \Sigma F_y = ma_y; \qquad T - m_A g = m_A a_A \qquad \textbf{(1)}$$

and

$$+\uparrow \Sigma F_y = ma_y; \qquad T - m_B g = m_B a_B \qquad \textbf{(2)}$$

Eliminating $\mathbf{T}$ from Eqs. (1) and (2) yields

$$(m_A - m_B)g = m_B a_B - m_A a_A \qquad \textbf{(3)}$$

Kinematics: The acceleration of blocks A and B relative to pulley C will be of the same magnitude, i.e., $a_{A/C} = a_{B/C} = a_{\text{rel}}$. If we assume that $\mathbf{a}_{A/C}$ is directed downwards, $\mathbf{a}_{B/C}$ must also be directed downwards to be consistent. Applying the relative acceleration equation,

$(+\uparrow)$ $$\mathbf{a}_A = \mathbf{a}_C + \mathbf{a}_{A/C}$$

$$a_A = a_O - a_{\text{rel}} \qquad \textbf{(4)}$$

and

$(+\uparrow)$ $$\mathbf{a}_B = \mathbf{a}_C + \mathbf{a}_{B/C}$$

$$a_B = a_O - a_{\text{rel}} \qquad \textbf{(5)}$$

Eliminating a_{rel} from Eqs.(4) and (5),

$$a_A + a_B = 2a_O \qquad \textbf{(6)}$$

Solving Eqs. (3) and (6), yields

$$a_A = \frac{2mg\, a_O - (m_A - m_B)g}{m_A + m_B} \quad \uparrow \qquad \textbf{Ans.}$$

$$a_B = \frac{2m_A a_O + (m_A - m_B)g}{m_A + m_B} \quad \uparrow \qquad \textbf{Ans.}$$

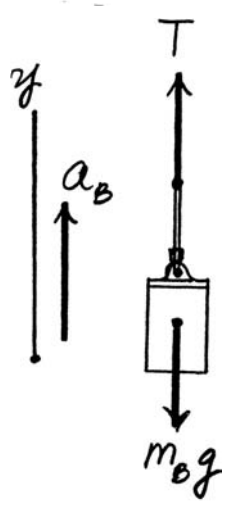

(b)

© 2010 Pearson Education, Inc., Upper Saddle River, NJ. All rights reserved. This material is protected under all copyright laws as they currently exist. No portion of this material may be reproduced, in any form or by any means, without permission in writing from the publisher.

•13–29. The tractor is used to lift the 150-kg load B with the 24-m-long rope, boom, and pulley system. If the tractor travels to the right at a constant speed of 4 m/s, determine the tension in the rope when $s_A = 5$ m. When $s_A = 0$, $s_B = 0$.

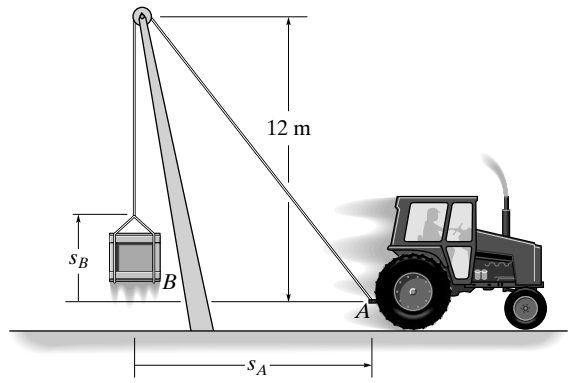

$$12 - s_B + \sqrt{s_A^2 + (12)^2} = 24$$

$$-s_B + \left(s_A^2 + 144\right)^{-\frac{1}{2}}\left(s_A\dot{s}_A\right) = 0$$

$$-\ddot{s}_B - \left(s_A^2 + 144\right)^{-\frac{3}{2}}\left(s_A\dot{s}_A\right)^2 + \left(s_A^2 + 144\right)^{-\frac{1}{2}}\left(\dot{s}_A^2\right) + \left(s_A^2 + 144\right)^{-\frac{1}{2}}\left(s_A\ddot{s}_A\right) = 0$$

$$\ddot{s}_B = -\left[\frac{s_A^2\dot{s}_A^2}{\left(s_A^2 + 144\right)^{\frac{3}{2}}} - \frac{\dot{s}_A^2 + s_A\ddot{s}_A}{\left(s_A^2 + 144\right)^{\frac{1}{2}}}\right]$$

$$a_B = -\left[\frac{(5)^2(4)^2}{((5)^2 + 144)^{\frac{3}{2}}} - \frac{(4)^2 + 0}{((5)^2 + 144)^{\frac{1}{2}}}\right] = 1.0487 \text{ m/s}^2$$

$$+\uparrow \Sigma F_y = ma_y; \qquad T - 150(9.81) = 150(1.0487)$$

$$T = 1.63 \text{ kN} \qquad \textbf{Ans.}$$

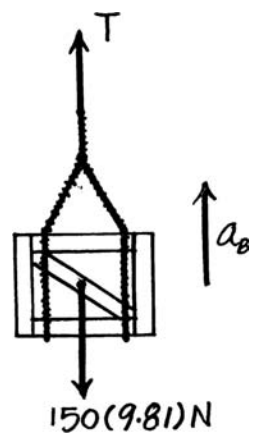

13–30. The tractor is used to lift the 150-kg load B with the 24-m-long rope, boom, and pulley system. If the tractor travels to the right with an acceleration of 3 m/s^2 and has a velocity of 4 m/s at the instant $s_A = 5$ m, determine the tension in the rope at this instant. When $s_A = 0$, $s_B = 0$.

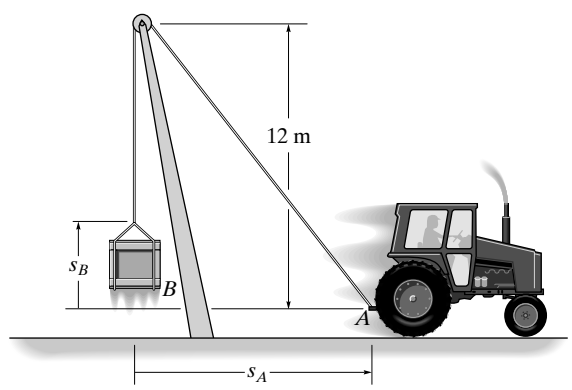

$$12 = s_B + \sqrt{s_A^2 + (12)^2} = 24$$

$$-\dot{s}_B + \frac{1}{2}\left(s_A^2 + 144\right)^{-\frac{3}{2}}\left(2s_A\dot{s}_A\right) = 0$$

$$-\ddot{s}_B - \left(s_A^2 + 144\right)^{-\frac{3}{2}}\left(s_A\dot{s}_A\right)^2 + \left(s_A^2 + 144\right)^{-\frac{1}{2}}\left(\dot{s}_A^2\right) + \left(s_A^2 + 144\right)^{-\frac{1}{2}}\left(s_A\ddot{s}_A\right) = 0$$

$$\ddot{s}_B = -\left[\frac{s_A^2\,\dot{s}_A^2}{\left(s_A^2 + 144\right)^{\frac{3}{2}}} - \frac{\dot{s}_A^2 + s_A\ddot{s}_A}{\left(s_A^2 + 144\right)^{\frac{1}{2}}}\right]$$

$$a_B = -\left[\frac{(5)^2(4)^2}{((5)^2 + 144)^{\frac{3}{2}}} - \frac{(4)^2 + (5)(3)}{((5)^2 + 144)^{\frac{1}{2}}}\right] = 2.2025 \text{ m/s}^2$$

$$+\uparrow \Sigma F_y = ma_y; \qquad T - 150(9.81) = 150(2.2025)$$

$$T = 1.80 \text{ kN} \qquad \textbf{Ans.}$$

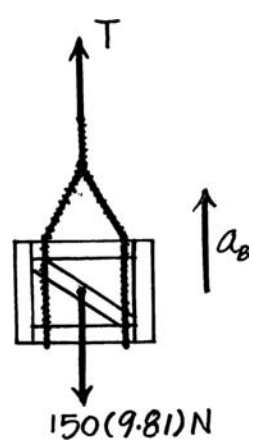

© 2010 Pearson Education, Inc., Upper Saddle River, NJ. All rights reserved. This material is protected under all copyright laws as they currently exist. No portion of this material may be reproduced, in any form or by any means, without permission in writing from the publisher.

13–31. The 75-kg man climbs up the rope with an acceleration of $0.25\,\text{m/s}^2$, measured relative to the rope. Determine the tension in the rope and the acceleration of the 80-kg block.

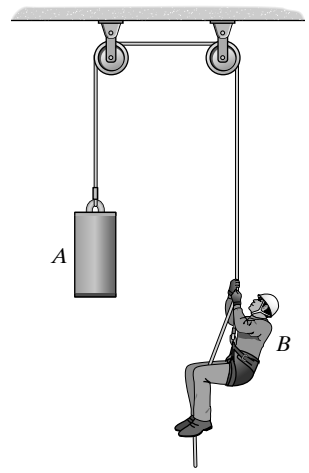

Free-Body Diagram: The free-body diagram of the man and block A are shown in Figs. (a) and (b), respectively. Here, the acceleration of the man a_m and the block a_A are assumed to be directed upwards.

Equations of Motion: By referring to Figs. (a) and (b),

$$+\uparrow \Sigma F_y = ma_y; \qquad T - 75(9.81) = 75a_m \qquad \textbf{(1)}$$

and

$$+\uparrow \Sigma F_y = ma_y; \qquad T - 80(9.81) = 80a_A \qquad \textbf{(2)}$$

Kinematics: Here, the rope has an acceleration with a magnitude equal to that of block A, i.e., $a_r = a_A$ and is directed downward. Applying the relative acceleration equation,

$$(+\uparrow) \qquad \mathbf{a}_m = \mathbf{a}_r + \mathbf{a}_{m/r}$$

$$a_m = -a_A + 0.25 \qquad \textbf{(3)}$$

Solving Eqs. (1), (2), and (3) yields

$$a_A = -0.19548\ \text{m/s}^2 = 0.195\ \text{m/s}^2\downarrow \qquad \textbf{Ans.}$$

$$T = 769.16\ \text{N} = 769\ \text{N} \qquad \textbf{Ans.}$$

$$a_m = 0.4455\ \text{m/s}^2$$

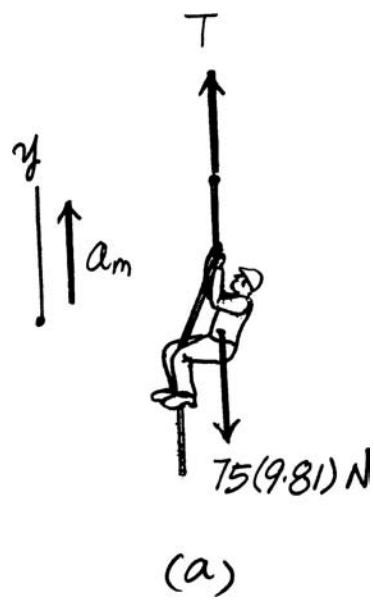

(a)

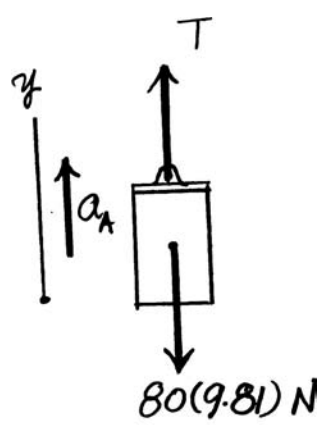

(b)

© 2010 Pearson Education, Inc., Upper Saddle River, NJ. All rights reserved. This material is protected under all copyright laws as they currently exist. No portion of this material may be reproduced, in any form or by any means, without permission in writing from the publisher.

***13–32.** Motor M draws in the cable with an acceleration of $4\,\text{ft/s}^2$, measured relative to the 200-lb mine car. Determine the acceleration of the car and the tension in the cable. Neglect the mass of the pulleys.

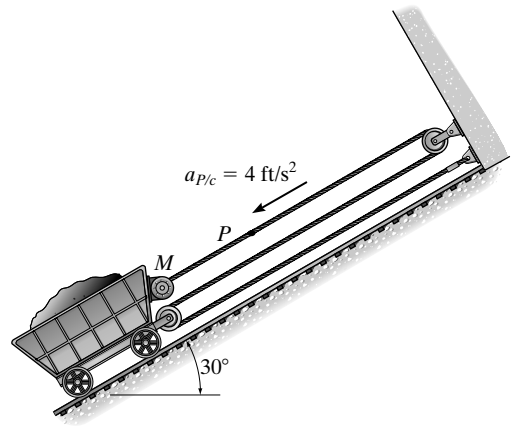

Free-Body Diagram: The free-body diagram of the mine car is shown in Fig. (a). Here, its acceleration $\mathbf{a}_C$ is assumed to be directed down the inclined plane so that it is consistent with the position coordinate s_C of the mine car as indicated on Fig. (b).

Equations of Motion: By referring to Fig. (a),

$$+\nearrow \Sigma F_{x'} = ma_{x'}; \qquad 3T - 200 \sin 30° = \frac{200}{32.2}(-a_C) \qquad \textbf{(1)}$$

Kinematics: We can express the length of the cable in terms of s_P and s_C by referring to Fig. (b).

$$s_P + 2s_C = 0$$

The second derivative of the above equation gives

$$a_P + 2a_C = 0 \qquad \textbf{(2)}$$

Applying the relative acceleration equation,

$$\mathbf{a}_P = \mathbf{a}_C + \mathbf{a}_{P/C}$$

$$a_P = a_C + 4 \qquad \textbf{(3)}$$

Solving Eqs. (1), (2), and (3) yields

$$a_C = -1.333\ \text{ft/s}^2 = 1.33\ \text{ft/s}^2 \qquad \textbf{Ans.}$$

$$T = 36.1\ \text{lb} \qquad \textbf{Ans.}$$

$$a_P = 2.667\ \text{ft/s}^2$$

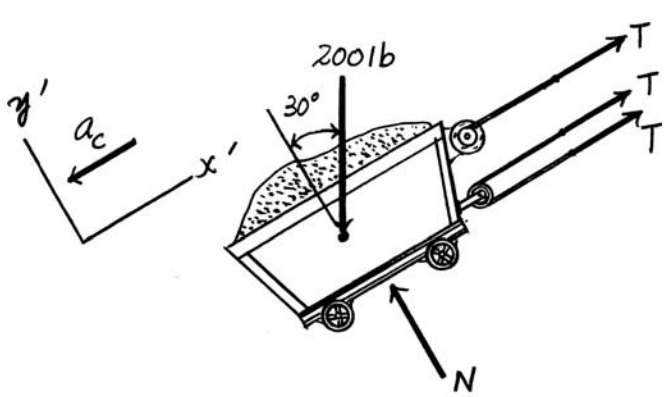

(a)

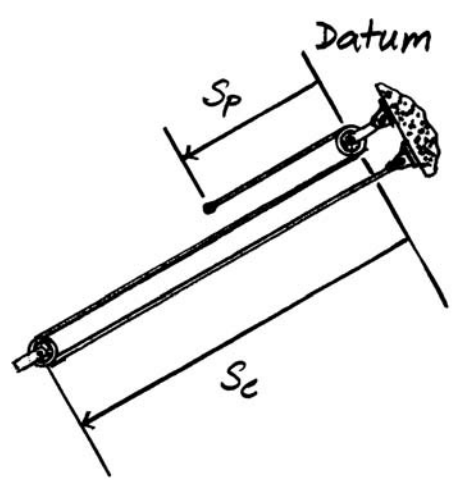

(b)

© 2010 Pearson Education, Inc., Upper Saddle River, NJ. All rights reserved. This material is protected under all copyright laws as they currently exist. No portion of this material may be reproduced, in any form or by any means, without permission in writing from the publisher.

•13–33. The 2-lb collar C fits loosely on the smooth shaft. If the spring is unstretched when $s = 0$ and the collar is given a velocity of 15 ft/s, determine the velocity of the collar when $s = 1$ ft.

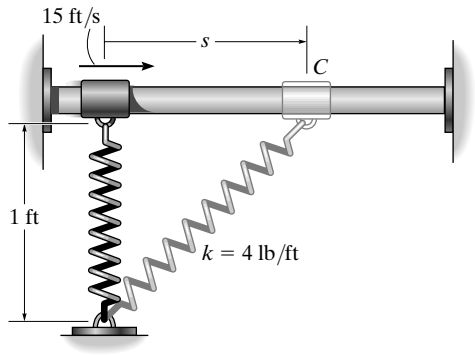

$$F_s = kx; \qquad F_s = 4\left(\sqrt{1 + s^2} - 1\right)$$

$$\xrightarrow{+} \Sigma F_x = ma_x; \qquad -4\left(\sqrt{1 + s^2} - 1\right)\left(\frac{s}{\sqrt{1 + s^2}}\right) = \left(\frac{2}{32.2}\right)\left(v\frac{dv}{ds}\right)$$

$$-\int_0^1 \left(4s\,ds - \frac{4s\,ds}{\sqrt{1 + s^2}}\right) = \int_{15}^{v} \left(\frac{2}{32.2}\right) v\,dv$$

$$-\left[2s^2 - 4\sqrt{1 + s^2}\right]_0^1 = \frac{1}{32.2}\left(v^2 - 15^2\right)$$

$$v = 14.6 \text{ ft/s} \qquad \textbf{Ans.}$$

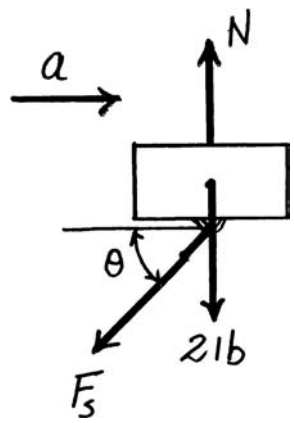

© 2010 Pearson Education, Inc., Upper Saddle River, NJ. All rights reserved. This material is protected under all copyright laws as they currently exist. No portion of this material may be reproduced, in any form or by any means, without permission in writing from the publisher.

13–34. In the cathode-ray tube, electrons having a mass m are emitted from a source point S and begin to travel horizontally with an initial velocity $\mathbf{v}_0$. While passing between the grid plates a distance l, they are subjected to a vertical force having a magnitude eV/w, where e is the charge of an electron, V the applied voltage acting across the plates, and w the distance between the plates. After passing clear of the plates, the electrons then travel in straight lines and strike the screen at A. Determine the deflection d of the electrons in terms of the dimensions of the voltage plate and tube. Neglect gravity which causes a slight vertical deflection when the electron travels from S to the screen, and the slight deflection between the plates.

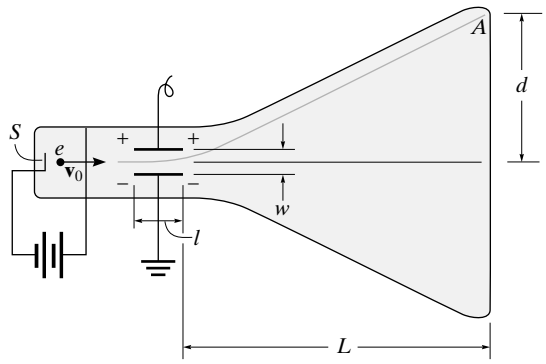

$$v_x = v_0$$

$$t_1 = \frac{l}{v_0}$$

t_1 is the time between plates.

$$t_1 = \frac{L}{v_0}$$

t_2 is the tune to reach screen.

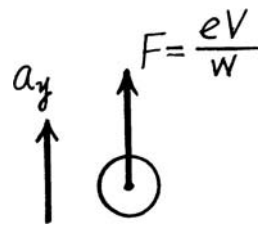

$$+\uparrow \Sigma F_y = ma_y; \qquad \frac{eV}{w} = ma_y$$

$$a_y = \frac{eV}{mw}$$

During t_1 constant acceleration,

$$(+\uparrow) \qquad v = v_0 + a_c t$$

$$v_y = a_y t_1 = \left(\frac{eV}{mw}\right)\left(\frac{l}{v_0}\right)$$

During time t_2, $a_y = 0$

$$d = v_y t_2 = \left(\frac{eVl}{mwv_0}\right)\left(\frac{L}{v_0}\right)$$

$$d = \frac{eVLl}{v_0^2 wm} \qquad \textbf{Ans.}$$

© 2010 Pearson Education, Inc., Upper Saddle River, NJ. All rights reserved. This material is protected under all copyright laws as they currently exist. No portion of this material may be reproduced, in any form or by any means, without permission in writing from the publisher.

13–35. The 2-kg collar C is free to slide along the smooth shaft AB. Determine the acceleration of collar C if (a) the shaft is fixed from moving, (b) collar A, which is fixed to shaft AB, moves to the left at constant velocity along the horizontal guide, and (c) collar A is subjected to an acceleration of $2\ \text{m/s}^2$ to the left. In all cases, the motion occurs in the vertical plane.

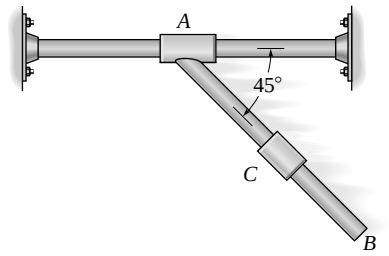

a, b) Equation of Motion: Applying Eq. 13–7 to FBD(a), we have

$$\searrow + \Sigma F_{x'} = ma_{x'}; \qquad 2(9.81)\sin 45° = 2a_C$$

$$a_C = 6.94\ \text{m/s}^2 \searrow \qquad \textbf{Ans.}$$

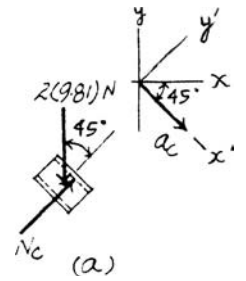

c) Equation of Motion: Applying Eq. 13–7 to FBD(b), we have

$$\searrow + \Sigma F_{x'} = ma_{x'}; \qquad 2(9.81)\sin 45° = 2a_{C/A} + 2(-2\cos 45°)$$

$$a_{C/A} = 8.351\ \text{m/s}^2$$

Relative Acceleration:

$$\overset{+}{\rightarrow} \qquad \mathbf{a}_C = \mathbf{a}_A + \mathbf{a}_{C/A}$$

$$= -2\mathbf{i} + 8.351\cos 45°\mathbf{i} - 8.351\sin 45°\mathbf{j}$$

$$= \{3.905\mathbf{i} - 5.905\mathbf{j}\}\ \text{m/s}^2$$

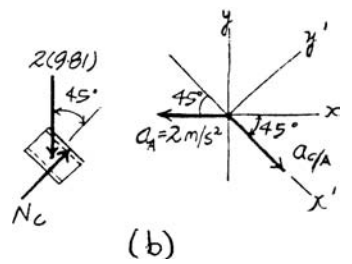

Thus, the magnitude of the acceleration $\mathbf{a}_c$ is

$$a_C = \sqrt{3.905^2 + (-5.905)^2} = 7.08\ \text{m/s}^2 \qquad \textbf{Ans.}$$

and its directional angle is

$$\theta = \tan^{-1}\left(\frac{5.905}{3.905}\right) = 56.5° \searrow \qquad \textbf{Ans.}$$

***13–36.** Blocks A and B each have a mass m. Determine the largest horizontal force $\mathbf{P}$ which can be applied to B so that A will not move relative to B. All surfaces are smooth.

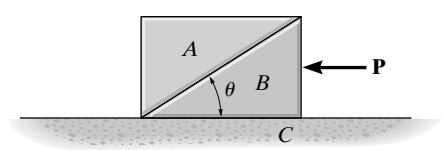

Require

$$a_A = a_B = a$$

Block A:

$$+\uparrow \Sigma F_y = 0; \qquad N\cos\theta - mg = 0$$

$$\overset{+}{\leftarrow} \Sigma F_x = ma_x; \qquad N\sin\theta = ma$$

$$a = g\tan\theta$$

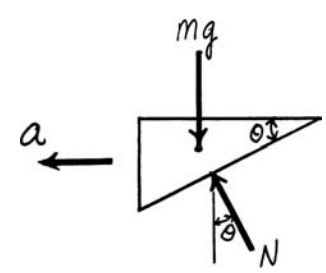

Block B:

$$\overset{+}{\leftarrow} \Sigma F_x = ma_x; \qquad P - N\sin\theta = ma$$

$$P - mg\tan\theta = mg\tan\theta$$

$$P = 2mg\tan\theta \qquad \textbf{Ans.}$$

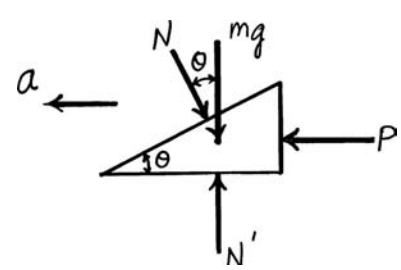

© 2010 Pearson Education, Inc., Upper Saddle River, NJ. All rights reserved. This material is protected under all copyright laws as they currently exist. No portion of this material may be reproduced, in any form or by any means, without permission in writing from the publisher.

•13–37. Blocks A and B each have a mass m. Determine the largest horizontal force **P** which can be applied to B so that A will not slip on B. The coefficient of static friction between A and B is μ_s. Neglect any friction between B and C.

Require

$a_A = a_B = a$

Block A:

$+\uparrow \Sigma F_y = 0; \qquad N\cos\theta - \mu_s N\sin\theta - mg = 0$

$\overset{+}{\leftarrow} \Sigma F_x = ma_x; \qquad N\sin\theta + \mu_s N\cos\theta = ma$

$$N = \frac{mg}{\cos\theta - \mu_s\sin\theta}$$

$$a = g\left(\frac{\sin\theta + \mu_s\cos\theta}{\cos\theta - \mu_s\sin\theta}\right)$$

Block B:

$\overset{+}{\leftarrow} \Sigma F_x = ma_x; \qquad P - \mu_s N\cos\theta - N\sin\theta = ma$

$$P - mg\left(\frac{\sin\theta + \mu_s\cos\theta}{\cos\theta - \mu_s\sin\theta}\right) = mg\left(\frac{\sin\theta + \mu_s\cos\theta}{\cos\theta - \mu_s\sin\theta}\right)$$

$$P = 2mg\left(\frac{\sin\theta + \mu_s\cos\theta}{\cos\theta - \mu_s\sin\theta}\right) \qquad \textbf{Ans.}$$

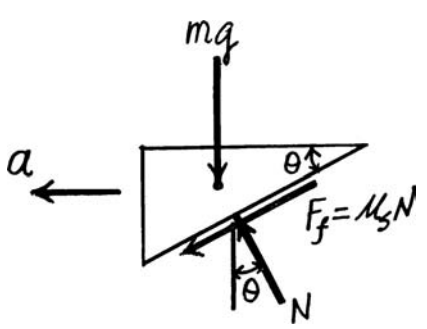

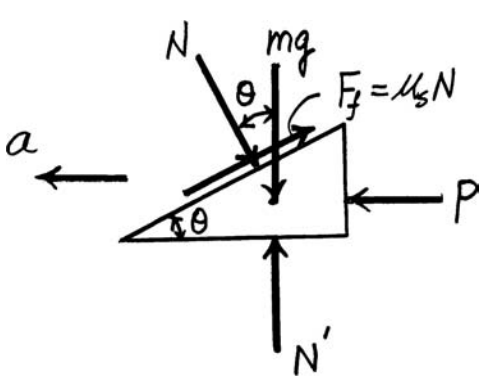

© 2010 Pearson Education, Inc., Upper Saddle River, NJ. All rights reserved. This material is protected under all copyright laws as they currently exist. No portion of this material may be reproduced, in any form or by any means, without permission in writing from the publisher.

13–38. If a force $F = 200$ N is applied to the 30-kg cart, show that the 20-kg block A will slide on the cart. Also determine the time for block A to move on the cart 1.5 m. The coefficients of static and kinetic friction between the block and the cart are $\mu_s = 0.3$ and $\mu_k = 0.25$. Both the cart and the block start from rest.

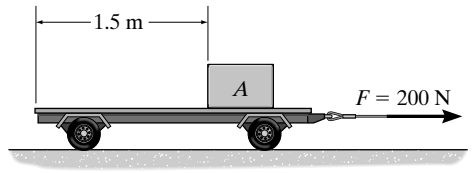

Free-Body Diagram: The free-body diagram of block A and the cart are shown in Figs. (a) and (b), respectively.

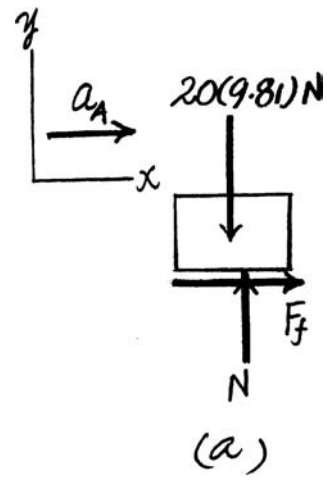

Equations of Motion: If block A does not slip, it will move together with the cart with a common acceleration, i.e., $a_A = a_C = a$. By referring to Figs. (a) and (b),

$+\uparrow \Sigma F_y = ma_y;\qquad N - 20(9.81) = 2(0)$

$$N = 196.2 \text{ N}$$

$\overset{+}{\rightarrow} \Sigma F_x = ma_x;\qquad F_f = 20a \qquad \textbf{(1)}$

and

$\overset{+}{\rightarrow} \Sigma F_x = ma_x;\qquad 200 - F_f = 30a \qquad \textbf{(2)}$

Solving Eqs. (1) and (2) yields

$a = 4 \text{ m/s}^2 \qquad F_f = 80 \text{ N}$

Since $F_f > (F_f)_{\max} = \mu_S N = 0.3(196.2) = 58.86$ N, the *block A will slide on the cart*. As such $F_f = \mu_k N = 0.25(196.2) = 49.05$ N. Again, by referring to Figs. (a) and (b),

$\overset{+}{\rightarrow} \Sigma F_x = ma_x;\qquad 49.05 = 20a_A \qquad a_A = 2.4525 \text{m/s}^2$

and

$\overset{+}{\rightarrow} \Sigma F_x = ma_x;\qquad 200 - 49.05 = 30a_C \qquad a_C = 5.0317 \text{ m/s}^2$

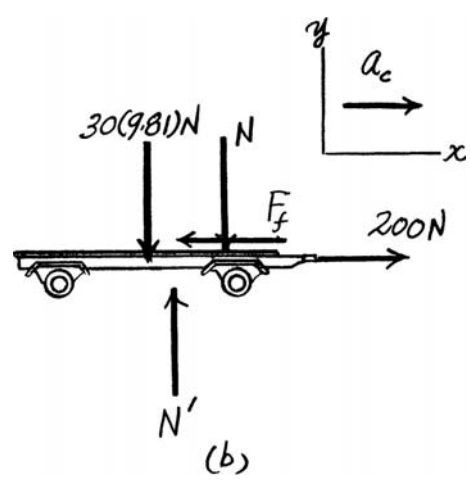

Kinematics: The acceleration of block A relative to the cart can be determined by applying the relative acceleration equation

$$\mathbf{a}_A = \mathbf{a}_C + \mathbf{a}_{A/C}$$

$\left(\overset{+}{\rightarrow}\right)\qquad 2.4525 = 5.0317 + a_{A/C}$

$$a_{A/C} = -2.5792 \text{ m/s}^2 = 2.5792 \text{ m/s}^2 \leftarrow$$

Here, $s_{A/C} = 1.5 \text{ m} \leftarrow$. Thus,

$$s_{A/C} = (s_{A/C})_O + (v_{A/C})_O t + \frac{1}{2} a_{A/C} t^2$$

$\left(\overset{+}{\rightarrow}\right)\qquad 1.5 = 0 + 0 + \frac{1}{2}(2.5792)t^2$

$t = 1.08$ s **Ans.**

© 2010 Pearson Education, Inc., Upper Saddle River, NJ. All rights reserved. This material is protected under all copyright laws as they currently exist. No portion of this material may be reproduced, in any form or by any means, without permission in writing from the publisher.

13–39. Suppose it is possible to dig a smooth tunnel through the earth from a city at A to a city at B as shown. By the theory of gravitation, any vehicle C of mass m placed within the tunnel would be subjected to a gravitational force which is always directed toward the center of the earth D. This force $\mathbf{F}$ has a magnitude that is directly proportional to its distance r from the earth's center. Hence, if the vehicle has a weight of $W = mg$ when it is located on the earth's surface, then at an arbitrary location r the magnitude of force $\mathbf{F}$ is $F = (mg/R)r$, where $R = 6328$ km, the radius of the earth. If the vehicle is released from rest when it is at B, $x = s = 2$ Mm, determine the time needed for it to reach A, and the maximum velocity it attains. Neglect the effect of the earth's rotation in the calculation and assume the earth has a constant density. *Hint:* Write the equation of motion in the x direction, noting that $r \cos \theta = x$. Integrate, using the kinematic relation $v\,dv = a\,dx$, then integrate the result using $v = dx/dt$.

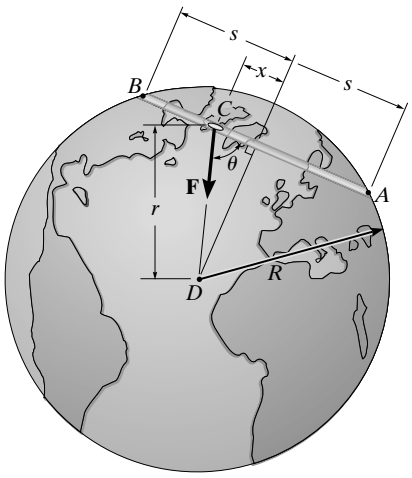

Equation of Motion: Applying Eq. 13–7, we have

$$\nwarrow + \Sigma F_{x'} = ma_{x'}; \qquad -\frac{mg}{R} r \cos\theta = ma \qquad a = -\frac{g}{R} r \cos\theta = -\frac{g}{R} x$$

Kinematics: Applying equation $v\,dv = a dx$, we have

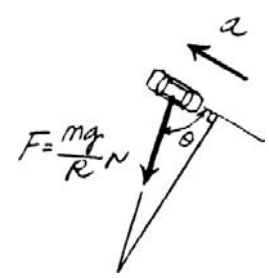

$$(\nwarrow +) \qquad \int_0^v v dv = -\frac{g}{R}\int_s^x x\,dx$$

$$\frac{v^2}{2} = \frac{g}{2R}\left(s^2 - x^2\right)$$

$$v = -\sqrt{\frac{g}{R}(s^2 - x^2)} \qquad \textbf{(1)}$$

Note: The negative sign indicates that the velocity is in the opposite direction to that of positive x.

Applying equation $dt = dx/v$, we have

$$(\nwarrow +) \qquad \int_0^t dt = -\sqrt{\frac{R}{g}}\int_s^x \frac{dx}{\sqrt{s^2 - x^2}}$$

$$t = \sqrt{\frac{R}{g}}\left(\frac{\pi}{2} - \sin^{-1}\frac{x}{s}\right)$$

At $x = -s$, $$t = \sqrt{\frac{R}{g}}\left(\frac{\pi}{2} - \sin^{-1}\frac{-s}{s}\right) = \pi\sqrt{\frac{R}{g}} \qquad \textbf{(2)}$$

Substituting $R = 6328\left(10^3\right)$ m and $g = 9.81$ m/s^2 into Eq.(2) yields

$$t = \pi\sqrt{\frac{6328(10^3)}{9.81}} = 2523.2 \text{ s} = 42.1 \text{ min} \qquad \textbf{Ans.}$$

The maximum velocity occurs at $x = 0$. From Eq.(1)

$$v_{\max} = -\sqrt{\frac{g}{R}(s^2 - 0^2)} = -\sqrt{\frac{g}{R}}s \qquad \textbf{(3)}$$

Substituting $R = 6328\left(10^3\right)$ m, $s = 2\left(10^6\right)$ m, and $g = 9.81$ m/s^2 into Eq.(3) yields

$$v_{\max} = -\left(\sqrt{\frac{9.81}{6328\,(10^3)}}\right)\left[2\left(10^6\right)\right] = -2490.18 \text{ m/s} = 2.49 \text{ km/s} \qquad \textbf{Ans.}$$

© 2010 Pearson Education, Inc., Upper Saddle River, NJ. All rights reserved. This material is protected under all copyright laws as they currently exist. No portion of this material may be reproduced, in any form or by any means, without permission in writing from the publisher.

***13–40.** The 30-lb crate is being hoisted upward with a constant acceleration of 6 ft/s^2. If the uniform beam AB has a weight of 200 lb, determine the components of reaction at the fixed support A. Neglect the size and mass of the pulley at B. *Hint:* First find the tension in the cable, then analyze the forces in the beam using statics.

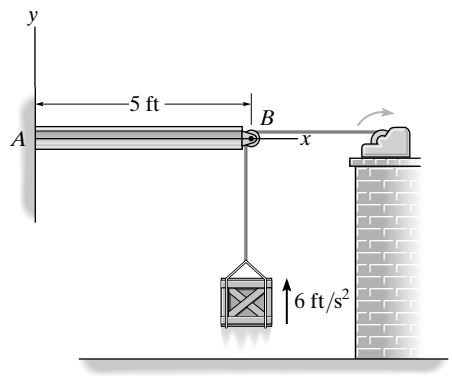

Crate:

$$+\uparrow \Sigma F_y = ma_y; \qquad T - 30 = \left(\frac{30}{32.2}\right)(6) \qquad T = 35.59 \text{ lb}$$

Beam:

$$\overset{+}{\rightarrow} \Sigma F_x = 0; \qquad -A_x + 35.59 = 0 \qquad A_x = 35.6 \text{ lb} \qquad \textbf{Ans.}$$

$$\circlearrowleft + \uparrow \Sigma F_y = 0; \qquad A_y - 200 - 35.59 = 0 \qquad A_y = 236 \text{ lb} \qquad \textbf{Ans.}$$

$$+\Sigma M_A = 0; \qquad M_A - 200(2.5) - (35.59)(5) = 0 \qquad M_A = 678 \text{ lb}\cdot\text{ft} \qquad \textbf{Ans.}$$

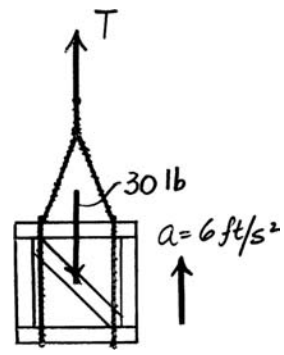

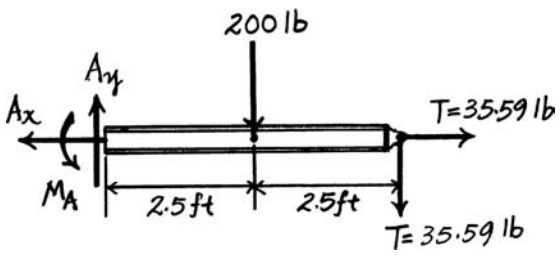

•13–41. If a horizontal force of $P = 10$ lb is applied to block A, determine the acceleration of block B. Neglect friction. *Hint:* Show that $a_B = a_A \tan 15°$.

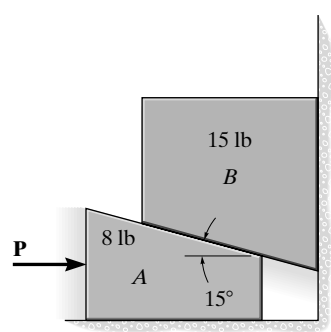

Equations of Motion: Applying Eq. 13–7 to FBD(a), we have

$$\overset{+}{\rightarrow} \Sigma F_x = ma_x; \qquad 10 - N_B \sin 15° = \left(\frac{8}{32.2}\right)a_A \qquad \textbf{(1)}$$

Applying Eq. 13–7 to FBD(b), we have

$$+\uparrow \Sigma F_y = ma_y; \qquad N_B \cos 15° - 15 = \left(\frac{15}{32.2}\right)a_B \qquad \textbf{(2)}$$

Kinematics: From the geometry of Fig. (c),

$$s_B = s_A \tan 15°$$

Taking the time derivative twice to the above expression yields

$$a_B = a_A \tan 15° \quad \text{(Q.E.D.)} \qquad \textbf{(3)}$$

Solving Eqs.(1), (2) and (3) yields

$$a_B = 5.68 \text{ ft/s}^2 \qquad \textbf{Ans.}$$

$$a_A = 21.22 \text{ ft/s}^2 \qquad N_B = 18.27 \text{ lb}$$

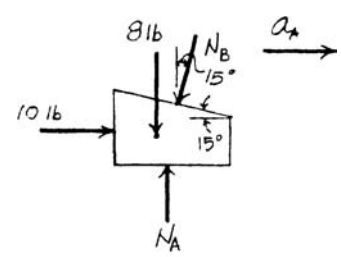

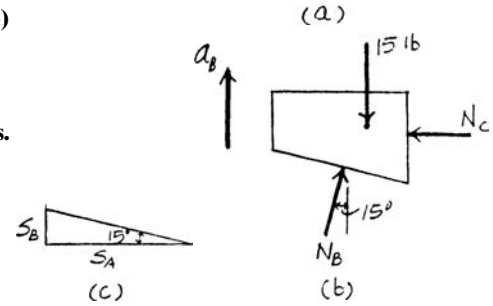

© 2010 Pearson Education, Inc., Upper Saddle River, NJ. All rights reserved. This material is protected under all copyright laws as they currently exist. No portion of this material may be reproduced, in any form or by any means, without permission in writing from the publisher.

13–42. Block A has a mass m_A and is attached to a spring having a stiffness k and unstretched length l_0. If another block B, having a mass m_B, is pressed against A so that the spring deforms a distance d, determine the distance both blocks slide on the smooth surface before they begin to separate. What is their velocity at this instant?

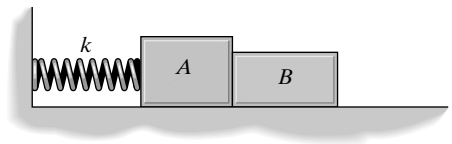

Block A:

$$\overset{+}{\rightarrow} \Sigma F_x = ma_x; \qquad -k(x-d) - N = m_A a_A$$

Block B:

$$\overset{+}{\rightarrow} \Sigma F_x = ma_x; \qquad N = m_B a_B$$

Since $a_A = a_B = a$,

$$-k(x-d) - m_B a = m_A a$$

$$a = \frac{k(d-x)}{(m_A + m_B)} \qquad N = \frac{km_B(d-x)}{(m_A + m_B)}$$

$N = 0$ when $d - x = 0$, or $x = d$ **Ans.**

$$v\,dv = a\,dx$$

$$\int_0^v v\,dv = \int_0^d \frac{k(d-x)}{(m_A + m_B)}\,dx$$

$$\frac{1}{2}v^2 = \frac{k}{(m_A + m_B)}\left[(d)x - \frac{1}{2}x^2\right]_0^d = \frac{1}{2}\frac{kd^2}{(m_A + m_B)}$$

$$v = \sqrt{\frac{kd^2}{(m_A + m_B)}}$$ **Ans.**

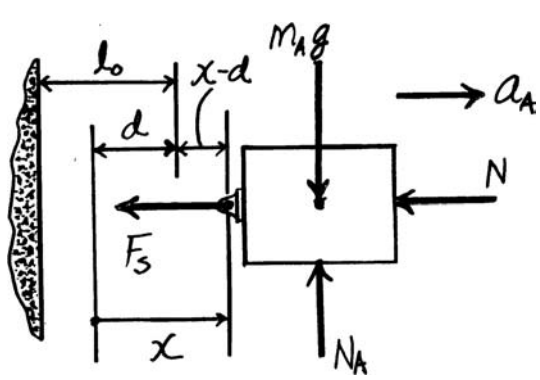

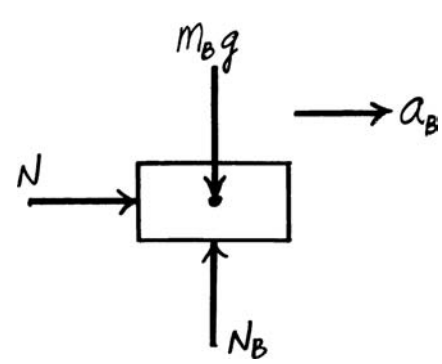

© 2010 Pearson Education, Inc., Upper Saddle River, NJ. All rights reserved. This material is protected under all copyright laws as they currently exist. No portion of this material may be reproduced, in any form or by any means, without permission in writing from the publisher.

13–43. Block A has a mass m_A and is attached to a spring having a stiffness k and unstretched length l_0. If another block B, having a mass m_B, is pressed against A so that the spring deforms a distance d, show that for separation to occur it is necessary that $d > 2\mu_k g(m_A + m_B)/k$, where μ_k is the coefficient of kinetic friction between the blocks and the ground. Also, what is the distance the blocks slide on the surface before they separate?

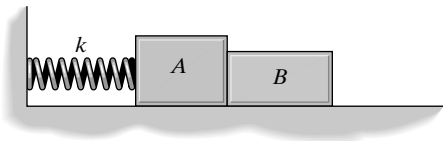

Block A:

$$\xrightarrow{+} \Sigma F_x = ma_x; \qquad -k(x - d) - N - \mu_k m_A g = m_A a_A$$

Block B:

$$\xrightarrow{+} \Sigma F_x = ma_x; \qquad N - \mu_k m_B g = m_B a_B$$

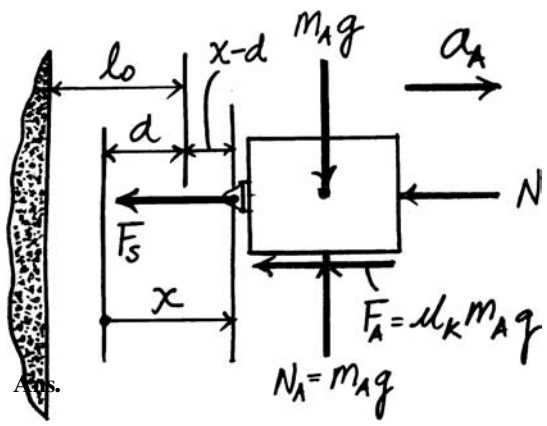

Since $a_A = a_B = a$,

$$a = \frac{k(d - x) - \mu_k g(m_A + m_B)}{(m_A + m_B)} = \frac{k(d - x)}{(m_A + m_B)} - \mu_k g$$

$$N = \frac{km_B(d - x)}{(m_A + m_B)}$$

$N = 0$, then $x = d$ for separation. Ans.

At the moment of separation:

$$v\,dv = a\,dx$$

$$\int_0^v v\,dv = \int_0^d \left[\frac{k(d - x)}{(m_A + m_B)} - \mu_k g\right] dx$$

$$\frac{1}{2}v^2 = \frac{k}{(m_A + m_B)}\left[(d)x - \frac{1}{2}x^2 - \mu_k g\,x\right]_0^d$$

$$v = \sqrt{\frac{kd^2 - 2\mu_k g(m_A + m_B)d}{(m_A + m_B)}}$$

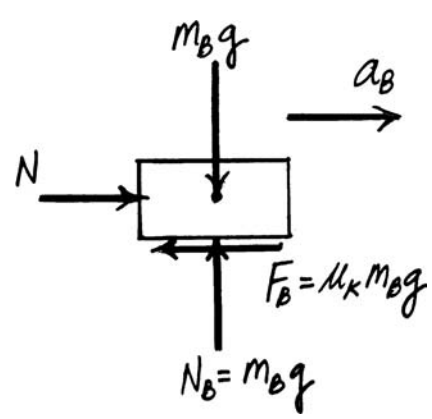

Require $v > 0$, so that

$$kd^2 - 2\mu_k g(m_A + m_B)d > 0$$

Thus,

$$kd > 2\mu_k g(m_A + m_B)$$

$$d > \frac{2\mu_k g}{k}(m_A + m_B)$$

Q.E.D.

© 2010 Pearson Education, Inc., Upper Saddle River, NJ. All rights reserved. This material is protected under all copyright laws as they currently exist. No portion of this material may be reproduced, in any form or by any means, without permission in writing from the publisher.

***13–44.** The 600-kg dragster is traveling with a velocity of 125 m/s when the engine is shut off and the braking parachute is deployed. If air resistance imposed on the dragster due to the parachute is $F_D = (6000 + 0.9v^2)$ N, where v is in m/s, determine the time required for the dragster to come to rest.

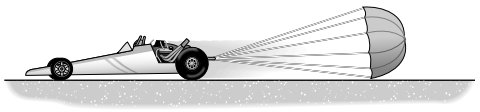

Free-Body Diagram: The free-body diagram of the dragster is shown in Fig. (a).

Equations of Motion: By referring to Fig. (a),

$$\overset{+}{\rightarrow} \Sigma F_x = ma_x; \qquad 6000 + 0.9v^2 = 600(-a)$$

$$a = -\left[10 + 1.5(10^{-3})v^2\right] \text{ m/s}^2$$

$$= -1.5(10^{-3})\left[6666.67 + v^2\right] \text{ m/s}^2$$

Kinematics: Using the result of **a**, the time the dragster takes to stop can be obtained by integrating.

$$\left(\overset{+}{\leftarrow}\right) \qquad \int dt = \int \frac{dv}{a}$$

$$\int_0^t dt = \int_{125\text{ m/s}}^{v} \frac{dv}{-1.5(10^{-3})(6666.67 + v^2)}$$

$$t = -666.67 \int_{125\text{ m/s}}^{v} \frac{dv}{6666.67 + v^2}$$

$$= -666.67\left[\frac{1}{\sqrt{6666.67(1)}} \tan^{-1}\left(\frac{v}{\sqrt{6666.7}}\right)\right]\Bigg|_{125\text{ m/s}}^{v}$$

$$= 8.165\left[0.9922 - \tan^{-1}(0.01225v)\right]$$

When $v = 0$,

$$t = 8.165\left[0.9922 - \tan^{-1}(0)\right] = 8.10 \text{ s} \qquad \textbf{Ans.}$$

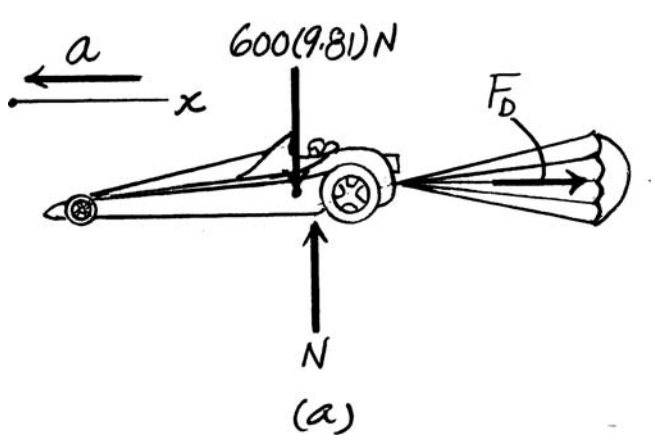

(a)

© 2010 Pearson Education, Inc., Upper Saddle River, NJ. All rights reserved. This material is protected under all copyright laws as they currently exist. No portion of this material may be reproduced, in any form or by any means, without permission in writing from the publisher.

•13–45. The buoyancy force on the 500-kg balloon is $F = 6\,\text{kN}$, and the air resistance is $F_D = (100v)\,\text{N}$, where v is in m/s. Determine the terminal or maximum velocity of the balloon if it starts from rest.

Free-Body Diagram: The free-body diagram of the balloon is shown in Fig. (a).

Equations of Motion: By referring to Fig. (a),

$$+\uparrow \Sigma F_y = ma_y; \qquad 6000 - 500(9.81)100v = 500a$$

$$a = (2.19 - 0.2v)\ \text{m/s}^2$$

Kinematics: Using the result of **a**, the velocity of the balloon as a function of t can be determined by integrating the kinematic equation, $dt = \dfrac{dv}{a}$. Here, the initial condition $v = 0$ at $t = 0$ will be used as the integration limit. Thus,

$$(+\uparrow) \qquad \int dt = \int \frac{dv}{a}$$

$$\int_0^t dt = \int_0^v \frac{dv}{2.19 - 0.2v}$$

$$t = -\frac{1}{0.2}\ln(2.19 - 0.2v)\Big|_0^v$$

$$t = 5\ln\left(\frac{2.19}{2.19 - 0.2v}\right)$$

$$e^{t/5} = \frac{2.19}{2.19 - 0.2v}$$

$$v = 10.95(1 - e^{-t/5})$$

When $t \to \infty$, the balloon achieves its terminal velocity. Since $e^{-t/5} \to 0$ when $t \to \infty$,

$$v_{\max} = 10.95\ \text{m/s} \qquad \textbf{Ans.}$$

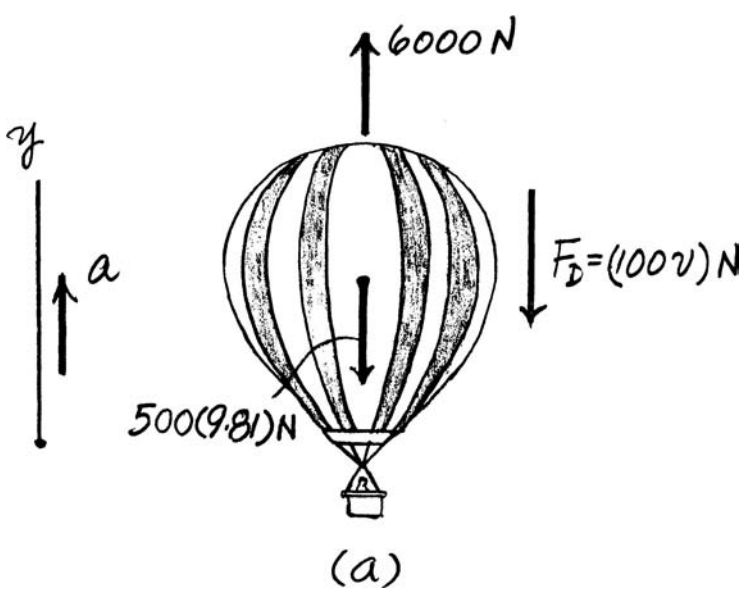

© 2010 Pearson Education, Inc., Upper Saddle River, NJ. All rights reserved. This material is protected under all copyright laws as they currently exist. No portion of this material may be reproduced, in any form or by any means, without permission in writing from the publisher.

13–46. The parachutist of mass m is falling with a velocity of v_0 at the instant he opens the parachute. If air resistance is $F_D = Cv^2$, determine her maximum velocity (terminal velocity) during the descent.

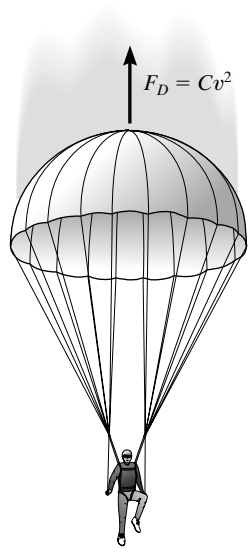

Free-Body Diagram: The free-body diagram of the parachutist is shown in Fig. (a).

Equations of Motion: By referring to Fig. (a),

$$+\downarrow \Sigma F_y = ma_y; \qquad mg - cv^2 = ma$$

$$a = \frac{mg - cv^2}{m} = g - \frac{c}{m}v^2 \downarrow$$

Kinematics: Using the result of **a**, the velocity of the parachutist as a function of t can be determined by integrating the kinematic equation, $dt = \frac{dv}{a}$. Here, the initial condition $v = v_0$ at $t = 0$ will be used as the integration limit. Thus,

$$(+\downarrow) \qquad \int dt = \int \frac{dv}{a}$$

$$\int_0^t dt = \int_{v_0}^{v} \frac{dv}{g - \frac{c}{m}v^2}$$

$$t = \frac{1}{2\sqrt{\frac{gc}{m}}} \ln\left(\frac{\sqrt{g} + \sqrt{\frac{c}{m}}v}{\sqrt{g} - \sqrt{\frac{c}{m}}v}\right)\Bigg|_{v_0}^{v}$$

$$t = \frac{1}{2}\sqrt{\frac{m}{gc}} \ln\left[\frac{\sqrt{\frac{mg}{c}} + v}{\sqrt{\frac{mg}{c}} - v}\right]\Bigg|_{v_0}^{v}$$

$$2\sqrt{\frac{m}{gc}}t = \ln\left[\frac{\left(\sqrt{\frac{mg}{c}} + v\right)\left(\sqrt{\frac{mg}{c}} - v\right)}{\left(\sqrt{\frac{mg}{c}} - v\right)\left(\sqrt{\frac{mg}{c}} + v_0\right)}\right]$$

$$e^2\sqrt{\frac{gc}{m}}t = \left[\frac{\left(\sqrt{\frac{mg}{c}} + v\right)\left(\sqrt{\frac{mg}{c}} - v_0\right)}{\left(\sqrt{\frac{mg}{c}} - v\right)\left(\sqrt{\frac{mg}{c}} + v_0\right)}\right]$$

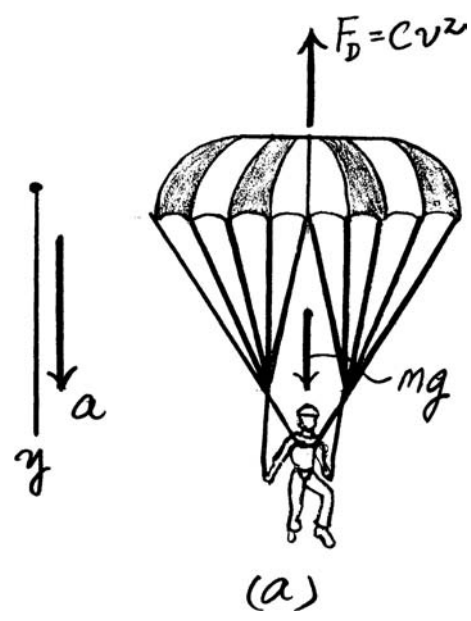

© 2010 Pearson Education, Inc., Upper Saddle River, NJ. All rights reserved. This material is protected under all copyright laws as they currently exist. No portion of this material may be reproduced, in any form or by any means, without permission in writing from the publisher.

13–46. Continued

$$v = \frac{\sqrt{\frac{mg}{c}}\left[\left(\frac{\sqrt{\frac{m}{gc}} + v_0}{\sqrt{\frac{m}{gc}} - v_0}\right)e^{2\sqrt{\frac{gc}{m}}t} - 1\right]}{1 + \left(\frac{\sqrt{\frac{m}{gc}} + v_0}{\sqrt{\frac{m}{gc}} - v_0}\right)e^{2\sqrt{\frac{gc}{m}}t}}$$

When $t \to \infty$, $\left(\frac{\sqrt{\frac{m}{gc}} + v_0}{\sqrt{\frac{m}{gc}} - v_0}\right)e^{2\sqrt{\frac{gc}{m}}t} - 1 \cong 1 + \left(\frac{\sqrt{\frac{m}{gc}} + v_0}{\sqrt{\frac{m}{gc}} - v_0}\right)e^{2\sqrt{\frac{gc}{m}}t}$. Thus, the terminal velocity of the parachutist is

$$v_{\max} = \sqrt{\frac{mg}{c}} \qquad \textbf{Ans.}$$

Note: The terminal velocity of the parachutist is independent of the initial velocity v_0.

© 2010 Pearson Education, Inc., Upper Saddle River, NJ. All rights reserved. This material is protected under all copyright laws as they currently exist. No portion of this material may be reproduced, in any form or by any means, without permission in writing from the publisher.

13–47. The weight of a particle varies with altitude such that $W = m(gr_0^2)/r^2$, where r_0 is the radius of the earth and r is the distance from the particle to the earth's center. If the particle is fired vertically with a velocity v_0 from the earth's surface, determine its velocity as a function of position r. What is the smallest velocity v_0 required to escape the earth's gravitational field, what is r_{max}, and what is the time required to reach this altitude?

$$+\uparrow \Sigma F_y = ma_y; \qquad -m\left(\frac{gr_0^2}{r^2}\right) = ma$$

$$a = \frac{gr_0^2}{r^2}$$

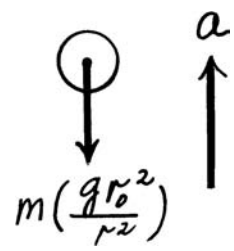

$$v\,dv = a\,dr$$

$$\int_{v_0}^{v} v\,dv = \int_{r_0}^{r} -gr_0^2\frac{dr}{r^2}$$

$$\frac{1}{2}(v^2 - v_0^2) = -gr_0^2\left[-\frac{1}{r}\right]_0^r = gr_0^2\left(\frac{1}{r} - \frac{1}{r_0}\right)$$

$$v = \sqrt{v_0^2 - 2gr_0\left(1 - \frac{r_0}{r}\right)} \qquad \textbf{Ans. (1)}$$

For minimum escape, require $v = 0$,

$$v_0^2 - 2gr_0\left(1 - \frac{r_0}{r}\right) = 0$$

$$r_{max} = \frac{2gr_0^2}{2gr_0 - v_0^2} \qquad \textbf{Ans.}$$

$$r_{max} \rightarrow \infty \text{ when } v_0^2 \rightarrow 2gr_0$$

Escape velocity is

$$v_{esc} = \sqrt{2gr_0} \qquad \textbf{Ans. (2)}$$

From Eq. (1), using the value for v from Eq. (2),

$$v = \frac{dr}{dt} = \sqrt{\frac{2gr_0^2}{r}}$$

$$\int_{r_0}^{r} \frac{dr}{\sqrt{\frac{2gr_0^2}{r}}} = \int_0^t dt$$

$$\frac{1}{\sqrt{2gr_0^2}}\left[\frac{2}{3}r^{\frac{3}{2}}\right]_{r_0}^{r_{max}} = t$$

$$t = \frac{2}{3r_0\sqrt{2g}}\left(r_{max}^{\frac{3}{2}} - r_0^{\frac{3}{2}}\right) \qquad \textbf{Ans.}$$

© 2010 Pearson Education, Inc., Upper Saddle River, NJ. All rights reserved. This material is protected under all copyright laws as they currently exist. No portion of this material may be reproduced, in any form or by any means, without permission in writing from the publisher.

***13–48.** The 2-kg block B and 15-kg cylinder A are connected to a light cord that passes through a hole in the center of the smooth table. If the block is given a speed of $v = 10\,\text{m/s}$, determine the radius r of the circular path along which it travels.

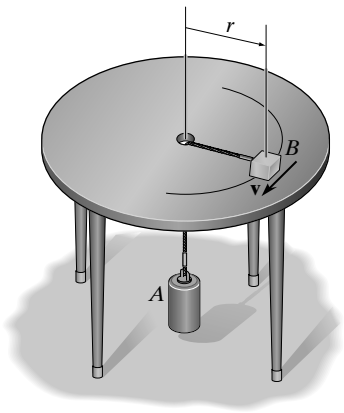

Free-Body Diagram: The free-body diagram of block B is shown in Fig. (a). The tension in the cord is equal to the weight of cylinder A, i.e., $T = 15(9.81)\text{N} = 147.15\,\text{N}$. Here, $\mathbf{a}_n$ must be directed towards the center of the circular path (positive n axis).

Equations of Motion: Realizing that $a_n = \dfrac{v^2}{\rho} = \dfrac{10^2}{r}$ and referring to Fig. (a),

$$\Sigma F_n = ma_n; \qquad 147.15 = 2\left(\frac{10^2}{r}\right)$$

$$r = 1.36\,\text{m} \qquad \textbf{Ans.}$$

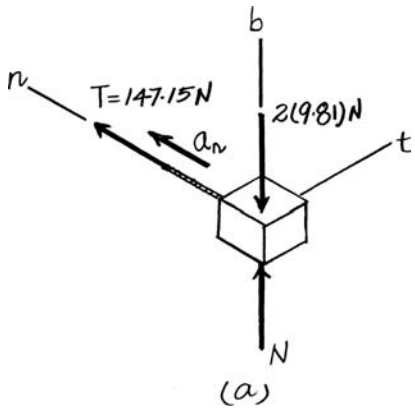

•13–49. The 2-kg block B and 15-kg cylinder A are connected to a light cord that passes through a hole in the center of the smooth table. If the block travels along a circular path of radius $r = 1.5\,\text{m}$, determine the speed of the block.

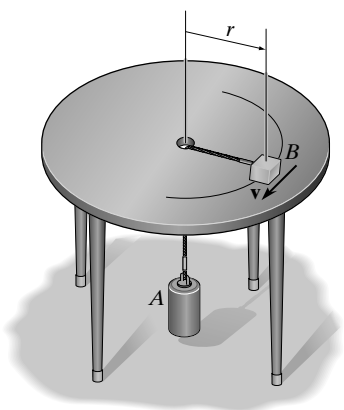

Free-Body Diagram: The free-body diagram of block B is shown in Fig. (a). The tension in the cord is equal to the weight of cylinder A, i.e., $T = 15(9.81)\text{N} = 147.15\text{N}$. Here, $\mathbf{a}_n$ must be directed towards the center of the circular path (positive n axis).

Equations of Motion: Realizing that $a_n = \dfrac{v^2}{r} = \dfrac{v^2}{1.5}$ and referring to Fig. (a),

$$\Sigma F_n = ma_n; \qquad 147.15 = 2\left(\frac{v^2}{1.5}\right)$$

$$v = 10.5\,\text{m/s} \qquad \textbf{Ans.}$$

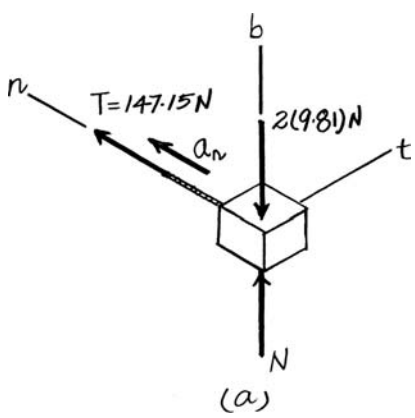

© 2010 Pearson Education, Inc., Upper Saddle River, NJ. All rights reserved. This material is protected under all copyright laws as they currently exist. No portion of this material may be reproduced, in any form or by any means, without permission in writing from the publisher.

13–50. At the instant shown, the 50-kg projectile travels in the vertical plane with a speed of $v = 40\,\text{m/s}$. Determine the tangential component of its acceleration and the radius of curvature ρ of its trajectory at this instant.

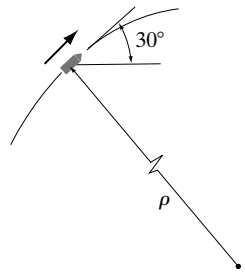

Free-Body Diagram: The free-body diagram of the projectile is shown in Fig. (a). Here, $\mathbf{a}_n$ must be directed towards the center of curvature of the trajectory (positive n axis).

Equations of Motion: Here, $a_n = \dfrac{v^2}{\rho} = \dfrac{40^2}{\rho}$. By referring to Fig. (a),

$+\nearrow \Sigma F_t = ma_t;$ $\quad -50(9.81)\sin 30° = 50a_t$

$a_t = -4.905\ \text{m/s}^2$ **Ans.**

$+\searrow \Sigma F_n = ma_n;$ $\quad 50(9.81)\cos 30° = 50\left(\dfrac{40^2}{\rho}\right)$

$\rho = 188\ \text{m}$ **Ans.**

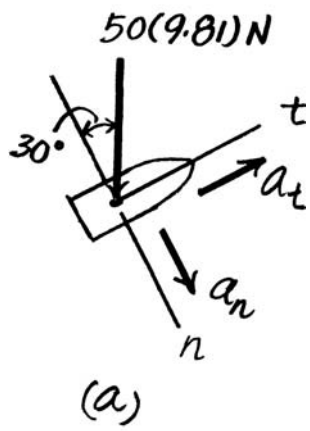

13–51. At the instant shown, the radius of curvature of the vertical trajectory of the 50-kg projectile is $\rho = 200\,\text{m}$. Determine the speed of the projectile at this instant.

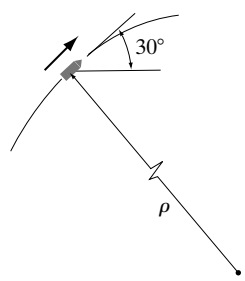

Free-Body Diagram: The free-body diagram of the projectile is shown in Fig. (a). Here, $\mathbf{a}_n$ must be directed towards the center of curvature of the trajectory (positive n axis).

Equations of Motion: Here, $a_n = \dfrac{v^2}{\rho} = \dfrac{v^2}{200}$. By referring to Fig. (a),

$\searrow + \Sigma F_n = ma_n;$ $\quad 50(9.81)\cos 30° = 50\left(\dfrac{v^2}{200}\right)$

$v = 41.2\ \text{m/s}$ **Ans.**

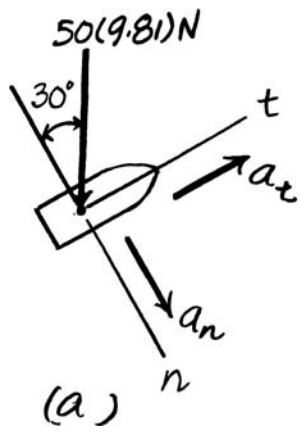

© 2010 Pearson Education, Inc., Upper Saddle River, NJ. All rights reserved. This material is protected under all copyright laws as they currently exist. No portion of this material may be reproduced, in any form or by any means, without permission in writing from the publisher.

***13–52.** Determine the mass of the sun, knowing that the distance from the earth to the sun is $149.6(10^6)$ km. *Hint:* Use Eq. 13–1 to represent the force of gravity acting on the earth.

$$\searrow + \Sigma F_n = ma_n; \qquad G\frac{M_e M_s}{R^2} = M_e\frac{v^2}{R} \qquad M_s = \frac{v^2 R}{G}$$

$$v = \frac{s}{t} = \frac{2\pi(149.6)(10^9)}{365(24)(3600)} = 29.81\left(10^3\right)\text{ m/s}$$

$$M_s = \frac{\left[(29.81)(10^3)\right]^2(149.6)(10^9)}{66.73(10^{-12})} = 1.99\left(10^{30}\right)\text{ kg} \qquad \textbf{Ans.}$$

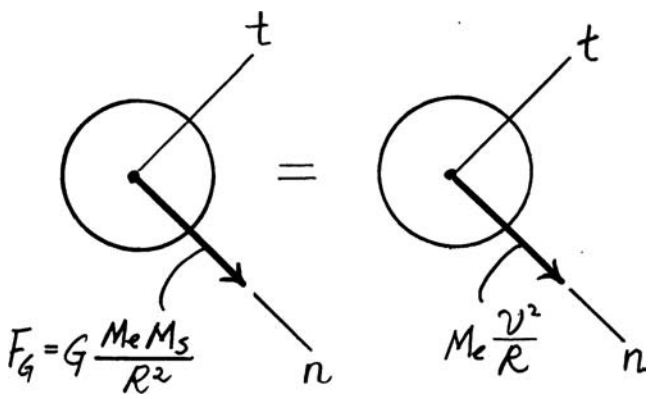

•13–53. The sports car, having a mass of 1700 kg, travels horizontally along a 20° banked track which is circular and has a radius of curvature of $\rho = 100$ m. If the coefficient of static friction between the tires and the road is $\mu_s = 0.2$, determine the *maximum constant speed* at which the car can travel without sliding up the slope. Neglect the size of the car.

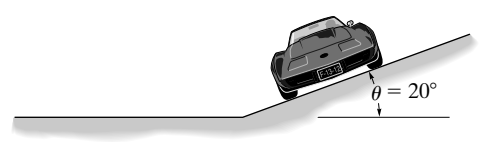

$$+\uparrow \Sigma F_b = 0; \qquad N\cos 20° - 0.2N\sin 20° - 1700(9.81) = 0$$

$$N = 19\,140.6\text{ N}$$

$$\overset{+}{\leftarrow} \Sigma F_n = ma_n; \qquad 19\,140.6\sin 20° + 0.2(19\,140.6)\cos 20° = 1700\left(\frac{v_{\max}^2}{100}\right)$$

$$v_{\max} = 24.4\text{ m/s} \qquad \textbf{Ans.}$$

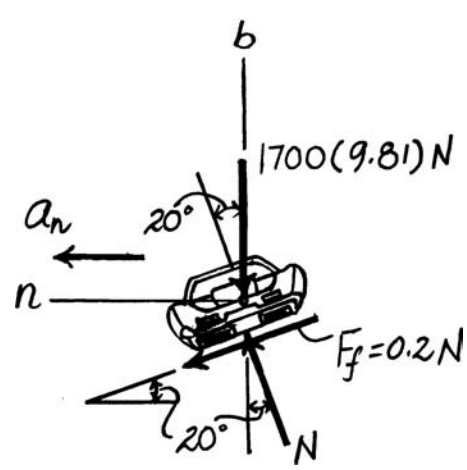

© 2010 Pearson Education, Inc., Upper Saddle River, NJ. All rights reserved. This material is protected under all copyright laws as they currently exist. No portion of this material may be reproduced, in any form or by any means, without permission in writing from the publisher.

13–54. Using the data in Prob. 13–53, determine the *minimum speed* at which the car can travel around the track without sliding down the slope.

$$+\uparrow \Sigma F_b = 0; \qquad N\cos 20° + 0.2N\sin 20° - 1700(9.81) = 0$$

$$N = 16543.1 \text{ N}$$

$$\overset{+}{\leftarrow} \Sigma F_n = ma_n; \qquad 16543.1\sin 20° - 0.2(16543.1)\cos 20° = 1700\left(\frac{v_{\min}^2}{100}\right)$$

$$v_{\min} = 12.2 \text{ m/s}$$ **Ans.**

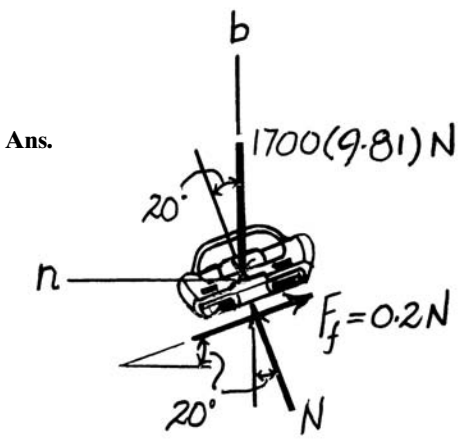

13–55. The device shown is used to produce the experience of weightlessness in a passenger when he reaches point A, $\theta = 90°$, along the path. If the passenger has a mass of 75 kg, determine the minimum speed he should have when he reaches A so that he does not exert a normal reaction on the seat. The chair is pin-connected to the frame BC so that he is always seated in an upright position. During the motion his speed remains constant.

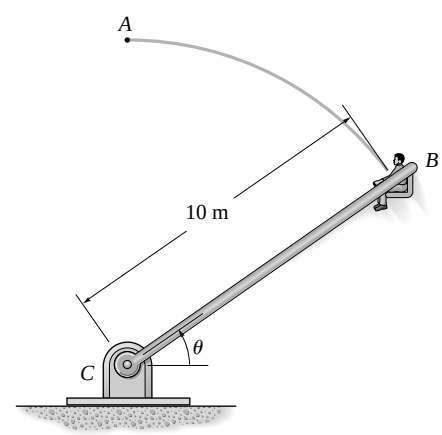

Equation of Motion: If the man is about to fly off from the seat, the normal reaction $N = 0$. Applying Eq. 13–8, we have

$$+\downarrow \Sigma F_n = ma_n; \qquad 75(9.81) = 75\left(\frac{v^2}{10}\right)$$

$$v = 9.90 \text{ m/s}$$ **Ans.**

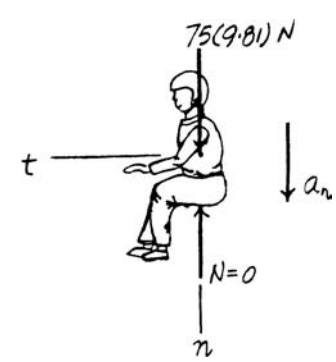

© 2010 Pearson Education, Inc., Upper Saddle River, NJ. All rights reserved. This material is protected under all copyright laws as they currently exist. No portion of this material may be reproduced, in any form or by any means, without permission in writing from the publisher.

***13–56.** A man having the mass of 75 kg sits in the chair which is pin-connected to the frame BC. If the man is always seated in an upright position, determine the horizontal and vertical reactions of the chair on the man at the instant $\theta = 45°$. At this instant he has a speed of 6 m/s, which is increasing at 0.5 m/s^2.

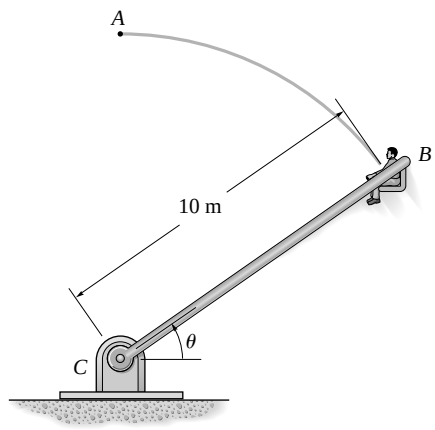

Equation of Motion: Applying Eq. 13–8, we have

$$+\nwarrow \Sigma F_t = ma_t; \qquad R_x \cos 45° + R_y \cos 45° - 75(9.81)\cos 45° = 75(0.5) \qquad \textbf{(1)}$$

$$+\swarrow \Sigma F_n = ma_n; \qquad R_x \sin 45° - R_y \sin 45° + 75(9.81)\sin 45° = 75\left(\frac{6^2}{10}\right) \qquad \textbf{(2)}$$

Solving Eqs.(1) and (2) yields

$$R_x = 217 \text{ N} \qquad R_y = 571 \text{ N} \qquad \textbf{Ans.}$$

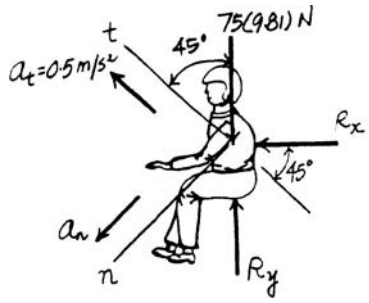

•13–57. Determine the tension in wire CD just after wire AB is cut. The small bob has a mass m.

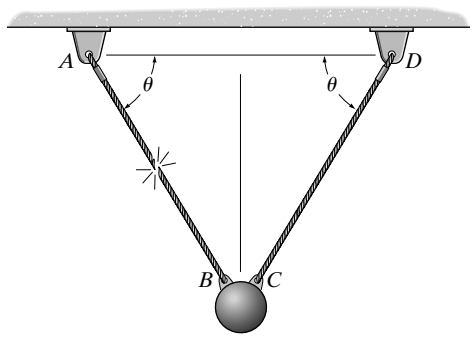

Free-Body Diagram: The free-body diagram of the bob is shown in Fig. (a).

Equations of Motion: Since the speed of the bob is zero just after the wire AB is cut, its normal component of acceleration is $a_n = \frac{v^2}{\rho} = 0$. By referring to Fig. (a),

$$+\nearrow \Sigma F_n = ma_n; \qquad T_{CD} - mg\sin\theta = m(0)$$

$$T_{CD} = mg\sin\theta \qquad \textbf{Ans.}$$

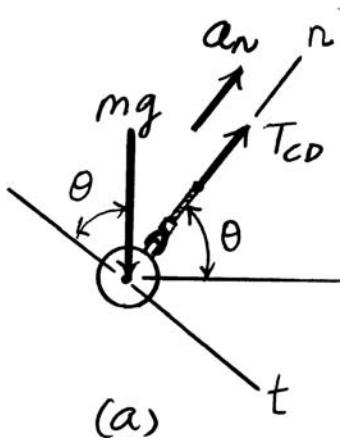

© 2010 Pearson Education, Inc., Upper Saddle River, NJ. All rights reserved. This material is protected under all copyright laws as they currently exist. No portion of this material may be reproduced, in any form or by any means, without permission in writing from the publisher.

13–58. Determine the time for the satellite to complete its orbit around the earth. The orbit has a radius r measured from the center of the earth. The masses of the satellite and the earth are m_s and M_e, respectively.

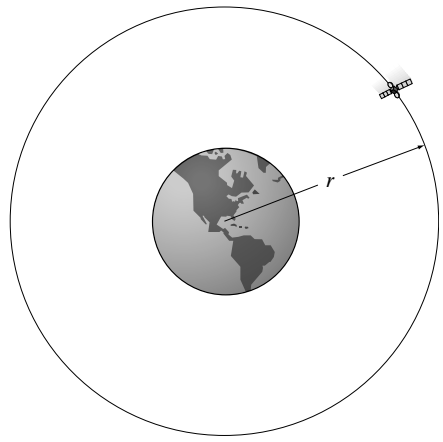

Free-Body Diagram: The free-body diagram of the satellite is shown in Fig. (a). The force **F** which is directed towards the center of the orbit (positive n axis) is given by $F = \frac{GM_e m_s}{r^2}$ (Eq. 12–1). Also, $\mathbf{a}_n$ must be directed towards the positive n axis.

Equations of Motion: Realizing that $a_n = \frac{v^2}{\rho} = \frac{{v_s}^2}{r}$ and referring to Fig. (a),

$$+\swarrow \Sigma F_n = ma_n; \qquad \frac{GM_e m_s}{r^2} = m_s\left(\frac{{v_s}^2}{r}\right)$$

$$v_s = \sqrt{\frac{GM_e}{r}}$$

The period is the time required for the satellite to complete one revolution around the orbit. Thus,

$$T = \frac{2\pi r}{v_s} = \frac{2\pi r}{\sqrt{\frac{GM_e}{r}}} = 2\pi\sqrt{\frac{r^3}{GM_e}} \qquad \textbf{Ans.}$$

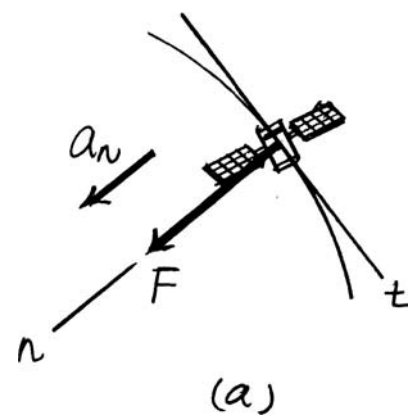

13–59. An acrobat has a weight of 150 lb and is sitting on a chair which is perched on top of a pole as shown. If by a mechanical drive the pole rotates downward at a constant rate from $\theta = 0°$, such that the acrobat's center of mass G maintains a *constant speed* of $v_a = 10$ ft/s, determine the angle θ at which he begins to "fly" out of the chair. Neglect friction and assume that the distance from the pivot O to G is $\rho = 15$ ft.

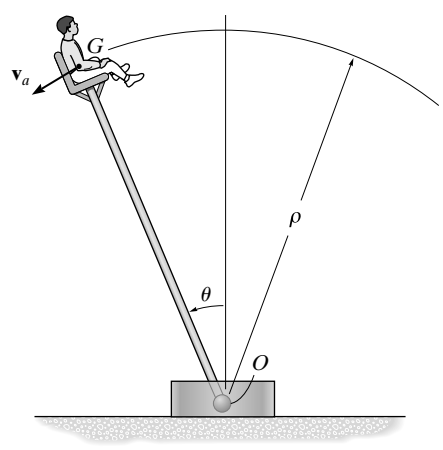

Equations of Motion: If the acrobat is about to fly off the chair, the normal reaction $N = 0$. Applying Eq. 13–8, we have

$$+\searrow \Sigma F_n = ma_n; \qquad 150\cos\theta = \frac{150}{32.2}\left(\frac{10^2}{15}\right)$$

$$\theta = 78.1° \qquad \textbf{Ans.}$$

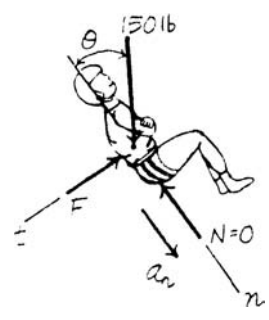

© 2010 Pearson Education, Inc., Upper Saddle River, NJ. All rights reserved. This material is protected under all copyright laws as they currently exist. No portion of this material may be reproduced, in any form or by any means, without permission in writing from the publisher.

***13–60.** A spring, having an unstretched length of 2 ft, has one end attached to the 10-lb ball. Determine the angle θ of the spring if the ball has a speed of 6 ft/s tangent to the horizontal circular path.

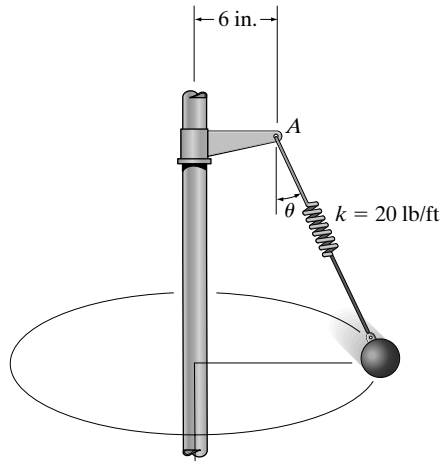

Free-Body Diagram: The free-body diagram of the bob is shown in Fig. (a). If we denote the stretched length of the spring as l, then using the springforce formula, $F_{sp} = ks = 20(l - 2)$ lb. Here, $\mathbf{a}_n$ must be directed towards the center of the horizontal circular path (positive n axis).

Equations of Motion: The radius of the horizontal circular path is $r = 0.5 + l \sin\theta$. Since $a_n = \dfrac{v^2}{r} = \dfrac{6^2}{0.5 + l\sin\theta}$, by referring to Fig. (a),

$+\uparrow \Sigma F_b = 0;\qquad 20(l - 2)\cos\theta - 10 = 0$ **(1)**

$\overset{+}{\leftarrow} \Sigma F_n = ma_n;\qquad 20(l - 2)\sin\theta = \dfrac{10}{32.2}\left(\dfrac{6^2}{0.5 + l\sin\theta}\right)$ **(2)**

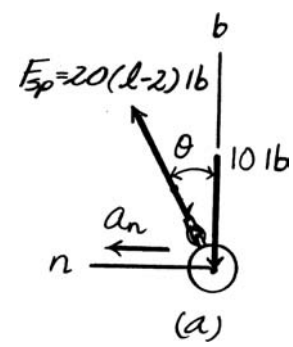

Solving Eqs. (1) and (2) yields

$\theta = 31.26° = 31.3°$ **Ans.**

$l = 2.585$ ft **Ans.**

•13–61. If the ball has a mass of 30 kg and a speed $v = 4$ m/s at the instant it is at its lowest point, $\theta = 0°$, determine the tension in the cord at this instant. Also, determine the angle θ to which the ball swings and momentarily stops. Neglect the size of the ball.

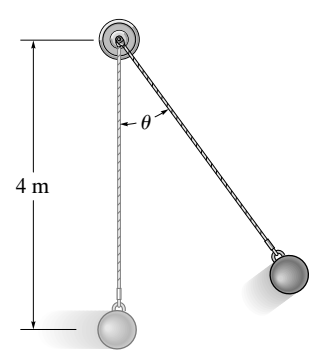

$+\uparrow \Sigma F_n = ma_n;\qquad T - 30(9.81) = 30\left(\dfrac{(4)^2}{4}\right)$

$T = 414$ N **Ans.**

$+\nearrow \Sigma F_t = ma_t;\qquad -30(9.81)\sin\theta = 30a_t$

$a_t = -9.81\sin\theta$

$a_t\, ds = v\, dv$ Since $ds = 4\, d\theta$, then

$-9.81\displaystyle\int_0^\theta \sin\theta(4\, d\theta) = \int_4^0 v\, dv$

$\left[9.81(4)\cos\theta\right]_0^\theta = -\dfrac{1}{2}(4)^2$

$39.24(\cos\theta - 1) = -8$

$\theta = 37.2°$ **Ans.**

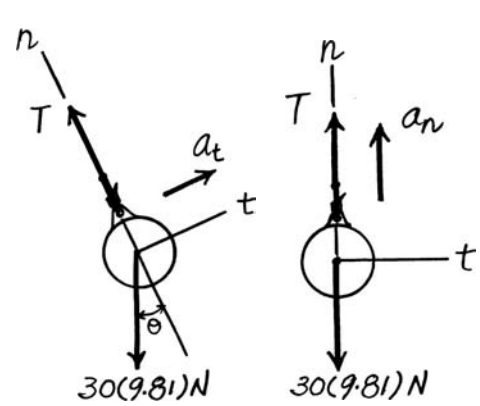

© 2010 Pearson Education, Inc., Upper Saddle River, NJ. All rights reserved. This material is protected under all copyright laws as they currently exist. No portion of this material may be reproduced, in any form or by any means, without permission in writing from the publisher.

13–62. The ball has a mass of 30 kg and a speed $v = 4$ m/s at the instant it is at its lowest point, $\theta = 0°$. Determine the tension in the cord and the rate at which the ball's speed is decreasing at the instant $\theta = 20°$. Neglect the size of the ball.

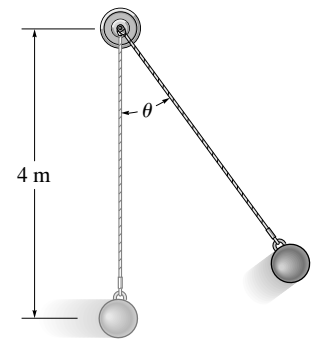

$+\nwarrow \Sigma F_n = ma_n; \qquad T - 30(9.81)\cos\theta = 30\left(\frac{v^2}{4}\right)$

$+\nearrow \Sigma F_t = ma_t; \qquad -30(9.81)\sin\theta = 30a_t$

$a_t = -9.81\sin\theta$

$a_t\,ds = v\,dv$ Since $ds = 4\,d\theta$, then

$$-9.81\int_0^\theta \sin\theta\,(4\,d\theta) = \int_4^v v\,dv$$

$$9.81(4)\cos\theta\Big|_0^\theta = \frac{1}{2}(v)^2 - \frac{1}{2}(4)^2$$

$$39.24(\cos\theta - 1) + 8 = \frac{1}{2}v^2$$

At $\theta = 20°$

$v = 3.357$ m/s

$a_t = -3.36\ \text{m/s}^2 = 3.36\ \text{m/s}^2\ \swarrow$ **Ans.**

$T = 361$ N **Ans.**

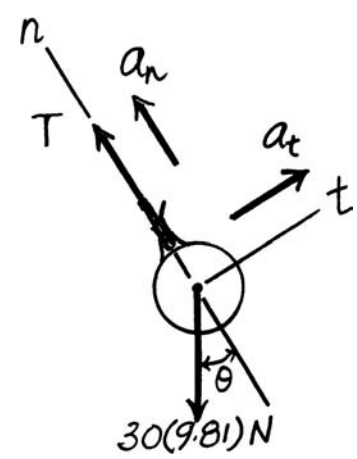

© 2010 Pearson Education, Inc., Upper Saddle River, NJ. All rights reserved. This material is protected under all copyright laws as they currently exist. No portion of this material may be reproduced, in any form or by any means, without permission in writing from the publisher.

13–63. The vehicle is designed to combine the feel of a motorcycle with the comfort and safety of an automobile. If the vehicle is traveling at a constant speed of 80 km/h along a circular curved road of radius 100 m, determine the tilt angle θ of the vehicle so that only a normal force from the seat acts on the driver. Neglect the size of the driver.

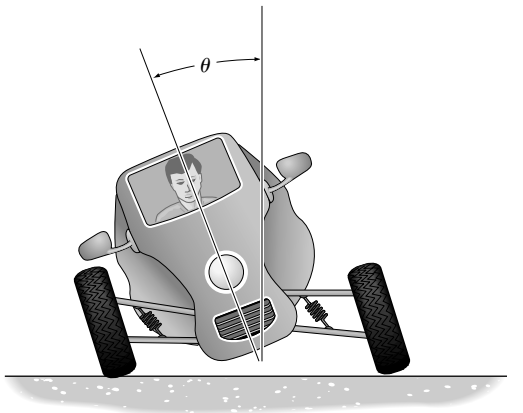

Free-Body Diagram: The free-body diagram of the passenger is shown in Fig. (a). Here, $\mathbf{a}_n$ must be directed towards the center of the circular path (positive n axis).

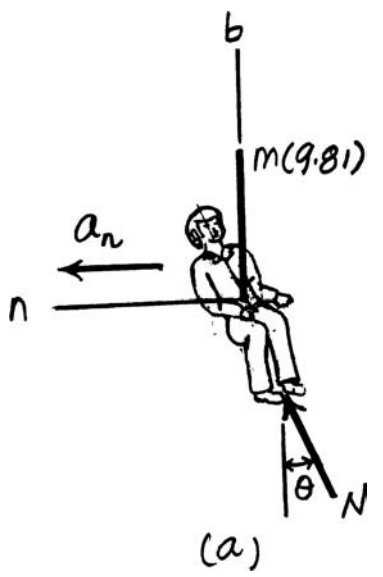

(a)

Equations of Motion: The speed of the passenger is $v = \left(80\,\frac{\text{km}}{\text{h}}\right)\left(\frac{1000\text{ m}}{1\text{ km}}\right)\left(\frac{1\text{ h}}{3600\text{ s}}\right) = 22.22$ m/s. Thus, the normal component of the passenger's acceleration is given by $a_n = \frac{v^2}{\rho} = \frac{22.22^2}{100} = 4.938\text{ m/s}^2$. By referring to Fig. (a),

$$+\uparrow \Sigma F_b = 0; \qquad N\cos\theta - m(9.81) = 0 \qquad N = \frac{9.81m}{\cos\theta}$$

$$\overset{+}{\leftarrow} \Sigma F_n = ma_n; \qquad \frac{9.81m}{\cos\theta}\sin\theta = m(4.938)$$

$$\theta = 26.7^\circ \qquad \textbf{Ans.}$$

© 2010 Pearson Education, Inc., Upper Saddle River, NJ. All rights reserved. This material is protected under all copyright laws as they currently exist. No portion of this material may be reproduced, in any form or by any means, without permission in writing from the publisher.

***13–64.** The ball has a mass m and is attached to the cord of length l. The cord is tied at the top to a swivel and the ball is given a velocity $\mathbf{v}_0$. Show that the angle θ which the cord makes with the vertical as the ball travels around the circular path must satisfy the equation $\tan\theta \sin\theta = v_0^2/gl$. Neglect air resistance and the size of the ball.

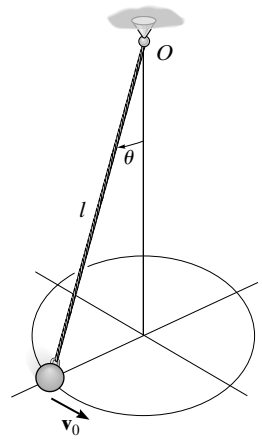

$\overset{+}{\rightarrow} \Sigma F_n = ma_n; \qquad T\sin\theta = m\left(\dfrac{v_0^2}{r}\right)$

$+\uparrow \Sigma F_b = 0; \qquad T\cos\theta - mg = 0$

Since $r = l\sin\theta \qquad T = \dfrac{mv_0^2}{l\sin^2\theta}$

$$\left(\frac{mv_0^2}{l}\right)\left(\frac{\cos\theta}{\sin^2\theta}\right) = mg$$

$$\tan\theta\sin\theta = \frac{v_0^2}{gl}$$

Q.E.D.

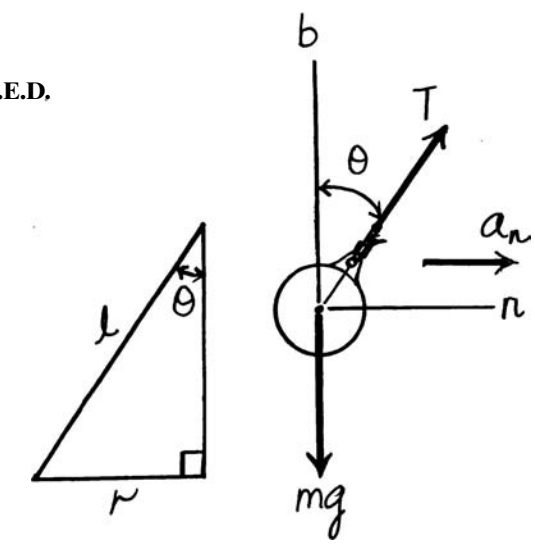

© 2010 Pearson Education, Inc., Upper Saddle River, NJ. All rights reserved. This material is protected under all copyright laws as they currently exist. No portion of this material may be reproduced, in any form or by any means, without permission in writing from the publisher.

•13–65. The smooth block B, having a mass of 0.2 kg, is attached to the vertex A of the right circular cone using a light cord. If the block has a speed of 0.5 m/s around the cone, determine the tension in the cord and the reaction which the cone exerts on the block. Neglect the size of the block.

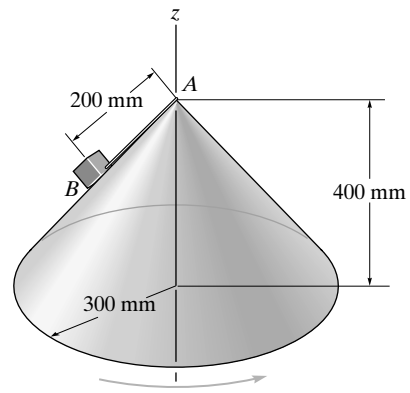

$$\frac{\rho}{200} = \frac{300}{500}; \qquad \rho = 120 \text{ mm} = 0.120 \text{ m}$$

$$+\nearrow \Sigma F_y = ma_y; \qquad T - 0.2(9.81)\left(\frac{4}{5}\right) = \left[0.2\left(\frac{(0.5)^2}{0.120}\right)\right]\left(\frac{3}{5}\right)$$

$$T = 1.82 \text{ N} \qquad \textbf{Ans.}$$

$$+\nwarrow \Sigma F_x = ma_x; \qquad N_B - 0.2(9.81)\left(\frac{3}{5}\right) = -\left[0.2\left(\frac{(0.5)^2}{0.120}\right)\right]\left(\frac{4}{5}\right)$$

$$N_B = 0.844 \text{ N} \qquad \textbf{Ans.}$$

Also,

$$\overset{+}{\rightarrow} \Sigma F_n = ma_n; \qquad T\left(\frac{3}{5}\right) - N_B\left(\frac{4}{5}\right) = 0.2\left(\frac{(0.5)^2}{0.120}\right)$$

$$+\uparrow \Sigma F_b = 0; \qquad T\left(\frac{4}{5}\right) + N_B\left(\frac{3}{5}\right) - 0.2(9.81) = 0$$

$$T = 1.82 \text{ N} \qquad \textbf{Ans.}$$

$$N_B = 0.844 \text{ N} \qquad \textbf{Ans.}$$

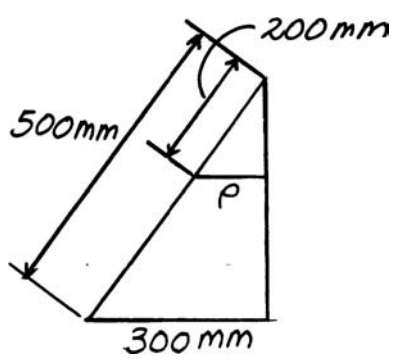

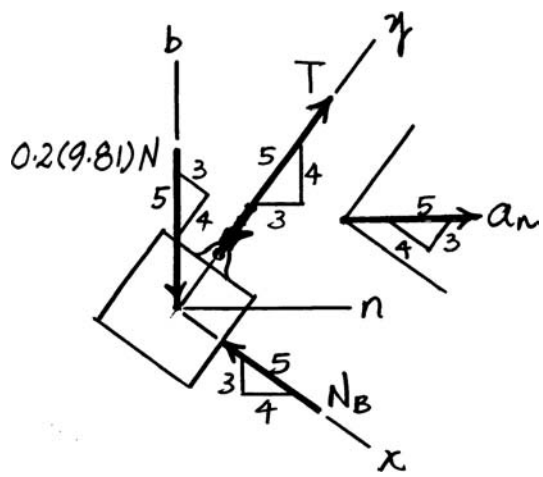

© 2010 Pearson Education, Inc., Upper Saddle River, NJ. All rights reserved. This material is protected under all copyright laws as they currently exist. No portion of this material may be reproduced, in any form or by any means, without permission in writing from the publisher.

13–66. Determine the minimum coefficient of static friction between the tires and the road surface so that the 1.5-Mg car does not slide as it travels at 80 km/h on the curved road. Neglect the size of the car.

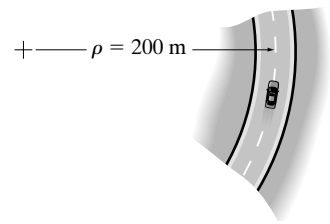

Free-Body Diagram: The frictional force $\mathbf{F}_f$ developed between the tires and the road surface and $\mathbf{a}_n$ must be directed towards the center of curvature (positive n axis) as indicated on the free-body diagram of the car, Fig. (a).

Equations of Motion: Here, the speed of the car is $v = \left(80\,\frac{\text{km}}{\text{h}}\right)\left(\frac{1000\text{ m}}{1\text{ km}}\right)\left(\frac{1\text{ h}}{3600\text{ s}}\right) = 22.22$ m/s. Realizing that $a_n = \frac{v^2}{\rho} = \frac{22.22^2}{20} = 2.469$ m/s^2 and referring to Fig. (a),

$+\nwarrow \Sigma F_n = ma_n;\qquad F_f = 1500(2.469) = 3703.70$ N

The normal reaction acting on the car is equal to the weight of the car, i.e., $N = 1500(9.81) = 14\,715$ N. Thus, the required minimum μ_s is given by

$$\mu_s = \frac{F_f}{N} = \frac{370.70}{14\,715} = 0.252 \qquad \textbf{Ans.}$$

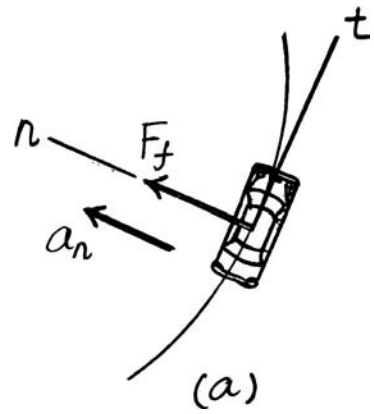

13–67. If the coefficient of static friction between the tires and the road surface is $\mu_s = 0.25$, determine the maximum speed of the 1.5-Mg car without causing it to slide when it travels on the curve. Neglect the size of the car.

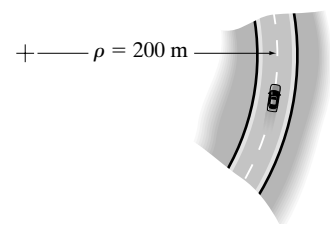

Free-Body Diagram: The frictional force $\mathbf{F}_f$ developed between the tires and the road surface and $\mathbf{a}_n$ must be directed towards the center of curvature (positive n axis) as indicated on the free-body diagram of the car, Fig. (a).

Equations of Motion: Realizing that $a_n = \frac{v^2}{\rho} = \frac{v^2}{200}$ and referring to Fig. (a),

$+\nwarrow \Sigma F_n = ma_n;\qquad F_f = 1500\left(\frac{v^2}{200}\right) = 7.5v^2$

The normal reaction acting on the car is equal to the weight of the car, i.e., $N = 1500(9.81) = 14\,715$ N. When the car is on the verge of sliding,

$$F_f = \mu_s N$$

$$7.5\,v^2 = 0.25(14\,715)$$

$$v = 22.1\text{ m/s} \qquad \textbf{Ans.}$$

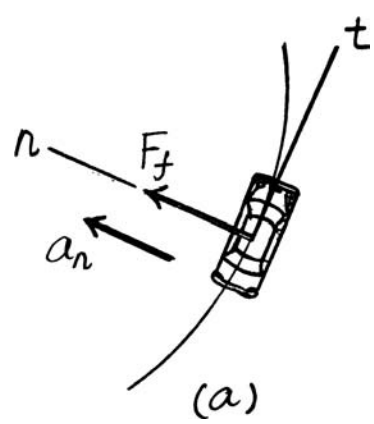

© 2010 Pearson Education, Inc., Upper Saddle River, NJ. All rights reserved. This material is protected under all copyright laws as they currently exist. No portion of this material may be reproduced, in any form or by any means, without permission in writing from the publisher.

***13–68.** At the instant shown, the 3000-lb car is traveling with a speed of 75 ft/s, which is increasing at a rate of 6 ft/s^2. Determine the magnitude of the resultant frictional force the road exerts on the tires of the car. Neglect the size of the car.

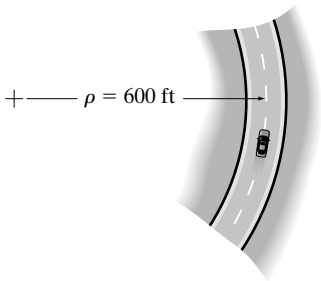

Free-Body Diagram: Here, the force acting on the tires will be resolved into its n and t components $\mathbf{F}_n$ and $\mathbf{F}_t$ as indicated on the free-body diagram of the car, Fig. (a). Here, $\mathbf{a}_n$ must be directed towards the center of curvature of the road (positive n axis).

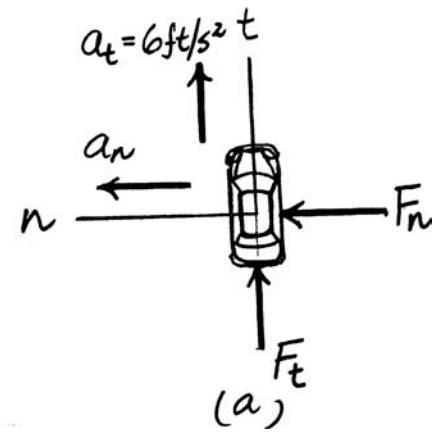

Equations of Motion: Here, $a_n = \dfrac{v^2}{\rho} = \dfrac{75^2}{600} = 9.375 \text{ ft/s}^2$. By referring to Fig. (a),

$$+\uparrow \Sigma F_t = ma_t; \qquad F_t = \frac{3000}{32.2}(6) = 559.01 \text{ lb}$$

$$\overset{+}{\leftarrow} \Sigma F_n = ma_n; \qquad F_n = \frac{3000}{32.2}(9.375) = 873.45 \text{ lb}$$

Thus, the magnitude of force $\mathbf{F}$ acting on the tires is

$$F = \sqrt{F_t^{\,2} + F_n^{\,2}} = \sqrt{559.01^2 + 873.45^2} = 1037 \text{ lb} \qquad \textbf{Ans.}$$

© 2010 Pearson Education, Inc., Upper Saddle River, NJ. All rights reserved. This material is protected under all copyright laws as they currently exist. No portion of this material may be reproduced, in any form or by any means, without permission in writing from the publisher.

•13–69. Determine the maximum speed at which the car with mass m can pass over the top point A of the vertical curved road and still maintain contact with the road. If the car maintains this speed, what is the normal reaction the road exerts on the car when it passes the lowest point B on the road?

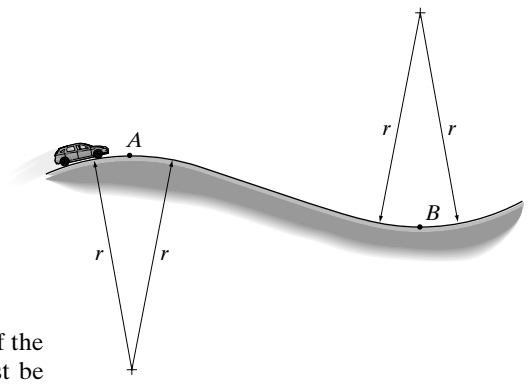

Free-Body Diagram: The free-body diagram of the car at the top and bottom of the vertical curved road are shown in Figs. (a) and (b), respectively. Here, $\mathbf{a}_n$ must be directed towards the center of curvature of the vertical curved road (positive n axis).

Equations of Motion: When the car is on top of the vertical curved road, it is required that its tires are about to lose contact with the road surface. Thus, $N = 0$. Realizing that $a_n = \frac{v^2}{\rho} = \frac{v^2}{r}$ and referring to Fig. (a),

$$+\downarrow \Sigma F_n = ma_n; \qquad mg = m\left(\frac{v^2}{r}\right) \qquad v = \sqrt{gr} \qquad \textbf{Ans.}$$

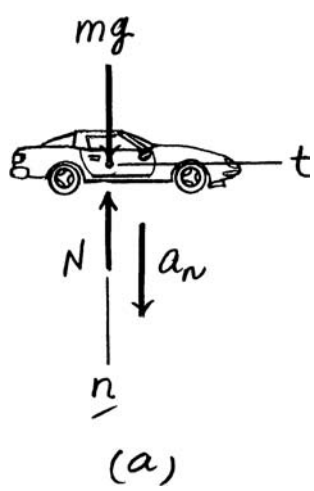

Using the result of v, the normal component of car acceleration is $a_n = \frac{v^2}{\rho} = \frac{gr}{r} = g$ when it is at the lowest point on the road. By referring to Fig. (b),

$$+\uparrow \Sigma F_n = ma_n; \qquad N - mg = mg$$

$$N = 2mg \qquad \textbf{Ans.}$$

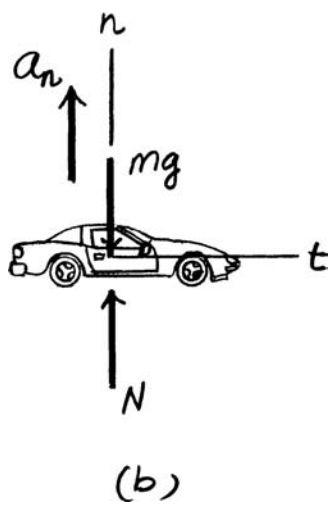

© 2010 Pearson Education, Inc., Upper Saddle River, NJ. All rights reserved. This material is protected under all copyright laws as they currently exist. No portion of this material may be reproduced, in any form or by any means, without permission in writing from the publisher.

13–70. A 5-Mg airplane is flying at a constant speed of 350 km/h along a horizontal circular path of radius $r = 3000\,\text{m}$. Determine the uplift force **L** acting on the airplane and the banking angle θ. Neglect the size of the airplane.

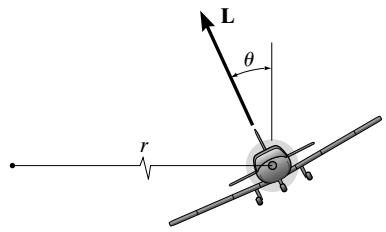

Free-Body Diagram: The free-body diagram of the airplane is shown in Fig. (a). Here, $\mathbf{a}_n$ must be directed towards the center of curvature (positive n axis).

Equations of Motion: The speed of the airplane is $v = \left(350\,\frac{\text{km}}{\text{h}}\right)\left(\frac{1000\text{ m}}{1\text{ km}}\right)\left(\frac{1\text{ h}}{3600\text{ s}}\right) = 97.22\text{ m/s}$. Realizing that $a_n = \frac{v^2}{\rho} = \frac{97.22^2}{3000} = 3.151\text{ m/s}^2$ and referring to Fig. (a),

$+\uparrow \Sigma F_b = 0;$ $\quad T\cos\theta - 5000(9.81) = 0$ **(1)**

$\overset{+}{\leftarrow} \Sigma F_n = ma_n;$ $\quad T\sin\theta = 5000(3.151)$ **(2)**

Solving Eqs. (1) and (2) yields

$\theta = 17.8°$ $\quad T = 51517.75 = 51.5\text{ kN}$ **Ans.**

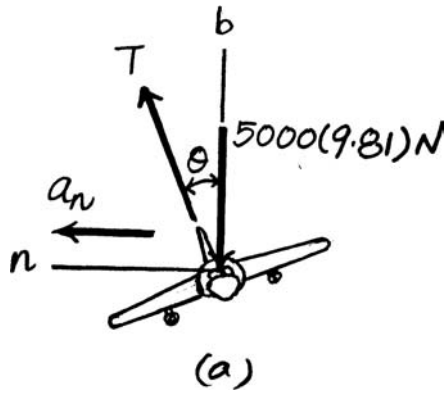

13–71. A 5-Mg airplane is flying at a constant speed of 350 km/h along a horizontal circular path. If the banking angle $\theta = 15°$, determine the uplift force **L** acting on the airplane and the radius r of the circular path. Neglect the size of the airplane.

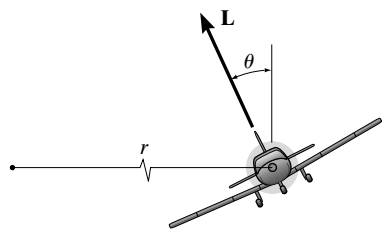

Free-Body Diagram: The free-body diagram of the airplane is shown in Fig. (a). Here, $\mathbf{a}_n$ must be directed towards the center of curvature (positive n axis).

Equations of Motion: The speed of the airplane is $v = \left(350\,\frac{\text{km}}{\text{h}}\right)\left(\frac{1000\text{ m}}{1\text{ km}}\right)\left(\frac{1\text{ h}}{3600\text{ s}}\right) = 97.22\text{ m/s}$. Realizing that $a_n = \frac{v^2}{\rho} = \frac{97.22^2}{r}$ and referring to Fig. (a),

$+\uparrow \Sigma F_b = 0;$ $\quad L\cos 15° - 5000(9.81) = 0$

$L = 50780.30\text{ N} = 50.8\text{ kN}$ **Ans.**

$\overset{+}{\leftarrow} \Sigma F_n = ma_n;$ $\quad 50780.30\sin 15° = 5000\left(\frac{97.22^2}{r}\right)$

$r = 3595.92\text{ m} = 3.60\text{ km}$ **Ans.**

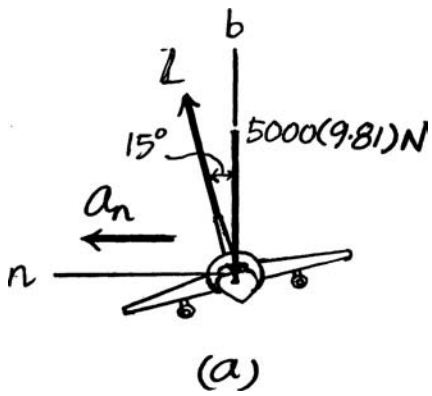

© 2010 Pearson Education, Inc., Upper Saddle River, NJ. All rights reserved. This material is protected under all copyright laws as they currently exist. No portion of this material may be reproduced, in any form or by any means, without permission in writing from the publisher.

***13–72.** The 0.8-Mg car travels over the hill having the shape of a parabola. If the driver maintains a constant speed of 9 m/s, determine both the resultant normal force and the resultant frictional force that all the wheels of the car exert on the road at the instant it reaches point A. Neglect the size of the car.

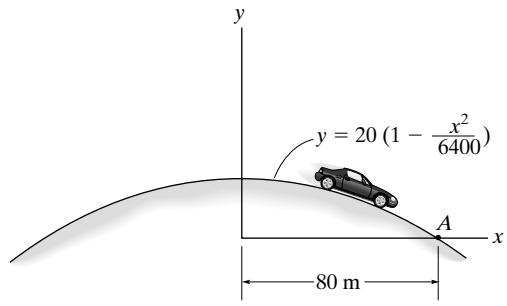

Geometry: Here, $\frac{dy}{dx} = -0.00625x$ and $\frac{d^2y}{dx^2} = -0.00625$. The slope angle θ at point A is given by

$$\tan\theta = \left.\frac{dy}{dx}\right|_{x=80\text{ m}} = -0.00625(80) \qquad \theta = -26.57°$$

and the radius of curvature at point A is

$$\rho = \frac{[1 + (dy/dx)^2]^{3/2}}{|d^2y/dx^2|} = \left.\frac{[1 + (-0.00625x)^2]^{3/2}}{|-0.00625|}\right|_{x=80\text{ m}} = 223.61\text{ m}$$

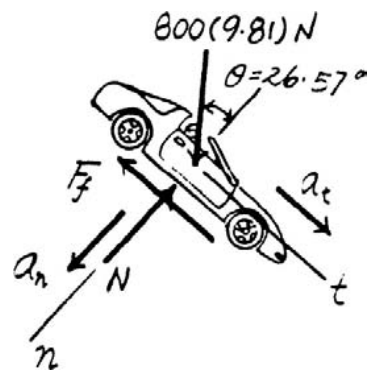

Equations of Motion: Here, $a_t = 0$. Applying Eq. 13–8 with $\theta = 26.57°$ and $\rho = 223.61$ m, we have

$$\Sigma F_t = ma_t; \qquad 800(9.81)\sin 26.57° - F_f = 800(0)$$

$$F_f = 3509.73\text{ N} = 3.51\text{ kN} \qquad \textbf{Ans.}$$

$$\Sigma F_n = ma_n; \qquad 800(9.81)\cos 26.57° - N = 800\left(\frac{9^2}{223.61}\right)$$

$$N = 6729.67\text{ N} = 6.73\text{ kN} \qquad \textbf{Ans.}$$

© 2010 Pearson Education, Inc., Upper Saddle River, NJ. All rights reserved. This material is protected under all copyright laws as they currently exist. No portion of this material may be reproduced, in any form or by any means, without permission in writing from the publisher.

•13–73. The 0.8-Mg car travels over the hill having the shape of a parabola. When the car is at point A, it is traveling at 9 m/s and increasing its speed at 3 m/s^2. Determine both the resultant normal force and the resultant frictional force that all the wheels of the car exert on the road at this instant. Neglect the size of the car.

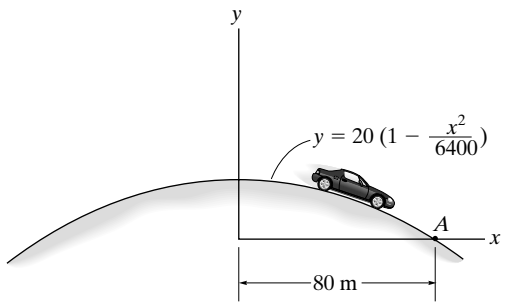

Geometry: Here, $\frac{dy}{dx} = -0.00625x$ and $\frac{d^2y}{dx^2} = -0.00625$. The slope angle θ at point A is given by

$$\tan\theta = \left.\frac{dy}{dx}\right|_{x=80\text{ m}} = -0.00625(80) \qquad \theta = -26.57°$$

and the radius of curvature at point A is

$$\rho = \frac{\left[1 + (dy/dx)^2\right]^{3/2}}{|d^2y/dx^2|} = \left.\frac{\left[1 + (-0.00625x)^2\right]^{3/2}}{|-0.00625|}\right|_{x=80\text{ m}} = 223.61\text{ m}$$

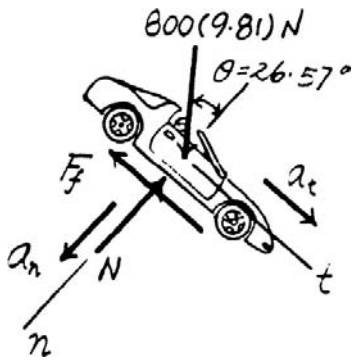

Equation of Motion: Applying Eq. 13–8 with $\theta = 26.57°$ and $\rho = 223.61$ m, we have

$$\Sigma F_t = ma_t; \qquad 800(9.81)\sin 26.57° - F_f = 800(3)$$

$$F_f = 1109.73\text{ N} = 1.11\text{ kN} \qquad \textbf{Ans.}$$

$$\Sigma F_n = ma_n; \qquad 800(9.81)\cos 26.57° - N = 800\left(\frac{9^2}{223.61}\right)$$

$$N = 6729.67\text{ N} = 6.73\text{ kN} \qquad \textbf{Ans.}$$

© 2010 Pearson Education, Inc., Upper Saddle River, NJ. All rights reserved. This material is protected under all copyright laws as they currently exist. No portion of this material may be reproduced, in any form or by any means, without permission in writing from the publisher.

13–74. The 6-kg block is confined to move along the smooth parabolic path. The attached spring restricts the motion and, due to the roller guide, always remains horizontal as the block descends. If the spring has a stiffness of $k = 10$ N/m, and unstretched length of 0.5 m, determine the normal force of the path on the block at the instant $x = 1$ m when the block has a speed of 4 m/s. Also, what is the rate of increase in speed of the block at this point? Neglect the mass of the roller and the spring.

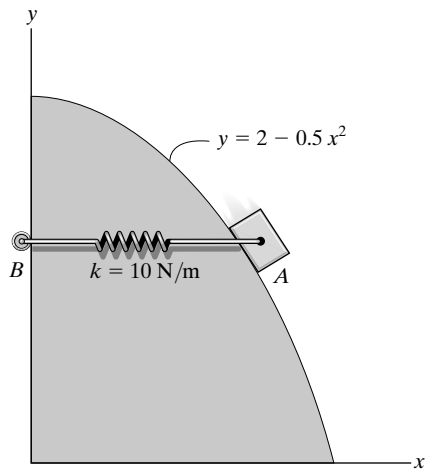

$$v = 2 - 0.5x^2$$

$$\frac{dv}{dx} = \tan\theta = -x\Big|_{x=1} = -1 \qquad \theta = -45°$$

$$\frac{d^2y}{dx^2} = -1$$

$$\rho = \frac{\left[1 + \left(\frac{dy}{dx}\right)^2\right]^{\frac{3}{2}}}{\left|\frac{d^2y}{dx^2}\right|} = \frac{\left[1 + (-1)^2\right]^{\frac{3}{2}}}{|-1|} = 2.8284 \text{ m}$$

$$F_s = kx = 10(1 - 0.5) = 5 \text{ N}$$

$$+\swarrow \Sigma F_n = ma_n; \qquad 6(9.81)\cos 45° - N + 5\cos 45° = 6\left(\frac{(4)^2}{2.8284}\right)$$

$$N = 11.2 \text{ N} \qquad \textbf{Ans.}$$

$$+\searrow \Sigma F_t = ma_t; \qquad 6(9.81)\sin 45° - 5\sin 45° = 6a_t$$

$$a_t = 6.35 \text{ m/s}^2 \qquad \textbf{Ans.}$$

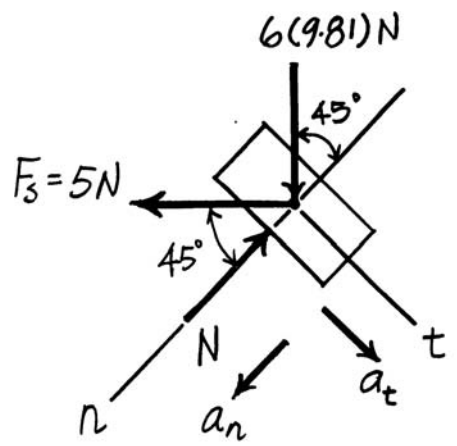

13–75. Prove that if the block is released from rest at point B of a smooth path of *arbitrary shape*, the speed it attains when it reaches point A is equal to the speed it attains when it falls freely through a distance h; i.e., $v = \sqrt{2gh}$.

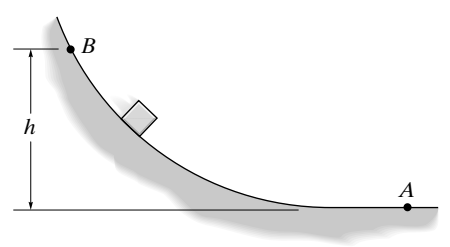

$$+\searrow \Sigma F_t = ma_t; \qquad mg\sin\theta = ma_t \qquad a_t = g\sin\theta$$

$$v\,dv = a_t\,ds = g\sin\theta\,ds \qquad \text{However} \quad dy = ds\sin\theta$$

$$\int_0^v v\,dv = \int_0^h g\,dy$$

$$\frac{v^2}{2} = gh$$

$$v = \sqrt{2gh} \qquad \textbf{Q.E.D.}$$

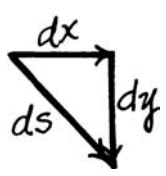

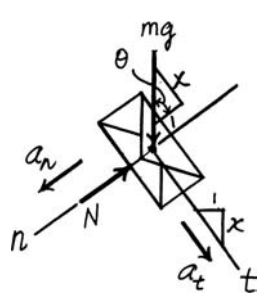

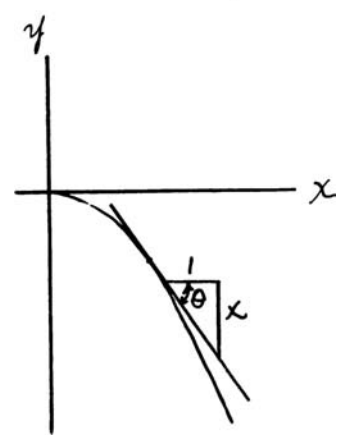

© 2010 Pearson Education, Inc., Upper Saddle River, NJ. All rights reserved. This material is protected under all copyright laws as they currently exist. No portion of this material may be reproduced, in any form or by any means, without permission in writing from the publisher.

***13–76.** A toboggan and rider of total mass 90 kg travel down along the (smooth) slope defined by the equation $y = 0.08x^2$. At the instant $x = 10$ m, the toboggan's speed is 5 m/s. At this point, determine the rate of increase in speed and the normal force which the slope exerts on the toboggan. Neglect the size of the toboggan and rider for the calculation.

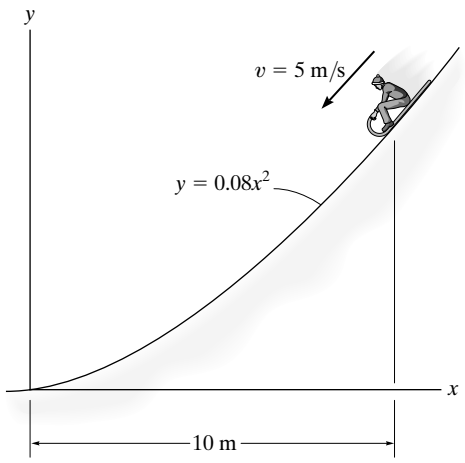

Geometry: Here, $\frac{dy}{dx} = 0.16x$ and $\frac{d^2y}{dx^2} = 0.16$. The slope angle θ at $x = 10$ m is given by

$$\tan\theta = \left.\frac{dy}{dx}\right|_{x=10\text{ m}} = 0.16(10) \qquad \theta = 57.99°$$

and the radius of curvature at $x = 10$ m is

$$\rho = \frac{\left[1 + (dy/dx)^2\right]^{3/2}}{|d^2y/dx^2|} = \left.\frac{\left[1 + (0.16x)^2\right]^{3/2}}{|0.16|}\right|_{x=10\text{ m}} = 41.98\text{ m}$$

Equations of Motion: Applying Eq. 13–8 with $\theta = 57.99°$ and $\rho = 41.98$ m, we have

$$\Sigma F_t = ma_t; \qquad 90(9.81)\sin 57.99° = 90a_t$$

$$a_t = 8.32\text{ m/s}^2 \qquad \textbf{Ans.}$$

$$\Sigma F_n = ma_n; \qquad -90(9.81)\cos 57.99° + N = 90\left(\frac{5^2}{41.98}\right)$$

$$N = 522\text{ N} \qquad \textbf{Ans.}$$

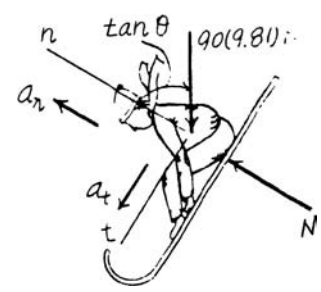

© 2010 Pearson Education, Inc., Upper Saddle River, NJ. All rights reserved. This material is protected under all copyright laws as they currently exist. No portion of this material may be reproduced, in any form or by any means, without permission in writing from the publisher.

•13–77. The skier starts from rest at $A(10\text{ m}, 0)$ and descends the smooth slope, which may be approximated by a parabola. If she has a mass of 52 kg, determine the normal force the ground exerts on the skier at the instant she arrives at point B. Neglect the size of the skier. *Hint:* Use the result of Prob. 13–75.

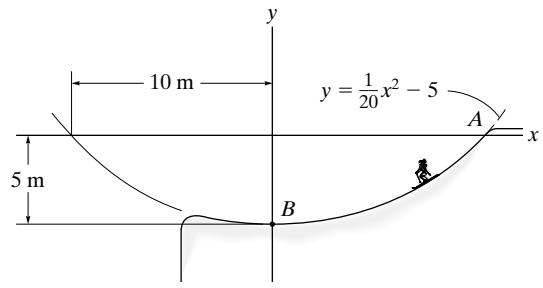

Geometry: Here, $\dfrac{dy}{dx} = \dfrac{1}{10}x$ and $\dfrac{d^2y}{dx^2} = \dfrac{1}{10}$. The slope angle θ at point B is given by

$$\tan\theta = \left.\frac{dy}{dx}\right|_{x=0\text{ m}} = 0 \qquad \theta = 0°$$

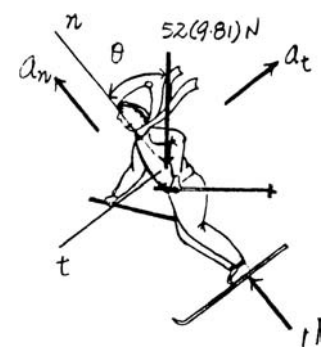

and the radius of curvature at point B is

$$\rho = \left.\frac{\left[1 + (dy/dx)^2\right]^{3/2}}{|d^2y/dx^2|} = \frac{\left[1 + \left(\frac{1}{10}x\right)^2\right]^{3/2}}{|1/10|}\right|_{x=0\text{ m}} = 10.0\text{ m}$$

Equations of Motion:

$+\swarrow \Sigma F_t = ma_t;$ $\qquad 52(9.81)\sin\theta = -52a_t \qquad a_t = -9.81\sin\theta$

$+\nwarrow \Sigma F_n = ma_n;$ $\qquad N - 52(9.81)\cos\theta = m\left(\dfrac{v^2}{\rho}\right)$ **(1)**

Kinematics: The speed of the skier can be determined using $v\,dv = a_t\,ds$. Here, a_t must be in the direction of positive ds. Also, $ds = \sqrt{1 + (dy/dx)^2}dx = \sqrt{1 + \frac{1}{100}x^2}dx$

Here, $\tan\theta = \dfrac{1}{10}x$. Then, $\sin\theta = \dfrac{x}{10\sqrt{1 + \frac{1}{100}x^2}}$.

$$(+\ ) \qquad \int_0^v v\,dv = -9.81\int_{10\text{ m}}^0 \left(\frac{x}{10\sqrt{1 + \frac{1}{100}x^2}}\right)\left(\sqrt{1 + \tfrac{1}{100}x^2}dx\right)$$

$$v^2 = 9.81\text{ m}^2/\text{s}^2$$

Substituting $v^2 = 98.1\text{ m}^2/\text{s}^2$, $\theta = 0°$, and $\rho = 10.0$ m into Eq.(1) yields

$$N - 52(9.81)\cos 0° = 52\left(\frac{98.1}{10.0}\right)$$

$$N = 1020.24\text{ N} = 1.02\text{ kN} \qquad \textbf{Ans.}$$

© 2010 Pearson Education, Inc., Upper Saddle River, NJ. All rights reserved. This material is protected under all copyright laws as they currently exist. No portion of this material may be reproduced, in any form or by any means, without permission in writing from the publisher.

13–78. The 5-lb box is projected with a speed of 20 ft/s at A up the vertical circular smooth track. Determine the angle θ when the box leaves the track.

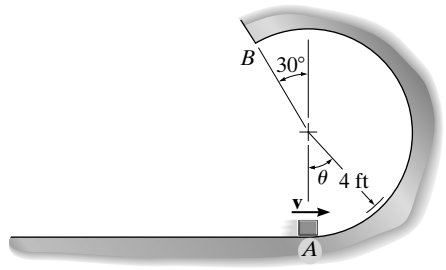

Free-Body Diagram: The free-body diagram of the box at an arbitrary position θ is shown in Fig. (a). Here, $\mathbf{a}_n$ must be directed towards the center of the vertical circular path (positive n axis), while $\mathbf{a}_t$ is assumed to be directed toward the positive t axis.

Equations of Motion: Here, $a_n = \dfrac{v^2}{\rho} = \dfrac{v^2}{4}$. Also, the box is required to leave the track, so that $N = 0$. By referring to Fig. (a),

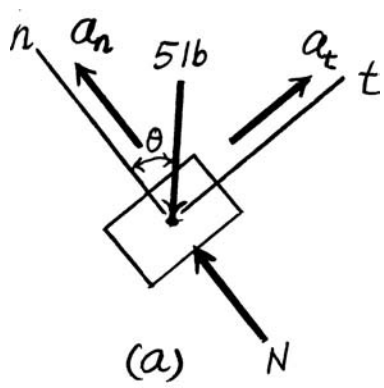

$$+\nearrow \Sigma F_t = ma_t; \qquad -5\sin\theta = \frac{5}{32.2}a_t$$

$$a_t = -(32.2\sin\theta)\ \text{ft/s}^2$$

$$+\nwarrow \Sigma F_n = ma_n; \qquad -5\cos\theta = \frac{5}{32.2}\left(\frac{v^2}{4}\right)$$

$$v^2 = -128.8\cos\theta \qquad \textbf{(1)}$$

Kinematics: Using the result of $\mathbf{a}_t$, the speed of the box can be determined by integrating the kinematic equation $v\,dv = a_t\,ds$, where $ds = r\,d\theta = 4\,d\theta$. Using the initial condition $v = 20$ ft/s at $\theta = 0°$ as the integration limit,

$$\int_{20\text{ft/s}}^{v} v\,dv = \int_{0°}^{\theta} -32.2\sin\theta(4\,d\theta)$$

$$\left.\frac{v^2}{2}\right|_{20\text{ ft/s}}^{v} = 128.8\cos\theta\Big|_{0°}^{\theta}$$

$$v^2 = 257.6\cos\theta + 142.4 \qquad \textbf{(2)}$$

Equating Eqs. (1) and (2),

$$386.4\cos\theta + 142.4 = 0$$

$$\theta = 111.62° = 112° \qquad \textbf{Ans.}$$

© 2010 Pearson Education, Inc., Upper Saddle River, NJ. All rights reserved. This material is protected under all copyright laws as they currently exist. No portion of this material may be reproduced, in any form or by any means, without permission in writing from the publisher.

13–79. Determine the minimum speed that must be given to the 5-lb box at A in order for it to remain in contact with the circular path. Also, determine the speed of the box when it reaches point B.

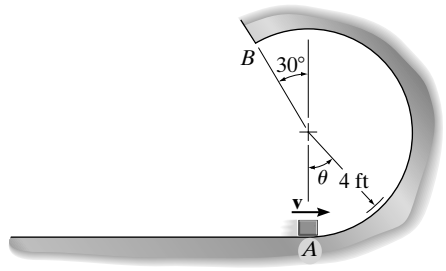

Free-Body Diagram: The free-body diagram of the box at an arbitrary position θ is shown in Fig. (a). Here, $\mathbf{a}_n$ must be directed towards the center of the vertical circular path (positive n axis), while $\mathbf{a}_t$ is assumed to be directed toward the positive t axis.

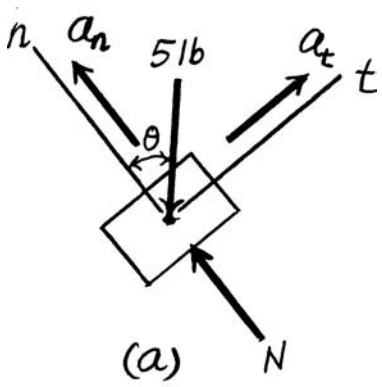

Equations of Motion: Here, $a_n = \dfrac{v^2}{\rho} = \dfrac{v^2}{4}$. Also, the box is required to leave the track, so that $N = 0$. By referring to Fig. (a),

$$+\nearrow \Sigma F_t = ma_t; \qquad -5\sin\theta = \frac{5}{32.2}a_t$$

$$a_t = -(32.2\sin\theta)\ \text{ft/s}^2$$

$$+\nwarrow \Sigma F_n = ma_n; \qquad N - 5\cos\theta = \frac{5}{32.2}\left(\frac{v^2}{4}\right)$$

$$N = 0.03882v^2 + 5\cos\theta \qquad \textbf{(1)}$$

Kinematics: Using the result of $\mathbf{a}_t$, the speed of the box can be determined by intergrating the kinematic equation $v\,dv = a_t\,ds$, where $ds = r\,d\theta = 4\,d\theta$. Using the initial condition $v = v_0$ at $\theta = 0°$ as the integration limit,

$$\int_{v_0}^{v} v\,dv = \int_{0°}^{\theta} -32.2\sin\theta(4d\theta)$$

$$\left.\frac{v^2}{2}\right|_{v_0}^{v} = 128.8\cos\theta\Big|_{0°}^{\theta}$$

$$v^2 = 257.6\cos\theta - 257.6 + {v_0}^2 \qquad \textbf{(2)}$$

Provided the box does not leave the vertical circular path at $\theta = 180°$, then it will remain in contact with the path. Thus, it is required that the box is just about to leave the path at $\theta = 180°$, Thus, $N = 0$. Substituting these two values into Eq. (1),

$$0 = 00.03882v^2 + 5\cos 180°$$

$$v = 11.35\ \text{ft/s}$$

Substituting the result of v and $v_0 = v_{\min}$ into Eq. (2),

$$11.35^2 = 257.6\cos 180° - 257.6 + {v_{\min}}^2$$

$$v_{\min} = 25.38\ \text{ft/s} = 25.4\ \text{ft/s} \qquad \textbf{Ans.}$$

At point B, $\theta = 210°$. Substituting this value and $v_0 = v_{\min} = 25.38$ ft/s into Eq. (2),

$${v_B}^2 = 257.6\cos 210° - 257.6 + 25.38^2$$

$$v_B = 12.8\ \text{ft/s} \qquad \textbf{Ans.}$$

© 2010 Pearson Education, Inc., Upper Saddle River, NJ. All rights reserved. This material is protected under all copyright laws as they currently exist. No portion of this material may be reproduced, in any form or by any means, without permission in writing from the publisher.

***13–80.** The 800-kg motorbike travels with a constant speed of 80 km/h up the hill. Determine the normal force the surface exerts on its wheels when it reaches point A. Neglect its size.

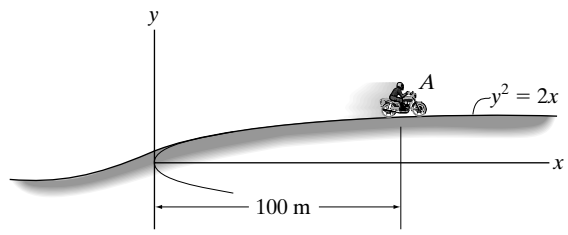

Geometry: Here, $y = \sqrt{2}x^{1/2}$. Thus, $\frac{dy}{dx} = \frac{\sqrt{2}}{2x^{1/2}}$ and $\frac{d^2y}{dx^2} = -\frac{\sqrt{2}}{4x^{3/2}}$. The angle that the hill slope at A makes with the horizontal is

$$\theta = \tan^{-1}\left(\frac{dy}{dx}\right)\bigg|_{x=100\text{ m}} = \tan^{-1}\left(\frac{\sqrt{2}}{2x^{1/2}}\right)\bigg|_{x=100\text{ m}} = 4.045°$$

The radius of curvature of the hill at A is given by

$$\rho_A = \left.\frac{\left[1 + \left(\frac{dy}{dx}\right)^2\right]^{3/2}}{\left|\frac{d^2y}{dx^2}\right|}\right|_{x=100\text{ m}} = \frac{\left[1 + \left(\frac{\sqrt{2}}{2(100^{1/2})}\right)^2\right]^{3/2}}{\left|-\frac{\sqrt{2}}{4(100^{3/2})}\right|} = 2849.67\text{ m}$$

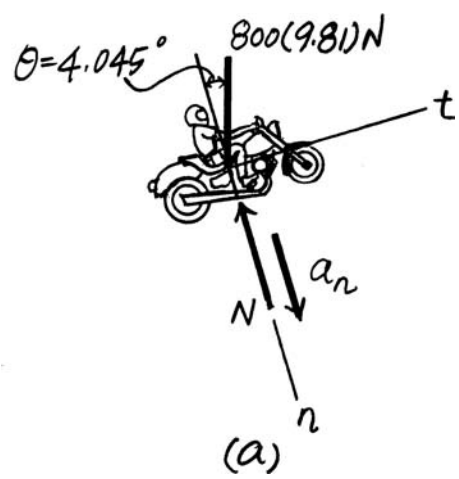

Free-Body Diagram: The free-body diagram of the motorcycle is shown in Fig. (a). Here, $\mathbf{a}_n$ must be directed towards the center of curvature (positive n axis).

Equations of Motion: The speed of the motorcycle is

$$v = \left(80\,\frac{\text{km}}{\text{h}}\right)\left(\frac{1000\text{ m}}{1\text{ km}}\right)\left(\frac{1\text{ h}}{3600\text{ s}}\right) = 22.22\text{ m/s}$$

Thus, $a_n = \frac{v^2}{\rho_A} = \frac{22.22^2}{2849.67} = 0.1733\text{ m/s}^2$. By referring to Fig. (a),

$\searrow + \Sigma F_n = ma_n;$ $\quad 800(9.81)\cos 4.045° - N = 800(0.1733)$

$N = 7689.82\text{ N} = 7.69\text{ kN}$ **Ans.**

© 2010 Pearson Education, Inc., Upper Saddle River, NJ. All rights reserved. This material is protected under all copyright laws as they currently exist. No portion of this material may be reproduced, in any form or by any means, without permission in writing from the publisher.

•13–81. The 1.8-Mg car travels up the incline at a constant speed of 80 km/h. Determine the normal reaction of the road on the car when it reaches point A. Neglect its size.

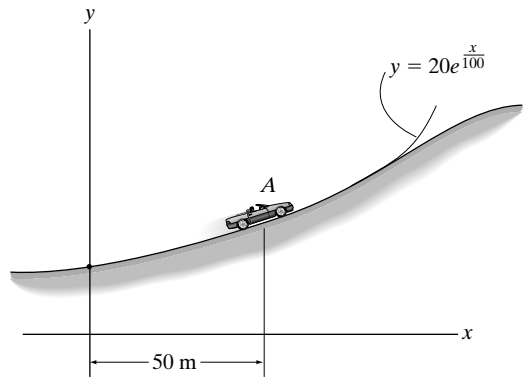

Geometry: Here, $\frac{dy}{dx} = 20\left(\frac{1}{100}\right)e^{x/100} = 0.2e^{x/100}$ and $\frac{d^2y}{dx^2} = 0.2\left(\frac{1}{100}\right)e^{x/100} = 0.002e^{x/100}$. The angle that the slope of the road at A makes with the horizontal is $\theta = \tan^{-1}\left(\frac{dy}{dx}\right)\Big|_{x=50\text{ m}} = \tan^{-1}\left(0.2e^{50/100}\right) = 18.25°$. The radius of curvature of the road at A is given by

$$\rho_A = \left.\frac{\left[1 + \left(\frac{dy}{dx}\right)^2\right]^{3/2}}{\left|\frac{d^2y}{dx^2}\right|}\right|_{x=50\text{ m}} = \frac{\left[1 + \left(0.2e^{50/100}\right)^2\right]^{3/2}}{\left|0.002e^{50/100}\right|} = 354.05\text{ m}$$

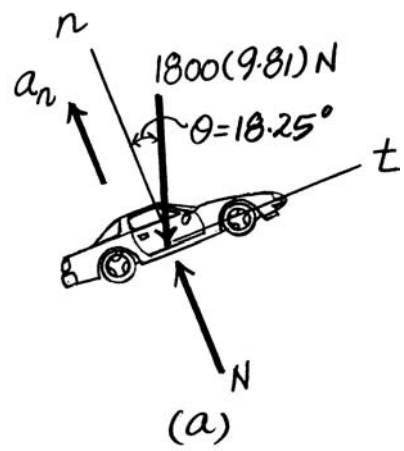

Free-Body Diagram: The free-body diagram of the car is shown in Fig. (a). Here, $\mathbf{a}_n$ must be directed towards the center of curvature (positive n axis).

Equations of Motion: The speed of the car is

$$v = \left(80\frac{\text{km}}{\text{h}}\right)\left(\frac{1000\text{ m}}{1\text{ km}}\right)\left(\frac{1\text{ h}}{3600\text{ s}}\right) = 22.22\text{ m/s}^2$$

Thus, $a_n = \frac{v^2}{\rho_A} = \frac{22.22^2}{354.05} = 1.395\text{ m/s}^2$. By referring to Fig. (a),

$+\nwarrow \Sigma F_n = ma_n;$ $\quad N - 1800(9.81)\cos 18.25° = 1800(1.395)$

$N = 19280.46\text{ N} = 19.3\text{ kN}$ **Ans.**

© 2010 Pearson Education, Inc., Upper Saddle River, NJ. All rights reserved. This material is protected under all copyright laws as they currently exist. No portion of this material may be reproduced, in any form or by any means, without permission in writing from the publisher.

13–82. Determine the maximum speed the 1.5-Mg car can have and still remain in contact with the road when it passes point A. If the car maintains this speed, what is the normal reaction of the road on it when it passes point B? Neglect the size of the car.

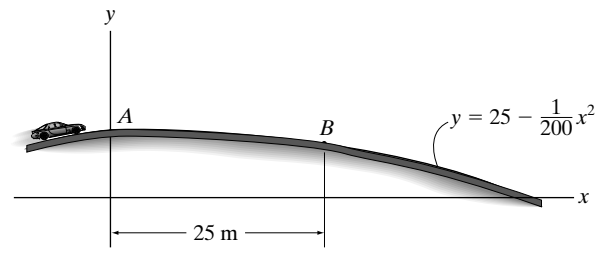

Geometry: Here, $\frac{dx}{dy} = -0.01x$ and $\frac{d^2y}{dx^2} = -0.01$. The angle that the slope of the road makes with the horizontal at A and B are $\theta_A = \tan^{-1}\left(\frac{dy}{dx}\right)\Big|_{x=0\text{ m}}$ $= tan^{-1}(0) = 0°$ and $\theta_B = \tan^{-1}\left(\frac{dy}{dx}\right)\Big|_{x=25\text{ m}} = \tan^{-1}\left(-0.01(25)\right) = -14.04°$. The radius of curvature of the road at A and B are

$$\rho_A = \left.\frac{\left[1 + \left(\frac{dy}{dx}\right)^2\right]^{3/2}}{\left|\frac{d^2y}{dx^2}\right|}\right|_{x=0\text{ m}} = \frac{\left[1 + (0)^2\right]^{3/2}}{0.01} = 100\text{ m}$$

$$\rho_B = \left.\frac{\left[1 + \left(\frac{dy}{dx}\right)^2\right]^{3/2}}{\left|\frac{d^2y}{dx^2}\right|}\right|_{x=25\text{ m}} = \frac{\left[1 + (0.25)^2\right]^{3/2}}{0.01} = 109.52\text{ m}$$

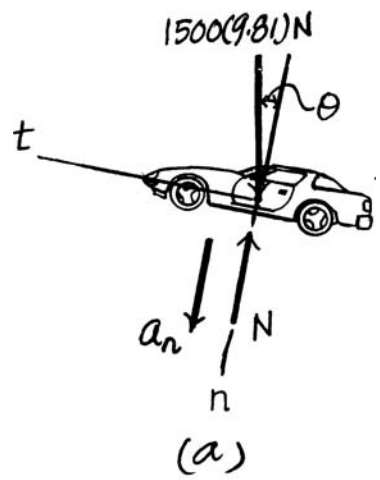

Free-Body Diagram: The free-body diagram of the car at an arbitrary position x is shown in Fig. (a). Here, $\mathbf{a}_n$ must be directed towards the center of curvature of the road (positive n axis).

Equations of Motion: Here, $a_n = \frac{v^2}{\rho}$. By referring to Fig. (a),

$$\Sigma F_n = ma_n; \qquad 1500(9.81)\cos\theta - N = 1500\left(\frac{v^2}{\rho}\right)$$

$$N = 14\,715\cos\theta - \frac{1500v^2}{\rho} \qquad \textbf{(1)}$$

Since the car is required to just about lose contact with the road at A, then $N = N_A = 0$, $\theta = \theta_A = 0$ and $\rho = \rho_A = 100$ m. Substituting these values into Eq. (1),

$$0 = 14\,715\cos 0° - \frac{1500v^2}{100}$$

$$v = 31.32\text{ m/s} = 31.3\text{ m/s} \qquad \textbf{Ans.}$$

When the car is at B, $\theta = \theta_B = 14.04°$ and $\rho = \rho_B = 109.52$ m. Substituting these values into Eq. (1), we obtain

$$N_B = 14\,715\cos 14.04° - \frac{1500\left(31.32^2\right)}{109.52}$$

$$= 839.74\text{N} = 840\text{ N} \qquad \textbf{Ans.}$$

© 2010 Pearson Education, Inc., Upper Saddle River, NJ. All rights reserved. This material is protected under all copyright laws as they currently exist. No portion of this material may be reproduced, in any form or by any means, without permission in writing from the publisher.

13–83. The 5-lb collar slides on the smooth rod, so that when it is at A it has a speed of 10 ft/s. If the spring to which it is attached has an unstretched length of 3 ft and a stiffness of $k = 10$ lb/ft, determine the normal force on the collar and the acceleration of the collar at this instant.

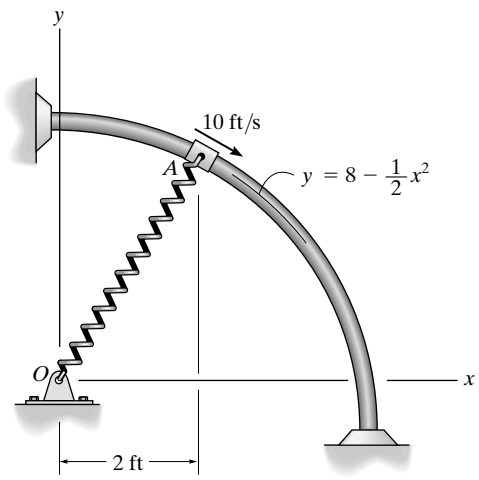

$$v = 8 - \frac{1}{2}x^2$$

$$\frac{dy}{dx} = \tan\theta = -x\Big|_{x=2} = -2 \qquad \theta = -63.435°$$

$$\frac{d^2y}{dx^2} = -1$$

$$\rho = \frac{\left[1 + \left(\frac{dy}{dx}\right)^2\right]^{\frac{3}{2}}}{\left|\frac{d^2y}{dx^2}\right|} = \frac{(1 + (-2)^2)^{\frac{3}{2}}}{|-1|} = 11.18 \text{ ft}$$

$$v = 8 - \frac{1}{2}(2)^2 = 6$$

$$OA = \sqrt{(2)^2 + (6)^2} = 6.3246$$

$$F_s = kx = 10(6.3246 - 3) = 33.246 \text{ lb}$$

$$\tan\phi = \frac{6}{2}\ \phi 1.565°$$

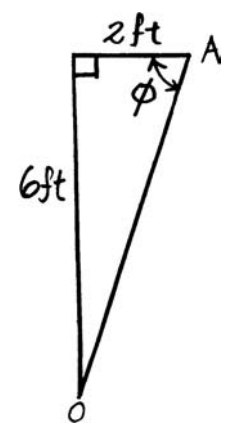

$+\swarrow \Sigma F_n = ma_n;$ $\quad 5\cos 63.435° - N + 33.246\cos 8.1301° = \left(\frac{5}{32.2}\right)\left(\frac{(10)^2}{11.18}\right)$

$N = 33.8$ lb **Ans.**

$+\searrow \Sigma F_t = ma_t;$ $\quad 5\sin 63.435° + 33.246\sin 8.1301° = \left(\frac{5}{32.2}\right)a_t$

$a_t = 59.08$ ft/s^2

$a_n = \frac{v^2}{\rho} = \frac{(10)^2}{11.18} = 8.9443$ ft/s^2

$a = \sqrt{(59.08)^2 + (8.9443)^2} = 59.8$ ft/s^2 **Ans.**

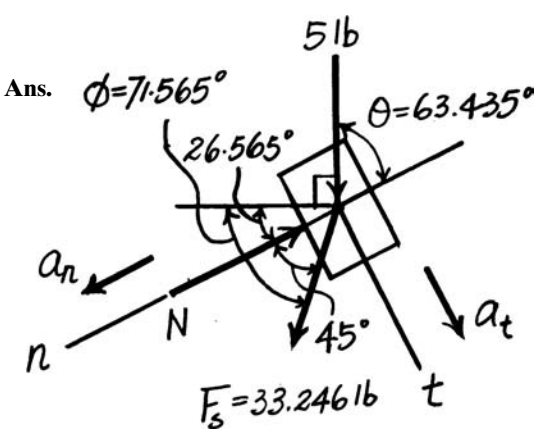

© 2010 Pearson Education, Inc., Upper Saddle River, NJ. All rights reserved. This material is protected under all copyright laws as they currently exist. No portion of this material may be reproduced, in any form or by any means, without permission in writing from the publisher.

***13–84.** The path of motion of a 5-lb particle in the horizontal plane is described in terms of polar coordinates as $r = (2t + 1)$ ft and $\theta = (0.5t^2 - t)$ rad, where t is in seconds. Determine the magnitude of the resultant force acting on the particle when $t = 2$ s.

$r = 2t + 1|_{t=2\,s} = 5$ ft $\quad \dot{r} = 2$ ft/s $\quad \ddot{r} = 0$

$\theta = 0.5t^2 - t|_{t=2\,s} = 0$ rad $\quad \dot{\theta} = t - 1|_{t=2\,s} = 1$ rad/s $\quad \ddot{\theta} = 1$ rad/s^2

$a_r = \ddot{r} - r\dot{\theta}^2 = 0 - 5(1)^2 = -5$ ft/s^2

$a_\theta = r\ddot{\theta} + 2\dot{r}\dot{\theta} = 5(1) + 2(2)(1) = 9$ ft/s^2

$\Sigma F_r = ma_r; \qquad F_r = \dfrac{5}{32.2}(-5) = -0.7764$ lb

$\Sigma F_\theta = ma_\theta; \qquad F_\theta = \dfrac{5}{32.2}(9) = 1.398$ lb

$F = \sqrt{F_r^2 + F_\theta^2} = \sqrt{(-0.7764)^2 + (1.398)^2} = 1.60$ lb **Ans.**

•13–85. Determine the magnitude of the resultant force acting on a 5-kg particle at the instant $t = 2$ s, if the particle is moving along a horizontal path defined by the equations $r = (2t + 10)$ m and $\theta = (1.5t^2 - 6t)$ rad, where t is in seconds.

$r = 2t + 10|_{t=2\,s} = 14$

$\dot{r} = 2$

$\ddot{r} = 0$

$\theta = 1.5t^2 - 6t$

$\dot{\theta} = 3t - 6|_{t=2\,s} = 0$

$\ddot{\theta} = 3$

$a_r = \ddot{r} - r\dot{\theta}^2 = 0 - 0 = 0$

$a_\theta = r\ddot{\theta} + 2\dot{r}\dot{\theta} = 14(3) + 0 = 42$

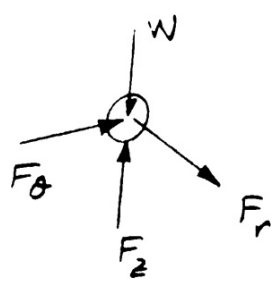

Hence,

$\Sigma F_r = ma_r; \qquad F_r = 5(0) = 0$

$\Sigma F_\theta = ma_\theta; \qquad F_\theta = 5(42) = 210$ N

$F = \sqrt{(F_r)^2 + (F_\theta)^2} = 210$ N **Ans.**

© 2010 Pearson Education, Inc., Upper Saddle River, NJ. All rights reserved. This material is protected under all copyright laws as they currently exist. No portion of this material may be reproduced, in any form or by any means, without permission in writing from the publisher.

13–86. A 2-kg particle travels along a horizontal smooth path defined by

$$r = \left(\frac{1}{4}t^3 + 2\right)\text{m},\ \theta = \left(\frac{t^2}{4}\right)\text{rad},$$

where t is in seconds. Determine the radial and transverse components of force exerted on the particle when $t = 2\text{s}$.

Kinematics: Since the motion of the particle is known, $\mathbf{a}_r$ and $\mathbf{a}_\theta$ will be determined first. The values of $\mathbf{r}$ and the time derivative of r and θ evaluated at $t = 2$ s are

$$r|_{t=2\,\text{s}} = \frac{1}{4}t^3 + 2\bigg|_{t=2\,\text{s}} = 4\text{ m} \qquad \dot{r}|_{t=2\,\text{s}} = \frac{3}{4}t^2\bigg|_{t=2\,\text{s}} = 3\text{ m/s} \qquad \ddot{r}|_{t=2\,\text{s}} = \frac{3}{2}t\bigg|_{t=2\,\text{s}} = 3\text{ m/s}^2$$

$$\dot{\theta} = \frac{t}{2}\bigg|_{t=2\,\text{s}} = 1\text{ rad/s} \qquad \ddot{\theta}|_{t=2\,\text{s}} = 0.5\text{ rad/s}^2$$

Using the above time derivative,

$$a_r = \ddot{r} - r\dot{\theta}^2 = 3 - 4(1^2) = -1\text{ m/s}^2$$

$$a_\theta = r\ddot{\theta} + 2\dot{r}\dot{\theta} = 4(0.5) + 2(3)(1) = 8\text{ m/s}^2$$

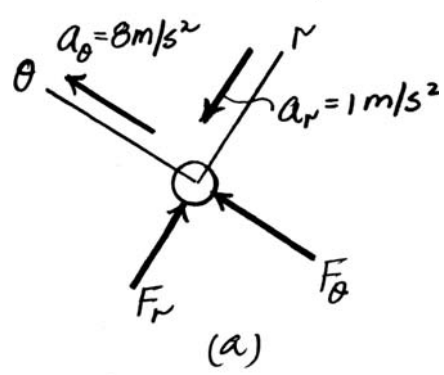

Equations of Motion: By referring to the free-body diagram of the particle in Fig. (a),

$\Sigma F_r = ma_r;$ $\quad F_r = 2(-1) = -2\text{ N}$ **Ans.**

$\Sigma F_\theta = ma_\theta;$ $\quad F_\theta = 2(8) = 16\text{ N}$ **Ans.**

Note: The negative sign indicates that $\mathbf{F}_r$ acts in the opposite sense to that shown on the free-body diagram.

© 2010 Pearson Education, Inc., Upper Saddle River, NJ. All rights reserved. This material is protected under all copyright laws as they currently exist. No portion of this material may be reproduced, in any form or by any means, without permission in writing from the publisher.

13–87. A 2-kg particle travels along a path defined by

$$r = (3 + 2t^2)\,\text{m},\ \theta = \left(\frac{1}{3}t^3 + 2\right)\text{rad}$$

and $z = (5 - 2t^2)\,\text{m}$, where t is in seconds. Determine the r, θ, z components of force that the path exerts on the particle at the instant $t = 1\,\text{s}$.

Kinematics: Since the motion of the particle is known, $\mathbf{a}_r$, $\mathbf{a}_\theta$, and $\mathbf{a}_z$ will be determined first. The values of r and the time derivative of r, θ, and z evaluated at $t = 1$ s are

$$r|_{t=1\,\text{s}} = 3 + 2t^2\Big|_{t=1\,\text{s}} = 5\ \text{m} \qquad \dot{r}|_{t=1\,\text{s}} = 4t|_{t=1\,\text{s}} = 4\ \text{m/s} \qquad \ddot{r}|_{t=1\,\text{s}} = 4\ \text{m/s}^2$$

$$\dot{\theta}|_{t=1\,\text{s}} = t^2\Big|_{t=1\,\text{s}} = 1\ \text{rad/s} \qquad \ddot{\theta}|_{t=1\,\text{s}} = 2t|_{t=1\,\text{s}} = 2\ \text{rad/s}^2$$

$$\dot{z} = -4t \qquad \ddot{z} = -4\ \text{m/s}^2$$

Using the above time derivative,

$$a_r = \ddot{r} - r\dot{\theta}^2 = 4 - 5(1^2) = -1\ \text{m/s}^2$$

$$a_\theta = r\ddot{\theta} + 2\dot{r}\dot{\theta} = 5(2) + 2(4)(1) = 18\ \text{m/s}^2$$

$$a_z = \ddot{z} = -4\ \text{m/s}^2$$

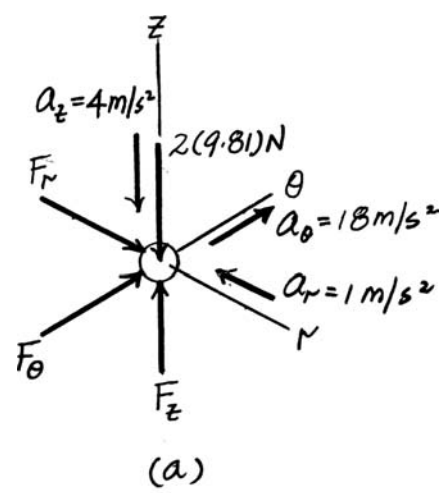

(a)

Equations of Motion: By referring to the free-body diagram of the particle in Fig. (a),

$\Sigma F_r = ma_r;$ $\quad F_r = 2(-1) = -2\ \text{N}$ **Ans.**

$\Sigma F_\theta = ma_\theta;$ $\quad F_\theta = 2(18) = 36\ \text{N}$ **Ans.**

$\Sigma Fz = ma_z;$ $\quad F_z - 2(9.81) = 2(-4);$ $\quad F_z = 11.6\ \text{N}$ **Ans.**

Note: The negative sign indicates that $\mathbf{F}_r$ acts in the opposite sense to that shown on the free-body diagram.

© 2010 Pearson Education, Inc., Upper Saddle River, NJ. All rights reserved. This material is protected under all copyright laws as they currently exist. No portion of this material may be reproduced, in any form or by any means, without permission in writing from the publisher.

***13–88.** If the coefficient of static friction between the block of mass m and the turntable is μ_s, determine the maximum constant angular velocity of the platform without causing the block to slip.

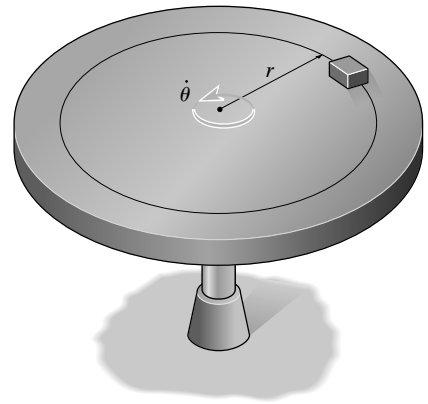

Free-Body Diagram: The free-body diagram of the block is shown in Fig. (a). Here, the frictional force developed is resolved into its radial and transversal components $\mathbf{F}_r$, $\mathbf{F}_\theta$, $\mathbf{a}_r$, and $\mathbf{a}_\theta$ are assumed to be directed towards their positive axes.

Equations of Motion: By referring to Fig. (a),

$$\Sigma F_r = ma_r; \qquad -F_r = ma_r \qquad \textbf{(1)}$$

$$\Sigma F_\theta = ma_\theta; \qquad F_\theta = ma_\theta \qquad \textbf{(2)}$$

$$\Sigma F_z = ma_z; \qquad N - mg = m(0) \qquad N = mg$$

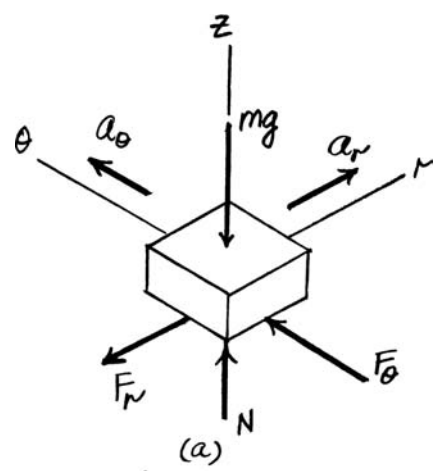

Kinematics: Since r and $\dot{\theta}$ are constant, $\dot{r} = \ddot{r} = 0$ and $\ddot{\theta} = 0$.

$$a_r = \ddot{r} - r\dot{\theta}^2 = 0 - r\dot{\theta}^2 = -r\dot{\theta}^2$$

$$a_\theta = r\ddot{\theta} + 2\dot{r}\dot{\theta} = 0$$

Substituting the results of $\mathbf{a}_r$ and $\mathbf{a}_\theta$ into Eqs. (1) and (2),

$$F_r = mr\,\dot{\theta}^2 \qquad\qquad F_\theta = 0$$

Thus, the magnitude of the frictional force is given by

$$F = \sqrt{F_r{}^2 + F_\theta{}^2} = \sqrt{(mr\dot{\theta})^2 + 0} = mr\dot{\theta}^2$$

Since the block is required to be on the verge of slipping,

$$F = \mu_s N$$

$$mr\dot{\theta}^2 = \mu_s mg$$

$$\dot{\theta} = \sqrt{\frac{\mu_s g}{r}} \qquad \textbf{Ans.}$$

© 2010 Pearson Education, Inc., Upper Saddle River, NJ. All rights reserved. This material is protected under all copyright laws as they currently exist. No portion of this material may be reproduced, in any form or by any means, without permission in writing from the publisher.

•13–89. The 0.5-kg collar C can slide freely along the smooth rod AB. At a given instant, rod AB is rotating with an angular velocity of $\dot{\theta} = 2$ rad/s and has an angular acceleration of $\ddot{\theta} = 2$ rad/s^2. Determine the normal force of rod AB and the radial reaction of the end plate B on the collar at this instant. Neglect the mass of the rod and the size of the collar.

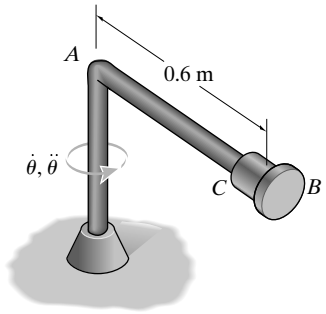

Free-Body Diagram: The free-body diagram of the collar is shown in Fig. (a). Here, $\mathbf{a}_r$ and $\mathbf{a}_\theta$ are assumed to be directed towards the positive of their respective axes.

Equations of Motion: By referring to Fig. (a),

$\Sigma F_r = ma_r;$ $\quad -N_B = 0.5a_r$ **(1)**

$\Sigma F_\theta = ma_\theta;$ $\quad F_{AB} = 0.5a_\theta$ **(2)**

Kinematics: Since $r = 0.6$ m is constant, $\dot{r} = \ddot{r} = 0$.

$$a_r = \ddot{r} - r\dot{\theta}^2 = 0 - (0.6)(2^2) = -2.4 \text{ m/s}^2$$

$$a_\theta = r\ddot{\theta} + 2\dot{r}\dot{\theta} = 0.6(2) + 0 = 1.2 \text{ m/s}^2$$

Substituting the results of $\mathbf{a}_r$ and $\mathbf{a}_\theta$ into Eqs. (1) and (2) yields

$N_B = 1.20$ N **Ans.**

$F_{AB} = 0.6$ N **Ans.**

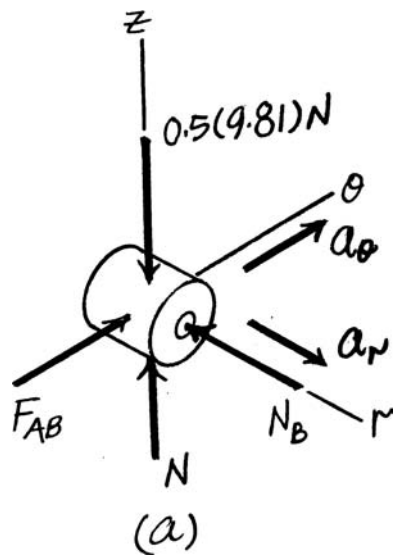

© 2010 Pearson Education, Inc., Upper Saddle River, NJ. All rights reserved. This material is protected under all copyright laws as they currently exist. No portion of this material may be reproduced, in any form or by any means, without permission in writing from the publisher.

13–90. The 2-kg rod AB moves up and down as its end slides on the smooth contoured surface of the cam, where $r = 0.1$ m and $z = (0.02 \sin \theta)$ m. If the cam is rotating with a constant angular velocity of 5 rad/s, determine the force on the roller A when $\theta = 90°$. Neglect friction at the bearing C and the mass of the roller.

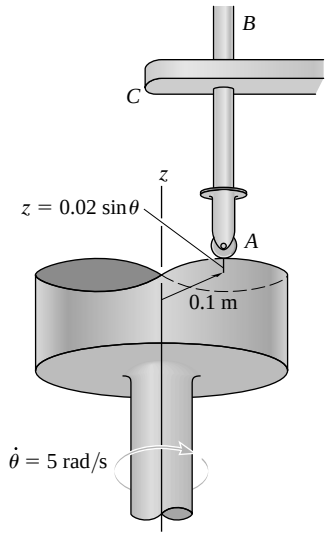

Kinematics: Taking the required time derivatives, we have

$$\dot{\theta} = 5 \text{ rad/s} \qquad \ddot{\theta} = 0$$

$$z = 0.02 \sin \theta \qquad \dot{z} = 0.02 \cos \theta \dot{\theta} \qquad \ddot{z} = 0.02\left(\cos \theta \ddot{\theta} - \sin \theta \dot{\theta}^2\right)$$

Thus,

$$a_z = \ddot{z} = 0.02\left[\cos \theta(0) - \sin \theta\left(5^2\right)\right] = -0.5 \sin \theta$$

At $\theta = 90°$, $\qquad a_z = -0.5 \sin 90° = -0.500 \text{ m/s}^2$

Equations of Motion:

$\Sigma F_z = ma_z;$ $\qquad F_z - 2(9.81) = 2(-0.500)$

$F_z = 18.6$ N **Ans.**

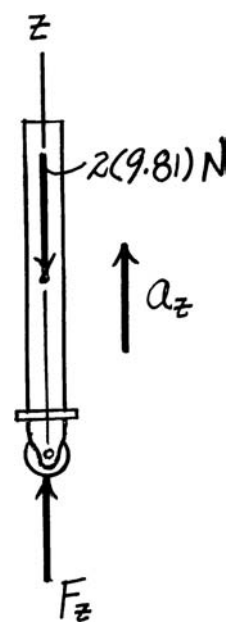

© 2010 Pearson Education, Inc., Upper Saddle River, NJ. All rights reserved. This material is protected under all copyright laws as they currently exist. No portion of this material may be reproduced, in any form or by any means, without permission in writing from the publisher.

13–91. The 2-kg rod AB moves up and down as its end slides on the smooth contoured surface of the cam, where $r = 0.1$ m and $z = (0.02 \sin \theta)$ m. If the cam is rotating at a constant angular velocity of 5 rad/s, determine the maximum and minimum force the cam exerts on the roller at A. Neglect friction at the bearing C and the mass of the roller.

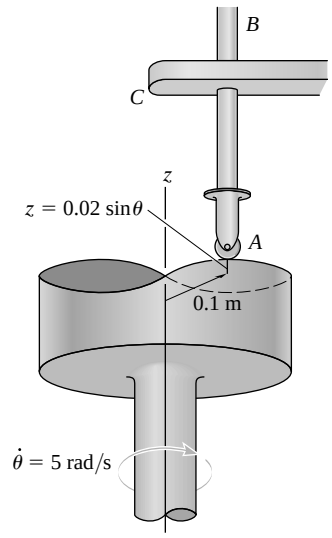

Kinematics: Taking the required time derivatives, we have

$$\dot{\theta} = 5 \text{ rad/s} \qquad \ddot{\theta} = 0$$

$$z = 0.02 \sin \theta \qquad \dot{z} = 0.02 \cos \theta \dot{\theta} \qquad \ddot{z} = 0.02\left(\cos \theta \ddot{\theta} - \sin \theta \dot{\theta}^2\right)$$

Thus,

$$a_z = \ddot{z} = 0.02\left[\cos \theta(0) - \sin \theta\left(5^2\right)\right] = -0.5 \sin \theta$$

At $\theta = 90°$, $\qquad a_z = -0.5 \sin 90° = -0.500 \text{ m/s}^2$

At $\theta = -90°$, $\qquad a_z = -0.5 \sin(-90°) = 0.500 \text{ m/s}^2$

Equations of Motion: At $\theta = 90°$, applying Eq. 13–9, we have

$$\Sigma F_z = ma_z; \qquad (F_z)_{\min} - 2(9.81) = 2(-0.500)$$

$$(F_z)_{\min} = 18.6 \text{ N} \qquad \textbf{Ans.}$$

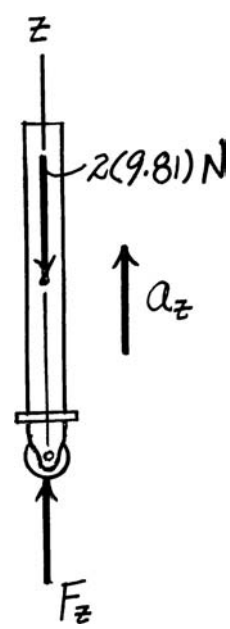

At $\theta = -90°$, we have

$$\Sigma F_z = ma_z; \qquad (F_z)_{\max} - 2(9.81) = 2(0.500)$$

$$(F_z)_{\max} = 20.6 \text{ N} \qquad \textbf{Ans.}$$

© 2010 Pearson Education, Inc., Upper Saddle River, NJ. All rights reserved. This material is protected under all copyright laws as they currently exist. No portion of this material may be reproduced, in any form or by any means, without permission in writing from the publisher.

***13–92.** If the coefficient of static friction between the conical surface and the block of mass m is $\mu_s = 0.2$, determine the minimum constant angular velocity $\dot{\theta}$ so that the block does not slide downwards.

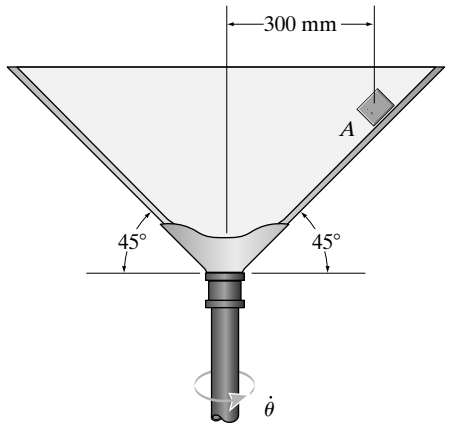

Free-Body Diagram: The free-body diagram of the block is shown in Fig. (a). Since the block is required to be on the verge of sliding down the conical surface, $F_f = \mu_k N = 0.2N$ must be directed up the conical surface. Here, $\mathbf{a}_r$ is assumed to be directed towards the positive r axis.

Equations of Motion: By referring to Fig. (a),

$$+\uparrow \Sigma F_z = ma_z; \quad N\cos 45° + 0.2N\sin 45° - m(9.81) = m(0) \qquad N = 11.56m$$

$$\xrightarrow{+} \Sigma F_r = ma_r; \quad 0.2(11.56m)\cos 45° - (11.56m)\sin 45° = ma_r \quad a_r = -6.54\ \text{m/s}^2$$

Kinematics: Since $r = 0.3$ m is constant, $\dot{r} = \ddot{r} = 0$.

$$a_r = \ddot{r} - r\dot{\theta}^2$$

$$-6.54 = 0 - 0.3\dot{\theta}^2$$

$$\dot{\theta} = 4.67\ \text{rad/s} \qquad \textbf{Ans.}$$

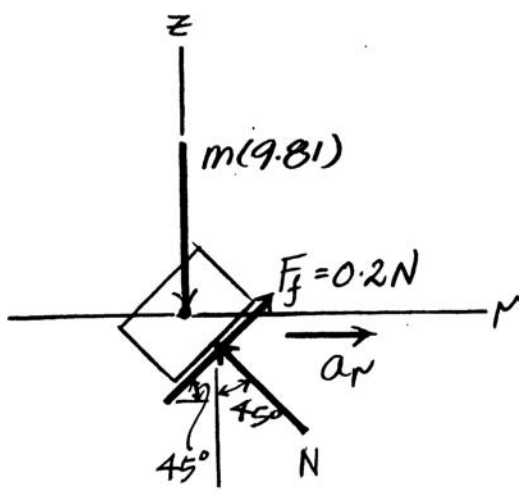

(a)

© 2010 Pearson Education, Inc., Upper Saddle River, NJ. All rights reserved. This material is protected under all copyright laws as they currently exist. No portion of this material may be reproduced, in any form or by any means, without permission in writing from the publisher.

•13–93. If the coefficient of static friction between the conical surface and the block is $\mu_s = 0.2$, determine the maximum constant angular velocity $\dot{\theta}$ without causing the block to slide upwards.

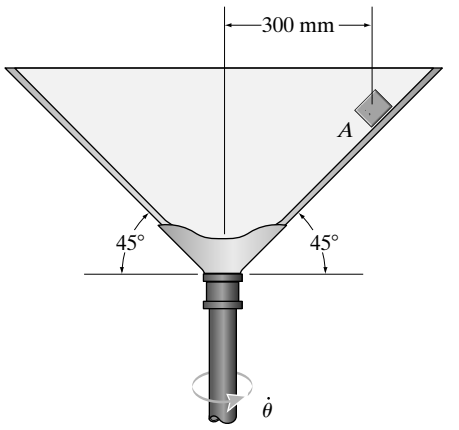

Free-Body Diagram: The free-body diagram of the block is shown in Fig. (a). Since the block is required to be on the verge of sliding up the conical surface, $F_f = \mu_k N = 0.2N$ must be directed down the conical surface. Here, $\mathbf{a}_r$ is assumed to be directed towards the positive r axis.

Equations of Motion: By referring to Fig. (a),

$+\uparrow \quad \Sigma F_z = ma_z; \quad N\cos 45° - 0.2N\sin 45° - m(9.81) = m(0) \qquad N = 17.34m$

$\overset{+}{\rightarrow} \quad \Sigma F_r = ma_r; \quad -17.34m\sin 45° - 0.2(17.34m)\cos 45° = ma_r \qquad a_r = -14.715\ \text{m/s}^2$

Kinematics: Since $r = 0.3$ m is constant, $\dot{r} = \ddot{r} = 0$.

$$a_r = \ddot{r} - r\dot{\theta}^2$$

$$-14.715 = 0 - 0.3\dot{\theta}^2$$

$$\dot{\theta} = 7.00\ \text{rad/s} \qquad \textbf{Ans.}$$

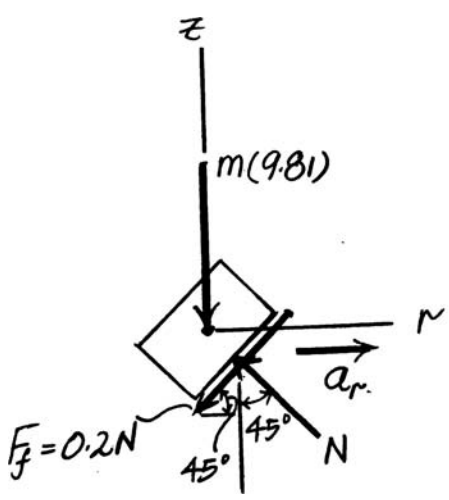

© 2010 Pearson Education, Inc., Upper Saddle River, NJ. All rights reserved. This material is protected under all copyright laws as they currently exist. No portion of this material may be reproduced, in any form or by any means, without permission in writing from the publisher.

13–94. If the position of the 3-kg collar C on the smooth rod AB is held at $r = 720$ mm, determine the constant angular velocity $\dot{\theta}$ at which the mechanism is rotating about the vertical axis. The spring has an unstretched length of 400 mm. Neglect the mass of the rod and the size of the collar.

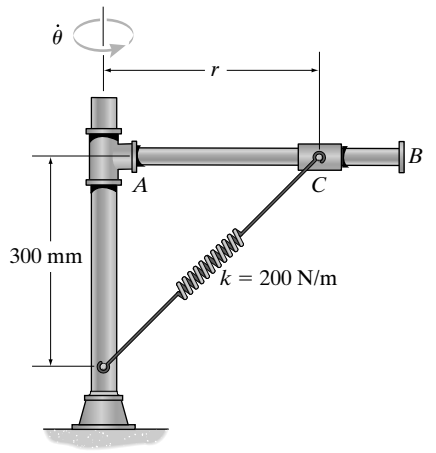

Free-Body Diagram: The free-body diagram of the collar is shown in Fig. (a). The force in the spring is given by $F_{sp} = ks = 200\left(\sqrt{0.72^2 + 0.3^2} - 0.4\right) = 76$ N. Here, $\mathbf{a}_r$ is assumed to be directed towards the positive r axis.

Equations of Motion: By referring to Fig. (a),

$$\xrightarrow{+} \Sigma F_r = ma_r; \qquad -76\left(\frac{12}{13}\right) = 3a_r \qquad a_r = -23.38 \text{ m/s}^2$$

Kinematics: Since $r = 0.72$ m is constant, $\dot{r} = \ddot{r} = 0$.

$$a_r = \ddot{r} - r\dot{\theta}^2$$

$$-23.38 = 0 - 0.72\dot{\theta}^2$$

$$\dot{\theta} = 5.70 \text{ rad/s} \qquad \textbf{Ans.}$$

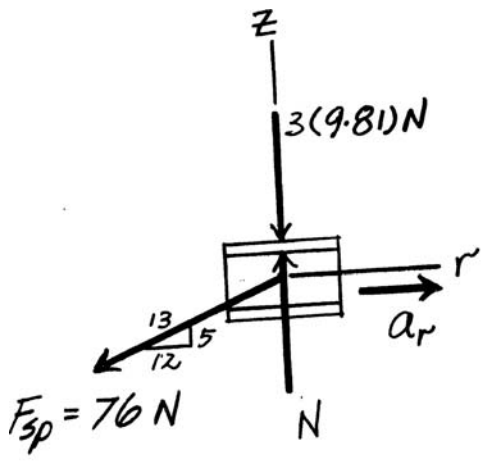

(a)

© 2010 Pearson Education, Inc., Upper Saddle River, NJ. All rights reserved. This material is protected under all copyright laws as they currently exist. No portion of this material may be reproduced, in any form or by any means, without permission in writing from the publisher.

13–95. The mechanism is rotating about the vertical axis with a constant angular velocity of $\dot{\theta} = 6\,\text{rad/s}$. If rod AB is smooth, determine the constant position r of the 3-kg collar C. The spring has an unstretched length of 400 mm. Neglect the mass of the rod and the size of the collar.

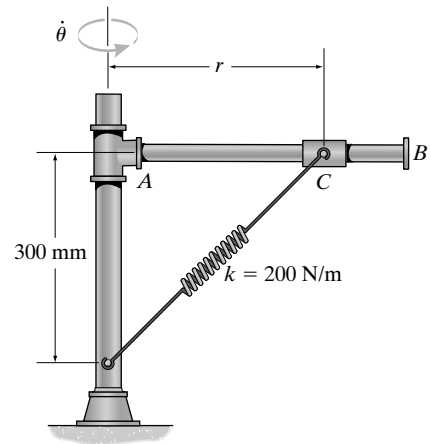

Free-Body Diagram: The free-body diagram of the collar is shown in Fig. (a). The force in the spring is given by $F_{sp} = ks = 200\left(\sqrt{r^2 + 0.3^2} - 0.4\right)$. Here, $\mathbf{a}_r$ is assumed to be directed towards the positive r axis.

Equations of Motion: By referring to Fig. (a),

$$\overset{+}{\rightarrow} \Sigma F_r = ma_r; \qquad -200\left(\sqrt{r^2 + 0.3^2} - 0.4\right)\cos\alpha = 3a_r \qquad \textbf{(1)}$$

However, from the geometry shown in Fig. (b),

$$\cos\alpha = \frac{r}{\sqrt{r^2 + 0.3^2}}$$

Thus, Eq. (1) can be rewritten as

$$-200\left(r - \frac{0.4r}{\sqrt{r^2 + 0.3^2}}\right) = 3a_r \qquad \textbf{(2)}$$

Kinematics: Since r is constant, $\dot{r} = \ddot{r} = 0$.

$$a_r = \ddot{r} - r\dot{\theta}^2 = -r(6^2) \qquad \textbf{(3)}$$

Substituting Eq. (3) into Eq. (2) and solving,

$$r = 0.8162\text{ m} = 816\text{ mm} \qquad \textbf{Ans.}$$

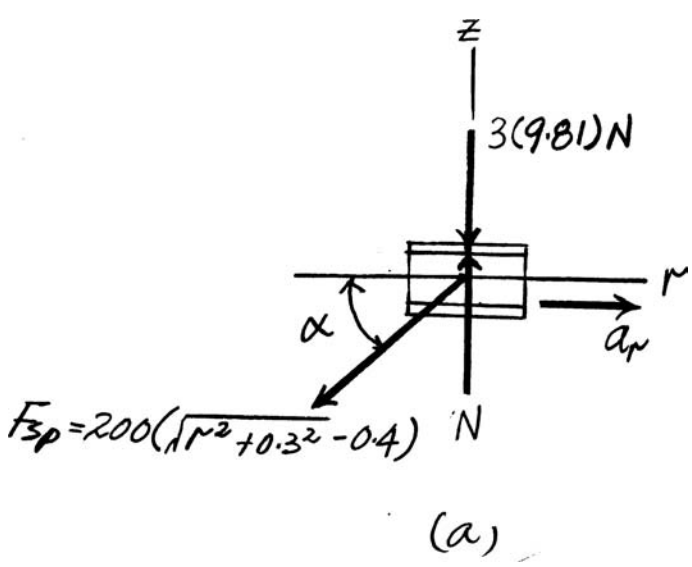

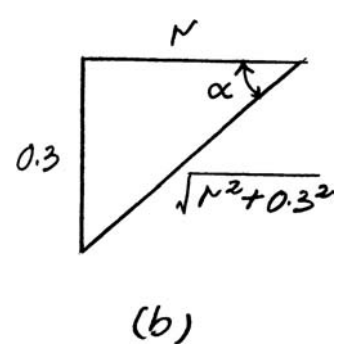

© 2010 Pearson Education, Inc., Upper Saddle River, NJ. All rights reserved. This material is protected under all copyright laws as they currently exist. No portion of this material may be reproduced, in any form or by any means, without permission in writing from the publisher.

***13–96.** Due to the constraint, the 0.5-kg cylinder C travels along the path described by $r = (0.6 \cos \theta)$ m. If arm OA rotates counterclockwise with an angular velocity of $\dot{\theta} = 2$ rad/s and an angular acceleration of $\ddot{\theta} = 0.8$ rad/s^2 at the instant $\theta = 30°$, determine the force exerted by the arm on the cylinder at this instant. The cylinder is in contact with only one edge of the smooth slot, and the motion occurs in the horizontal plane.

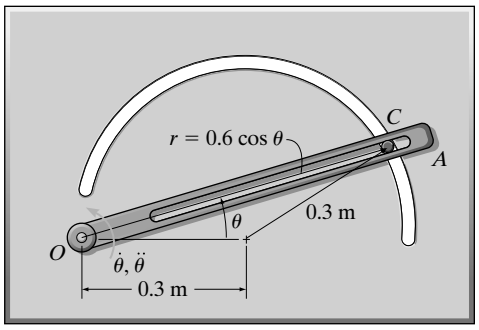

Kinematics: Since the motion of cylinder C is known, $\mathbf{a}_r$ and $\mathbf{a}_\theta$ will be determined first. The values of r and the time derivatives at the instant $\theta = 30°$ are evaluated below.

$$r = 0.6 \cos \theta|_{\theta=30°} = 0.6 \cos 30° = 0.5196 \text{ m}$$

$$\dot{r} = -0.6 \sin \theta\dot{\theta}\Big|_{\theta=30°} = -0.6 \sin 30°(2) = -0.6 \text{ m/s}$$

$$\ddot{r} = -0.6(\cos \theta\dot{\theta}^2 + \sin \theta\ddot{\theta})\Big|_{\theta=30°} = -0.6\Big[\cos 30°\left(2^2\right) + \sin 30°(0.8)\Big] = -2.318 \text{ m/s}^2$$

Using the above time derivatives, we obtain

$$a_r = \ddot{r} - r\dot{\theta}^2 = -2.318 - 0.5196\left(2^2\right) = -4.397 \text{ m/s}^2$$

$$a_\theta = r\ddot{\theta} + 2\dot{r}\dot{\theta} = 0.5196(0.8) + 2(-0.6)(2) = -1.984 \text{ m/s}^2$$

Free-Body Diagram: From the geometry shown in Fig. (a), we notice that $\alpha = 30°$. The free-body diagram of the cylinder C is shown in Fig. (b).

Equations of Motion: By referring to Fig. (b),

$+\nearrow \Sigma F_r = ma_r;$ $\quad -N \cos 30° = 0.5(-4.397)$ $\quad N = 2.539$ N

$+\nwarrow \Sigma F_\theta = ma_\theta;$ $\quad F_{OA} - 2.539 \sin 30° = 0.5(-1.984)$ $\quad F_{OA} = 0.277$ N **Ans.**

Kinematics: The values of r and the time derivatives at the instant $\theta = 30°$ are evaluated below.

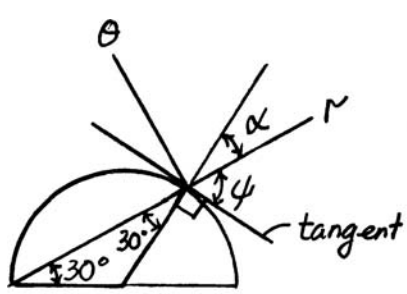

(a)

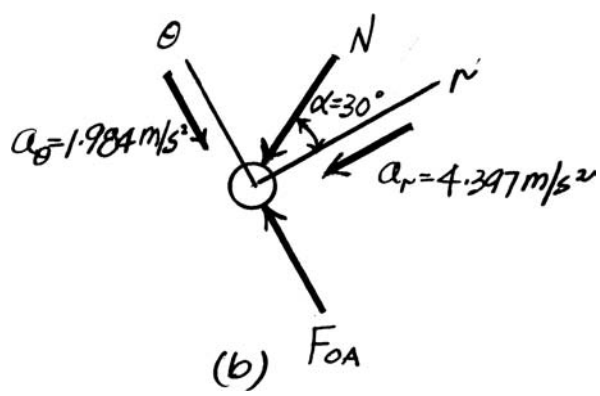

(b)

© 2010 Pearson Education, Inc., Upper Saddle River, NJ. All rights reserved. This material is protected under all copyright laws as they currently exist. No portion of this material may be reproduced, in any form or by any means, without permission in writing from the publisher.

•13–97. The 0.75-lb smooth can is guided along the circular path using the arm guide. If the arm has an angular velocity $\dot{\theta} = 2$ rad/s and an angular acceleration $\ddot{\theta} = 0.4$ rad/s^2 at the instant $\theta = 30°$, determine the force of the guide on the can. Motion occurs in the *horizontal plane.*

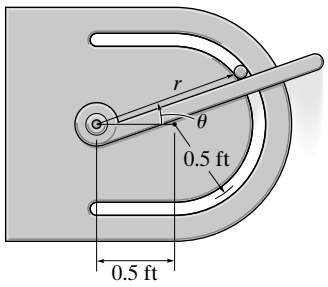

$$r = \cos\theta|_{\theta=30°} = 0.8660 \text{ ft}$$

$$\dot{r} = -\sin\theta\dot{\theta}\big|_{\theta=30°} = -1.00 \text{ ft/s}$$

$$\ddot{r} = -(\cos\theta\dot{\theta}^2 + \sin\theta\ddot{\theta})\big|_{\theta=30°} = -3.664 \text{ ft/s}^2$$

Using the above time derivative, we obtain

$$a_r = \ddot{r} - r\dot{\theta}^2 = -3.664 - 0.8660\left(2^2\right) = -7.128 \text{ ft/s}^2$$

$$a_\theta = r\ddot{\theta} + 2\dot{r}\dot{\theta} = 0.8660(4) + 2(-1)(2) = -0.5359 \text{ ft/s}^2$$

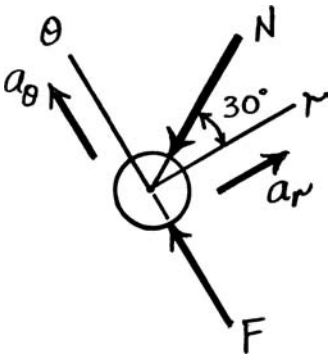

Equations of Motion: By referring to Fig. (a),

$$\Sigma F_r = ma_r; \qquad -N\cos 30° = \frac{0.75}{32.2}(-7.128) \qquad N = 0.1917 \text{ lb}$$

$$\Sigma F_\theta = ma_\theta; \qquad F - 0.1917\sin 30° = \frac{0.75}{32.2}(-0.5359) \qquad F = 0.0835 \text{ lb} \qquad \textbf{Ans.}$$

13–98. Solve Prob. 13–97 if motion occurs in the *vertical plane*.

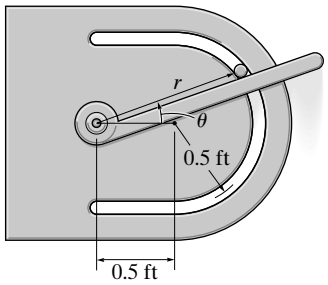

Kinematics: The values of r and the time derivatives at the instant $\theta = 30°$ are evaluated below.

$$r = \cos\theta\big|_{\theta=30°} = 0.8660 \text{ ft}$$

$$\dot{r} = -\sin\theta\dot{\theta}\big|_{\theta=30°} = -1.00 \text{ ft/s}$$

$$\ddot{r} = -(\cos\theta\dot{\theta}^2 + \sin\theta\ddot{\theta})\big|_{\theta=30°} = -3.664 \text{ ft/s}^2$$

Using the above time derivative, we obtain

$$a_r = \ddot{r} - r\dot{\theta}^2 = -3.664 - 0.8660\left(2^2\right) = -7.128 \text{ ft/s}^2$$

$$a_\theta = r\ddot{\theta} + 2\dot{r}\dot{\theta} = 0.8660(4) + 2(-1)(2) = -0.5359 \text{ ft/s}^2$$

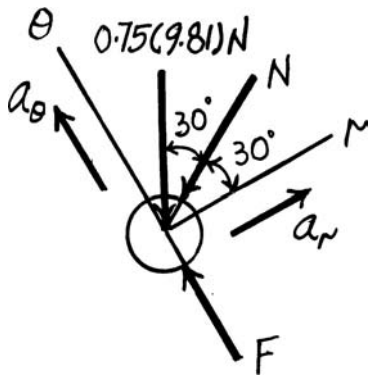

Equations of Motion: By referring to Fig. (a),

$$\Sigma F_r = ma_r; \qquad -N\cos 30° - 0.75\cos 60° = \frac{0.75}{32.2}(-7.128)$$

$$N = -0.2413 \text{ lb}$$

$$\Sigma F_\theta = ma_\theta; \qquad F + 0.2413\sin 30° - 0.75\sin 60° = \frac{0.75}{32.2}(-0.5359)$$

$$F = 0.516 \text{ lb} \qquad \textbf{Ans.}$$

© 2010 Pearson Education, Inc., Upper Saddle River, NJ. All rights reserved. This material is protected under all copyright laws as they currently exist. No portion of this material may be reproduced, in any form or by any means, without permission in writing from the publisher.

13–99. The forked rod is used to move the smooth 2-lb particle around the horizontal path in the shape of a limaçon, $r = (2 + \cos\theta)$ ft. If at all times $\dot{\theta} = 0.5$ rad/s, determine the force which the rod exerts on the particle at the instant $\theta = 90°$. The fork and path contact the particle on only one side.

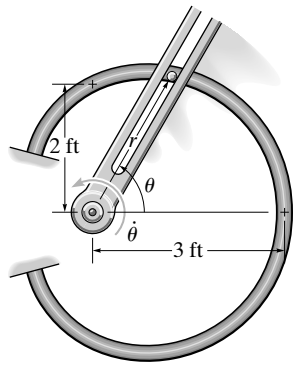

$r = 2 + \cos\theta$

$\dot{r} = -\sin\theta\dot{\theta}$

$\ddot{r} = -\cos\theta\dot{\theta}^2 - \sin\theta\ddot{\theta}$

At $\theta = 90°, \dot{\theta} = 0.5$ rad/s, and $\ddot{\theta} = 0$

$r = 2 + \cos 90° = 2$ ft

$\dot{r} = -\sin 90°(0.5) = -0.5$ ft/s

$\ddot{r} = -\cos 90°(0.5)^2 - \sin 90°(0) = 0$

$a_r = \ddot{r} - r\dot{\theta}^2 = 0 - 2(0.5)^2 = -0.5$ ft/s^2

$a_\theta = r\ddot{\theta} + 2\dot{r}\dot{\theta} = 2(0) + 2(-0.5)(0.5) = -0.5$ ft/s^2

$$\tan\psi = \frac{r}{dr/d\theta} = \left.\frac{2 + \cos\theta}{-\sin\theta}\right|_{\theta=90°} = -2 \qquad \psi = -63.43°$$

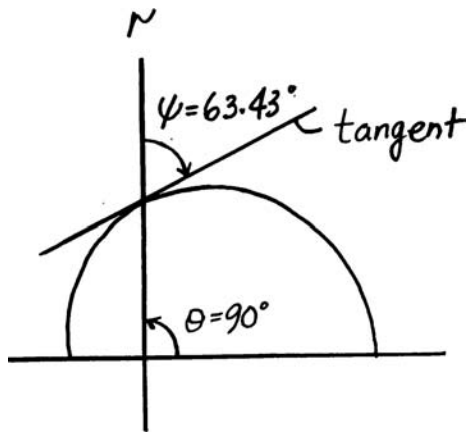

$$+\uparrow \Sigma F_r = ma_r; \qquad -N\cos 26.57° = \frac{2}{32.2}(-0.5) \qquad N = 0.03472 \text{ lb}$$

$$\overset{+}{\leftarrow} \Sigma F_\theta = ma_\theta; \qquad F - 0.03472 \sin 26.57° = \frac{2}{32.2}(-0.5)$$

$$F = -0.0155 \text{ lb} \qquad \textbf{Ans.}$$

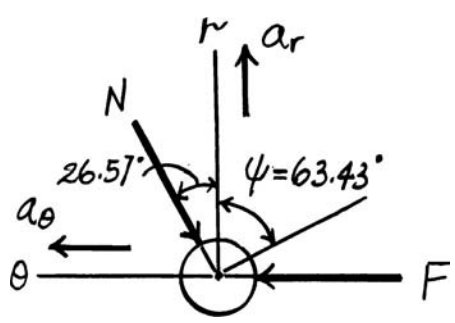

© 2010 Pearson Education, Inc., Upper Saddle River, NJ. All rights reserved. This material is protected under all copyright laws as they currently exist. No portion of this material may be reproduced, in any form or by any means, without permission in writing from the publisher.

***13–100.** Solve Prob. 13–99 at the instant $\theta = 60°$.

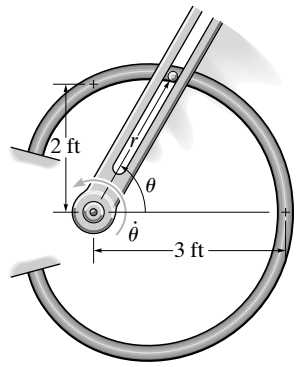

$r = 2 + \cos\theta$

$\dot{r} = -\sin\theta\dot{\theta}$

$\ddot{r} = -\cos\theta\dot{\theta}^2 - \sin\theta\ddot{\theta}$

At $\theta = 60°, \dot{\theta} = 0.5$ rad/s, and $\ddot{\theta} = 0$

$r = 2 + \cos 60° = 2.5$ ft

$\dot{r} = -\sin 60°(0.5) = -0.4330$ ft/s

$\ddot{r} = -\cos 60°(0.5)^2 - \sin 60°(0) = -0.125$ ft/s^2

$a_r = \ddot{r} - r\dot{\theta}^2 = -0.125 - 2.5(0.5)^2 = -0.75$ ft/s^2

$a_\theta = r\ddot{\theta} + 2\dot{r}\dot{\theta} = 2.5(0) + 2(-0.4330)(0.5) = -0.4330$ ft/s^2

$$\tan\psi = \frac{r}{dr/d\theta} = \left.\frac{2 + \cos\theta}{-\sin\theta}\right|_{\theta=60°} = -2.887 \qquad \psi = -70.89°$$

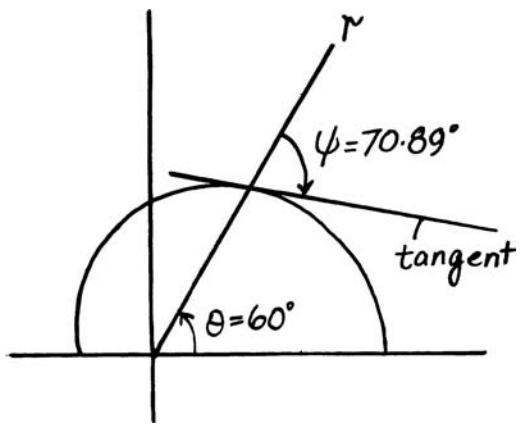

$$+\nearrow \Sigma F_r = ma_r; \qquad -N\cos 19.11° = \frac{2}{32.2}(-0.75) \qquad N = 0.04930 \text{ lb}$$

$$+\nwarrow \Sigma F_\theta = ma_\theta; \qquad F - 0.04930\sin 19.11° = \frac{2}{32.2}(-0.4330)$$

$$F = -0.0108 \text{ lb} \qquad \textbf{Ans.}$$

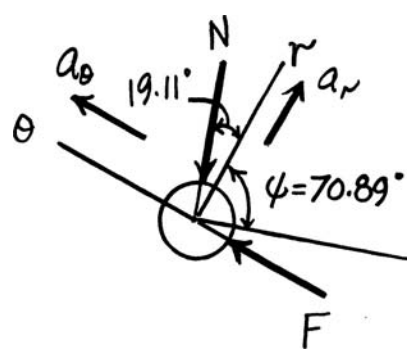

© 2010 Pearson Education, Inc., Upper Saddle River, NJ. All rights reserved. This material is protected under all copyright laws as they currently exist. No portion of this material may be reproduced, in any form or by any means, without permission in writing from the publisher.

•13–101. The forked rod is used to move the smooth 2-lb particle around the horizontal path in the shape of a limaçon, $r = (2 + \cos\theta)$ ft. If $\theta = (0.5t^2)$ rad, where t is in seconds, determine the force which the rod exerts on the particle at the instant $t = 1$ s. The fork and path contact the particle on only one side.

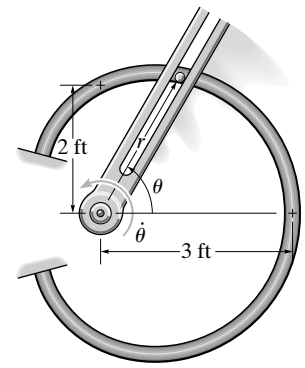

$r = 2 + \cos\theta \qquad \theta = 0.5t^2$

$\dot{r} = -\sin\theta\dot{\theta} \qquad \dot{\theta} = t$

$\ddot{r} = -\cos\theta\dot{\theta}^2 - \sin\theta\ddot{\theta} \qquad \ddot{\theta} = 1 \text{ rad/s}^2$

At $t = 1$ s, $\theta = 0.5$ rad, $\dot{\theta} = 1$ rad/s, and $\ddot{\theta} = 1$ rad/s^2

$r = 2 + \cos 0.5 = 2.8776$ ft

$\dot{r} = -\sin 0.5(1) = -0.4974$ ft/s^2

$\ddot{r} = -\cos 0.5(1)^2 - \sin 0.5(1) = -1.357$ ft/s^2

$a_r = \ddot{r} - r\dot{\theta}^2 = -1.375 - 2.8776(1)^2 = -4.2346$ ft/s^2

$a_\theta = r\ddot{\theta} + 2\dot{r}\dot{\theta} = 2.8776(1) + 2(-0.4794)(1) = 1.9187$ ft/s^2

$$\tan\psi = \frac{r}{dr/d\theta} = \left.\frac{2 + \cos\theta}{-\sin\theta}\right|_{\theta=0.5\text{ rad}} = -6.002 \qquad \psi = -80.54°$$

$$+\nearrow \Sigma F_r = ma_r; \qquad -N\cos 9.46° = \frac{2}{32.2}(-4.2346) \qquad N = 0.2666 \text{ lb}$$

$$+\nwarrow \Sigma F_\theta = ma_\theta; \qquad F - 0.2666\sin 9.46° = \frac{2}{32.2}(1.9187)$$

$$F = 0.163 \text{ lb} \qquad \textbf{Ans.}$$

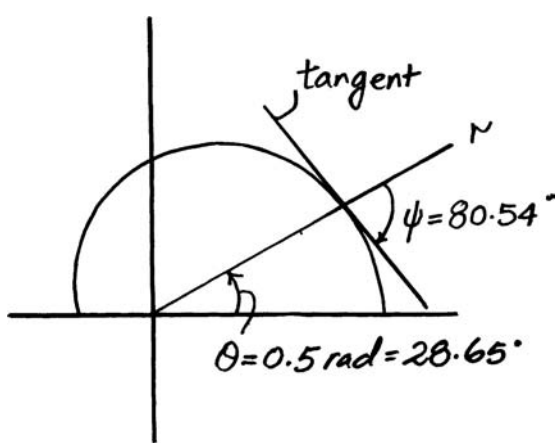

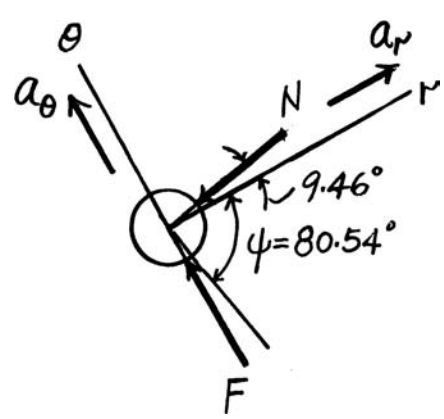

© 2010 Pearson Education, Inc., Upper Saddle River, NJ. All rights reserved. This material is protected under all copyright laws as they currently exist. No portion of this material may be reproduced, in any form or by any means, without permission in writing from the publisher.

13–102. The amusement park ride rotates with a constant angular velocity of $\dot{\theta} = 0.8\,\text{rad/s}$. If the path of the ride is defined by $r = (3\sin\theta + 5)\,\text{m}$ and $z = (3\cos\theta)\,\text{m}$, determine the r, θ, and z components of force exerted by the seat on the 20-kg boy when $\theta = 120°$.

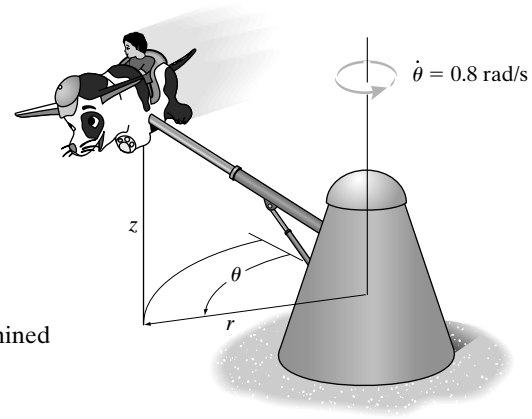

Kinematics: Since the motion of the boy is known, $\mathbf{a}_r$, $\mathbf{a}_\theta$, and $\mathbf{a}_z$ will be determined first. The value of r and its time derivatives at the instant $\theta = 120°$ are

$$r = (3\sin\theta + 5)\big|_{\theta=120°} = 3\sin 120° + 5 = 7.598\text{ m}$$

$$\dot{r} = 3\cos\theta\dot{\theta}\big|_{\theta=120°} = 3\cos 120°(0.8) = -1.2\text{ m/s}$$

$$\ddot{r} = 3(\cos\theta\ddot{\theta} - \sin\theta\dot{\theta}^2)\big|_{\theta=120°}$$

$$= 3\left[\cos 120°(0) - \sin 120°(0.8^2)\right] = -1.663\text{ m/s}^2$$

Using the above time derivatives, we obtain

$$a_r = \ddot{r} - r\dot{\theta}^2 = -1.663 - 7.598(0.8^2) = -6.526\text{ m/s}^2$$

$$a_\theta = r\ddot{\theta} + 2\dot{r}\dot{\theta} = 7.598(0) + 2(-1.2)(0.8) = -1.92\text{ m/s}^2$$

Also,

$$z = 3\cos\theta\,\text{m} \qquad \dot{z} = -3\sin\theta\dot{\theta}\text{ m/s}$$

$$a_z = \ddot{z} = -3(\sin\theta\ddot{\theta} + \cos\theta\dot{\theta}^2)\Big|_{\theta=120°} = -3\left[\sin 120°(0) + \cos 120°(0.8^2)\right]$$

$$= 0.96\text{ m/s}^2$$

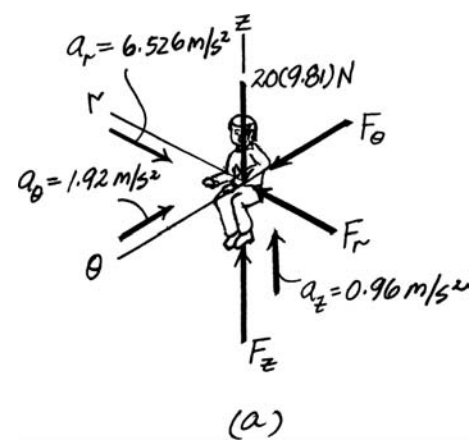

Equations of Motion: By referring to the free-body diagram of the boy shown in Fig. (a),

$\Sigma F_r = ma_r$; $\quad F_r = 20(-6.526) = -131\text{ N}$ **Ans.**

$\Sigma F_\theta = ma_\theta$; $\quad F_\theta = 20(-1.92) = -38.4\text{ N}$ **Ans.**

$\Sigma F_z = ma_z$; $\quad F_z - 20(9.81) = 20(0.96) \qquad F_z = 215\text{ N}$ **Ans.**

Note: The negative signs indicate that $\mathbf{F}_r$ and $\mathbf{F}_\theta$ act in the opposite sense to those shown on the free-body diagram.

© 2010 Pearson Education, Inc., Upper Saddle River, NJ. All rights reserved. This material is protected under all copyright laws as they currently exist. No portion of this material may be reproduced, in any form or by any means, without permission in writing from the publisher.

13–103. The airplane executes the vertical loop defined by $r^2 = [810(10^3)\cos 2\theta]\,\text{m}^2$. If the pilot maintains a constant speed $v = 120\,\text{m/s}$ along the path, determine the normal force the seat exerts on him at the instant $\theta = 0°$. The pilot has a mass of 75 kg.

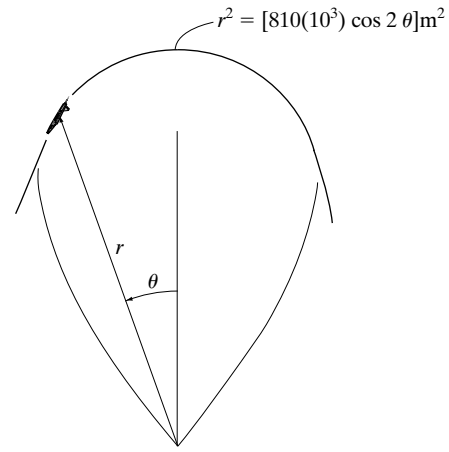

Kinematics: Since the motion of the airplane is known, $\mathbf{a}_r$ and $\mathbf{a}_\theta$ will be determined first. The value of r and θ at $\theta = 0°$ are

$$r^2 = 810(10^3)\cos 2\theta\big|_{\theta=0°} = 810(10^3)\cos 0°$$

$$r = 900\text{ m}$$

and

$$2r\dot{r} = -810(10^3)\sin 2\theta(2\dot{\theta})$$

$$\dot{r} = \frac{-810(10^3)\sin 2\theta\dot{\theta}}{r}\bigg|_{\theta=0°} = \frac{-810(10^3)\sin 0°\theta}{900} = 0$$

and

$$r\ddot{r} + \dot{r}^2 = -810(10^3)\left[\sin 2\theta\ddot{\theta} + 2\cos 2\theta\dot{\theta}^2\right]$$

$$\ddot{r} = \frac{-810(10^3)\left[\sin 2\theta\ddot{\theta} + 2\cos 2\theta\dot{\theta}^2\right] - \dot{r}^2}{r}\bigg|_{\theta=0°}$$

$$= \frac{-810(10^3)\left[\sin 0°\ddot{\theta} + 2\cos 0°\dot{\theta}^2\right] - 0}{900}$$

$$= -1800\dot{\theta}^2$$

The radial and transversal components of the airplane's velocity are given by

$$v_r = \dot{r} = 0 \qquad v_\theta = r\dot{\theta} = 900\dot{\theta}$$

Thus,

$$v = v_\theta$$

$$120 = 900\dot{\theta}$$

$$\dot{\theta} = 0.1333\text{ rad/s}^2$$

Substituting the result of $\dot{\theta}$ into $\ddot{r}$, we obtain

$$\ddot{r} = -1800(0.1333^2) = -32\text{ m/s}^2$$

Since $v = v_\theta$ and v are always directed along the tangent, then the tangent of the path at $\theta = 0°$ coincide with the θ axis, Fig. (a). As a result $a_\theta = a_t = 0$, Fig. (b), because v is constant. Using the results of $\ddot{r}$ and $\dot{\theta}$, we have

$$a_r = \ddot{r} - r\dot{\theta}^2 = -32 - 900(1.1333^2) = -48\text{ m/s}^2$$

Equations of Motion: By referring to the free-body diagram of the pilot shown in Fig. (c),

$$+\uparrow \Sigma F_r = ma_r; \qquad -N - 75(9.81) = 75(-48)$$

$$N = 2864.25\text{ N} = 2.86\text{ kN} \qquad \textbf{Ans.}$$

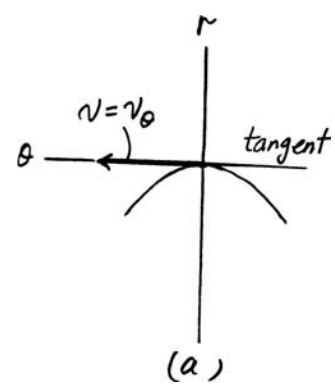

(a)

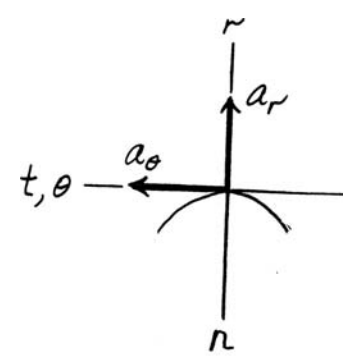

(b)

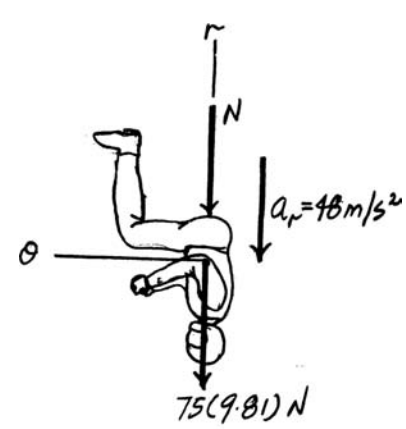

(c)

© 2010 Pearson Education, Inc., Upper Saddle River, NJ. All rights reserved. This material is protected under all copyright laws as they currently exist. No portion of this material may be reproduced, in any form or by any means, without permission in writing from the publisher.

***13–104.** A boy standing firmly spins the girl sitting on a circular "dish" or sled in a circular path of radius $r_0 = 3$ m such that her angular velocity is $\dot{\theta}_0 = 0.1$ rad/s. If the attached cable OC is drawn inward such that the radial coordinate r changes with a constant speed of $\dot{r} = -0.5$ m/s, determine the tension it exerts on the sled at the instant $r = 2$ m. The sled and girl have a total mass of 50 kg. Neglect the size of the girl and sled and the effects of friction between the sled and ice. *Hint:* First show that the equation of motion in the θ direction yields $a_\theta = r\ddot{\theta} + 2\dot{r}\dot{\theta} = (1/r)\, d/dt(r^2\dot{\theta}) = 0$. When integrated, $r^2\dot{\theta} = C$, where the constant C is determined from the problem data.

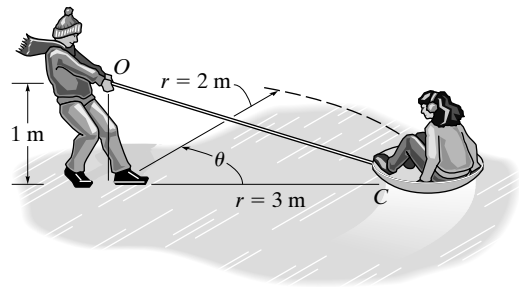

Equations of Motion: Applying Eq.13–9, we have

$$\Sigma F_\theta = ma_\theta; \qquad 0 = 50\left(r\ddot{\theta} + 2\dot{r}\dot{\theta}\right)$$

$$\left(r\ddot{\theta} + 2\dot{r}\dot{\theta}\right) = \frac{1}{r}\frac{d\left(r^2\dot{\theta}\right)}{dt} = 0 \qquad \textbf{Q.E.D.}$$

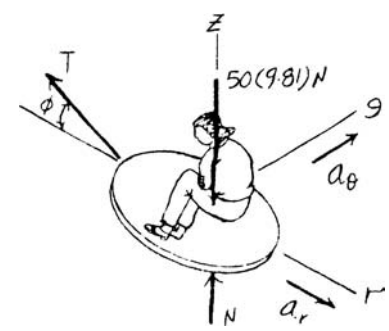

Thus, $\int \frac{d\left(r^2\dot{\theta}\right)}{dt} = C$. Then, $r^2\,\dot{\theta} = C$. At $r = r_0 = 3$ m, $\dot{\theta} = \dot{\theta}_0 = 0.1$ rad/s.

Hence, $r = 2$ m,

$$\left(2^2\right)\dot{\theta} = \left(3^2\right)(0.1) \qquad \dot{\theta} = 0.225 \text{ rad/s}$$

Here, $\dot{r} = -0.5$ m/s and $\ddot{r} = 0$. Applying Eqs. 12–29, we have

$$a_r = \ddot{r} - r\dot{\theta}^2 = 0 - 2\left(0.225^2\right) = -0.10125 \text{ m/s}^2$$

At $r = 2$ m, $\phi = \tan^{-1}\left(\frac{1}{2}\right) = 26.57°$. Then

$$\Sigma F_r = ma_r; \qquad -T\cos 26.57° = 50(-0.10125)$$

$$T = 5.66 \text{ N} \qquad \textbf{Ans.}$$

© 2010 Pearson Education, Inc., Upper Saddle River, NJ. All rights reserved. This material is protected under all copyright laws as they currently exist. No portion of this material may be reproduced, in any form or by any means, without permission in writing from the publisher.

13–105. The smooth particle has a mass of 80 g. It is attached to an elastic cord extending from O to P and due to the slotted arm guide moves along the *horizontal* circular path $r = (0.8 \sin \theta)$ m. If the cord has a stiffness $k = 30$ N/m and an unstretched length of 0.25 m, determine the force of the guide on the particle when $\theta = 60°$. The guide has a constant angular velocity $\dot{\theta} = 5$ rad/s.

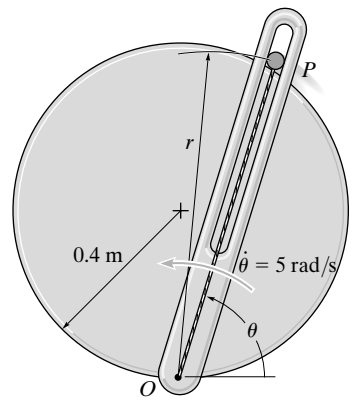

$r = 0.8 \sin \theta$

$\dot{r} = 0.8 \cos \theta \, \dot{\theta}$

$\ddot{r} = -0.8 \sin \theta \, (\dot{\theta})^2 + 0.8 \cos \theta \ddot{\theta}$

$\dot{\theta} = 5, \qquad \ddot{\theta} = 0$

At $\theta = 60°$, $\quad r = 0.6928$

$\dot{r} = 2$

$\ddot{r} = -17.321$

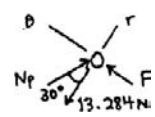

$a_r = \ddot{r} - r(\dot{\theta})^2 = -17.321 - 0.6928(5)^2 = -34.641$

$a_\theta = r\ddot{\theta} + 2\dot{r}\dot{\theta} = 0 + 2(2)(5) = 20$

$F_s = ks; \qquad F_s = 30(0.6928 - 0.25) = 13.284$ N

$\nearrow + \Sigma F_r = m a_r; \qquad -13.284 + N_P \cos 30° = 0.08(-34.641)$

$\nwarrow + \Sigma F_\theta = m a_\theta; \qquad F - N_P \sin 30° = 0.08(20)$

$F = 7.67$ N **Ans.**

$N_P = 12.1$ N

© 2010 Pearson Education, Inc., Upper Saddle River, NJ. All rights reserved. This material is protected under all copyright laws as they currently exist. No portion of this material may be reproduced, in any form or by any means, without permission in writing from the publisher.

13–106. Solve Prob. 13–105 if $\ddot{\theta} = 2$ rad/s^2 when $\dot{\theta} = 5$ rad/s and $\theta = 60°$.

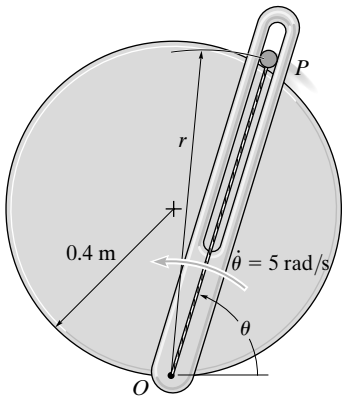

$r = 0.8 \sin\theta$

$\dot{r} = 0.8 \cos\theta\,\dot{\theta}$

$\ddot{r} = -0.8 \sin\theta\,(\dot{\theta})^2 + 0.8 \cos\theta\ddot{\theta}$

$\dot{\theta} = 5, \qquad \ddot{\theta} = 2$

At $\theta = 60°$, $\quad r = 0.6928$

$\dot{r} = 2$

$\ddot{r} = -16.521$

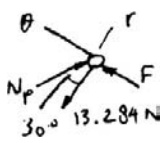

$a_r = \ddot{r} - r(\dot{\theta})^2 = -16.521 - 0.6928(5)^2 = -33.841$

$a_\theta = r\ddot{\theta} + 2\dot{r}\dot{\theta} = 0.6925(2) + 2(2)(5) = 21.386$

$F_s = ks; \qquad F_s = 30(0.6928 - 0.25) = 13.284$ N

$\nearrow + \Sigma F_r = m\,a_r; \qquad -13.284 + N_P \cos 30° = 0.08(-33.841)$

$+\nwarrow \Sigma F_\theta = ma_\theta; \qquad F - N_P \sin 30° = 0.08(21.386)$

$F = 7.82$ N **Ans.**

$N_P = 12.2$ N

© 2010 Pearson Education, Inc., Upper Saddle River, NJ. All rights reserved. This material is protected under all copyright laws as they currently exist. No portion of this material may be reproduced, in any form or by any means, without permission in writing from the publisher.

13–107. The 1.5-kg cylinder C travels along the path described by $r = (0.6 \sin \theta)$ m. If arm OA rotates counterclockwise with a constant angular velocity of $\dot{\theta} = 3$ rad/s, determine the force exerted by the smooth slot in arm OA on the cylinder at the instant $\theta = 60°$. The spring has a stiffness of 100 N/m and is unstretched when $\theta = 30°$. The cylinder is in contact with only one edge of the slotted arm. Neglect the size of the cylinder. Motion occurs in the horizontal plane.

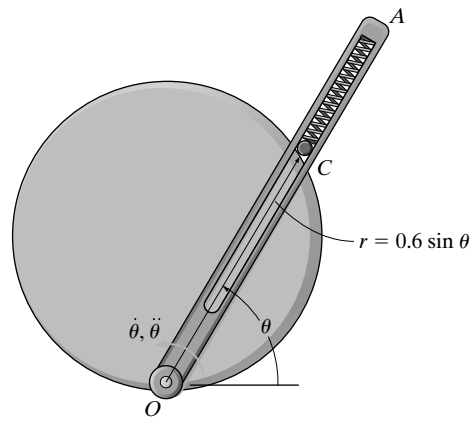

Kinematics: Since the motion of cylinder C is known, $\mathbf{a}_r$ and $\mathbf{a}_\theta$ will be determined first. The values of r and its time derivatives at the instant $\theta = 60°$ are evaluated below.

$$r = 0.6 \sin \theta|_{\theta=60°} = 0.6 \sin 60° = 0.5196 \text{ m}$$

$$\dot{r} = 0.6 \cos \theta \dot{\theta}\big|_{\theta=60°} = 0.6 \cos 60°(3) = 0.9 \text{ m/s}$$

$$\ddot{r} = 0.6(\cos \theta \ddot{\theta} - \sin \theta(\dot{\theta})^2)\Big|_{\theta=60°} = 0.6\left[\cos 60°(0) - \sin 60°(3^2)\right] = -4.677 \text{ m/s}^2$$

Using the above time derivatives,

$$a_r = \ddot{r} - r\dot{\theta}^2 = -4.677 - 0.5196(3^2) = -9.353 \text{ m/s}^2$$

$$a_\theta = r\ddot{\theta} + 2\dot{r}\dot{\theta} = 0.5196(0) + 2(0.9)(3) = 5.4 \text{ m/s}^2$$

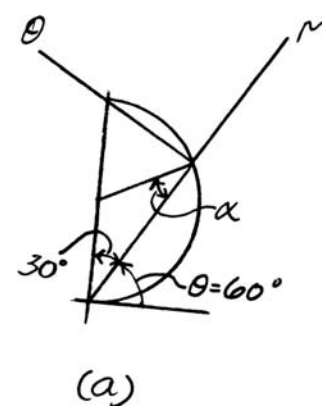

Free-Body Diagram: From the geometry shown in Fig. (a), we notice that $\alpha = 30°$. The force developed in the spring is given by $F_{sp} = ks = 100(0.6 \sin 60° - 0.6 \sin 30°) = 21.96$ N. The free-body diagram of the cylinder C is shown in Fig. (b).

Equations of Motion: By referring to Fig. (a),

$+\nearrow \Sigma F_r = ma_r;$ $\quad N \cos 30° - 21.96 = 1.5(-9.353)$

$N = 9.159$ N

$\nwarrow + \Sigma F_\theta = ma_\theta;$ $\quad F_{OA} - 9.159 \sin 30° = 1.5(5.4)$

$F_{OA} = 12.68 \text{ N} = 12.7 \text{ N}$ **Ans.**

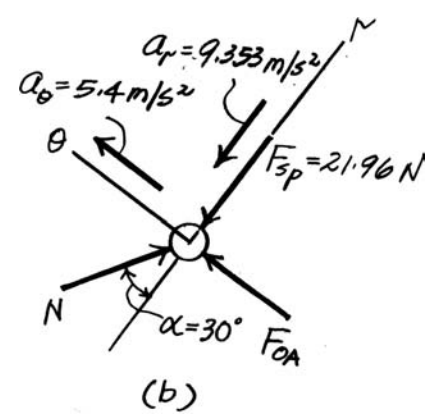

© 2010 Pearson Education, Inc., Upper Saddle River, NJ. All rights reserved. This material is protected under all copyright laws as they currently exist. No portion of this material may be reproduced, in any form or by any means, without permission in writing from the publisher.

***13–108.** The 1.5-kg cylinder C travels along the path described by $r = (0.6 \sin \theta)$ m. If arm OA is rotating counterclockwise with an angular velocity of $\dot{\theta} = 3$ rad/s, determine the force exerted by the smooth slot in arm OA on the cylinder at the instant $\theta = 60°$. The spring has a stiffness of 100 N/m and is unstretched when $\theta = 30°$. The cylinder is in contact with only one edge of the slotted arm. Neglect the size of the cylinder. Motion occurs in the vertical plane.

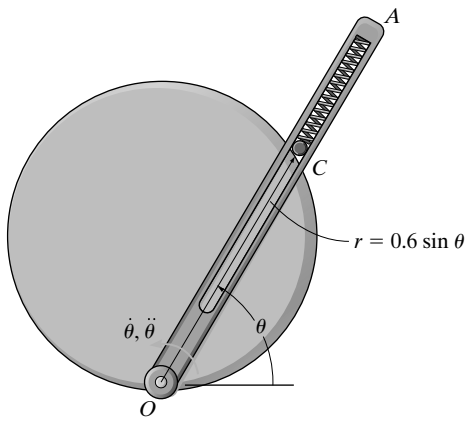

Kinematics: Since the motion of cylinder C is known, $\mathbf{a}_r$ and $\mathbf{a}_\theta$ will be determined first. The values of r and its time derivatives at the instant $0 = 60°$ are evaluated below.

$$r = 0.6 \sin \theta|_{\theta=60°} = 0.6 \sin 60° = 0.5196 \text{ m}$$

$$\dot{r} = 0.6 \cos \theta\dot{\theta}|_{\theta=60°} = 0.6 \cos 60°(3) = 0.9 \text{ m/s}$$

$$\ddot{r} = 0.6(\cos \theta\ddot{\theta} - \sin \theta(\dot{\theta})^2)\Big|_{\theta=60°} = 0.6\left[\cos 60°(0) - \sin 60°(3^2)\right] = -4.677 \text{ m/s}^2$$

Using the above time derivatives,

$$a_r = \ddot{r} - r\dot{\theta}^2 = -4.677 - 0.5196(3^2) = -9.353 \text{ m/s}^2$$

$$a_\theta = r\ddot{\theta} + 2\dot{r}\dot{\theta} = 0.5196(0) + 2(0.9)(3) = 5.4 \text{ m/s}^2$$

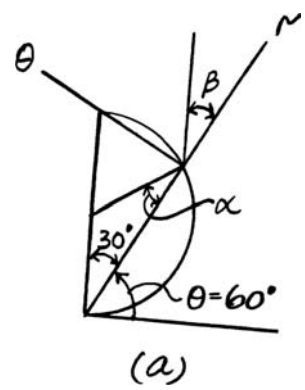

Free-Body Diagram: From the geometry shown in Fig. (a), we notice that $\alpha = 30°$ and $\beta = 30°$. The force developed in the spring is given by $F_{sp} = ks = 100(0.6 \sin 60° - 0.6 \sin 30°) = 21.96$ N. The free-body diagram of the cylinder C is shown in Fig. (b).

Equations of Motion: By referring to Fig. (a),

$+\nearrow \Sigma F_r = ma_r;$ $\quad N \cos 30° - 21.96 - 1.5(9.81) \cos 30° = 1.5(-9.353)$

$N = 23.87$ N

$\nwarrow + \Sigma F_\theta = ma_\theta;$ $\quad F_{OA} - 1.5(9.81) \sin 30° - 23.87 \sin 30° = 1.5(5.4)$

$F_{OA} = 27.4$ N **Ans.**

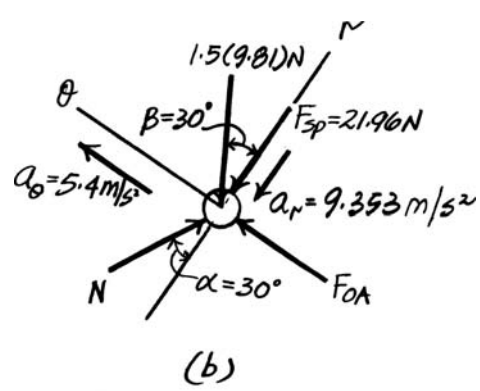

•13–109. Using air pressure, the 0.5-kg ball is forced to move through the tube lying in the horizontal plane and having the shape of a logarithmic spiral. If the tangential force exerted on the ball due to air pressure is 6 N, determine the rate of increase in the ball's speed at the instant $\theta = \pi/2$. Also, what is the angle ψ from the extended radial coordinate r to the line of action of the 6-N force?

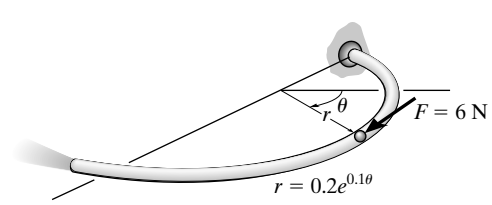

$$\tan \psi = \frac{r}{dr/d\theta} = \frac{0.2e^{0.1\theta}}{0.02e^{0.1\theta}} = 10 \qquad \psi = 84.3°$$ **Ans.**

$$\Sigma F_t = ma_t; \qquad 6 = 0.5a_t \qquad a_t = 12 \text{ m/s}^2$$ **Ans.**

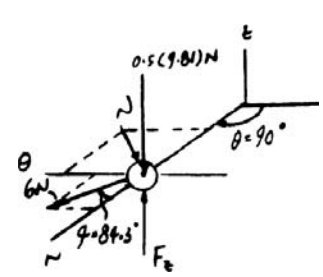

© 2010 Pearson Education, Inc., Upper Saddle River, NJ. All rights reserved. This material is protected under all copyright laws as they currently exist. No portion of this material may be reproduced, in any form or by any means, without permission in writing from the publisher.

13–110. The tube rotates in the horizontal plane at a constant rate of $\dot{\theta} = 4$ rad/s. If a 0.2-kg ball B starts at the origin O with an initial radial velocity of $\dot{r} = 1.5$ m/s and moves outward through the tube, determine the radial and transverse components of the ball's velocity at the instant it leaves the outer end at C, $r = 0.5$ m. *Hint:* Show that the equation of motion in the r direction is $\ddot{r} - 16r = 0$. The solution is of the form $r = Ae^{-4t} + Be^{4t}$. Evaluate the integration constants A and B, and determine the time t when $r = 0.5$ m. Proceed to obtain v_r and v_θ.

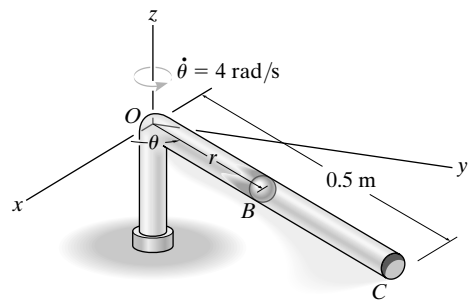

$\dot{\theta} = 4 \qquad \ddot{\theta} = 0$

$\Sigma F_r = ma_r; \qquad 0 = 0.2\left[\ddot{r} - r(4)^2\right]$

$\ddot{r} - 16r = 0$

Solving this second-order differential equation,

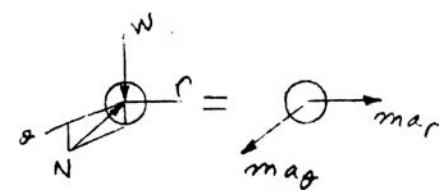

$$r = Ae^{-4t} + Be^{4t} \qquad \textbf{(1)}$$

$$\dot{r} = -4Ae^{-4t} + 4Be^{4t} \qquad \textbf{(2)}$$

At $t = 0, r = 0, \dot{r} = 1.5$:

$$0 = A + B \qquad \frac{1.5}{4} = -A + B$$

$$A = -0.1875 \qquad B = 0.1875$$

From Eq. (1) at $r = 0.5$ m,

$$0.5 = 0.1875\left(-e^{-4t} + e^{4t}\right)$$

$$\frac{2.667}{2} = \frac{(-e^{-4t} + e^{4t})}{2}$$

$$1.333 = \sin\text{h}(4t)$$

$$t = \frac{1}{4}\sin\text{h}^{-1}(1.333) \qquad t = 0.275 \text{ s}$$

Using Eq. (2),

$$\dot{r} = 4(0.1875)\left(e^{-4t} + e^{4t}\right)$$

$$\dot{r} = 8(0.1875)\left(\frac{e^{-4t} + e^{4t}}{2}\right) = 8(0.1875)(\cos\text{h}(4t))$$

At $t = 0.275$ s:

$$\dot{r} = 1.5\cos\text{h}[4(0.275)]$$

$$v_t = r = 2.50 \text{ m/s} \qquad \textbf{Ans.}$$

$$v_\theta = r\dot{\theta} = 0.5(4) = 2 \text{ m/s} \qquad \textbf{Ans.}$$

© 2010 Pearson Education, Inc., Upper Saddle River, NJ. All rights reserved. This material is protected under all copyright laws as they currently exist. No portion of this material may be reproduced, in any form or by any means, without permission in writing from the publisher.

13–111. The pilot of an airplane executes a vertical loop which in part follows the path of a cardioid, $r = 600(1 + \cos\theta)$ ft. If his speed at A $(\theta = 0°)$ is a constant $v_P = 80$ ft/s, determine the vertical force the seat belt must exert on him to hold him to his seat when the plane is upside down at A. He weighs 150 lb.

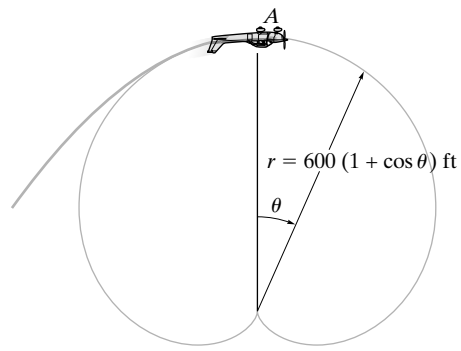

$r = 600(1 + \cos\theta)|_{\theta=0°} = 1200$ ft

$\dot{r} = -600 \sin\theta\dot{\theta}\big|_{\theta=0°} = 0$

$\ddot{r} = -600 \sin\theta\ddot{\theta} - 600 \cos\theta\dot{\theta}^2\big|_{\theta=0°} = -600\dot{\theta}^2$

$v_p^2 = \dot{r}^2 + \left(r\dot{\theta}\right)^2$

$(80)^2 = 0 + \left(1200\dot{\theta}\right)^2 \qquad \dot{\theta} = 0.06667$

$2v_p v_p = 2r\ddot{r} + 2\left(r\dot{\theta}\right)\left(\dot{r}\theta + r\ddot{\theta}\right)$

$0 = 0 + 0 + 2r^2\,\theta\ddot{\theta} \qquad \ddot{\theta} = 0$

$a_r = \ddot{r} - r\dot{\theta}^2 = -600(0.06667)^2 - 1200(0.06667)^2 = -8 \text{ ft/s}^2$

$a_\theta = r\ddot{\theta} + 2\dot{r}\dot{\theta} = 0 + 0 = 0$

$+\uparrow \Sigma F_r = ma_r; \qquad N - 150 = \left(\frac{150}{32.2}\right)(-8) \qquad N = 113 \text{ lb}$ **Ans.**

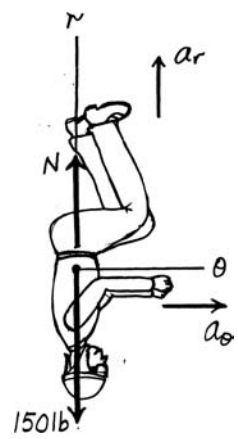

***13–112.** The 0.5-lb ball is guided along the vertical circular path $r = 2r_c \cos\theta$ using the arm OA. If the arm has an angular velocity $\dot{\theta} = 0.4$ rad/s and an angular acceleration $\ddot{\theta} = 0.8$ rad/s^2 at the instant $\theta = 30°$, determine the force of the arm on the ball. Neglect friction and the size of the ball. Set $r_c = 0.4$ ft.

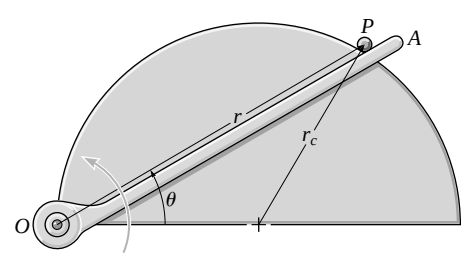

$r = 2(0.4)\cos\theta = 0.8\cos\theta$

$\dot{r} = -0.8 \sin\theta\dot{\theta}$

$\ddot{r} = -0.8 \cos\theta\dot{\theta}^2 - 0.8 \sin\theta\ddot{\theta}$

At $\theta = 30°$, $\dot{\theta} = 0.4$ rad/s, and $\ddot{\theta} = 0.8$ rad/s^2

$r = 0.8 \cos 30° = 0.6928$ ft

$\dot{r} = -0.8 \sin 30°(0.4) = -0.16$ ft/s

$\ddot{r} = -0.8 \cos 30°(0.4)^2 - 0.8 \sin 30°(0.8) = -0.4309$ ft/s^2

$a_r = \ddot{r} - r\dot{\theta}^2 = -0.4309 - 0.6928(0.4)^2 = -0.5417$ ft/s^2

$a_\theta = r\ddot{\theta} + 2\dot{r}\dot{\theta} = 0.6928(0.8) + 2(-0.16)(0.4) = 0.4263$ ft/s^2

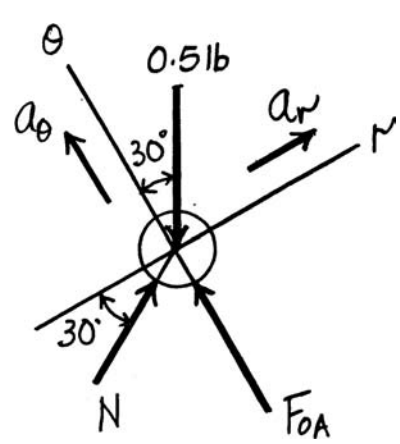

$+\nearrow \Sigma F_r = ma_r; \qquad N \cos 30° - 0.5 \sin 30° = \frac{0.5}{32.2}(-0.5417) \qquad N = 0.2790 \text{ lb}$

$\nwarrow + \Sigma F_\theta = ma_\theta; \qquad F_{OA} + 0.2790 \sin 30° - 0.5 \cos 30° = \frac{0.5}{32.2}(0.4263)$

$F_{OA} = 0.300$ lb **Ans.**

© 2010 Pearson Education, Inc., Upper Saddle River, NJ. All rights reserved. This material is protected under all copyright laws as they currently exist. No portion of this material may be reproduced, in any form or by any means, without permission in writing from the publisher.

•13–113. The ball of mass m is guided along the vertical circular path $r = 2r_c \cos\theta$ using the arm OA. If the arm has a constant angular velocity $\dot{\theta}_0$, determine the angle $\theta \leq 45°$ at which the ball starts to leave the surface of the semicylinder. Neglect friction and the size of the ball.

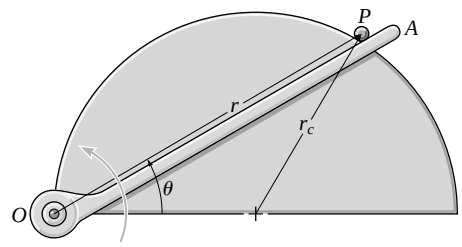

$$r = 2r_c \cos\theta$$

$$\dot{r} = -2r_c \sin\theta\dot{\theta}$$

$$\ddot{r} = -2r_c \cos\theta\dot{\theta}^2 - 2r_c \sin\theta\ddot{\theta}$$

Since $\dot{\theta}$ is constant, $\ddot{\theta} = 0$.

$$a_r = \ddot{r} - r\dot{\theta}^2 = -2r_c \cos\theta\dot{\theta}_0^2 - 2r_c \cos\theta\dot{\theta}_0^2 = -4r_c \cos\theta\dot{\theta}_0^2$$

$$+\nearrow \Sigma F_r = ma_r; \qquad -mg \sin\theta = m(-4r_c \cos\theta\dot{\theta}_0^2)$$

$$\tan\theta = \frac{4r_c\,\dot{\theta}_0^2}{g} \qquad \theta = \tan^{-1}\left(\frac{4r_c\,\dot{\theta}_0^2}{g}\right) \qquad \textbf{Ans.}$$

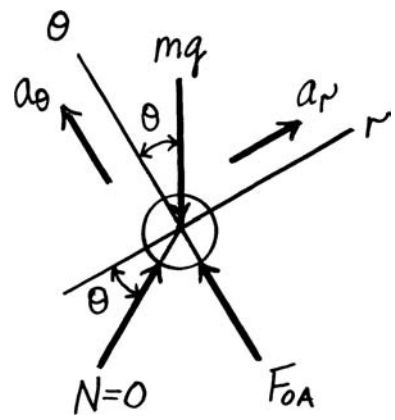

13–114. The ball has a mass of 1 kg and is confined to move along the smooth vertical slot due to the rotation of the smooth arm OA. Determine the force of the rod on the ball and the normal force of the slot on the ball when $\theta = 30°$. The rod is rotating with a constant angular velocity $\dot{\theta} = 3$ rad/s. Assume the ball contacts only one side of the slot at any instant.

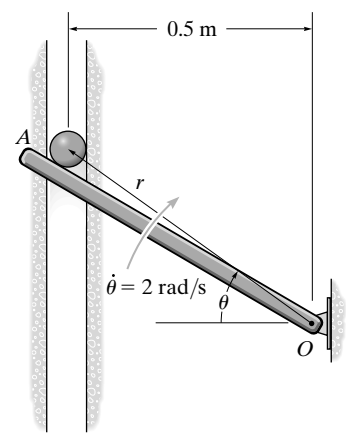

Kinematics: Here, $\dot{\theta} = 3$ rad/s and $\ddot{\theta} = 0$. Taking the required time derivatives at $\theta = 30°$, we have

$$r = \left.\frac{0.5}{\cos\theta}\right|_{\theta=30°} = 0.5774 \text{ m}$$

$$\dot{r} = \left.\frac{0.5 \sin\theta}{\cos^2\theta}\dot{\theta} = 0.5 \tan\theta \sec\theta\dot{\theta}\right|_{\theta=30°} 1.00 \text{ m/s}$$

$$\ddot{r} = 0.5\left[\tan\theta \sec\theta\ddot{\theta} + \left(\sec^3\theta + \tan^2\theta \sec\theta\right)\dot{\theta}^2\right]\Big|_{\theta=30°} = 8.660 \text{ m/s}^2$$

Applying Eqs. 12–29, we have

$$a_r = \ddot{r} - r\dot{\theta}^2 = 8.660 - 0.5774\left(3^2\right) = 3.464 \text{ m/s}^2$$

$$a_\theta = r\ddot{\theta} + 2\dot{r}\dot{\theta} = 0.5774(0) + 2(1.00)(3) = 6.00 \text{m/s}^2$$

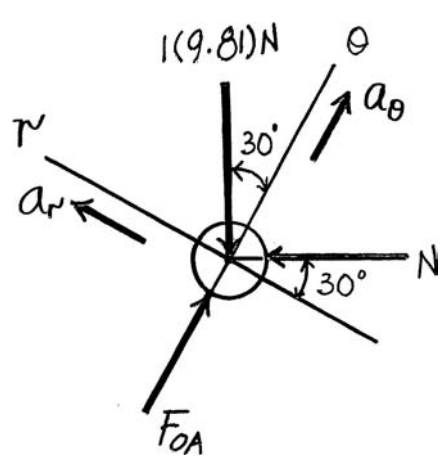

Equations of Motion:

$$\nwarrow + \Sigma F_r = ma_r; \qquad N\cos 30° - 1(9.81)\sin 30° = 1(3.464)$$

$$N = 9.664 \text{ N} = 9.66 \text{ N} \qquad \textbf{Ans.}$$

$$+\nearrow \Sigma F_\theta = ma_\theta; \qquad F_{OA} - 1(9.81)\cos 30° - 9.664 \sin 30° = 1(6.00)$$

$$F_{OA} = 19.3 \text{ N} \qquad \textbf{Ans.}$$

© 2010 Pearson Education, Inc., Upper Saddle River, NJ. All rights reserved. This material is protected under all copyright laws as they currently exist. No portion of this material may be reproduced, in any form or by any means, without permission in writing from the publisher.

13–115. Solve Prob. 13–114 if the arm has an angular acceleration of $\ddot{\theta} = 2\ \text{rad/s}^2$ when $\dot{\theta} = 3\ \text{rad/s}$ at $\theta = 30°$.

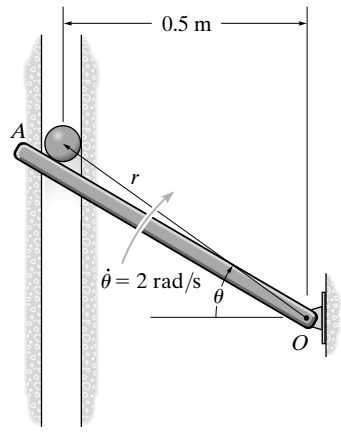

Kinematics: Here, $\dot{\theta} = 3\ \text{rad/s}$ and $\ddot{\theta} = 2\ \text{rad/s}^2$. Taking the required time derivatives at $\theta = 30°$, we have

$$r = \left.\frac{0.5}{\cos\theta}\right|_{\theta=30°} = 0.5774\ \text{m}$$

$$\dot{r} = \left.\frac{0.5\sin\theta}{\cos^2\theta}\dot{\theta} = 0.5\tan\theta\sec\theta\dot{\theta}\right|_{\theta=30°} = 1.00\ \text{m/s}$$

$$\ddot{r} = 0.5\left[\tan\theta\sec\theta\ddot{\theta} + \left(\sec^2\theta + \tan^2\theta\sec\theta\right)\dot{\theta}^2\right]\Bigg|_{\theta=30°} = 9.327\ \text{m/s}^2$$

Applying Eqs. 12–29, we have

$$a_r = \ddot{r} - r\dot{\theta}^2 = 9.327 - 0.5774\left(3^2\right) = 4.131\ \text{m/s}^2$$

$$a_\theta = r\ddot{\theta} + 2\dot{r}\dot{\theta} = 0.5774(2) + 2(1.00)(3) = 7.155\ \text{m/s}^2$$

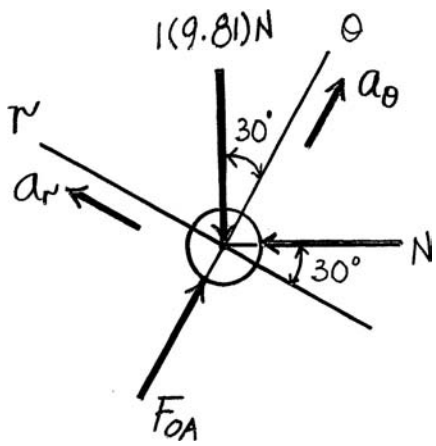

Equations of Motion:

$\Sigma F_r = ma_r;$ $\quad N\cos 30° - 1(9.81)\sin 30° = 1(4.131)$

$N = 10.43\ \text{N} = 10.4\ \text{N}$ **Ans.**

$\Sigma F_\theta = ma_\theta;$ $\quad F_{OA} - 1(9.81)\cos 30° - 10.43\sin 30° = 1(7.155)$

$F_{OA} = 20.9\ \text{N}$ **Ans.**

© 2010 Pearson Education, Inc., Upper Saddle River, NJ. All rights reserved. This material is protected under all copyright laws as they currently exist. No portion of this material may be reproduced, in any form or by any means, without permission in writing from the publisher.

***13–116.** Prove Kepler's third law of motion. *Hint:* Use Eqs. 13–19, 13–28, 13–29, and 13–31.

From Eq. 13–19,

$$\frac{1}{r} = C\cos\theta + \frac{GM_s}{h^2}$$

For $\theta = 0°$ and $\theta = 180°$,

$$\frac{1}{r_p} = C + \frac{GM_s}{h^2}$$

$$\frac{1}{r_a} = -C + \frac{GM_s}{h^2}$$

Eliminating C, from Eqs. 13–28 and 13–29,

$$\frac{2a}{b^2} = \frac{2GM_s}{h^2}$$

From Eq. 13–31,

$$T = \frac{\pi}{h}(2a)(b)$$

Thus,

$$b^2 = \frac{T^2h^2}{4\pi^2a^2}$$

$$\frac{4\pi^2a^3}{T^2h^2} = \frac{GM_s}{h^2}$$

$$T^2 = \left(\frac{4\pi^2}{GM_s}\right)a^3$$

Q.E.D.

© 2010 Pearson Education, Inc., Upper Saddle River, NJ. All rights reserved. This material is protected under all copyright laws as they currently exist. No portion of this material may be reproduced, in any form or by any means, without permission in writing from the publisher.

•13–117. The Viking explorer approaches the planet Mars on a parabolic trajectory as shown. When it reaches point A its velocity is 10 Mm/h. Determine r_0 and the required velocity at A so that it can then maintain a circular orbit as shown. The mass of Mars is 0.1074 times the mass of the earth.

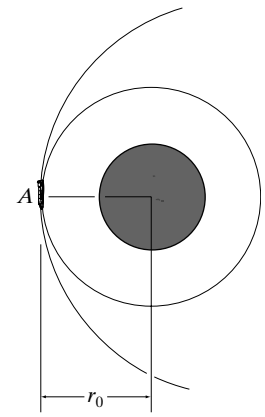

When the Viking explorer approaches point A on a parabolic trajectory, its velocity at point A is given by

$$v_A = \sqrt{\frac{2GM_M}{r_0}}$$

$$\left[10(10^6)\,\frac{\text{m}}{\text{h}}\right]\left(\frac{1\text{ h}}{3600\text{ s}}\right) = \sqrt{\frac{2(66.73)(10^{-12})\left[0.1074(5.976)(10^{24})\right]}{r_0}}$$

$$r_0 = 11.101(10^6)\text{ m} = 11.1\text{ Mm}$$ **Ans.**

When the explorer travels along a circular orbit of $r_0 = 11.101(10^6)$ m, its velocity is

$$v_{A'} = \sqrt{\frac{GM_r}{r_0}} = \sqrt{\frac{66.73(10^{-12})\left[0.1074(5.976)(10^{24})\right]}{11.101(10^6)}}$$

$$= 1964.19\text{ m/s}$$

Thus, the required sudden decrease in the explorer's velocity is

$$\Delta v_A = v_A - v_{A'}$$

$$= 10(10^6)\left(\frac{1}{3600}\right) - 1964.19$$

$$= 814\text{ m/s}$$ **Ans.**

© 2010 Pearson Education, Inc., Upper Saddle River, NJ. All rights reserved. This material is protected under all copyright laws as they currently exist. No portion of this material may be reproduced, in any form or by any means, without permission in writing from the publisher.

13–118. The satellite is in an elliptical orbit around the earth as shown. Determine its velocity at perigee P and apogee A, and the period of the satellite.

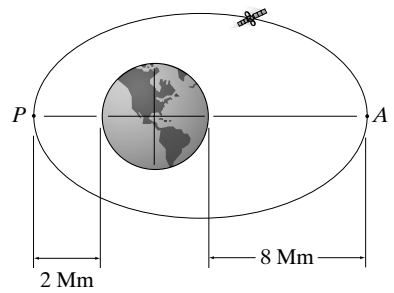

Here,

$$r_0 = r_p = 2(10^6) + 6378(10^3) = 8.378(10^6)\text{ m}$$

and

$$r_a = 8(10^6) + 6378(10^3)$$

$$= 14.378(10^6)\text{ m}$$

$$r_a = \frac{r_0}{\dfrac{2GM_e}{r_0 v_0^2} - 1}$$

$$14.378(10^6) = \frac{8.378(10^6)}{\dfrac{2(66.73)(10^{-12})(5.976)(10^{24})}{8.378(10^6)v_0{}^2} - 1}$$

$$v_p = v_0 = 7755.53\text{ m/s} = 7.76\text{ km/s}$$ **Ans.**

Using the result of v_p, we have

$$h = r_p v_p = r_a v_a$$

$$h = 8.378(10^6)(7755.53\text{ m/s}) = 14.378(10^6)v_a$$

$$v_A = v_a = 4519.12\text{ m/s} = 4.52\text{ km/s}$$ **Ans.**

$$h = r_p v_p = 8.378(10^6)(7755.53)$$

$$= 64.976(10^9)\text{ m}^2/\text{s}$$

Thus,

$$T = \frac{\pi}{h}\left(r_p + r_a\right)\sqrt{r_p r_a}$$

$$= \frac{\pi}{64.976(10^9)}\left[8.378(10^6) + 14.378(10^6)\right]\sqrt{8.378(10^6)(14.378)(10^6)}$$

$$= 12\,075.71\text{ s} = 3.35\text{ hr}$$ **Ans.**

© 2010 Pearson Education, Inc., Upper Saddle River, NJ. All rights reserved. This material is protected under all copyright laws as they currently exist. No portion of this material may be reproduced, in any form or by any means, without permission in writing from the publisher.

13–119. The satellite is moving in an elliptical orbit with an eccentricity $e = 0.25$. Determine its speed when it is at its maximum distance A and minimum distance B from the earth.

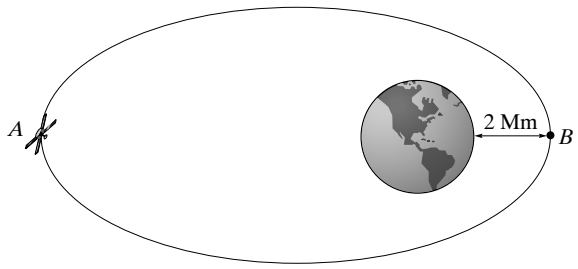

$$e = \frac{Ch^2}{GM_e}$$

where $C = \frac{1}{r_0}\left(1 - \frac{GM_e}{r_0 v_0^2}\right)$ and $h = r_0\, v_0$.

$$e = \frac{1}{GM_e\, r_0}\left(1 - \frac{GM_e}{r_0\, v_0^2}\right)(r_0\, v_0)^2$$

$$e = \left(\frac{r_0\, v_0^2}{GM_e} - 1\right)$$

$$\frac{r_0\, v_0^2}{GM_e} = e + 1 \qquad v_0 = \sqrt{\frac{GM_e\,(e + 1)}{r_0}}$$

where $r_0 = r_p = 2\left(10^6\right) + 6378\left(10^3\right) = 8.378\left(10^6\right)$ m.

$$v_B = v_0 = \sqrt{\frac{66.73(10^{-12})(5.976)(10^{24})(0.25 + 1)}{8.378(10^6)}} = 7713 \text{ m/s} = 7.71 \text{ km/s} \qquad \textbf{Ans.}$$

$$r_a = \frac{r_0}{\dfrac{2GM_e}{r_0\, v_0} - 1} = \frac{8.378(10^6)}{\dfrac{2(66.73)(10^{-12})(5.976)(10^{24})}{8.378(10^6)(7713)^2} - 1} = 13.96\left(10^6\right) \text{ m}$$

$$v_A = \frac{r_p}{r_a} v_B = \frac{8.378(10^6)}{13.96(10^6)}(7713) = 4628 \text{ m/s} = 4.63 \text{ km/s} \qquad \textbf{Ans.}$$

© 2010 Pearson Education, Inc., Upper Saddle River, NJ. All rights reserved. This material is protected under all copyright laws as they currently exist. No portion of this material may be reproduced, in any form or by any means, without permission in writing from the publisher.

***13–120.** The space shuttle is launched with a velocity of 17 500 mi/h parallel to the tangent of the earth's surface at point P and then travels around the elliptical orbit. When it reaches point A, its engines are turned on and its velocity is suddenly increased. Determine the required increase in velocity so that it enters the second elliptical orbit. Take $G = 34.4(10^{-9})\,\text{ft}^4/\text{lb}\cdot\text{s}^4$, $M_e = 409(10^{21})$ slug, and $r_e = 3960\,\text{mi}$, where 5280 ft = mi.

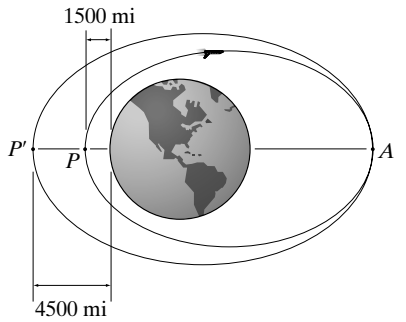

For the first elliptical orbit,

$$r_P = 1500 + 3960 = (5460\text{ mi})\left(\frac{5280\text{ ft}}{1\text{ mi}}\right) = 28.8288(10^6)\text{ ft}$$

and

$$v_P = \left(17500\frac{\text{mi}}{\text{h}}\right)\left(\frac{5280\text{ ft}}{1\text{ mi}}\right)\left(\frac{1\text{h}}{3600\text{ s}}\right) = 25\,666.67\text{ ft/s}$$

Using the results of r_p and v_p,

$$r_a = \frac{r_P}{\dfrac{2GM_e}{r_p v_P{}^2} - 1} = \frac{28.8288(10^6)}{\dfrac{2(34.4)(10^{-9})(409)(10^{21})}{28.8288(10^6)(25666.67^2)} - 1}$$

$$= 59.854(10^6)\text{ ft/s}$$

Since $h = r_P v_P = 28.8288(10^6)(25666.67) = 739.94(10^9)\text{ ft}^2/\text{s}$ is constant,

$$r_a v_a = h$$

$$59.854(10^6)v_a = 739.94(10^9)$$

$$v_a = 12\,362.40\text{ ft/s}$$

When the shuttle enters the second elliptical orbit, $r_P{}' = 4500 + 3960 = 8460\text{ mi}\left(\dfrac{5280\text{ ft}}{1\text{ mi}}\right) = 44.6688(10^6)$ ft and $r_a{}' = r_a = 59.854(10^6)$ ft.

$$r_a{}' = \frac{r_P{}'}{\dfrac{2GM_e}{r_P{}'\left(v_P{}'\right)^2} - 1}$$

$$59.854(10^6) = \frac{44.6688(10^6)}{\dfrac{2(34.4)(10^{-9})(409)(10^{21})}{44.6688(10^6)\left(v_P{}'\right)^2} - 1}$$

$$v_P{}' = 18\,993.05\text{ ft}/s$$

Since $h' = r_P{}' v_P{}' = 44.6688(10^6)(18\,993.05) = 848.40(10^9)\text{ ft}^2/\text{s}$ is constant,

$$r_a{}' v_a{}' = h'$$

$$59.854(10^6)v_a{}' = 848.40(10^9)$$

$$v_a{}' = 14\,174.44\text{ ft/s}$$

Thus, the required increase in the shuttle's speed at point A is

$$\Delta v_A = v_{A'} - v_A = 14\,174.44 - 12\,362.40$$

$$= 1812.03\text{ ft/s} = 1812\text{ ft/s} \qquad \textbf{Ans.}$$

© 2010 Pearson Education, Inc., Upper Saddle River, NJ. All rights reserved. This material is protected under all copyright laws as they currently exist. No portion of this material may be reproduced, in any form or by any means, without permission in writing from the publisher.

•13–121. Determine the increase in velocity of the space shuttle at point P so that it travels from a circular orbit to an elliptical orbit that passes through point A. Also, compute the speed of the shuttle at A.

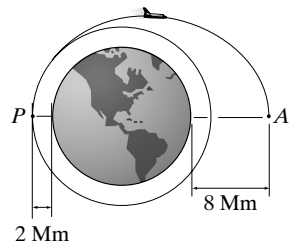

When the shuttle is travelling around the circular orbit of radius $r_o = 2(10^6) + 6378(10^3) = 8.378(10^6)$ m, its speed is

$$v_o = \sqrt{\frac{GM_e}{r_o}} = \sqrt{\frac{66.73(10^{-12})(5.976)(10^{24})}{8.378(10^6)}} = 6899.15 \text{ m/s}$$

When the shuttle enters the elliptical orbit, $r_p = r_o = 8.378(10^6)$ m and $r_a = 8(10^6) + 6378(10^3) = 14.378(10^6)$ m.

$$r_a = \frac{r_p}{\dfrac{2GM_e}{r_p v_p^2} - 1}$$

$$14.378(10^6) = \frac{8.378(10^6)}{\dfrac{2(66.73)(10^{-12})(5.976)(10^{24})}{8.378(10^6)v_p^2} - 1}$$

$$v_p = 7755.54 \text{ m/s}$$

Thus, the required increase in speed for the shuttle at point P is

$$\Delta v_p = v_p - v_o = 7755.54 - 6899.15 = 856.39 \text{ m/s} = 856 \text{ m/s}$$ **Ans.**

Since $h = r_p v_p = 8.378(10^6)(7755.54) = 64.976(10^9)$ m^2/s is constant,

$$r_a v_a = h$$

$$14.378(10^6)v_a = 64.976(10^9)$$

$$v_A = 4519.11 \text{ m/s} = 4.52 \text{ km/s}$$ **Ans.**

13–122. The rocket is in free flight along an elliptical trajectory $A'A$. The planet has no atmosphere, and its mass is 0.60 times that of the earth. If the orbit has the apoapsis and periapsis shown, determine the rocket's velocity when it is at point A. Take $G = 34.4(10^{-9})(\text{lb}\cdot\text{ft}^2)/\text{slug}^2$, $M_e = 409(10^{21})$ slug, 1 mi = 5280 ft.

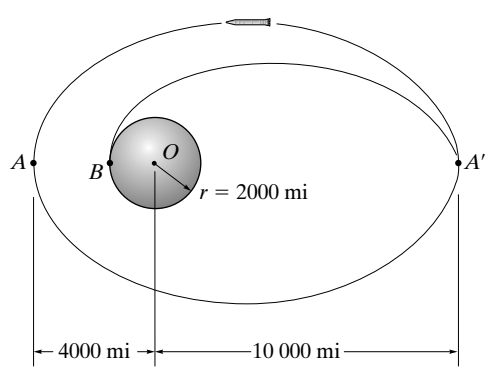

$$r_0 = OA = (4000)(5280) = 21.12\left(10^6\right) \text{ ft}$$

$$OA' = (10\,000)(5280) = 52.80\left(10^6\right)\text{ft}$$

$$M_P = \left(409\left(10^{21}\right)\right)(0.6) = 245.4\left(10^{21}\right) \text{ slug}$$

$$OA' = \frac{OA}{\left(\dfrac{2GM_p}{OAv_0^2} - 1\right)}$$

$$v_0 = \sqrt{\frac{2GM_P}{OA\left(\dfrac{OA}{OA'} + 1\right)}} = \sqrt{\frac{2(34.4)(10^{-9})(245.4)(10^{21})}{21.12(10^6)\left(\dfrac{21.12}{52.80} + 1\right)}}$$

$$v_0 = 23.9\left(10^3\right) \text{ ft/s}$$ **Ans.**

© 2010 Pearson Education, Inc., Upper Saddle River, NJ. All rights reserved. This material is protected under all copyright laws as they currently exist. No portion of this material may be reproduced, in any form or by any means, without permission in writing from the publisher.

13–123. If the rocket is to land on the surface of the planet, determine the required free-flight speed it must have at A' so that the landing occurs at B. How long does it take for the rocket to land, in going from A' to B? The planet has no atmosphere, and its mass is 0.6 times that of the earth. Take $G = 34.4(10^{-9})(\text{lb}\cdot\text{ft}^2)/\text{slug}^2$, $M_e = 409(10^{21})$ slug, 1 mi = 5280 ft.

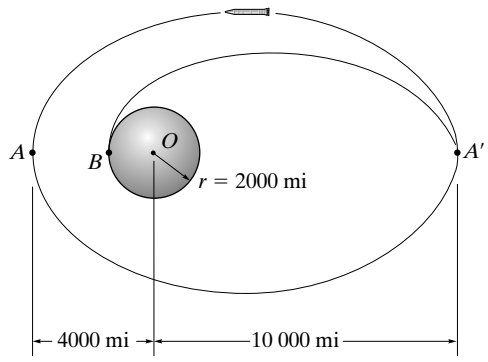

$$M_P = 409\left(10^{21}\right)(0.6) = 245.4\left(10^{21}\right)\text{ slug}$$

$$OA' = (10\,000)(5280) = 52.80\left(10^6\right)\text{ ft} \qquad OB = (2000)(5280) = 10.56\left(10^6\right)\text{ ft}$$

$$OA' = \frac{OB}{\left(\dfrac{2GM_P}{OBv_0^2} - 1\right)}$$

$$v_0 = \sqrt{\frac{2GM_P}{OB\left(\dfrac{OB}{OA'} + 1\right)}} = \sqrt{\frac{2(34.4(10^{-9}))245.4(10^{21})}{10.56(10^6)\left(\dfrac{10.56}{52.80} + 1\right)}}$$

$$v_0 = 36.50\left(10^3\right)\text{ ft/s} \qquad \text{(speed at } B\text{)}$$

$$v_{A'} = \frac{OBv_0}{OA'}$$

$$v_{A'} = \frac{10.56(10^6)36.50(10^3)}{52.80(10^6)}$$

$$v_{A'} = 7.30\left(10^3\right)\text{ ft/s} \qquad \textbf{Ans.}$$

$$T = \frac{\pi}{h}(OB + OA')\sqrt{(OB)(OA')}$$

$$h = (OB)(v_0) = 10.56\left(10^6\right)36.50\left(10^3\right) = 385.5\left(10^9\right)$$

Thus,

$$T = \frac{\pi(10.56 + 52.80)(10^6)}{385.5(10^9)}\left(\sqrt{(10.56)(52.80)}\right)\left(10^6\right)$$

$$T = 12.20\left(10^3\right)\text{ s}$$

$$t = \frac{T}{2} = 6.10\left(10^3\right)\text{ s} = 1.69\text{ h} \qquad \textbf{Ans.}$$

© 2010 Pearson Education, Inc., Upper Saddle River, NJ. All rights reserved. This material is protected under all copyright laws as they currently exist. No portion of this material may be reproduced, in any form or by any means, without permission in writing from the publisher.

***13–124.** A communications satellite is to be placed into an equatorial circular orbit around the earth so that it always remains directly over a point on the earth's surface. If this requires the period to be 24 hours (approximately), determine the radius of the orbit and the satellite's velocity.

$$\frac{GM_eM_s}{r^2} = \frac{M_s v^2}{r}$$

$$\frac{GM_e}{r} = v^2$$

$$\frac{GM_e}{r} = \left[\frac{2\pi r}{24(3600)}\right]^2$$

$$\frac{66.73(10^{-12})(5.976)(10^{24})}{\left[\frac{2\pi}{24(3600)}\right]^2} = r^3$$

$$r = 42.25(10^6)\text{ m} = 42.2\text{ Mm} \qquad \textbf{Ans.}$$

$$v = \frac{2\pi(42.25)(10^6)}{24(3600)} = 3.07\text{ km/s} \qquad \textbf{Ans.}$$

•13–125. The speed of a satellite launched into a circular orbit about the earth is given by Eq. 13–25. Determine the speed of a satellite launched parallel to the surface of the earth so that it travels in a circular orbit 800 km from the earth's surface.

For a 800-km orbit

$$v_0 = \sqrt{\frac{66.73(10^{-12})(5.976)(10^{24})}{(800 + 6378)(10^3)}}$$

$$= 7453.6\text{ m/s} = 7.45\text{ km/s} \qquad \textbf{Ans.}$$

© 2010 Pearson Education, Inc., Upper Saddle River, NJ. All rights reserved. This material is protected under all copyright laws as they currently exist. No portion of this material may be reproduced, in any form or by any means, without permission in writing from the publisher.

13–126. The earth has an orbit with eccentricity $e = 0.0821$ around the sun. Knowing that the earth's minimum distance from the sun is $151.3(10^6)$ km, find the speed at which a rocket travels when it is at this distance. Determine the equation in polar coordinates which describes the earth's orbit about the sun.

$$e = \frac{Ch^2}{GM_S} \qquad \text{where } C = \frac{1}{r_0}\left(1 - \frac{GM_S}{r_0 v_0^2}\right) \text{ and } h = r_0 v_0$$

$$e = \frac{1}{GM_S r_0}\left(1 - \frac{GM_S}{r_0 v_0^2}\right)(r_0 v_0)^2 \qquad e = \left(\frac{r_0 v_0^2}{GM_S} - 1\right) \qquad \frac{r_0 v_0^2}{GM_S} = e + 1$$

$$v_0 = \sqrt{\frac{GM_S(e+1)}{r_0}}$$

$$= \sqrt{\frac{66.73(10^{-12})(1.99)(10^{30})(0.0821+1)}{151.3(10^9)}} = 30818 \text{ m/s} = 30.8 \text{ km/s} \qquad \textbf{Ans.}$$

$$\frac{1}{r} = \frac{1}{r_0}\left(1 - \frac{GM_S}{r_0 v_0^2}\right)\cos\theta + \frac{GM_S}{r_0^2 v_0^2}$$

$$\frac{1}{r} = \frac{1}{151.3(10^9)}\left(1 - \frac{66.73(10^{-12})(1.99)(10^{30})}{151.3(10^9)(30818)^2}\right)\cos\theta + \frac{66.73(10^{-12})(1.99)(10^{30})}{\left[151.3(10^9)\right]^2(30818)^2}$$

$$\frac{1}{r} = 0.502(10^{-12})\cos\theta + 6.11(10^{-12}) \qquad \textbf{Ans.}$$

13–127. A rocket is in a free-flight elliptical orbit about the earth such that the eccentricity of its orbit is e and its perigee is r_0. Determine the minimum increment of speed it should have in order to escape the earth's gravitational field when it is at this point along its orbit.

To escape the earth's gravitational field, the rocket has to make a parabolic trajectory.

Parabolic Trajectory:

$$v_e = \sqrt{\frac{2GM_e}{r_0}}$$

Elliptical Orbit:

$$e = \frac{Ch^2}{GM_e} \qquad \text{where } C = \frac{1}{r_0}\left(1 - \frac{GM_e}{r_0 v_0^2}\right) \text{ and } h = r_0 v_0$$

$$e = \frac{1}{GM_e r_0}\left(1 - \frac{GM_e}{r_0 v_0^2}\right)(r_0 v_0)^2$$

$$e = \left(\frac{r_0 v_0^2}{GM_e} - 1\right)$$

$$\frac{r_0 v_0^2}{GM_e} = e + 1 \qquad v_0 = \sqrt{\frac{GM_e(e+1)}{r_0}}$$

$$\Delta v = \sqrt{\frac{2GM_e}{r_0}} - \sqrt{\frac{GM_e(e+1)}{r_0}} = \sqrt{\frac{GM_e}{r_0}}\left(\sqrt{2} - \sqrt{1+e}\right) \qquad \textbf{Ans.}$$

© 2010 Pearson Education, Inc., Upper Saddle River, NJ. All rights reserved. This material is protected under all copyright laws as they currently exist. No portion of this material may be reproduced, in any form or by any means, without permission in writing from the publisher.

***13–128.** A rocket is in circular orbit about the earth at an altitude of $h = 4$ Mm. Determine the minimum increment in speed it must have in order to escape the earth's gravitational field.

Circular Orbit:

$$v_C = \sqrt{\frac{GM_e}{r_0}} = \sqrt{\frac{66.73(10^{-12})5.976(10^{24})}{4000(10^3) + 6378(10^3)}} = 6198.8 \text{ m/s}$$

Parabolic Orbit:

$$v_e = \sqrt{\frac{2GM_e}{r_0}} = \sqrt{\frac{2(66.73)(10^{-12})5.976(10^{24})}{4000(10^3) + 6378(10^3)}} = 8766.4 \text{ m/s}$$

$$\Delta v = v_e - v_C = 8766.4 - 6198.8 = 2567.6 \text{ m/s}$$

$$\Delta v = 2.57 \text{ km/s}$$ **Ans.**

•13–129. The rocket is in free flight along an elliptical trajectory $A'A$. The planet has no atmosphere, and its mass is 0.70 times that of the earth. If the rocket has an apoapsis and periapsis as shown in the figure, determine the speed of the rocket when it is at point A.

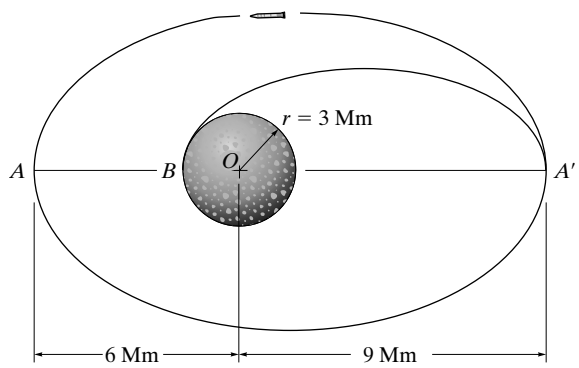

Central-Force Motion: Use $r_a = \dfrac{r_0}{(2\,GM/r_0\,v_0^2) - 1}$, with $r_0 = r_p = 6(10^6)$ m and $M = 0.70M_e$, we have

$$9(10^6) = \frac{6(10)^6}{\left(\dfrac{2(66.73)\,(10^{-12})\,(0.7)\,[5.976(10^{24})]}{6(10^6)v_P^2}\right) - 1}$$

$$v_P = 7471.89 \text{ m/s} = 7.47 \text{ km/s}$$ **Ans.**

© 2010 Pearson Education, Inc., Upper Saddle River, NJ. All rights reserved. This material is protected under all copyright laws as they currently exist. No portion of this material may be reproduced, in any form or by any means, without permission in writing from the publisher.

13–130. If the rocket is to land on the surface of the planet, determine the required free-flight speed it must have at A' so that it strikes the planet at B. How long does it take for the rocket to land, going from A' to B along an elliptical path? The planet has no atmosphere, and its mass is 0.70 times that of the earth.

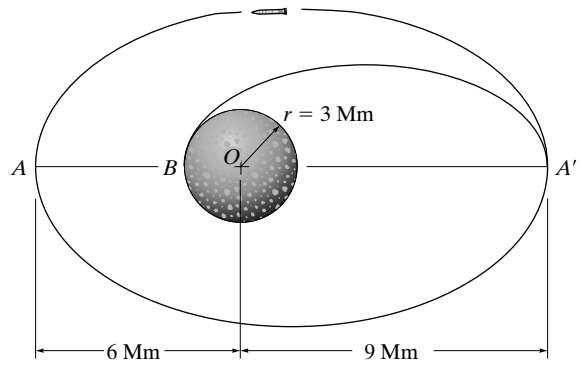

Central-Force Motion: Use $r_A = \dfrac{r_0}{\left(2GM/r_0\,v_0^2\right) - 1}$, with $r_A = 9\left(10^6\right)$ m, $r_0 = r_P = 3\left(10^6\right)$ m, and $M = 0.70M_e$. We have

$$9\left(10^6\right) = \frac{3(10^6)}{\left(\dfrac{2(66.73)(10^{-12})\,(0.7)[5.976(10^{24})]}{3(10^6)v_P^2}\right) - 1}$$

$$v_P = 11814.08 \text{ m/s}$$

Applying Eq. 13–20, we have

$$v_A = \left(\frac{r_P}{r_A}\right)v_P = \left[\frac{3(10^6)}{9(10^6)}\right](11814.08) = 3938.03 \text{ m/s} = 3.94 \text{ km/s} \qquad \textbf{Ans.}$$

Eq. 13–20 gives $h = r_p\,v_p = 3\left(10^6\right)(11814.08) = 35.442\left(10^9\right)$ m^2/s. Thus, applying Eq.13–31, we have

$$T = \frac{\pi}{6}\left(r_P + r_A\right)\sqrt{r_P\,r_A}$$

$$= \frac{\pi}{35.442(10^9)}\left[(9 + 3)\left(10^6\right)\right]\sqrt{3(10^6)\,9\,(10^6)}$$

$$= 5527.03 \text{ s}$$

The time required for the rocket to go from A' to B (half the orbit) is given by

$$t = \frac{T}{2} = 2763.51 \text{ s} = 46.1 \text{ min} \qquad \textbf{Ans.}$$

© 2010 Pearson Education, Inc., Upper Saddle River, NJ. All rights reserved. This material is protected under all copyright laws as they currently exist. No portion of this material may be reproduced, in any form or by any means, without permission in writing from the publisher.

13–131. The satellite is launched parallel to the tangent of the earth's surface with a velocity of $v_0 = 30$ Mm/h from an altitude of 2 Mm above the earth as shown. Show that the orbit is elliptical, and determine the satellite's velocity when it reaches point A.

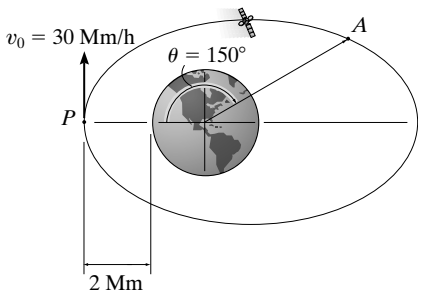

Here,

$$r_0 = 2(10^6) + 6378(10^3) = 8.378(10^6)\text{ m}$$

and

$$v_0 = \left[30(10^6)\frac{\text{m}}{\text{h}}\right]\left(\frac{1\text{ h}}{3600\text{ s}}\right) = 8333.33\text{m/s}$$

$$h = r_0 v_0 = 8.378(10^6)(8333.33) = 69.817(10^9)\text{ m}^2/\text{s}$$

and

$$C = \frac{1}{r_0}\left(1 - \frac{GM_e}{r_0 v_0{}^2}\right)$$

$$= \frac{1}{8.378(10^6)}\left[1 - \frac{66.73(10^{-12})(5.976)(10^{24})}{8.378(10^6)(8333.33^2)}\right]$$

$$= 37.549(10^{-9})\text{ m}^{-1}$$

The eccentricity of the satellite orbit is given by

$$e = \frac{Ch^2}{GM_e} = \frac{37.549(10^{-9})\left[69.817(10^9)\right]^2}{66.73(10^{-12})(5.976)(10^{24})} = 0.459$$

Since $e < 1$, the satellite orbit is *elliptical* (Q.E.D.). $r = r_A$ at $\theta = 150°$, we obtain

$$\frac{1}{r} = C\cos\theta + \frac{GM_e}{h^2}$$

$$\frac{1}{r_A} = 37.549(10^{-9})\cos 150° + \frac{66.73(10^{-12})(5.976)(10^{24})}{\left[69.817(10^9)\right]^2}$$

$$r_A = 20.287(10^6)\text{ m}$$

Since h is constant,

$$r_A v_A = h$$

$$20.287(10^6)v_A = 69.817(10^9)$$

$$v_A = 3441.48\text{ m/s} = 3.44\text{ km/s}$$ **Ans.**

© 2010 Pearson Education, Inc., Upper Saddle River, NJ. All rights reserved. This material is protected under all copyright laws as they currently exist. No portion of this material may be reproduced, in any form or by any means, without permission in writing from the publisher.

***13–132.** The satellite is in an elliptical orbit having an eccentricity of $e = 0.15$. If its velocity at perigee is $v_P = 15\,\text{Mm/h}$, determine its velocity at apogee A and the period of the satellite.

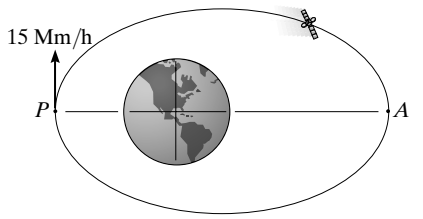

Here, $v_P = \left[15(10^6)\,\dfrac{\text{m}}{\text{h}}\right]\left(\dfrac{1\text{ h}}{3600\text{ s}}\right) = 4166.67\text{ m/s}.$

$$h = r_P v_P$$

$$h = r_P\,(4166.67) = 4166.67 r_p \qquad \textbf{(1)}$$

and

$$C = \frac{1}{r_P}\left(1 - \frac{GM_e}{r_P\,v_P{}^2}\right)$$

$$C = \frac{1}{r_p}\left[1 - \frac{66.73(10^{-12})(5.976)(10^{24})}{r_p(4166.67^2)}\right]$$

$$C = \frac{1}{r_P}\left[1 - \frac{22.97(10^6)}{r_P}\right] \qquad \textbf{(2)}$$

$$e = \frac{Ch^2}{GM_e}$$

$$0.15 = \frac{\dfrac{1}{r_P}\left[1 - \dfrac{22.97(10^6)}{r_P}\right](4166.67\,r_P)^2}{66.73(10^{-12})(5.976)(10^{24})}$$

$$r_P = 26.415(10^6)\text{ m}$$

Using the result of r_p

$$r_A = \frac{r_P}{\dfrac{2GM_e}{r_P\,v_P{}^2} - 1}$$

$$= \frac{26.415(10^6)}{\dfrac{2(66.73)(10^{-12})(5.976)(10^{24})}{26.415(10^6)(4166.67^2)} - 1}$$

$$= 35.738(10^6)\text{ m}$$

Since $h = r_P\,v_P = 26.415(10^6)(4166.67^2) = 110.06(10^9)\text{ m}^2/\text{s}$ is constant,

$$r_A\,v_A = h$$

$$35.738(10^6)v_A = 110.06(10^9)$$

$$v_A = 3079.71\text{ m/s} = 3.08\text{ km/s} \qquad \textbf{Ans.}$$

Using the results of h, r_A, and r_P,

$$T = \frac{\pi}{6}\left(r_P + r_A\right)\sqrt{r_P\,r_A}$$

$$= \frac{\pi}{110.06(10^9)}\left[26.415(10^6) + 35.738(10^6)\right]\sqrt{26.415(10^6)(35.738)(10^6)}$$

$$= 54\,508.43\text{ s} = 15.1\text{ hr} \qquad \textbf{Ans.}$$

© 2010 Pearson Education, Inc., Upper Saddle River, NJ. All rights reserved. This material is protected under all copyright laws as they currently exist. No portion of this material may be reproduced, in any form or by any means, without permission in writing from the publisher.

•13–133. The satellite is in an elliptical orbit. When it is at perigee P, its velocity is $v_P = 25\,\text{Mm/h}$, and when it reaches point A, its velocity is $v_A = 15\,\text{Mm/h}$ and its altitude above the earth's surface is 18 Mm. Determine the period of the satellite.

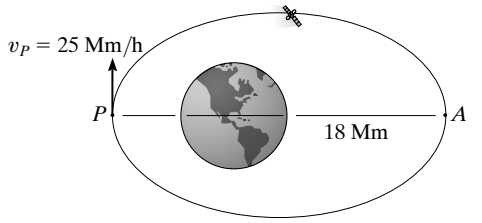

Here,

$$v_A = \left[15\left(10^6\right)\frac{\text{m}}{\text{h}}\right]\left(\frac{1\text{ h}}{3600\text{ s}}\right) = 4166.67\text{ m/s}$$

and

$$r_A = 18\left(10^6\right) + 6378\left(10^3\right) = 24.378\left(10^6\right)\text{ m}$$

$$h = r_A v_A\left[24.378\left(10^6\right)\right](4166.67) = 101.575\left(10^9\right)\text{ m}^2/\text{s}$$

Since h is constant and $v_P = \left[25\left(10^6\right)\frac{\text{m}}{\text{h}}\right]\left(\frac{1\text{ h}}{3600\text{ s}}\right) = 6944.44\text{ m/s}$,

$$r_P v_P = h$$

$$r_P(6944.44) = 101.575(10^9)$$

$$r_P = 14.6268(10^6)\text{ m}$$

Using the results of h, r_A, and r_P,

$$T = \frac{\pi}{6}\left(r_P + r_A\right)\sqrt{r_P r_A}$$

$$= \frac{\pi}{101.575\left(10^9\right)}\left[14.6268\left(10^6\right) + 24.378\left(10^6\right)\right]\sqrt{14.6268\left(10^6\right)(24.378)\left(10^6\right)}$$

$$= 430158.48\text{ s} = 119\text{ h}$$ **Ans.**

13–134. A satellite is launched with an initial velocity $v_0 = 4000$ km/h parallel to the surface of the earth. Determine the required altitude (or range of altitudes) above the earth's surface for launching if the free-flight trajectory is to be (a) circular, (b) parabolic, (c) elliptical, and (d) hyperbolic.

$$v_0 = \frac{4000(10^3)}{3600} = 1111\text{ m/s}$$

(a) For circular trajectory, $e = 0$

$$v_0 = \sqrt{\frac{GM_e}{r_0}} \qquad r_0 = \frac{GM_e}{v_0^2} = \frac{(66.73)(10^{-12})(5.976)(10^{24})}{(1111)^2} = 323(10^3)\text{ km}$$

$$r = r_0 - 6378\text{ km} = 317\left(10^3\right)\text{ km} = 317\text{ Mm}$$ **Ans.**

(b) For parabolic trajectory, $e = 1$

$$v_0 = \sqrt{\frac{2GM_e}{r_0}} \qquad r_0 = \frac{2GM_e}{v_0^2} = \frac{2(66.73)(10^{-12})(5.976)(10^{24})}{1111^2} = 646\left(10^3\right)\text{ km}$$

$$r = r_0 - 6378\text{ km} = 640\left(10^3\right)\text{ km} = 640\text{ Mm}$$ **Ans.**

(c) For elliptical trajectory, $e < 1$

$$317\text{ Mm} < r < 640\text{ Mm}$$ **Ans.**

(d) For hyperbolic trajectory, $e > 1$

$$r > 640\text{ Mm}$$ **Ans.**

© 2010 Pearson Education, Inc., Upper Saddle River, NJ. All rights reserved. This material is protected under all copyright laws as they currently exist. No portion of this material may be reproduced, in any form or by any means, without permission in writing from the publisher.

13–135. The rocket is in a free-flight elliptical orbit about the earth such that $e = 0.76$ as shown. Determine its speed when it is at point A. Also determine the sudden change in speed the rocket must experience at B in order to travel in free flight along the orbit indicated by the dashed path.

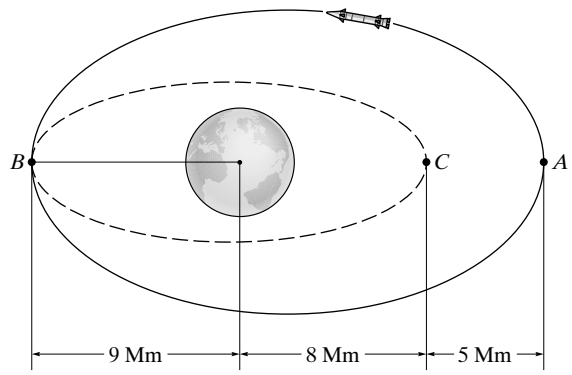

$$e = \frac{Ch^2}{GM_e} \qquad \text{where} \quad C = \frac{1}{r_0}\left(1 - \frac{GM_e}{r_0 v_0^2}\right) \text{ and } h = r_0 v_0$$

$$e = \frac{1}{GM_e r_0}\left(1 - \frac{GM_e}{r_0 v_0^2}\right)(r_0 v_0)^2$$

$$e = \left(\frac{r_0 v_0^2}{GM_e} - 1\right)$$

$$\frac{r_0 v_0^2}{GM_e} = e + 1 \qquad \text{or} \qquad \frac{GM_e}{r_0 v_0^2} = \frac{1}{e+1} \qquad \textbf{(1)}$$

$$r_a = \frac{r_0}{\dfrac{2GM_e}{r_0 v_0^2} - 1} \qquad \textbf{(2)}$$

Substituting Eq.(1) into (2) yields:

$$r_a = \frac{r_0}{2\left(\frac{1}{e+1}\right) - 1} = \frac{r_0(e+1)}{1-e} \qquad \textbf{(3)}$$

From Eq.(1),

$$\frac{GM_e}{r_0 v_0^2} = \frac{1}{e+1} \qquad v_0 = \sqrt{\frac{GM_e(e+1)}{r_0}}$$

$$v_B = v_0 = \sqrt{\frac{66.73(10^{-12})(5.976)(10^{24})(0.76+1)}{9(10^6)}} = 8831 \text{ m/s}$$

$$v_A = \frac{r_p}{r_a} v_B = \frac{9(10^6)}{13(10^6)}(8831) = 6113 \text{ m/s} = 6.11 \text{ km/s} \qquad \textbf{Ans.}$$

From Eq.(3),

$$r_a = \frac{r_0(e+1)}{1-e}$$

$$9(10)^6 = \frac{8(10^6)(e+1)}{1-e} \qquad e = 0.05882$$

From Eq. (1),

$$\frac{GM_e}{r_0 v_0^2} = \frac{1}{e+1} \qquad v_0 = \sqrt{\frac{GM_e(e+1)}{r_0}}$$

$$v_C = v_0 = \sqrt{\frac{66.73(10^{-12})(5.976)(10^{24})(0.05882+1)}{8(10^6)}} = 7265 \text{ m/s}$$

$$v_B = \frac{r_p}{r_a} v_C = \frac{8(10^6)}{9(10^6)}(7265) = 6458 \text{ m/s}$$

$$\Delta v_B = 6458 - 8831 = -2374 \text{ m/s} = -2.37 \text{ km/s} \qquad \textbf{Ans.}$$

© 2010 Pearson Education, Inc., Upper Saddle River, NJ. All rights reserved. This material is protected under all copyright laws as they currently exist. No portion of this material may be reproduced, in any form or by any means, without permission in writing from the publisher.

***13–136.** A communications satellite is in a circular orbit above the earth such that it always remains directly over a point on the earth's surface. As a result, the period of the satellite must equal the rotation of the earth, which is approximately 24 hours. Determine the satellite's altitude h above the earth's surface and its orbital speed.

The period of the satellite around the circular orbit of radius $r_0 = h + r_e = \left[h + 6.378(10^6)\right]$ m is given by

$$T = \frac{2\pi r_0}{v_s}$$

$$24(3600) = \frac{2\pi\left[h + 6.378(10^6)\right]}{v_s}$$

$$v_s = \frac{2\pi\left[h + 6.378(10^6)\right]}{86.4(10^3)} \qquad \textbf{(1)}$$

The velocity of the satellite orbiting around the circular orbit of radius $r_0 = h + r_e = \left[h + 6.378(10^6)\right]$ m is given by

$$v_S = \sqrt{\frac{GM_e}{r_0}}$$

$$v_S = \sqrt{\frac{66.73(10^{-12})(5.976)(10^{24})}{h + 6.378(10^6)}} \qquad \textbf{(2)}$$

Solving Eqs.(1) and (2),

$h = 35.87(10^6)$ m $= 35.9$ Mm $\qquad v_S = 3072.32$ m/s $= 3.07$ km/s **Ans.**

•13–137. Determine the constant speed of satellite S so that it circles the earth with an orbit of radius $r = 15$ Mm. *Hint:* Use Eq. 13–1.

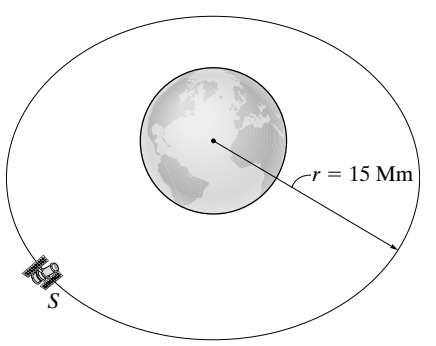

$$F = G\frac{m_s m_e}{r^2} \qquad \text{Also} \qquad F = m_s\left(\frac{v_s^2}{r}\right) \qquad \text{Hence}$$

$$m_s\left(\frac{v_0^2}{r}\right) = G\frac{m_s m_e}{r^2}$$

$$v = \sqrt{G\frac{m_e}{r}} = \sqrt{66.73(10^{-12})\left(\frac{5.976(10^{24})}{15(10^6)}\right)} = 5156 \text{ m/s} = 5.16 \text{ km/s} \qquad \textbf{Ans.}$$

© 2010 Pearson Education, Inc., Upper Saddle River, NJ. All rights reserved. This material is protected under all copyright laws as they currently exist. No portion of this material may be reproduced, in any form or by any means, without permission in writing from the publisher.

•14–1. A 1500-lb crate is pulled along the ground with a constant speed for a distance of 25 ft, using a cable that makes an angle of 15° with the horizontal. Determine the tension in the cable and the work done by this force. The coefficient of kinetic friction between the ground and the crate is $\mu_k = 0.55$.

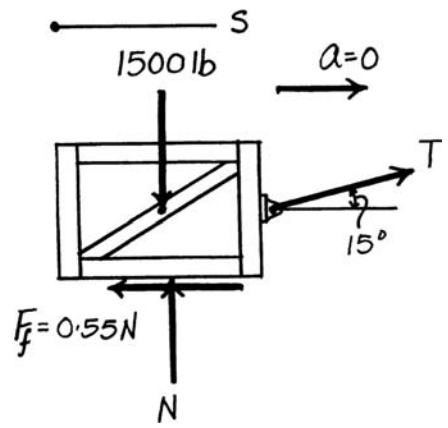

$\xrightarrow{+} \Sigma F_x = 0; \qquad T\cos 15° - 0.55N = 0$

$+\uparrow \Sigma F_y = 0; \qquad N + T\sin 15° - 1500 = 0$

$N = 1307 \text{ lb}$

$T = 744.4 \text{ lb} = 744 \text{ lb}$ **Ans.**

$U_T = (744.4 \cos 15°)(25) = 18.0\left(10^3\right) \text{ ft} \cdot \text{ lb}$ **Ans.**

14–2. The motion of a 6500-lb boat is arrested using a bumper which provides a resistance as shown in the graph. Determine the maximum distance the boat dents the bumper if its approaching speed is 3 ft/s.

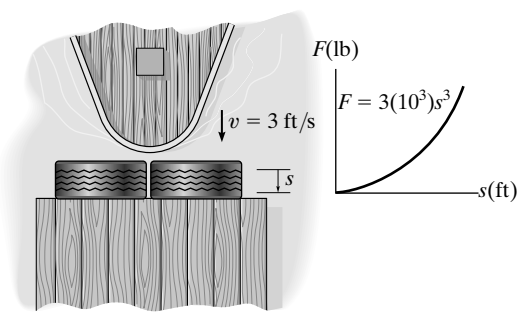

Principle of Work and Energy: Here, the bumper resisting force F does *negative* work since it acts in the opposite direction to that of displacement. Since the boat is required to stop, $T_2 = 0$. Applying Eq. 14–7, we have

$$T_1 + \sum U_{1-2} = T_2$$

$$\frac{1}{2}\left(\frac{6500}{32.2}\right)\left(3^2\right) + \left[-\int_0^s 3\left(10^3\right) s^3 ds\right] = 0$$

$$s = 1.05 \text{ ft}$$ **Ans.**

© 2010 Pearson Education, Inc., Upper Saddle River, NJ. All rights reserved. This material is protected under all copyright laws as they currently exist. No portion of this material may be reproduced, in any form or by any means, without permission in writing from the publisher.

14–3. The smooth plug has a weight of 20 lb and is pushed against a series of Belleville spring washers so that the compression in the spring is $s = 0.05$ ft. If the force of the spring on the plug is $F = (3s^{1/3})$ lb, where s is given in feet, determine the speed of the plug after it moves away from the spring. Neglect friction.

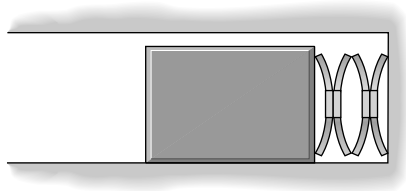

$$T_1 + \Sigma U_{1-2} = T_2$$

$$0 + \int_0^{0.05} 3s^{\frac{1}{3}}\, ds = \frac{1}{2}\left(\frac{20}{32.2}\right)v^2$$

$$3\left(\frac{3}{4}\right)(0.05)^{\frac{4}{3}} = \frac{1}{2}\left(\frac{20}{32.2}\right)v^2$$

$$v = 0.365 \text{ ft/s}$$ **Ans.**

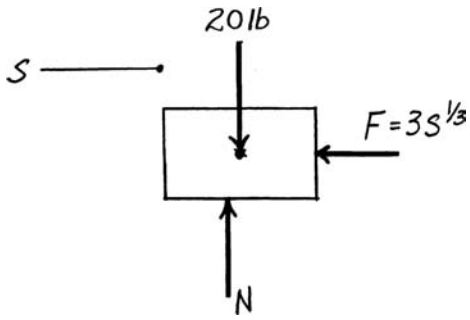

***14–4.** When a 7-kg projectile is fired from a cannon barrel that has a length of 2 m, the explosive force exerted on the projectile, while it is in the barrel, varies in the manner shown. Determine the approximate muzzle velocity of the projectile at the instant it leaves the barrel. Neglect the effects of friction inside the barrel and assume the barrel is horizontal.

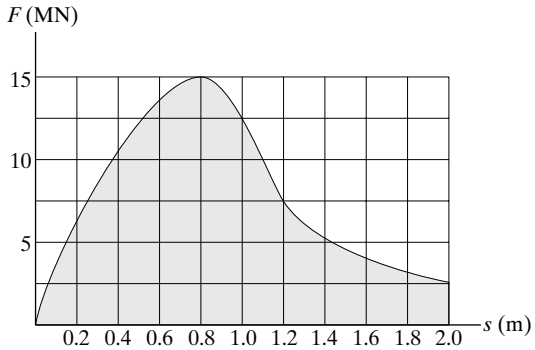

The work done is measured as the area under the force–displacement curve. This area is approximately 31.5 squares. Since each square has an area of $2.5\left(10^6\right)(0.2)$,

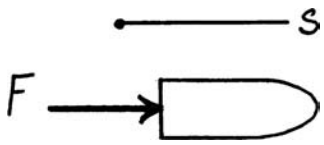

$$T_1 + \Sigma U_{1-2} = T_2$$

$$0 + \left[(31.5)(2.5)\left(10^6\right)(0.2)\right] = \frac{1}{2}(7)(v_2)^2$$

$$v_2 = 2121 \text{ m/s} = 2.12 \text{ km/s} \qquad \text{(approx.)}$$ **Ans.**

© 2010 Pearson Education, Inc., Upper Saddle River, NJ. All rights reserved. This material is protected under all copyright laws as they currently exist. No portion of this material may be reproduced, in any form or by any means, without permission in writing from the publisher.

•14–5. The 1.5-kg block slides along a smooth plane and strikes a *nonlinear spring* with a speed of $v = 4$ m/s. The spring is termed "nonlinear" because it has a resistance of $F_s = ks^2$, where $k = 900\ \text{N/m}^2$. Determine the speed of the block after it has compressed the spring $s = 0.2$ m.

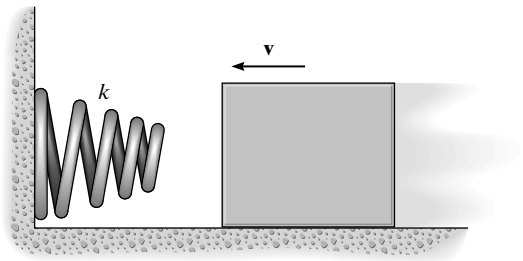

Principle of Work and Energy: The spring force F_{sp} which acts in the opposite direction to that of displacement does *negative* work. The normal reaction N and the weight of the block do not displace hence do no work. Applying Eq. 14–7, we have

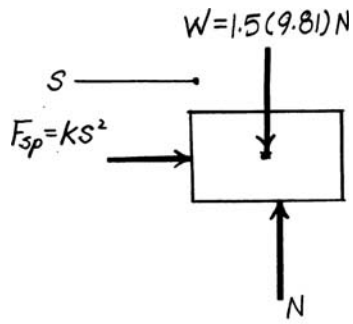

$$T_1 + \sum U_{1-2} = T_2$$

$$\frac{1}{2}(1.5)\left(4^2\right) + \left[-\int_0^{0.2\text{ m}} 900s^2\,ds\right] = \frac{1}{2}(1.5)\,v^2$$

$$v = 3.58\ \text{m/s} \qquad \textbf{Ans.}$$

14–6. When the driver applies the brakes of a light truck traveling 10 km/h, it skids 3 m before stopping. How far will the truck skid if it is traveling 80 km/h when the brakes are applied?

$$10\ \text{km/h} = \frac{10\left(10^3\right)}{3600} = 2.778\ \text{m/s} \qquad 80\ \text{km/h} = 22.22\ \text{m/s}$$

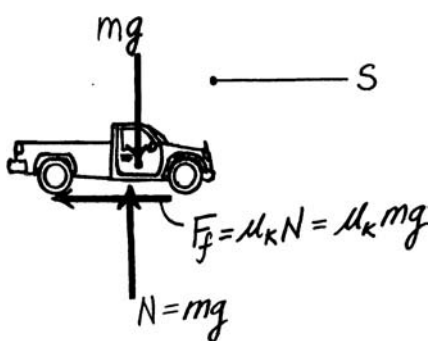

$$T_1 + \Sigma U_{1-2} = T_2$$

$$\frac{1}{2}m(2.778)^2 - \mu_k mg(3) = 0$$

$$\mu_k g = 1.286$$

$$T_1 + \Sigma U_{1-2} = T_2$$

$$\frac{1}{2}m(22.22)^2 - (1.286)m(d) = 0$$

$$d = 192\ \text{m} \qquad \textbf{Ans.}$$

© 2010 Pearson Education, Inc., Upper Saddle River, NJ. All rights reserved. This material is protected under all copyright laws as they currently exist. No portion of this material may be reproduced, in any form or by any means, without permission in writing from the publisher.

14–7. The 6-lb block is released from rest at A and slides down the smooth parabolic surface. Determine the maximum compression of the spring.

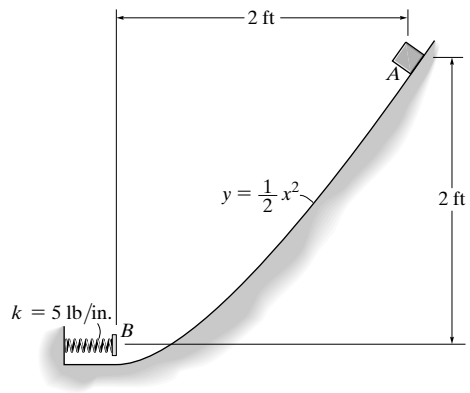

$$T_1 + \Sigma U_{1-2} = T_2$$

$$0 + 2(6) - \frac{1}{2}(5)(12)s^2 = 0$$

$$s = 0.632 \text{ ft} = 7.59 \text{ in.}$$ **Ans.**

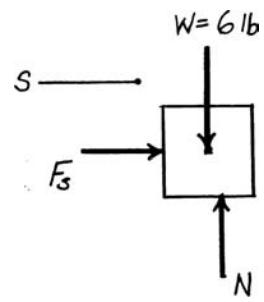

***14–8.** The spring in the toy gun has an unstretched length of 100 mm. It is compressed and locked in the position shown. When the trigger is pulled, the spring unstretches 12.5 mm, and the 20-g ball moves along the barrel. Determine the speed of the ball when it leaves the gun. Neglect friction.

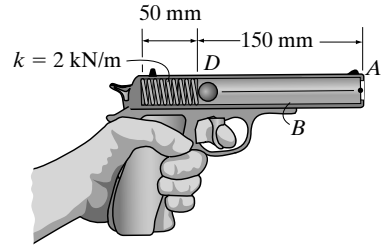

Principle of Work and Energy: Referring to the free-body diagram of the ball bearing shown in Fig. a, notice that $\mathbf{F}_{sp}$ does positive work. The spring has an initial and final compression of $s_1 = 0.1 - 0.05 = 0.05$ m and $s_2 = 0.1 - (0.05 + 0.0125) = 0.0375$ m.

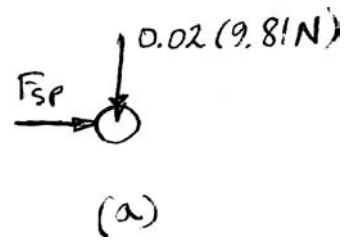

$$T_1 + \Sigma U_{1-2} = T_2$$

$$0 + \left[\frac{1}{2}ks_1{}^2 - \frac{1}{2}ks_2{}^2\right] = \frac{1}{2}mv_A{}^2$$

$$0 + \left[\frac{1}{2}(2000)(0.05)^2 - \frac{1}{2}(2000)(0.0375^2)\right] = \frac{1}{2}(0.02)v_A{}^2$$

$$v_A = 10.5 \text{ m/s}$$ **Ans.**

© 2010 Pearson Education, Inc., Upper Saddle River, NJ. All rights reserved. This material is protected under all copyright laws as they currently exist. No portion of this material may be reproduced, in any form or by any means, without permission in writing from the publisher.

•14–9. Springs AB and CD have a stiffness of $k = 300$ N/m and $k' = 200$ N/m, respectively, and both springs have an unstretched length of 600 mm. If the 2-kg smooth collar starts from rest when the springs are unstretched, determine the speed of the collar when it has moved 200 mm.

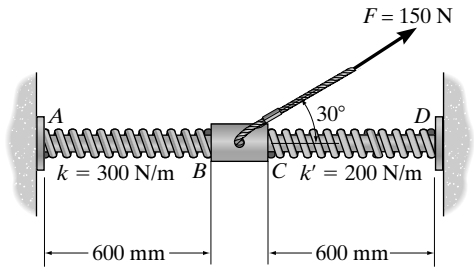

Principle of Work and Energy: By referring to the free-body diagram of the collar, notice that **W**, **N**, and $F_y = 150 \sin 30°$ do no work. However, $F_x = 150 \cos 30°$ N does positive work and $(\mathbf{F}_{sp})_{AB}$ and $(\mathbf{F}_{sp})_{CD}$ do negative work.

$$T_1 + \Sigma U_{1-2} = T_2$$

$$0 + 150 \cos 30°(0.2) + \left[-\frac{1}{2}(300)(0.2^2)\right] + \left[-\frac{1}{2}(200)(0.2^2)\right] = \frac{1}{2}(2)v^2$$

$$v = 4.00 \text{ m/s} \qquad \textbf{Ans.}$$

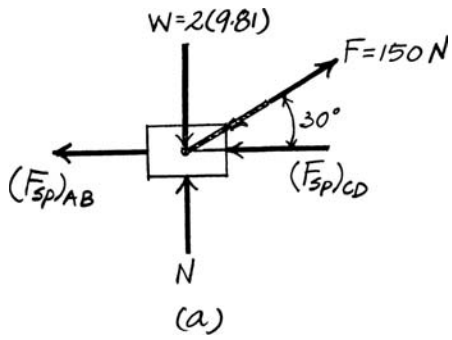

14–10. The 2-Mg car has a velocity of $v_1 = 100$ km/h when the driver sees an obstacle in front of the car. If it takes 0.75 s for him to react and lock the brakes, causing the car to skid, determine the distance the car travels before it stops. The coefficient of kinetic friction between the tires and the road is $\mu_k = 0.25$.

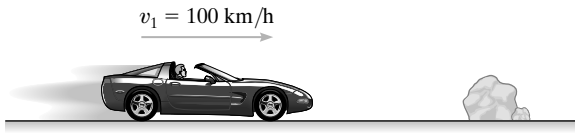

Free-Body Diagram: The normal reaction **N** on the car can be determined by writing the equation of motion along the y axis. By referring to the free-body diagram of the car, Fig. a,

$$+\uparrow \Sigma F_y = ma_y; \qquad N - 2000(9.81) = 2000(0) \qquad N = 19\,620 \text{ N}$$

Since the car skids, the frictional force acting on the car is $F_f = \mu_k N = 0.25(19620) = 4905N$.

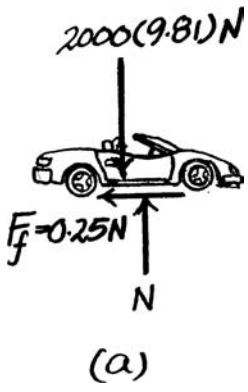

Principle of Work and Energy: By referring to Fig. a, notice that only $\mathbf{F}_f$ does work, which is negative. The initial speed of the car is $v_1 = \left[100(10^3)\frac{\text{m}}{\text{h}}\right]\left(\frac{1 \text{ h}}{3600 \text{ s}}\right) = 27.78$ m/s. Here, the skidding distance of the car is denoted as s'.

$$T_1 + \Sigma U_{1-2} = T_2$$

$$\frac{1}{2}(2000)(27.78^2) + (-4905s') = 0$$

$$s' = 157.31 \text{ m}$$

The distance traveled by the car during the reaction time is $s'' = v_1 t = 27.78(0.75) = 20.83$ m. Thus, the total distance traveled by the car before it stops is

$$s = s' + s'' = 157.31 + 20.83 = 178.14 \text{ m} = 178 \text{ m} \qquad \textbf{Ans.}$$

© 2010 Pearson Education, Inc., Upper Saddle River, NJ. All rights reserved. This material is protected under all copyright laws as they currently exist. No portion of this material may be reproduced, in any form or by any means, without permission in writing from the publisher.

14–11. The 2-Mg car has a velocity of $v_1 = 100\,\text{km/h}$ when the driver sees an obstacle in front of the car. It takes 0.75 s for him to react and lock the brakes, causing the car to skid. If the car stops when it has traveled a distance of 175 m, determine the coefficient of kinetic friction between the tires and the road.

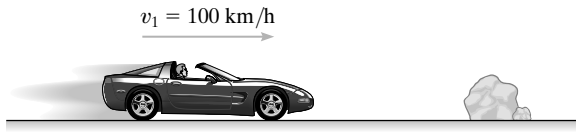

Free-Body Diagram: The normal reaction **N** on the car can be determined by writing the equation of motion along the y axis and referring to the free-body diagram of the car, Fig. a,

$$+\uparrow \Sigma F_y = ma_y; \qquad N - 2000(9.81) = 2000(0) \qquad N = 19\,620\text{ N}$$

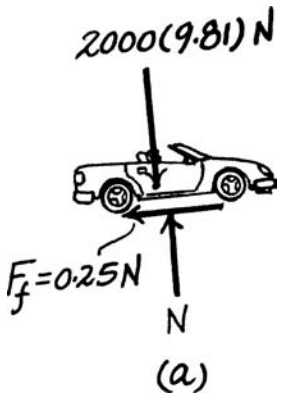

Since the car skids, the frictional force acting on the car can be computed from $F_f = \mu_k N = \mu_k(19\,620)$.

Principle of Work and Energy: By referring to Fig. a, notice that only $\mathbf{F}_f$ does work, which is negative. The initial speed of the car is $v_1 = \left[100(10^3)\,\frac{\text{m}}{\text{h}}\right]\left(\frac{1\text{ h}}{3600\text{ s}}\right) = 27.78\text{ m/s}$. Here, the skidding distance of the car is s'.

$$T_1 + \Sigma U_{1-2} = T_2$$

$$\frac{1}{2}(2000)(27.78^2) + \left[-\mu_k(19\,620)s'\right] = 0$$

$$s' = \frac{39.327}{\mu_k}$$

The distance traveled by the car during the reaction time is $s'' = v_1 t = 27.78(0.75) = 20.83\text{ m}$. Thus, the total distance traveled by the car before it stops is

$$s = s' + s''$$

$$175 = \frac{39.327}{\mu_k} + 20.83$$

$$\mu_k = 0.255 \qquad \textbf{Ans.}$$

© 2010 Pearson Education, Inc., Upper Saddle River, NJ. All rights reserved. This material is protected under all copyright laws as they currently exist. No portion of this material may be reproduced, in any form or by any means, without permission in writing from the publisher.

***14–12.** The 10-lb block is released from rest at A. Determine the compression of each of the springs after the block strikes the platform and is brought momentarily to rest. Initially both springs are unstretched. Assume the platform has a negligible mass.

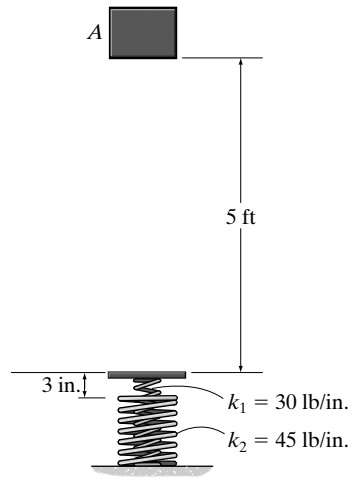

Free-Body Diagram: The free-body diagram of the block in contact with both springs is shown in Fig. a. When the block is brought momentarily to rest, springs (1) and (2) are compressed by $s_1 = y$ and $s_2 = (y - 3)$, respectively.

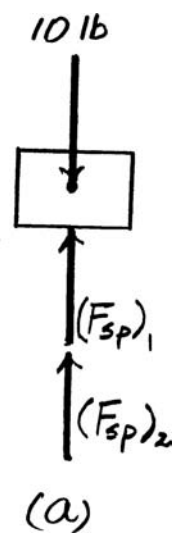

Principle of Work and Energy: When the block is momentarily at rest, **W** which displaces downward $h = [5(12) + y]\text{in.} = (60 + y)\text{in.}$, does positive work, whereas $(\mathbf{F}_{sp})_1$ and $(\mathbf{F}_{sp})_2$ both do negative work.

$$T_1 + \Sigma U_{1-2} = T_2$$

$$0 + 10(60 + y) + \left[-\frac{1}{2}(30)y^2\right] + \left[-\frac{1}{2}(45)(y - 3)^2\right] = 0$$

$$37.5y^2 - 145y - 397.5 = 0$$

Solving for the positive root of the above equation,

$$y = 5.720 \text{ in.}$$

Thus,

$$s_1 = 5.72 \text{ in.} \qquad s_2 = 5.720 - 3 = 2.72 \text{ in.} \qquad \textbf{Ans.}$$

© 2010 Pearson Education, Inc., Upper Saddle River, NJ. All rights reserved. This material is protected under all copyright laws as they currently exist. No portion of this material may be reproduced, in any form or by any means, without permission in writing from the publisher.

14–13. Determine the velocity of the 60-lb block A if the two blocks are released from rest and the 40-lb block B moves 2 ft up the incline. The coefficient of kinetic friction between both blocks and the inclined planes is $\mu_k = 0.10$.

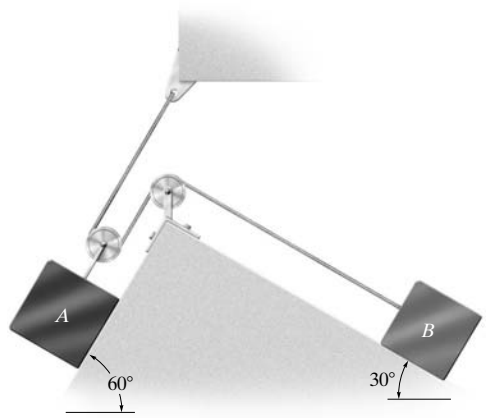

Block A:

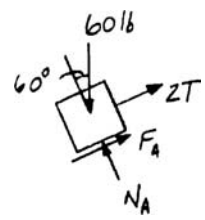

$+\nwarrow \Sigma F_y = ma_y;\qquad N_A - 60\cos 60° = 0$

$N_A = 30 \text{ lb}$

$F_A = 0.1(30) = 3 \text{ lb}$

Block B:

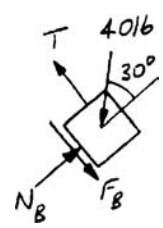

$+\nearrow \Sigma F_y = ma_y;\qquad N_B - 40\cos 30° = 0$

$N_B = 34.64 \text{ lb}$

$F_B = 0.1(34.64) = 3.464 \text{ lb}$

Use the system of both blocks. N_A, N_B, T, and R do no work.

$T_1 + \Sigma U_{1-2} = T_2$

$$(0 + 0) + 60\sin 60°|\Delta s_A| - 40\sin 30°|\Delta s_B| - 3|\Delta s_A| - 3.464|\Delta s_B| = \frac{1}{2}\left(\frac{60}{32.2}\right)v_A^2 + \frac{1}{2}\left(\frac{40}{32.2}\right)v_B^2$$

$2s_A + s_B = l$

$2\Delta s_A = -\Delta s_B$

When $|\Delta s_B| = 2 \text{ ft}, |\Delta s_A| = 1 \text{ ft}$

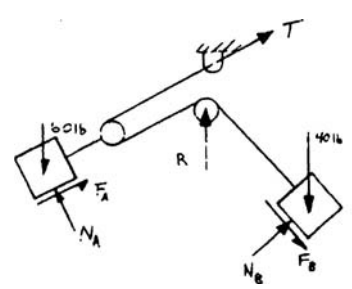

Also,

$2v_A = -v_B$

Substituting and solving,

$v_A = 0.771 \text{ ft/s}$ **Ans.**

$v_B = -1.54 \text{ ft/s}$

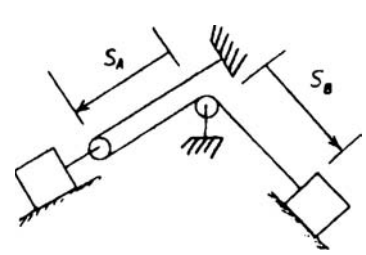

© 2010 Pearson Education, Inc., Upper Saddle River, NJ. All rights reserved. This material is protected under all copyright laws as they currently exist. No portion of this material may be reproduced, in any form or by any means, without permission in writing from the publisher.

14–14. The force **F**, acting in a constant direction on the 20-kg block, has a magnitude which varies with the position s of the block. Determine how far the block slides before its velocity becomes 5 m/s. When $s = 0$ the block is moving to the right at 2 m/s. The coefficient of kinetic friction between the block and surface is $\mu_k = 0.3$.

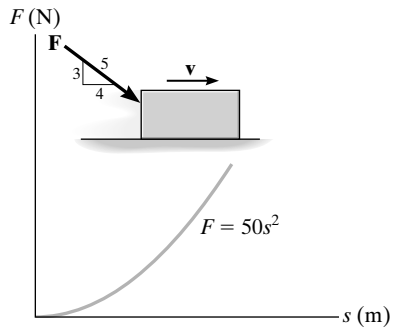

$+\uparrow \Sigma F_y = 0;$ $\quad N_B - 20(9.81) - \frac{3}{5}(50\,s^2) = 0$

$$N_B = 196.2 + 30\,s^2$$

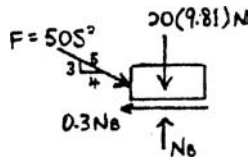

$T_1 + \Sigma U_{1-2} = T_2$

$$\frac{1}{2}(20)(2)^2 + \frac{4}{5}\int_0^s 50\,s^2\,ds - 0.3(196.2)(s) - 0.3\int_0^s 30\,s^2\,ds = \frac{1}{2}(20)\,(5)^2$$

$$40 + 13.33\,s^3 - 58.86\,s - 3\,s^3 = 250$$

$$s^3 - 5.6961\,s - 20.323 = 0$$

Solving for the real root yields

$s = 3.41$ m **Ans.**

14–15. The force **F**, acting in a constant direction on the 20-kg block, has a magnitude which varies with position s of the block. Determine the speed of the block after it slides 3 m. When $s = 0$ the block is moving to the right at 2 m/s. The coefficient of kinetic friction between the block and surface is $\mu_k = 0.3$.

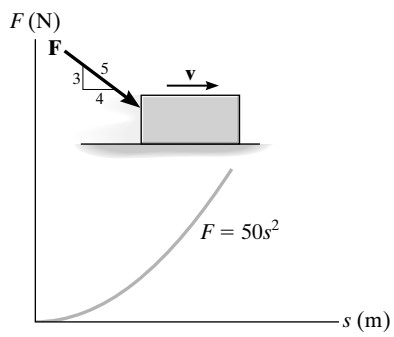

$+\uparrow \Sigma F_y = 0;$ $\quad N_B - 20(9.81) - \frac{3}{5}(50\,s^2) = 0$

$$N_B = 196.2 + 30\,s^2$$

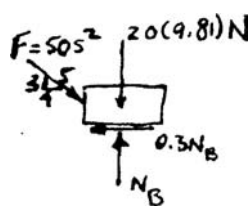

$T_1 + \Sigma U_{1-2} = T_2$

$$\frac{1}{2}(20)(2)^2 + \frac{4}{5}\int_0^3 50\,s^2\,ds - 0.3(196.2)(3) - 0.3\int_0^3 30\,s^2\,ds = \frac{1}{2}(20)\,(v)^2$$

$$40 + 360 - 176.58 - 81 = 10\,v^2$$

$v = 3.77$ m/s **Ans.**

© 2010 Pearson Education, Inc., Upper Saddle River, NJ. All rights reserved. This material is protected under all copyright laws as they currently exist. No portion of this material may be reproduced, in any form or by any means, without permission in writing from the publisher.

14–16. A rocket of mass m is fired vertically from the surface of the earth, i.e., at $r = r_1$. Assuming no mass is lost as it travels upward, determine the work it must do against gravity to reach a distance r_2. The force of gravity is $F = GM_e m/r^2$ (Eq. 13–1), where M_e is the mass of the earth and r the distance between the rocket and the center of the earth.

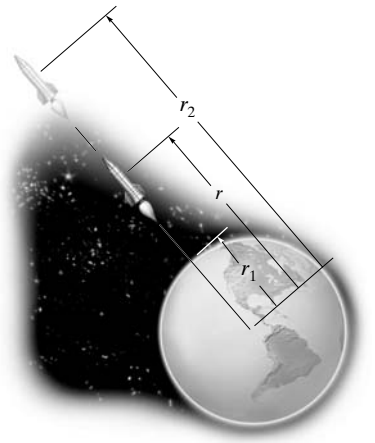

$$F = G\frac{M_e m}{r^2}$$

$$F_{1-2} = \int F\,dr = GM_e m\int_{r_1}^{r_2}\frac{dr}{r^2}$$

$$= GM_e m\left(\frac{1}{r_1} - \frac{1}{r_2}\right) \qquad \textbf{Ans.}$$

•14–17. The cylinder has a weight of 20 lb and is pushed against a series of Belleville spring washers so that the compression in the spring is $s = 0.05$ ft. If the force of the spring on the cylinder is $F = (100s^{1/3})$ lb, where s is given in feet, determine the speed of the cylinder just after it moves away from the spring, i.e., at $s = 0$.

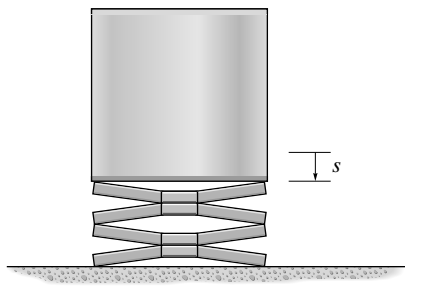

Principle of Work and Energy: The spring force which acts in the direction of displacement does *positive* work, whereas the weight of the block does *negative* work since it acts in the opposite direction to that of displacement. Since the block is initially at rest, $T_1 = 0$. Applying Eq. 14–7, we have

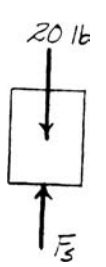

$$T_1 + \sum U_{1-2} = T_2$$

$$0 + \int_0^{0.05\text{ ft}} 100s^{1/3}\,ds - 20(0.05) = \frac{1}{2}\left(\frac{20}{32.2}\right)v^2$$

$$v = 1.11\text{ ft/s} \qquad \textbf{Ans.}$$

© 2010 Pearson Education, Inc., Upper Saddle River, NJ. All rights reserved. This material is protected under all copyright laws as they currently exist. No portion of this material may be reproduced, in any form or by any means, without permission in writing from the publisher.

14–18. The collar has a mass of 20 kg and rests on the smooth rod. Two springs are attached to it and the ends of the rod as shown. Each spring has an uncompressed length of 1 m. If the collar is displaced $s = 0.5$ m and released from rest, determine its velocity at the instant it returns to the point $s = 0$.

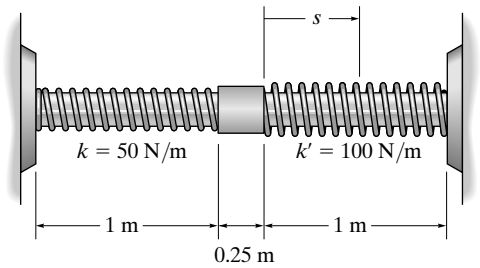

$$T_1 + \Sigma U_{1-2} = T_2$$

$$0 + \frac{1}{2}(50)(0.5)^2 + \frac{1}{2}(100)(0.5)^2 = \frac{1}{2}(20)v_C^2$$

$$v_C = 1.37 \text{ m/s} \qquad \textbf{Ans.}$$

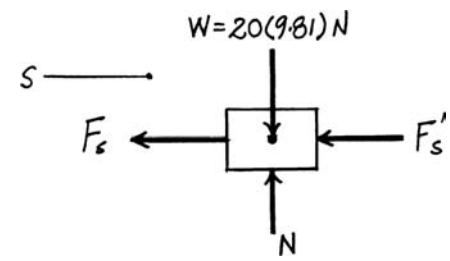

14–19. Determine the height h of the incline D to which the 200-kg roller coaster car will reach, if it is launched at B with a speed just sufficient for it to round the top of the loop at C without leaving the track. The radius of curvature at C is $\rho_c = 25$ m.

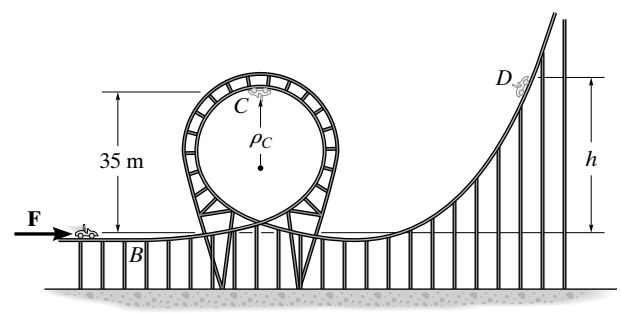

Equations of Motion: Here, it is required that $N = 0$. Applying Eq. 13–8 to FBD(a), we have

$$\Sigma F_n = ma_n; \qquad 200(9.81) = 200\left(\frac{v_C^2}{25}\right) \qquad v_C^2 = 245.25 \text{ m}^2/\text{s}^2$$

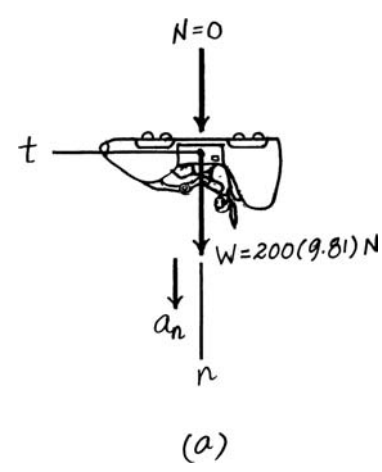

Principle of Work and Energy: The weight of the roller coaster car and passengers do *negative* work since they act in the opposite direction to that of displacement. When the roller coaster car travels from B to C, applying Eq. 14–7, we have

$$T_B + \sum U_{B-C} = T_C$$

$$\frac{1}{2}(200)\, v_B^2 - 200(9.81)\,(35) = \frac{1}{2}(200)(245.25)$$

$$v_B = 30.53 \text{ m/s}$$

When the roller coaster car travels from B to D, it is required that the car stops at D, hence $T_D = 0$.

$$T_B + \sum U_{B-D} = T_D$$

$$\frac{1}{2}(200)\left(30.53^2\right) - 200(9.81)(h) = 0$$

$$h = 47.5 \text{ m} \qquad \textbf{Ans.}$$

© 2010 Pearson Education, Inc., Upper Saddle River, NJ. All rights reserved. This material is protected under all copyright laws as they currently exist. No portion of this material may be reproduced, in any form or by any means, without permission in writing from the publisher.

***14–20.** Packages having a weight of 15 lb are transferred horizontally from one conveyor to the next using a ramp for which $\mu_k = 0.15$. The top conveyor is moving at 6 ft/s and the packages are spaced 3 ft apart. Determine the required speed of the bottom conveyor so no sliding occurs when the packages come horizontally in contact with it. What is the spacing s between the packages on the bottom conveyor?

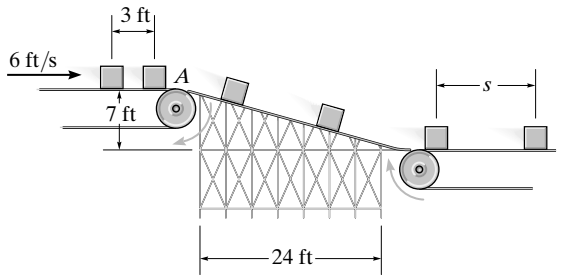

Equations of Motion:

$$+\Sigma F_{y'} = ma_{y'}; \qquad N - 15\left(\frac{24}{25}\right) = \frac{15}{32.2}(0) \qquad N = 14.4 \text{ lb}$$

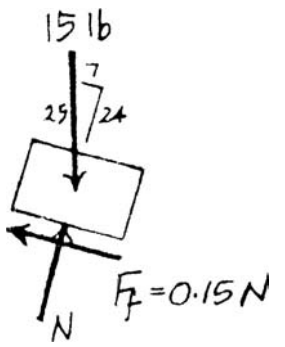

Principle of Work and Energy: Only force components parallel to the inclined plane which are in the direction of displacement [15(7/25) lb and $F_f = \mu_k N = 0.15(14.4) = 2.16$ lb] do work, whereas the force components perpendicular to the inclined plane [15(24/25) lb and normal reaction N] do no work since no displacement occurs in this direction. Here, the 15(7/25) lb force does *positive* work and $F_f = 2.16$ lb does *negative* work. Slipping at the contact surface between the package and the belt will not occur if the speed of belt is the same as the speed of the package at B. Applying Eq. 14–7, we have

$$T_1 + \sum U_{1-2} = T_2$$

$$\frac{1}{2}\left(\frac{15}{32.2}\right)(6^2) + 15\left(\frac{7}{25}\right)(25) - 2.16(25) = \frac{1}{2}\left(\frac{15}{32.2}\right)v^2$$

$$v = 15.97 \text{ ft/s} = 16.0 \text{ ft/s} \qquad \textbf{Ans.}$$

The time between two succesive packages to reach point B is $t = \frac{3}{6} = 0.5$ s. Hence, the distance between two succesive packages on the lower belt is

$$s = vt = 15.97(0.5) = 7.98 \text{ ft} \qquad \textbf{Ans.}$$

•14–21. The 0.5-kg ball of negligible size is fired up the smooth vertical circular track using the spring plunger. The plunger keeps the spring compressed 0.08 m when $s = 0$. Determine how far s it must be pulled back and released so that the ball will begin to leave the track when $\theta = 135°$.

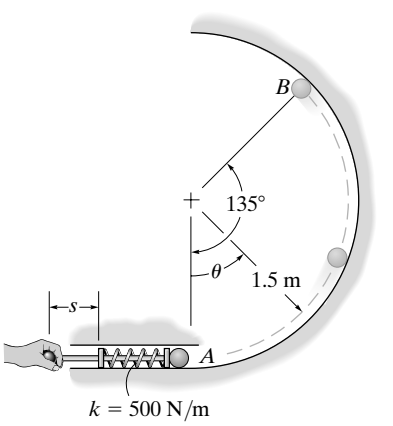

Equations of Motion:

$$\Sigma F_n = ma_n; \qquad 0.5(9.81)\cos 45° = 0.5\left(\frac{v_B^2}{1.5}\right) \qquad v_B^2 = 10.41 \text{ m}^2/\text{s}^2$$

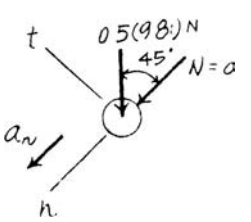

Principle of Work and Energy: Here, the weight of the ball is being displaced vertically by $s = 1.5 + 1.5\sin 45° = 2.561$ m and so it does *negative* work. The spring force, given by $F_{sp} = 500(s + 0.08)$, does positive work. Since the ball is at rest initially, $T_1 = 0$. Applying Eq. 14–7, we have

$$T_A + \sum U_{A-B} = T_B$$

$$0 + \int_0^s 500(s + 0.08)\,ds - 0.5(9.81)(2.561) = \frac{1}{2}(0.5)(10.41)$$

$$s = 0.1789 \text{ m} = 179 \text{ mm} \qquad \textbf{Ans.}$$

© 2010 Pearson Education, Inc., Upper Saddle River, NJ. All rights reserved. This material is protected under all copyright laws as they currently exist. No portion of this material may be reproduced, in any form or by any means, without permission in writing from the publisher.

14–22. The 2-lb box slides on the smooth circular ramp. If the box has a velocity of 30 ft/s at A, determine the velocity of the box and normal force acting on the ramp when the box is located at B and C. Assume the radius of curvature of the path at C is still 5 ft.

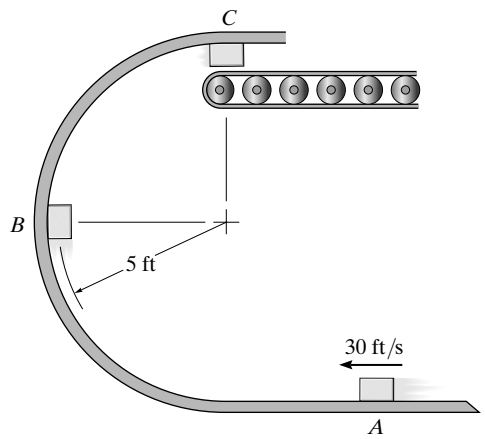

Point B:

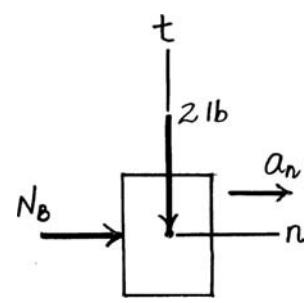

$T_1 + \Sigma U_{1-2} = T_2$

$$\frac{1}{2}\left(\frac{2}{32.2}\right)(30)^2 - 2(5) = \frac{1}{2}\left(\frac{2}{32.2}\right)(v_B)^2$$

$v_B = 24.0$ ft/s **Ans.**

$$\rightarrow \Sigma F_n = ma_n; \qquad N_B = \left(\frac{2}{32.2}\right)\left(\frac{(24.0)^2}{5}\right)$$

$N_B = 7.18$ lb **Ans.**

Point C:

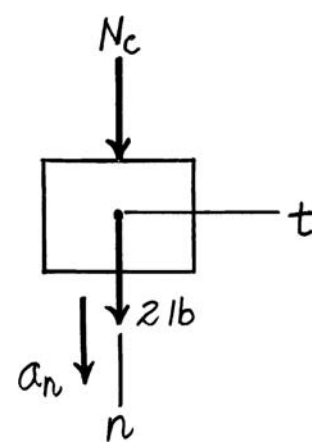

$T_1 + \Sigma U_{1-2} = T_2$

$$\frac{1}{2}\left(\frac{2}{32.2}\right)(30)^2 - 2(10) = \frac{1}{2}\left(\frac{2}{32.2}\right)(v_C)^2$$

$v_C = 16.0$ ft/s **Ans.**

$$+\downarrow \Sigma F_n = ma_n; \qquad N_C + 2 = \left(\frac{2}{32.2}\right)\left(\frac{(16.0)^2}{5}\right)$$

$N_C = 1.18$ lb **Ans.**

© 2010 Pearson Education, Inc., Upper Saddle River, NJ. All rights reserved. This material is protected under all copyright laws as they currently exist. No portion of this material may be reproduced, in any form or by any means, without permission in writing from the publisher.

14–23. Packages having a weight of 50 lb are delivered to the chute at $v_A = 3$ ft/s using a conveyor belt. Determine their speeds when they reach points B, C, and D. Also calculate the normal force of the chute on the packages at B and C. Neglect friction and the size of the packages.

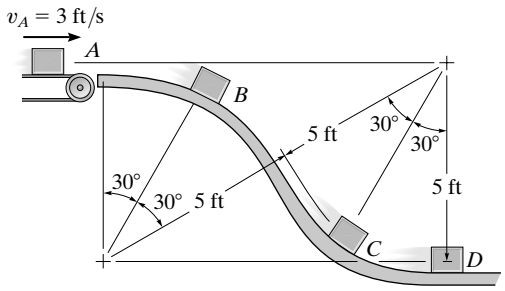

$$T_A + \Sigma U_{A-B} = T_B$$

$$\frac{1}{2}\left(\frac{50}{32.2}\right)(3)^2 + 50(5)(1 - \cos 30°) = \frac{1}{2}\left(\frac{50}{32.2}\right)v_B^2$$

$$v_B = 7.221 = 7.22 \text{ ft/s} \qquad \textbf{Ans.}$$

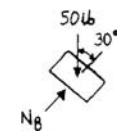

$$+\swarrow \Sigma F_n = ma_n; \qquad -N_B + 50 \cos 30° = \left(\frac{50}{32.2}\right)\left[\frac{(7.221)^2}{5}\right]$$

$$N_B = 27.1 \text{ lb} \qquad \textbf{Ans.}$$

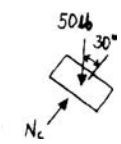

$$T_A + \Sigma U_{A-C} = T_C$$

$$\frac{1}{2}\left(\frac{50}{32.2}\right)(3)^2 + 50(5 \cos 30°) = \frac{1}{2}\left(\frac{50}{32.2}\right)v_C^2$$

$$v_C = 16.97 = 17.0 \text{ ft/s} \qquad \textbf{Ans.}$$

$$+\nearrow \Sigma F_n = ma_n; \qquad N_C - 50 \cos 30° = \left(\frac{50}{32.2}\right)\left[\frac{(16.97)^2}{5}\right]$$

$$N_C = 133 \text{ lb} \qquad \textbf{Ans.}$$

$$T_A + \Sigma U_{A-D} = T_D$$

$$\frac{1}{2}\left(\frac{50}{32.2}\right)(3)^2 + 50(5) = \frac{1}{2}\left(\frac{50}{32.2}\right)v_D^2$$

$$v_D = 18.2 \text{ ft/s} \qquad \textbf{Ans.}$$

© 2010 Pearson Education, Inc., Upper Saddle River, NJ. All rights reserved. This material is protected under all copyright laws as they currently exist. No portion of this material may be reproduced, in any form or by any means, without permission in writing from the publisher.

***14–24.** The 2-lb block slides down the smooth parabolic surface, such that when it is at A it has a speed of 10 ft/s. Determine the magnitude of the block's velocity and acceleration when it reaches point B, and the maximum height y_{max} reached by the block.

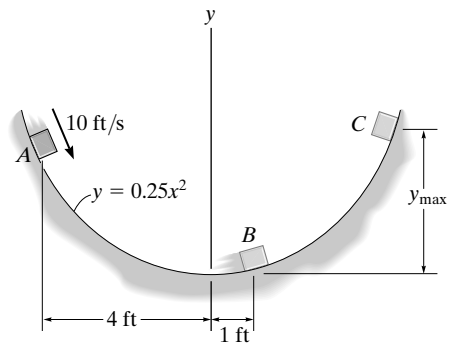

$$y = 0.25x^2$$

$$y_A = 0.25(-4)^2 = 4 \text{ ft}$$

$$y_B = 0.25(1)^2 = 0.25 \text{ ft}$$

$$T_A + \Sigma U_{A-B} = T_B$$

$$\frac{1}{2}\left(\frac{2}{32.2}\right)(10)^2 + 2(4-0.25) = \frac{1}{2}\left(\frac{2}{32.2}\right)v_B^2$$

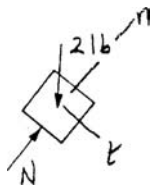

$$v_B = 18.48 \text{ ft/s} = 18.5 \text{ ft/s}$$ **Ans.**

$$\frac{dy}{dx} = \tan\theta = 0.5x\Big|_{x=1} = 0.5 \qquad \theta = 26.565°$$

$$\frac{d^2y}{dx^2} = 0.5$$

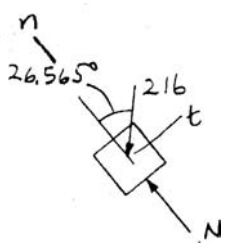

$$+\nearrow \Sigma F_t = ma_t; \qquad -2\sin 26.565° = \left(\frac{2}{32.2}\right)a_t$$

$$a_t = -14.4 \text{ ft/s}^2$$

$$\rho = \frac{\left[1 + \left(\frac{dy}{dx}\right)^2\right]^{\frac{1}{2}}}{\left|\frac{d^2y}{dx^2}\right|} = \frac{\left[1 + (0.5)^2\right]^{\frac{3}{2}}}{|0.5|} = 2.795 \text{ ft}$$

$$a_n = \frac{v_B^2}{\rho} = \frac{(18.48)^2}{2.795} = 122.2 \text{ ft/s}^2$$

$$a_B = \sqrt{(-14.4)^2 + (122.2)^2} = 123 \text{ ft/s}^2$$ **Ans.**

$$T_A + \Sigma U_{A-C} = T_C$$

$$\frac{1}{2}\left(\frac{2}{32.2}\right)(10)^2 - 2(y_{max} - 4) = 0 \qquad y_{max} = 5.55 \text{ ft}$$ **Ans.**

© 2010 Pearson Education, Inc., Upper Saddle River, NJ. All rights reserved. This material is protected under all copyright laws as they currently exist. No portion of this material may be reproduced, in any form or by any means, without permission in writing from the publisher.

•14–25. The skier starts from rest at A and travels down the ramp. If friction and air resistance can be neglected, determine his speed v_B when he reaches B. Also, find the distance s to where he strikes the ground at C, if he makes the jump traveling horizontally at B. Neglect the skier's size. He has a mass of 70 kg.

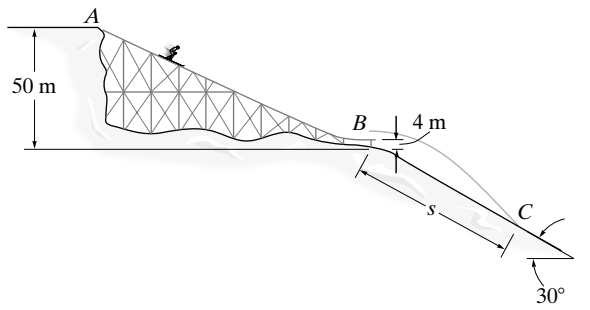

$$T_A + \Sigma U_{A-B} = T_B$$

$$0 + 70(9.81)(46) = \frac{1}{2}(70)(v_B)^2$$

$$v_B = 30.04 \text{ m/s} = 30.0 \text{ m/s}$$ **Ans.**

$(\overset{+}{\rightarrow})$ $\quad s = s_0 + v_0 t$

$$s \cos 30° = 0 + 30.04t$$

$(+\downarrow)$ $\quad s = s_0 + v_0 t + \frac{1}{2}a_c t^2$

$$s \sin 30° + 4 = 0 + 0 + \frac{1}{2}(9.81)t^2$$

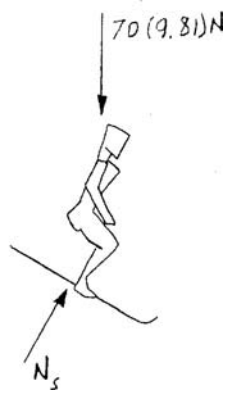

Eliminating t,

$$s^2 - 122.67s - 981.33 = 0$$

Solving for the positive root

$$s = 130 \text{ m}$$ **Ans.**

14–26. The crate, which has a mass of 100 kg, is subjected to the action of the two forces. If it is originally at rest, determine the distance it slides in order to attain a speed of 6 m/s. The coefficient of kinetic friction between the crate and the surface is $\mu_k = 0.2$.

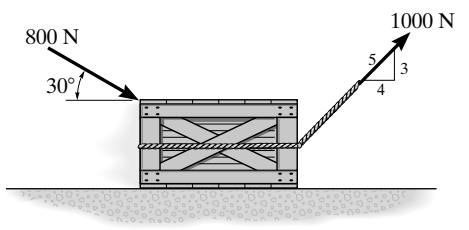

Equations of Motion: Since the crate slides, the friction force developed between the crate and its contact surface is $F_f = \mu_k N = 0.2N$. Applying Eq. 13–7, we have

$$+\uparrow \Sigma F_y = ma_y; \qquad N + 1000\left(\frac{3}{5}\right) - 800 \sin 30° - 100(9.81) = 100(0)$$

$$N = 781 \text{ N}$$

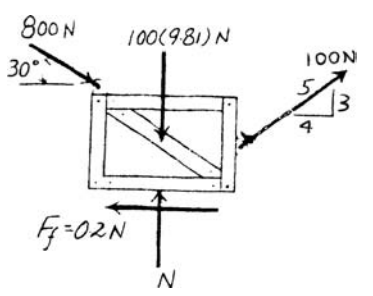

Principle of Work and Energy: The horizontal components of force 800 N and 1000 N which act in the direction of displacement do *positive* work, whereas the friction force $F_f = 0.2(781) = 156.2$ N does *negative* work since it acts in the opposite direction to that of displacement. The normal reaction N, the vertical component of 800 N and 1000 N force and the weight of the crate do not displace, hence they do no work. Since the crate is originally at rest, $T_1 = 0$. Applying Eq. 14–7, we have

$$T_1 + \sum U_{1-2} = T_2$$

$$0 + 800 \cos 30°(s) + 1000\left(\frac{4}{5}\right)s - 156.2s = \frac{1}{2}(100)\left(6^2\right)$$

$$s = 1.35\text{m}$$ **Ans.**

© 2010 Pearson Education, Inc., Upper Saddle River, NJ. All rights reserved. This material is protected under all copyright laws as they currently exist. No portion of this material may be reproduced, in any form or by any means, without permission in writing from the publisher.

14–27. The 2-lb brick slides down a smooth roof, such that when it is at A it has a velocity of 5 ft/s. Determine the speed of the brick just before it leaves the surface at B, the distance d from the wall to where it strikes the ground, and the speed at which it hits the ground.

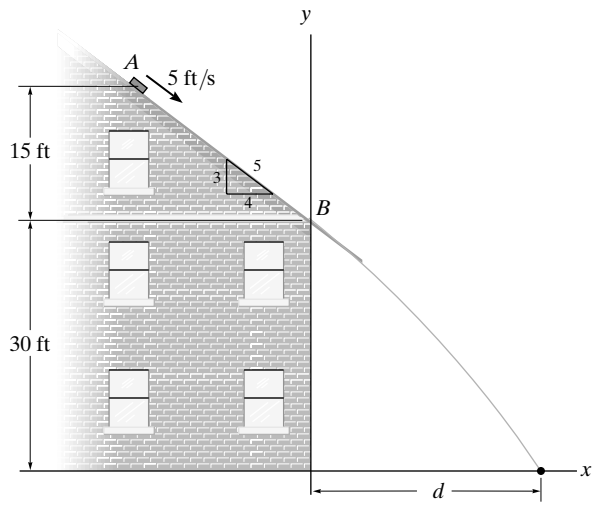

$$T_A + \Sigma U_{A-B} = T_B$$

$$\frac{1}{2}\left(\frac{2}{32.2}\right)(5)^2 + 2(15) = \frac{1}{2}\left(\frac{2}{32.2}\right)v_B^2$$

$$v_B = 31.48 \text{ ft/s} = 31.5 \text{ ft/s}$$ **Ans.**

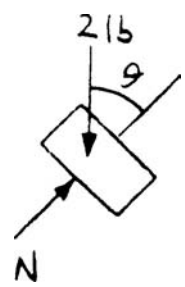

$$\left(\overset{+}{\rightarrow}\right) \qquad s = s_0 + v_0 t$$

$$d = 0 + 31.48\left(\frac{4}{5}\right)t$$

$$\left(+\downarrow\right) \qquad s = s_0 + v_0 t - \frac{1}{2}a_c t^2$$

$$30 = 0 + 31.48\left(\frac{3}{5}\right)t + \frac{1}{2}(32.2)t^2$$

$$16.1t^2 + 18.888t - 30 = 0$$

Solving for the positive root,

$$t = 0.89916 \text{ s}$$

$$d = 31.48\left(\frac{4}{5}\right)(0.89916) = 22.6 \text{ ft}$$ **Ans.**

$$T_A + \Sigma U_{A-C} = T_C$$

$$\frac{1}{2}\left(\frac{2}{32.2}\right)(5)^2 + 2(45) = \frac{1}{2}\left(\frac{2}{32.2}\right)v_C^2$$

$$v_C = 54.1 \text{ ft/s}$$ **Ans.**

© 2010 Pearson Education, Inc., Upper Saddle River, NJ. All rights reserved. This material is protected under all copyright laws as they currently exist. No portion of this material may be reproduced, in any form or by any means, without permission in writing from the publisher.

***14–28.** Roller coasters are designed so that riders will not experience a normal force that is more than 3.5 times their weight against the seat of the car. Determine the smallest radius of curvature ρ of the track at its lowest point if the car has a speed of 5 ft/s at the crest of the drop. Neglect friction.

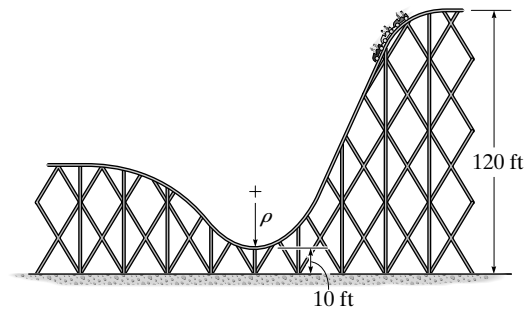

Principle of Work and Energy: Here, the rider is being displaced vertically (downward) by $s = 120 - 10 = 110$ ft and does *positive* work. Applying Eq. 14–7 we have

$$T_1 + \sum U_{1-2} = T_2$$

$$\frac{1}{2}\left(\frac{W}{32.2}\right)(5^2) + W(110) = \frac{1}{2}\left(\frac{W}{32.2}\right)v^2$$

$$v^2 = 7109 \text{ ft}^2/\text{s}^2$$

Equations of Motion: It is required that $N = 3.5W$. Applying Eq. 13–7, we have

$$\Sigma F_n = ma_n; \qquad 3.5W - W = \left(\frac{W}{32.2}\right)\left(\frac{7109}{\rho}\right)$$

$$\rho = 88.3 \text{ ft} \qquad \textbf{Ans.}$$

•14–29. The 120-lb man acts as a human cannonball by being "fired" from the spring-loaded cannon shown. If the greatest acceleration he can experience is $a = 10g = 322$ ft/s^2, determine the required stiffness of the spring which is compressed 2 ft at the moment of firing. With what velocity will he exit the cannon barrel, $d = 8$ ft, when the cannon is fired? When the spring is compressed $s = 2$ ft then $d = 8$ ft. Neglect friction and assume the man holds himself in a rigid position throughout the motion.

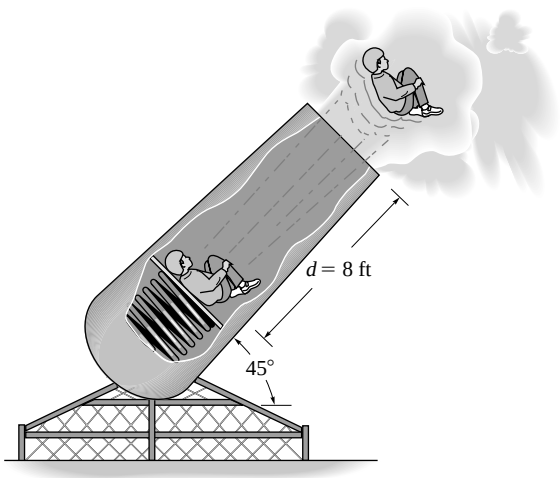

Initial acceleration is $10g = 322$ ft/s^2

$$+\nearrow \Sigma F_x = ma_x; \qquad F_s - 120 \sin 45° = \left(\frac{120}{32.2}\right)(322), \qquad F_s = 1284.85 \text{ lb}$$

For $s = 2$ ft; $\quad 1284\ 85 = k(2) \quad k = 642.4 = 642$ lb/ft **Ans.**

$$T_1 + \Sigma U_{1-2} = T_2$$

$$0 + \left[\frac{1}{2}(642.2)(2)^2 - 120(8)\sin 45°\right] = \frac{1}{2}\left(\frac{120}{32.2}\right)v_2^2$$

$v_2 = 18.0$ ft/s **Ans.**

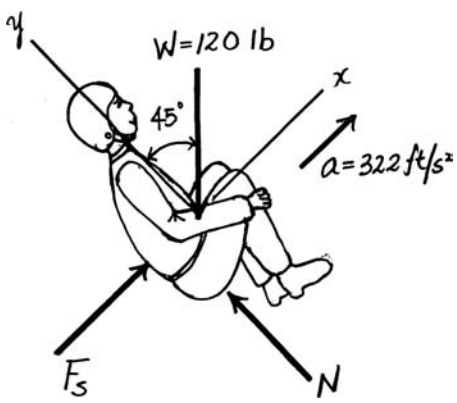

© 2010 Pearson Education, Inc., Upper Saddle River, NJ. All rights reserved. This material is protected under all copyright laws as they currently exist. No portion of this material may be reproduced, in any form or by any means, without permission in writing from the publisher.

14–30. If the track is to be designed so that the passengers of the roller coaster do not experience a normal force equal to zero or more than 4 times their weight, determine the limiting heights h_A and h_C so that this does not occur. The roller coaster starts from rest at position A. Neglect friction.

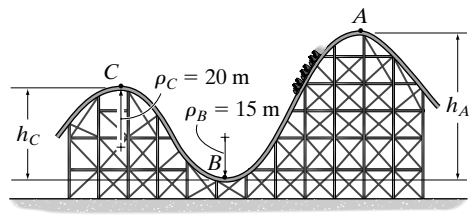

Free-Body Diagram: The free-body diagram of the passenger at positions B and C are shown in Figs. a and b, respectively.

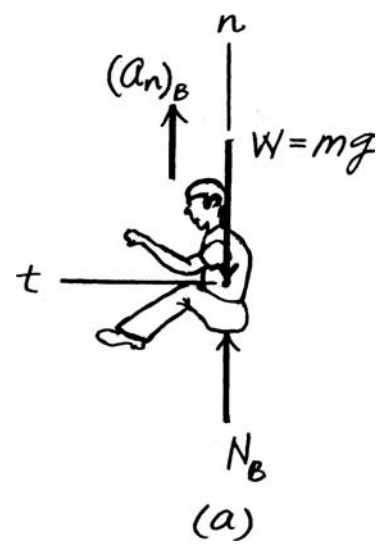

Equations of Motion: Here, $a_n = \frac{v^2}{\rho}$. The requirement at position B is that $N_B = 4mg$. By referring to Fig. a,

$$+\uparrow \Sigma F_n = ma_n; \qquad 4mg - mg = m\left(\frac{{v_B}^2}{15}\right)$$

$${v_B}^2 = 45g$$

At position C, N_C is required to be zero. By referring to Fig. b,

$$+\downarrow \Sigma F_n = ma_n; \qquad mg - 0 = m\left(\frac{{v_C}^2}{20}\right)$$

$${v_C}^2 = 20g$$

Principle of Work and Energy: The normal reaction **N** does no work since it always acts perpendicular to the motion. When the rollercoaster moves from position A to B, **W** displaces vertically downward $h = h_A$ and does positive work.

We have

$$T_A + \Sigma U_{A-B} = T_B$$

$$0 + mgh_A = \frac{1}{2}m(45g)$$

$$h_A = 22.5 \text{ m} \qquad \textbf{Ans.}$$

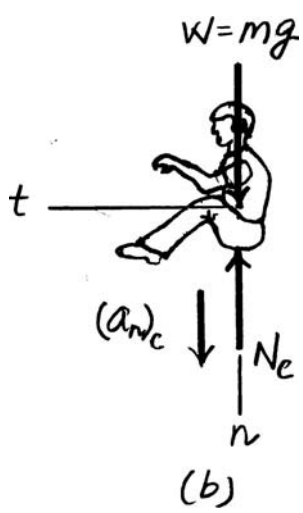

When the rollercoaster moves from position A to C, **W** displaces vertically downward $h = h_A - h_C = (22.5 - h_C)$ m.

$$T_A + \Sigma U_{A-B} = T_B$$

$$0 + mg(22.5 - h_C) = \frac{1}{2}m(20g)$$

$$h_C = 12.5 \text{ m} \qquad \textbf{Ans.}$$

© 2010 Pearson Education, Inc., Upper Saddle River, NJ. All rights reserved. This material is protected under all copyright laws as they currently exist. No portion of this material may be reproduced, in any form or by any means, without permission in writing from the publisher.

14–31. Marbles having a mass of 5 g fall from rest at A through the glass tube and accumulate in the can at C. Determine the placement R of the can from the end of the tube and the speed at which the marbles fall into the can. Neglect the size of the can.

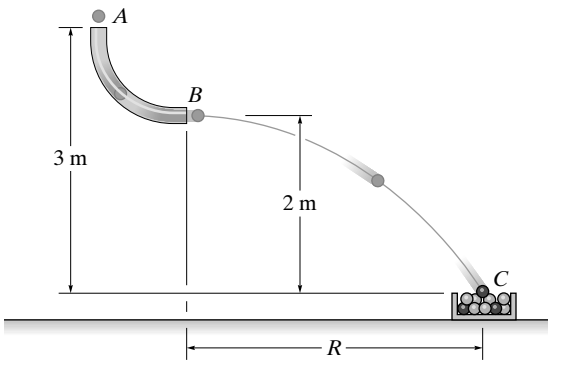

$$T_A + \Sigma U_{A-B} = T_B$$

$$0 + [0.005(9.81)(3 - 2)] = \frac{1}{2}(0.005)v_B^2$$

$$v_B = 4.429 \text{ m/s}$$

$(+\downarrow)$ $$s = s_0 + v_0 t + \frac{1}{2}a_c t^2$$

$$2 = 0 + 0 = \frac{1}{2}(9.81)t^2$$

$$t = 0.6386 \text{ s}$$

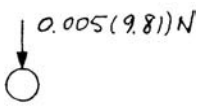

$(\overset{+}{\rightarrow})$ $$s = s_0 + v_0 t$$

$$R = 0 + 4.429(0.6386) = 2.83 \text{ m}$$ **Ans.**

$$T_A + \Sigma U_{A-C} = T_1$$

$$0 + [0.005(9.81)(3)] = \frac{1}{2}(0.005)v_C^2$$

$$v_C = 7.67 \text{ m/s}$$ **Ans.**

***14–32.** The ball has a mass of 0.5 kg and is suspended from a rubber band having an unstretched length of 1 m and a stiffness $k = 50$ N/m. If the support at A to which the rubber band is attached is 2 m from the floor, determine the greatest speed the ball can have at A so that it does not touch the floor when it reaches its lowest point B. Neglect the size of the ball and the mass of the rubber band.

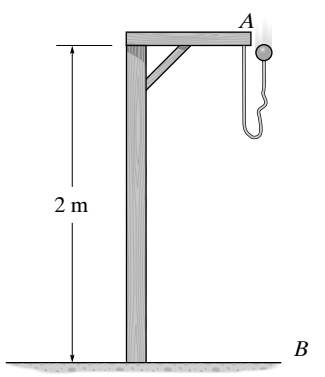

Principle of Work and Energy: The weight of the ball, which acts in the direction of displacement, does *positive* work, whereas the force in the rubber band does *negative* work since it acts in the opposite direction to that of displacement. Here it is required that the ball displace 2 m downward and stop, hence $T_2 = 0$. Applying Eq. 14–7, we have

$$T_1 + \sum U_{1-2} = T_2$$

$$\frac{1}{2}(0.5)v^2 + 0.5(9.81)(2) - \frac{1}{2}(50)(2 - 1)^2 = 0$$

$$v = 7.79 \text{ m/s}$$ **Ans.**

© 2010 Pearson Education, Inc., Upper Saddle River, NJ. All rights reserved. This material is protected under all copyright laws as they currently exist. No portion of this material may be reproduced, in any form or by any means, without permission in writing from the publisher.

•14–33. If the coefficient of kinetic friction between the 100-kg crate and the plane is $\mu_k = 0.25$, determine the compression x of the spring required to bring the crate momentarily to rest. Initially the spring is unstretched and the crate is at rest.

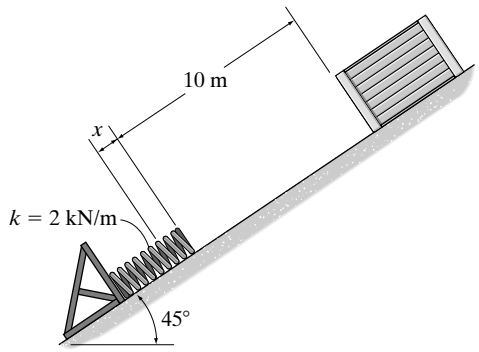

Free-Body Diagram: The normal reaction **N** on the crate can be determined by writing the equation of motion along the y' axis and referring to the free-body diagram of the crate when it is in contact with the spring, Fig. *a*.

$\nwarrow + F_{y'} = ma_{y'}; \qquad N - 100(9.81)\cos 45° = 100(0) \qquad N = 693.67 \text{ N}$

Thus, the frictional force acting on the crate is $F_f = \mu_k N = 0.25(693.67)\text{ N} = 173.42$ N.

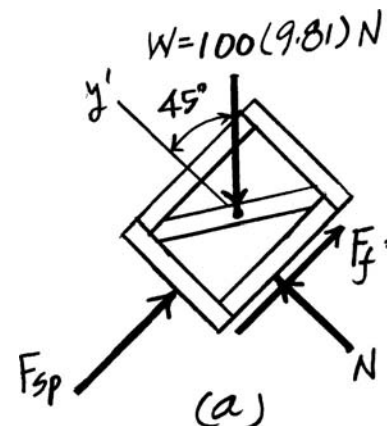

Principle of Work and Energy: By referring to Fig. *a*, we notice that **N** does no work. Here, **W** which displaces downward through a distance of $h = (10 + x)\sin 45°$ does positive work, whereas $\mathbf{F}_f$ and $\mathbf{F}_{sp}$ do negative work.

$$T_1 + \Sigma U_{1-2} = T_2$$

$$0 + 100(9.81)\left[(10 + x)\sin 45°\right] + \left[-173.42(10 + x)\right] + \left[-\frac{1}{2}(2000)x^2\right] = 0$$

$$1000x^2 - 520.25x - 5202.54 = 0$$

Solving for the positive root

$$x = 2.556 \text{ m} = 2.57 \text{ m} \qquad \textbf{Ans.}$$

14–34. If the coefficient of kinetic friction between the 100-kg crate and the plane is $\mu_k = 0.25$, determine the speed of the crate at the instant the compression of the spring is $x = 1.5$ m. Initially the spring is unstretched and the crate is at rest.

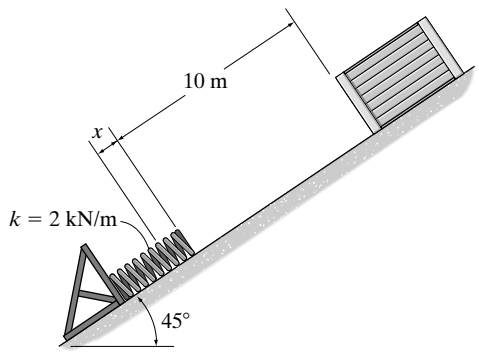

Free-Body Diagram: The normal reaction **N** on the crate can be determined by writing the equation of motion along the y' axis and referring to the free-body diagram of the crate when it is in contact with the spring, Fig. *a*.

$\nwarrow + F_{y'} = ma_{y'}; \qquad N - 100(9.81)\cos 45° = 100(0) \qquad N = 693.67 \text{ N}$

Thus, the frictional force acting on the crate is $F_f = \mu_k N = 0.25(693.67)\text{ N} = 173.42$ N. The force developed in the spring is $F_{sp} = kx = 2000x$.

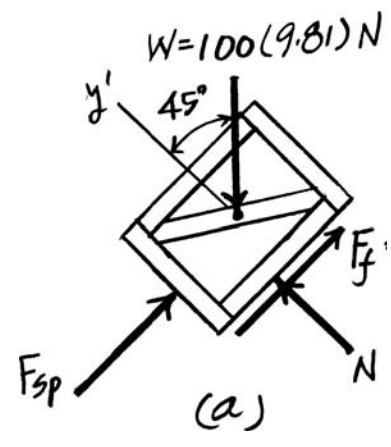

Principle of Work and Energy: By referring to Fig. *a*, notice that **N** does no work. Here, **W** which displaces downward through a distance of $h = (10 + 1.5)\sin 45° = 8.132$ m does positive work, whereas $\mathbf{F}_f$ and $\mathbf{F}_{sp}$ do negative work.

$$T_1 + \Sigma U_{1-2} = T_2$$

$$0 + 100(9.81)(8.132) + \left[-173.42(10 + 1.5)\right] + \left[-\frac{1}{2}(2000)(1.5^2)\right] = \frac{1}{2}(100)v^2$$

$$v = 8.64 \text{m/s} \qquad \textbf{Ans.}$$

© 2010 Pearson Education, Inc., Upper Saddle River, NJ. All rights reserved. This material is protected under all copyright laws as they currently exist. No portion of this material may be reproduced, in any form or by any means, without permission in writing from the publisher.

14–35. A 2-lb block rests on the smooth semicylindrical surface. An elastic cord having a stiffness $k = 2$ lb/ft is attached to the block at B and to the base of the semicylinder at point C. If the block is released from rest at $A(\theta = 0°)$, determine the unstretched length of the cord so that the block begins to leave the semicylinder at the instant $\theta = 45°$. Neglect the size of the block.

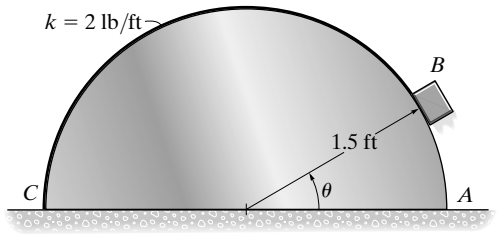

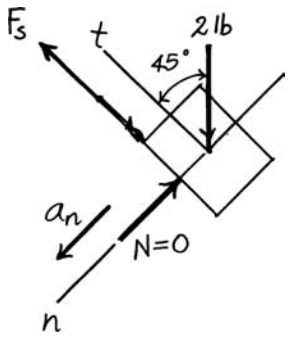

$$+\swarrow \Sigma F_n = ma_n; \qquad 2 \sin 45° = \frac{2}{32.2}\left(\frac{v^2}{1.5}\right)$$

$$v = 5.844 \text{ ft/s}$$

$$T_1 + \Sigma U_{1-2} = T_2$$

$$0 + \frac{1}{2}(2)\left[\pi(1.5) - l_0\right]^2 - \frac{1}{2}(2)\left[\frac{3\pi}{4}(1.5) - l_0\right]^2 - 2(1.5 \sin 45°) = \frac{1}{2}\left(\frac{2}{32.2}\right)(5.844)^2$$

$$l_0 = 2.77 \text{ ft} \qquad \textbf{Ans.}$$

© 2010 Pearson Education, Inc., Upper Saddle River, NJ. All rights reserved. This material is protected under all copyright laws as they currently exist. No portion of this material may be reproduced, in any form or by any means, without permission in writing from the publisher.

***14–36.** The 50-kg stone has a speed of $v_A = 8$ m/s when it reaches point A. Determine the normal force it exerts on the incline when it reaches point B. Neglect friction and the stone's size.

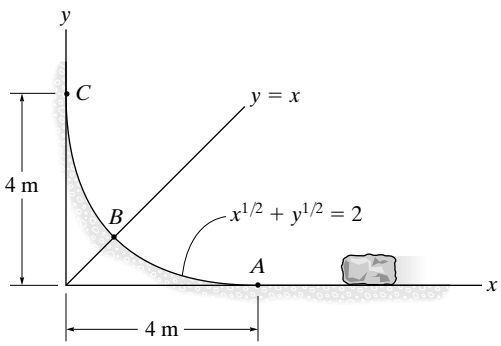

Geometry: Here, $x^{1/2} + y^{1/2} = 2$. At point B, $y = x$, hence $2x^{1/2} = 2$ and $x = y = 1$ m.

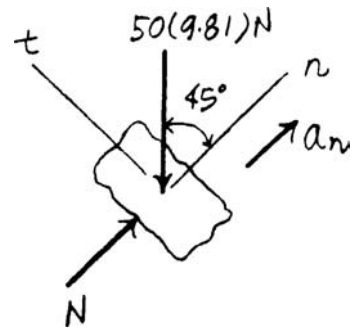

$$y^{-1/2}\frac{dy}{dx} = -x^{-1/2} \qquad \frac{dy}{dx} = \left.\frac{x^{-1/2}}{y^{-1/2}}\right|_{x=1\text{ m},\, y=1\text{ m}} = -1$$

$$y^{-1/2}\frac{d^2y}{dx^2} + \left(-\frac{1}{2}\right)y^{-3/2}\left(\frac{dy}{dx}\right)^2 = -\left(-\frac{1}{2}x^{-3/2}\right)$$

$$\frac{d^2y}{dx^2} = y^{1/2}\left[\frac{1}{2y^{3/2}}\left(\frac{dy}{dx}\right)^2 + \frac{1}{2x^{3/2}}\right]\Bigg|_{x=1\text{ m},\, y=1\text{ m}} = 1$$

The slope angle θ at point B is given by

$$\tan\theta = \left.\frac{dy}{dx}\right|_{x=1\text{ m},\, y=1\text{ m}} = -1 \qquad \theta = -45.0°$$

and the radius of curvature at point B is

$$\rho = \frac{\left[1 + (dy/dx)^2\right]^{3/2}}{|d^2y/dx^2|} = \left.\frac{\left[1 + (-1)^2\right]^{3/2}}{|1|}\right| = 2.828\text{ m}$$

Principle of Work and Energy: The weight of the block which acts in the opposite direction to that of the vertical displacement does *negative* work when the block displaces 1 m vertically. Applying Eq. 14–7, we have

$$T_A + \sum U_{A-B} = T_B$$

$$\frac{1}{2}(50)\left(8^2\right) - 50(9.81)(1) = \frac{1}{2}(50)\,v_B^2$$

$$v_B^2 = 44.38\text{ m}^2/\text{s}^2$$

Equations of Motion: Applying Eq. 13–8 with $\theta = 45.0°$, $v_B^2 = 44.38\text{ m}^2/\text{s}^2$ and $\rho = 2.828$ m, we have

$$+\nearrow \Sigma F_n = ma_n; \qquad N - 50(9.81)\cos 45° = 50\left(\frac{44.38}{2.828}\right)$$

$$N = 1131.37\text{ N} = 1.13\text{ kN} \qquad \textbf{Ans.}$$

© 2010 Pearson Education, Inc., Upper Saddle River, NJ. All rights reserved. This material is protected under all copyright laws as they currently exist. No portion of this material may be reproduced, in any form or by any means, without permission in writing from the publisher.

•14–37. If the 75-kg crate starts from rest at A, determine its speed when it reaches point B. The cable is subjected to a constant force of $F = 300$ N. Neglect friction and the size of the pulley.

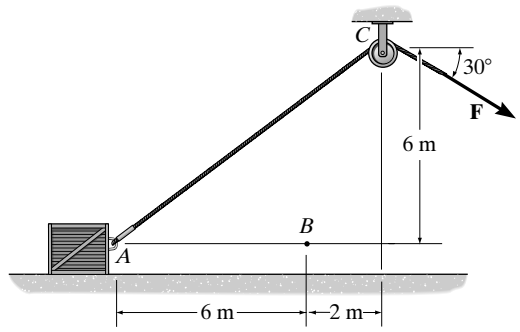

Free-Body Diagram: The free-body diagram of the crate and cable system at an arbitrary position is shown in Fig. *a*.

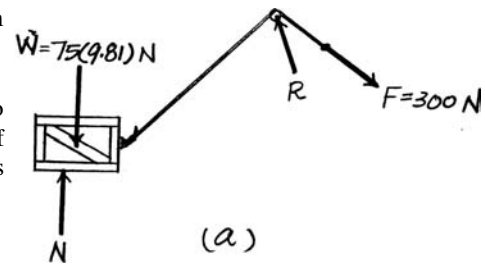

Principle of Work and Energy: By referring to Fig. *a*, notice that **N**, **W**, and **R** do no work. When the crate moves from A to B, force **F** displaces through a distance of $s = AC - BC = \sqrt{8^2 + 6^2} - \sqrt{2^2 + 6^2} = 3.675$ m. Here, the work of **F** is positive.

$$T_1 + \Sigma U_{1-2} = T_2$$

$$0 + 300(3.675) = \frac{1}{2}(75)v_B{}^2$$

$$v_B = 5.42 \text{ m/s} \qquad \textbf{Ans.}$$

14–38. If the 75-kg crate starts from rest at A, and its speed is 6 m/s when it passes point B, determine the constant force **F** exerted on the cable. Neglect friction and the size of the pulley.

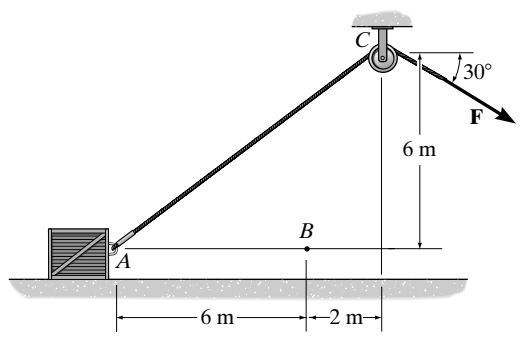

Free-Body Diagram: The free-body diagram of the crate and cable system at an arbitrary position is shown in Fig. *a*.

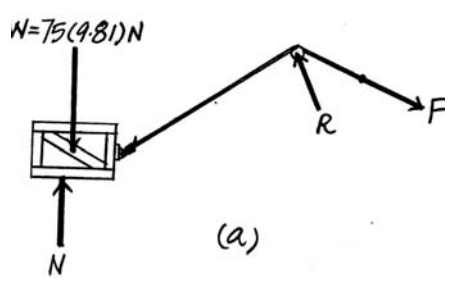

Principle of Work and Energy: By referring to Fig. *a*, notice that **N**, **W**, and **R** do no work. When the crate moves from A to B, force **F** displaces through a distance of $s = AC - BC = \sqrt{8^2 + 6^2} - \sqrt{2^2 + 6^2} = 3.675$ m. Here, the work of **F** is positive.

$$T_1 + \Sigma U_{1-2} = T_2$$

$$0 + F(3.675) = \frac{1}{2}(75)(6^2)$$

$$F = 367 \text{ N} \qquad \textbf{Ans.}$$

© 2010 Pearson Education, Inc., Upper Saddle River, NJ. All rights reserved. This material is protected under all copyright laws as they currently exist. No portion of this material may be reproduced, in any form or by any means, without permission in writing from the publisher.

14–39. If the 60-kg skier passes point A with a speed of 5 m/s, determine his speed when he reaches point B. Also find the normal force exerted on him by the slope at this point. Neglect friction.

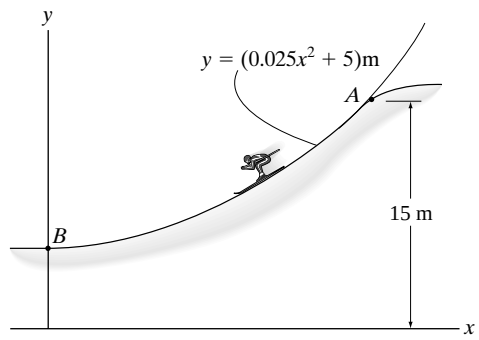

Free-Body Diagram: The free-body diagram of the skier at an arbitrary position is shown in Fig. *a*.

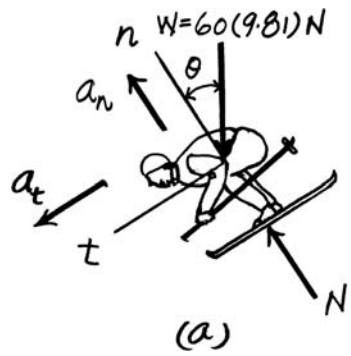

Principle of Work and Energy: By referring to Fig. *a*, we notice that **N** does no work since it always acts perpendicular to the motion. When the skier slides down the track from A to B, **W** displaces vertically downward $h = y_A - y_B = 15 - \left[0.025\left(0^2\right) + 5\right] = 10$ m and does positive work.

$$T_A + \Sigma U_{A-B} = T_B$$

$$\frac{1}{2}(60)(5^2) + \left[60(9.81)(10)\right] = \frac{1}{2}(60)v_B{}^2$$

$$v_B = 14.87 \text{ m/s} = 14.9 \text{ m/s} \qquad \textbf{Ans.}$$

$$dy/dx = 0.05x$$

$$d^2y/dx^2 = 0.05$$

$$\rho = \frac{[1 + 0]^{3/2}}{0.5} = 20 \text{ m}$$

$$+\uparrow \Sigma F_n = ma_n; \qquad N - 60(9.81) = 60\left(\frac{(14.87)^2}{20}\right)$$

$$N = 1.25 \text{ kN} \qquad \textbf{Ans.}$$

© 2010 Pearson Education, Inc., Upper Saddle River, NJ. All rights reserved. This material is protected under all copyright laws as they currently exist. No portion of this material may be reproduced, in any form or by any means, without permission in writing from the publisher.

***14–40.** The 150-lb skater passes point A with a speed of 6 ft/s. Determine his speed when he reaches point B and the normal force exerted on him by the track at this point. Neglect friction.

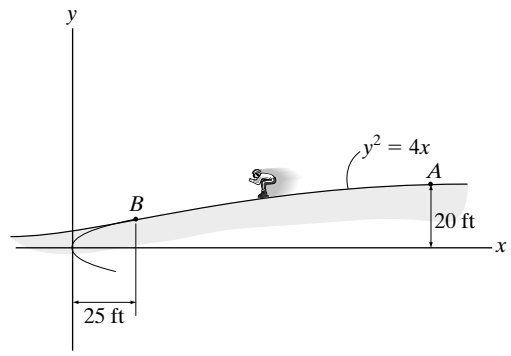

Free-Body Diagram: The free-body diagram of the skater at an arbitrary position is shown in Fig. *a*.

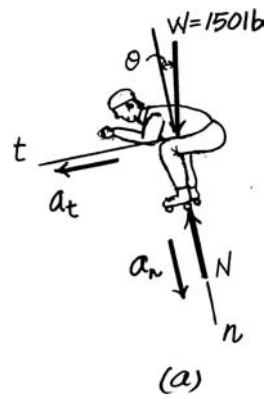

Principle of Work and Energy: By referring to Fig. *a*, notice that **N** does no work since it always acts perpendicular to the motion. When the skier slides down the track from A to B, **W** displaces vertically downward $h = y_A - y_B = 20 - \left[2(25)^{1/2}\right] = 10$ ft and does positive work.

$$T_A + \Sigma U_{A-B} = T_B$$

$$\frac{1}{2}\left(\frac{150}{32.2}\right)\left(6^2\right) + \left[150(10)\right] = \frac{1}{2}\left(\frac{150}{32.2}\right)v_B{}^2$$

$$v_B = 26.08 \text{ ft/s} = 26.1 \text{ ft/s} \qquad \textbf{Ans.}$$

Equations of Motion: Here, $a_n = \dfrac{v^2}{\rho}$. By referring to Fig. *a*,

$$\searrow + \Sigma F_n = ma_n; \qquad 150\cos\theta - N = \frac{150}{32.2}\left(\frac{v^2}{\rho}\right)$$

$$N = 150\cos\theta - \frac{150}{32.2}\left(\frac{v^2}{\rho}\right) \qquad \textbf{(1)}$$

Geometry: Here, $y = 2x^{1/2}$, $\dfrac{dy}{dx} = \dfrac{1}{x^{1/2}}$, and $\dfrac{d^2y}{dx^2} = -\dfrac{1}{2x^{3/2}}$. The slope that the track at position B makes with the horizontal is $\theta_B = \tan^{-1}\left(\dfrac{dx}{dy}\right)\Big|_{x=25\text{ ft}}$ $= \tan\left(\dfrac{1}{x^{1/2}}\right)\Big|_{x=25\text{ ft}} = 11.31°$. The radius of curvature of the track at position B is given by

$$\rho_B = \frac{\left[1 + \left(\dfrac{dy}{dx}\right)^2\right]^{3/2}}{\left|\dfrac{d^2y}{dx^2}\right|} = \left.\frac{\left[1 + \left(\dfrac{1}{x^{1/2}}\right)^2\right]^{3/2}}{\left|-\dfrac{1}{2x^{3/2}}\right|}\right|_{x=25\text{ ft}} = 265.15 \text{ ft}$$

Substituting $\theta = \theta_B = 11.31°$, $v = v_B = 26.08$ ft/s, and $\rho = \rho_B = 265.15$ ft into Eq. (1),

$$N_B = 150\cos 11.31° - \frac{150}{32.2}\left(\frac{26.08^2}{265.15}\right)$$

$$= 135 \text{ lb} \qquad \textbf{Ans.}$$

© 2010 Pearson Education, Inc., Upper Saddle River, NJ. All rights reserved. This material is protected under all copyright laws as they currently exist. No portion of this material may be reproduced, in any form or by any means, without permission in writing from the publisher.

•14–41. A small box of mass m is given a speed of $v = \sqrt{\frac{1}{4}gr}$ at the top of the smooth half cylinder. Determine the angle θ at which the box leaves the cylinder.

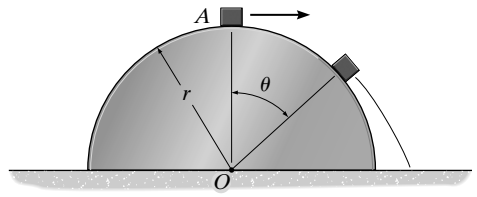

Principle of Work and Energy: By referring to the free-body diagram of the block, Fig. *a*, notice that **N** does no work, while **W** does positive work since it displaces downward though a distance of $h = r - r\cos\theta$.

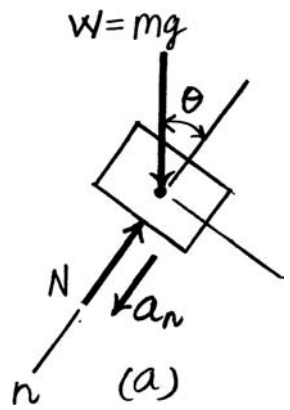

$$T_1 + \Sigma U_{1-2} = T_2$$

$$\frac{1}{2}m\left(\frac{1}{4}gr\right) + mg(r - r\cos\theta) = \frac{1}{2}mv^2$$

$$v^2 = gr\left(\frac{9}{4} - 2\cos\theta\right) \qquad (1)$$

Equations of Motion: Here, $a_n = \frac{v^2}{\rho} = \frac{gr\left(\frac{9}{4} - 2\cos\theta\right)}{r} = g\left(\frac{9}{4} - 2\cos\theta\right)$. By referring to Fig. *a*,

$$\Sigma F_n = ma_n; \qquad mg\cos\theta - N = m\left[g\left(\frac{9}{4} - 2\cos\theta\right)\right]$$

$$N = mg\left(3\cos\theta - \frac{9}{4}\right)$$

It is required that the block leave the track. Thus, $N = 0$.

$$0 = mg\left(3\cos\theta - \frac{9}{4}\right)$$

Since $mg \neq 0$,

$$3\cos\theta - \frac{9}{4} = 0$$

$$\theta = 41.41° = 41.4° \qquad \textbf{Ans.}$$

© 2010 Pearson Education, Inc., Upper Saddle River, NJ. All rights reserved. This material is protected under all copyright laws as they currently exist. No portion of this material may be reproduced, in any form or by any means, without permission in writing from the publisher.

14–42. The diesel engine of a 400-Mg train increases the train's speed uniformly from rest to 10 m/s in 100 s along a horizontal track. Determine the average power developed.

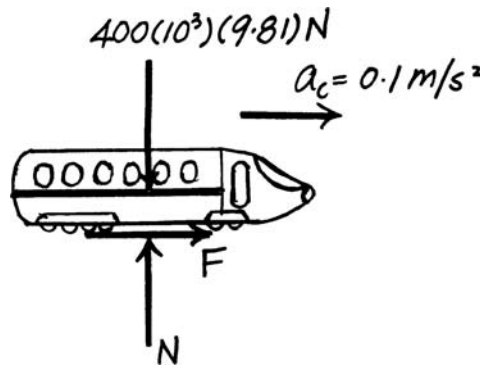

$$T_1 + \Sigma U_{1-2} = T_2$$

$$0 + U_{1-2} = \frac{1}{2}(400)\left(10^3\right)\left(10^2\right)$$

$$U_{1-2} = 20\left(10^6\right)\text{ J}$$

$$P_{avg} = \frac{U_{1-2}}{t} = \frac{20(10^6)}{100} = 200\text{ kW}$$ **Ans.**

Also,

$$v = v_0 + a_c t$$

$$10 = 0 + a_c(100)$$

$$a_c = 0.1\text{ m/s}^2$$

$$\xrightarrow{+} \Sigma F_x = ma_x; \qquad F = 400\left(10^3\right)(0.1) = 40\left(10^3\right)\text{ N}$$

$$P_{avg} = \mathbf{F}\cdot\mathbf{v}_{avg} = 40\left(10^3\right)\left(\frac{10}{2}\right) = 200\text{ kW}$$ **Ans.**

14–43. Determine the power input for a motor necessary to lift 300 lb at a constant rate of 5 ft/s. The efficiency of the motor is $\epsilon = 0.65$.

Power: The power output can be obtained using Eq. 14–10.

$$P = \mathbf{F}\cdot\mathbf{v} = 300(5) = 1500\text{ ft}\cdot\text{lb/s}$$

Using Eq. 14–11, the required power input for the motor to provide the above power output is

$$\text{power input} = \frac{\text{power output}}{\epsilon}$$

$$= \frac{1500}{0.65} = 2307.7\text{ ft}\cdot\text{lb/s} = 4.20\text{ hp}$$ **Ans.**

© 2010 Pearson Education, Inc., Upper Saddle River, NJ. All rights reserved. This material is protected under all copyright laws as they currently exist. No portion of this material may be reproduced, in any form or by any means, without permission in writing from the publisher.

***14–44.** An electric streetcar has a weight of 15 000 lb and accelerates along a horizontal straight road from rest so that the power is always 100 hp. Determine how far it must travel to reach a speed of 40 ft/s.

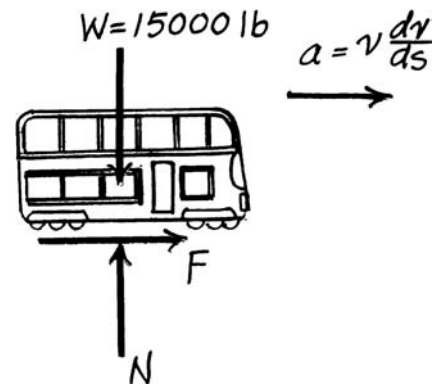

$$F = ma = \frac{W}{g}\left(\frac{v\,dv}{ds}\right)$$

$$P = Fv = \left[\left(\frac{W}{g}\right)\left(\frac{v\,dv}{ds}\right)\right]v$$

$$\int_0^s P\,ds = \int_0^v \frac{W}{g}v^2\,dv$$

$$P = \text{constant}$$

$$Ps = \frac{W}{g}\left(\frac{1}{3}\right)v^3 \qquad s = \frac{W}{3gP}v^3$$

$$s = \frac{(15\,000)(40)^3}{3(32.2)(100)(550)} = 181\text{ ft}$$ **Ans.**

•14–45. The Milkin Aircraft Co. manufactures a turbojet engine that is placed in a plane having a weight of 13000 lb. If the engine develops a constant thrust of 5200 lb, determine the power output of the plane when it is just ready to take off with a speed of 600 mi/h.

At 600 ms/h.

$$P = 5200(600)\left(\frac{88\text{ ft/s}}{60\text{ m/h}}\right)\frac{1}{550} = 8.32\,(10^3)\text{ hp}$$ **Ans.**

14–46. The engine of the 3500-lb car is generating a constant power of 50 hp while the car is traveling up the slope with a constant speed. If the engine is operating with an efficiency of $\epsilon = 0.8$, determine the speed of the car. Neglect drag and rolling resistance.

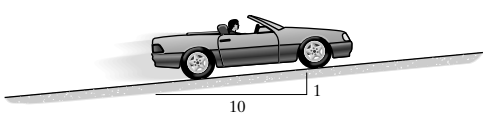

Equations of Motion: By referring to the free-body diagram of the car shown in Fig. *a*,

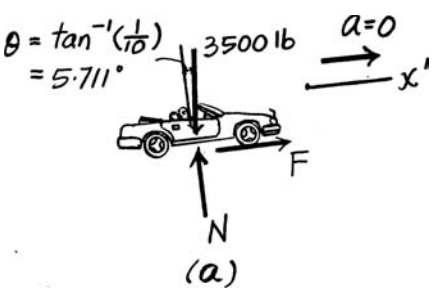

$$+\nearrow \Sigma F_{x'} = ma_{x'}; \qquad F - 3500\sin 5.711^\circ = \frac{3500}{32.2}(0) \qquad F = 348.26\text{ lb}$$

Power: The power input of the car is $P_{in} = (50\text{ hp})\left(\frac{550\text{ ft}\cdot\text{lb/s}}{1\text{ hp}}\right) = 27\,500\text{ ft}\cdot\text{lb/s}$. Thus, the power output is given by $P_{out} = \varepsilon P_{in} = 0.8(27\,500) = 22\,000\text{ ft}\cdot\text{lb/s}$.

$$P_{out} = \mathbf{F}\cdot\mathbf{v}$$

$$22\,000 = 348.26v$$

$$v = 63.2\text{ ft/s}$$ **Ans.**

© 2010 Pearson Education, Inc., Upper Saddle River, NJ. All rights reserved. This material is protected under all copyright laws as they currently exist. No portion of this material may be reproduced, in any form or by any means, without permission in writing from the publisher.

14–47. A loaded truck weighs $16(10^3)$ lb and accelerates uniformly on a level road from 15 ft/s to 30 ft/s during 4 s. If the frictional resistance to motion is 325 lb, determine the maximum power that must be delivered to the wheels.

$$a = \frac{\Delta v}{\Delta t} = \frac{30 - 15}{4} = 3.75 \text{ ft/s}^2$$

$$\overset{+}{\leftarrow} \Sigma F_x = ma_x; \qquad F - 325 = \left(\frac{16(10^3)}{32.2}\right)(3.75)$$

$$F = 2188.35 \text{ lb}$$

$$P_{\max} = \mathbf{F} \cdot \mathbf{v}_{\max} = \frac{2188.35(30)}{550} = 119 \text{ hp} \qquad \textbf{Ans.}$$

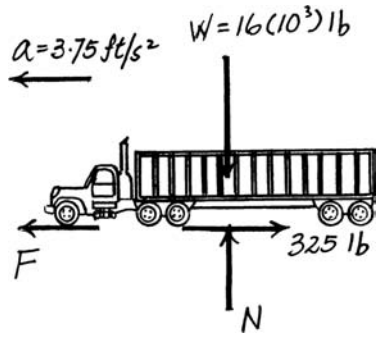

***14–48.** An automobile having a weight of 3500 lb travels up a 7° slope at a constant speed of $v = 40$ ft/s. If friction and wind resistance are neglected, determine the power developed by the engine if the automobile has a mechanical efficiency of $\epsilon = 0.65$.

$$s = vt = 40(1) = 40 \text{ ft}$$

$$U_{1-2} = (3500)(40 \sin 7°) = 17.062\left(10^3\right) \text{ ft} \cdot \text{lb}$$

$$P_{in} = \frac{P_o}{e} = \frac{17.062(10^3) \text{ ft} \cdot \text{lb/s}}{0.65} = 26.249\left(10^3\right) \text{ ft} \cdot \text{lb/s} = 47.7 \text{ hp}$$

$$P_{out} = \frac{U_{1-2}}{t} = \frac{17.602(10^3)}{1} = 17.062\left(10^3\right) \text{ ft} \cdot \text{lb/s} \qquad \textbf{Ans.}$$

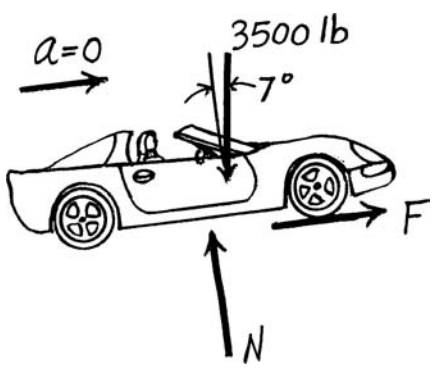

Also,

$$F = 3500 \sin 7° = 426.543 \text{ lb}$$

$$P_{out} = \mathbf{F} \cdot \mathbf{v} = 426.543\,(40) = 17.062\left(10^3\right) \text{ ft} \cdot \text{lb/s}$$

$$P_{in} = \frac{P_o}{e} = \frac{17.062\,(10^3) \text{ ft} \cdot \text{lb/s}}{0.65} = 26.249\left(10^3\right) \text{ ft} \cdot \text{lb/s} = 47.7 \text{ hp} \qquad \textbf{Ans.}$$

© 2010 Pearson Education, Inc., Upper Saddle River, NJ. All rights reserved. This material is protected under all copyright laws as they currently exist. No portion of this material may be reproduced, in any form or by any means, without permission in writing from the publisher.

•14–49. An escalator step moves with a constant speed of 0.6 m/s. If the steps are 125 mm high and 250 mm in length, determine the power of a motor needed to lift an average mass of 150 kg per step. There are 32 steps.

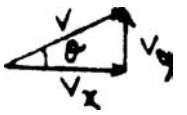

Step height: 0.125 m

The number of steps: $\frac{4}{0.125} = 32$

Total load: $32(150)(9.81) = 47\,088$ N

If load is placed at the center height, $h = \frac{4}{2} = 2$ m, then

$$U = 47\,088\left(\frac{4}{2}\right) = 94.18 \text{ kJ}$$

$$v_s = v \sin\theta = 0.6\left(\frac{4}{\sqrt{(32(0.25))^2 + 4^2}}\right) = 0.2683 \text{ m/s}$$

$$t = \frac{h}{v_y} = \frac{2}{0.2683} = 7.454 \text{ s}$$

$$P = \frac{U}{t} = \frac{94.18}{7.454} = 12.6 \text{ kW} \qquad \textbf{Ans.}$$

Also,

$$P = \mathbf{F}\cdot\mathbf{v} = 47\,088(0.2683) = 12.6 \text{ kW} \qquad \textbf{Ans.}$$

14–50. The man having the weight of 150 lb is able to run up a 15-ft-high flight of stairs in 4 s. Determine the power generated. How long would a 100-W light bulb have to burn to expend the same amount of energy? *Conclusion:* Please turn off the lights when they are not in use!

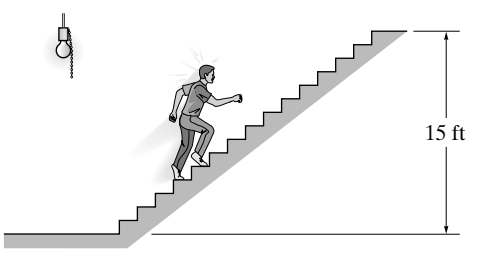

Power: The work done by the man is

$$U = Wh = 150(15) = 2250 \text{ ft}\cdot\text{lb}$$

Thus, the power generated by the man is given by

$$P_{\max} = \frac{U}{t} = \frac{2250}{4} = 562.5 \text{ ft}\cdot\text{lb/s} = 1.02 \text{ hp} \qquad \textbf{Ans.}$$

The power of the bulb is $P_{\text{bulb}} = 100\,W \times \left(\frac{1 \text{ hp}}{746 \text{ W}}\right) \times \left(\frac{550 \text{ ft}\cdot\text{lb/s}}{1 \text{ hp}}\right) =$ 73.73 ft · lb/s. Thus,

$$t = \frac{U}{P_{\text{bulb}}} = \frac{2250}{73.73} = 30.5 \text{ s} \qquad \textbf{Ans.}$$

© 2010 Pearson Education, Inc., Upper Saddle River, NJ. All rights reserved. This material is protected under all copyright laws as they currently exist. No portion of this material may be reproduced, in any form or by any means, without permission in writing from the publisher.

14–51. The material hoist and the load have a total mass of 800 kg and the counterweight C has a mass of 150 kg. At a given instant, the hoist has an upward velocity of 2 m/s and an acceleration of 1.5 m/s^2. Determine the power generated by the motor M at this instant if it operates with an efficiency of $\epsilon = 0.8$.

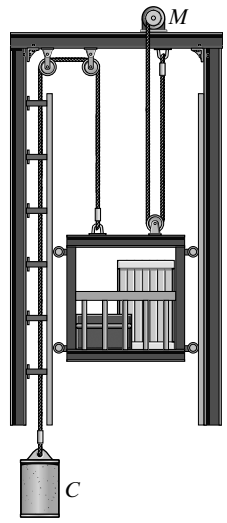

Equations of Motion: Here, $a = 1.5$ m/s^2. By referring to the free-body diagram of the hoist and counterweight shown in Fig. a,

$$+\uparrow \Sigma F_y = ma_y; \qquad 2T + T' - 800(9.81) = 800(1.5) \qquad \textbf{(1)}$$

$$+\downarrow \Sigma F_y = ma_y; \qquad 150(9.81) - T' = 150(1.5)$$

Solving,

$$T' = 1246.5 \text{ N}$$

$$T = 3900.75 \text{ N}$$

Power:

$$P_{\text{out}} = 2\mathbf{T} \cdot \mathbf{v} = 2(3900.75)(2) = 15\,603 \text{ W}$$

Thus,

$$P_{\text{in}} = \frac{P_{\text{out}}}{\varepsilon} = \frac{15603}{0.8} = 19.5(10^3) \text{ W} = 19.5 \text{ kW} \qquad \textbf{Ans.}$$

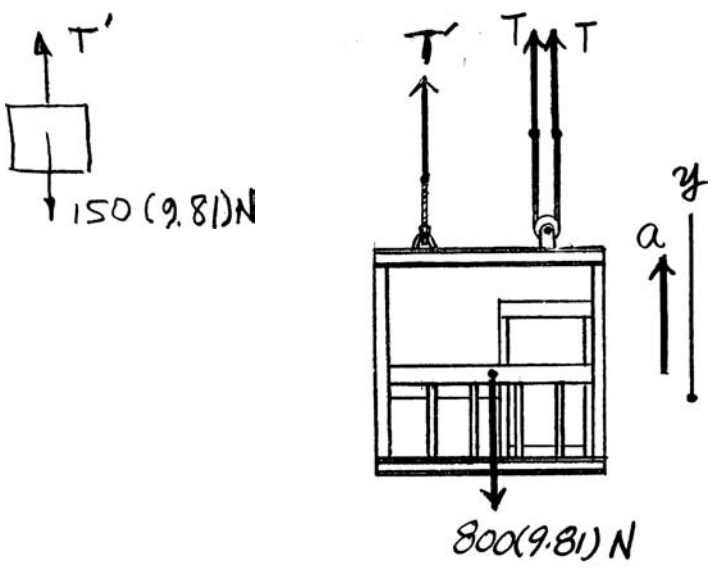

(a)

© 2010 Pearson Education, Inc., Upper Saddle River, NJ. All rights reserved. This material is protected under all copyright laws as they currently exist. No portion of this material may be reproduced, in any form or by any means, without permission in writing from the publisher.

***14–52.** The material hoist and the load have a total mass of 800 kg and the counterweight C has a mass of 150 kg. If the upward speed of the hoist increases uniformly from 0.5 m/s to 1.5 m/s in 1.5 s, determine the average power generated by the motor M during this time. The motor operates with an efficiency of $\epsilon = 0.8$.

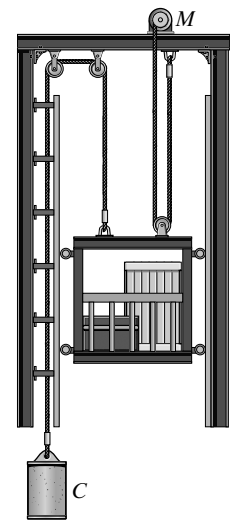

Kinematics: The acceleration of the hoist can be determined from

$$(+\uparrow) \qquad v = v_0 + a_c t$$

$$1.5 = 0.5 + a(1.5)$$

$$a = 0.6667 \text{ m/s}^2$$

Equations of Motion: Using the result of **a** and referring to the free-body diagram of the hoist and block shown in Fig. a,

$$+\uparrow \Sigma F_y = ma_y; \qquad 2T + T' - 800(9.81) = 800(0.6667)$$

$$+\downarrow \Sigma F_y = ma_y; \qquad 150(9.81) - T' = 150(0.6667)$$

Solving,

$$T' = 1371.5 \text{ N}$$

$$T = 3504.92 \text{ N}$$

Power:

$$(P_{\text{out}})_{\text{avg}} = 2\mathbf{T} \cdot \mathbf{v}_{\text{avg}} = 2(3504.92)\left(\frac{1.5 + 0.5}{2}\right) = 7009.8 \text{ W}$$

Thus,

$$P_{\text{in}} = \frac{P_{\text{out}}}{\varepsilon} = \frac{7009.8}{0.8} = 8762.3 \qquad \text{W} = 8.76 \text{ kW} \qquad \textbf{Ans.}$$

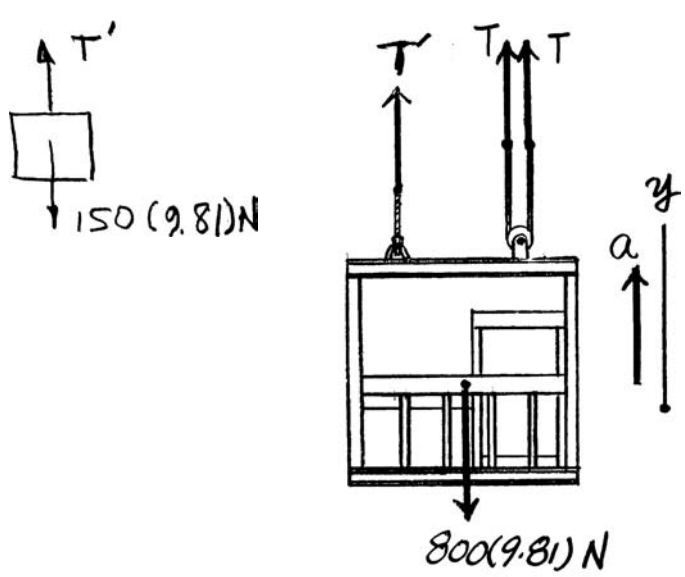

(a)

© 2010 Pearson Education, Inc., Upper Saddle River, NJ. All rights reserved. This material is protected under all copyright laws as they currently exist. No portion of this material may be reproduced, in any form or by any means, without permission in writing from the publisher.

•14–53. The 2-Mg car increases its speed uniformly from rest to 25 m/s in 30 s up the inclined road. Determine the maximum power that must be supplied by the engine, which operates with an efficiency of $\epsilon = 0.8$. Also, find the average power supplied by the engine.

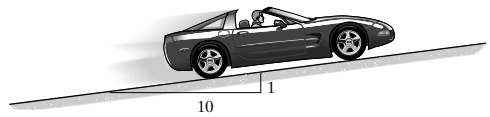

Kinematics: The constant acceleration of the car can be determined from

$$(\overset{+}{\rightarrow}) \qquad v = v_0 + a_c t$$

$$25 = 0 + a_c(30)$$

$$a_c = 0.8333 \text{ m/s}^2$$

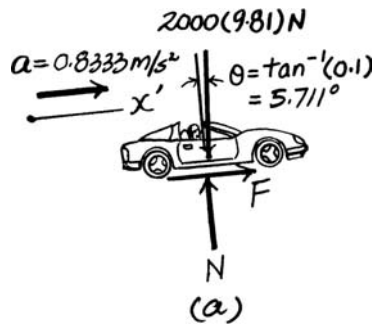

Equations of Motion: By referring to the free-body diagram of the car shown in Fig. *a*,

$$\Sigma F_{x'} = ma_{x'}; \qquad F - 2000(9.81)\sin 5.711° = 2000(0.8333)$$

$$F = 3618.93\text{N}$$

Power: The maximum power output of the motor can be determined from

$$(P_{\text{out}})_{\max} = \mathbf{F}\cdot\mathbf{v}_{\max} = 3618.93(25) = 90\,473.24 \text{ W}$$

Thus, the maximum power input is given by

$$P_{\text{in}} = \frac{P_{\text{out}}}{\varepsilon} = \frac{90473.24}{0.8} = 113\,091.55 \text{ W} = 113 \text{ kW} \qquad \textbf{Ans.}$$

The average power output can be determined from

$$(P_{\text{out}})_{\text{avg}} = \mathbf{F}\cdot\mathbf{v}_{\text{avg}} = 3618.93\left(\frac{25}{2}\right) = 45\,236.62 \text{ W}$$

Thus,

$$(P_{\text{in}})_{\text{avg}} = \frac{(P_{\text{out}})_{\text{avg}}}{\varepsilon} = \frac{45236.62}{0.8} = 56\,545.78 \text{ W} = 56.5 \text{ kW} \qquad \textbf{Ans.}$$

© 2010 Pearson Education, Inc., Upper Saddle River, NJ. All rights reserved. This material is protected under all copyright laws as they currently exist. No portion of this material may be reproduced, in any form or by any means, without permission in writing from the publisher.

14–54. Determine the velocity of the 200-lb crate in 15 s if the motor operates with an efficiency of $\epsilon = 0.8$. The power input to the motor is 2.5 hp. The coefficient of kinetic friction between the crate and the plane is $\mu_k = 0.2$.

Equations of Motion: By referring to the free-body diagram of the crate shown in Fig. *a*,

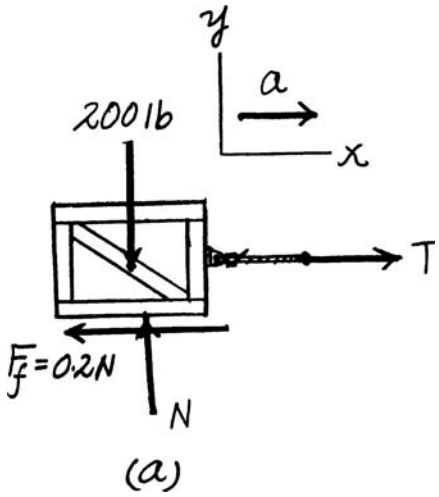

$$+\uparrow \Sigma F_y = ma_y; \qquad N - 200 = \frac{200}{32.2}(0) \qquad N = 200 \text{ lb}$$

$$\overset{+}{\rightarrow} \Sigma F_x = ma_x; \qquad T - 0.2(200) = \frac{200}{32.2}(a)$$

$$T = \left(\frac{200}{32.2}a + 40\right) \text{ lb} \qquad \textbf{(1)}$$

Power: Here, the power input is $P_{in} = (2.5 \text{ hp})\left(\frac{550 \text{ ft}\cdot\text{lb/s}}{1 \text{ hp}}\right) = 1375 \text{ ft}\cdot\text{lb/s}$. Thus,

$P_{out} = \varepsilon P_{in} = 0.8(1375) = 1100 \text{ ft}\cdot\text{lb/s}.$

$$P_{out} = \mathbf{T}\cdot\mathbf{v}$$

$$1100 = Tv \qquad \textbf{(2)}$$

Kinematics: The speed of the crate is

$$\left(\overset{+}{\rightarrow}\right) \qquad v = v_0 + a_c t$$

$$v = 0 + a(15)$$

$$v = 15a \qquad \textbf{(3)}$$

Substituting Eq. (3) into Eq. (2) yields

$$T = \frac{73.33}{a} \qquad \textbf{(4)}$$

Substituting Eq. (4) into Eq. (1) yields

$$\frac{73.33}{a} = \frac{200}{32.2}a + 40$$

Solving for the positive root,

$$a = 1.489 \text{ ft/s}^2$$

Substituting the result into Eq. (3),

$$v = 15(1.489) = 22.3 \text{ ft/s} \qquad \textbf{Ans.}$$

© 2010 Pearson Education, Inc., Upper Saddle River, NJ. All rights reserved. This material is protected under all copyright laws as they currently exist. No portion of this material may be reproduced, in any form or by any means, without permission in writing from the publisher.

14–55. A constant power of 1.5 hp is supplied to the motor while it operates with an efficiency of $\epsilon = 0.8$. Determine the velocity of the 200-lb crate in 15 seconds, starting from rest. Neglect friction.

Equations of Motion: Here, $a = \frac{dv}{dt}$. By referring to the free-body diagram of the crate shown in Fig. *a*,

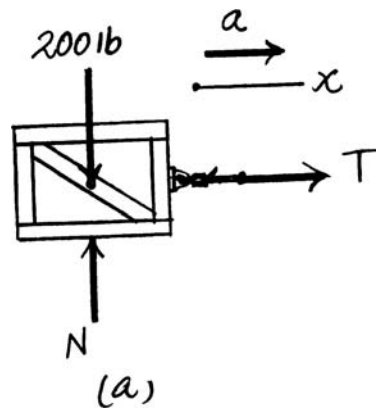

$$\overset{+}{\rightarrow} \Sigma F_x = ma_x; \qquad T = \frac{200}{32.2}\left(\frac{dv}{dt}\right) \qquad \textbf{(1)}$$

Power: Here, the power input is $P_{in} = (1.5\text{ hp})\left(\frac{550\text{ ft}\cdot\text{lb/s}}{1\text{ hp}}\right) = 825\text{ ft}\cdot\text{lb/s}$. Thus,

$P_{out} = \varepsilon P_{in} = 0.8(825) = 660\text{ ft}\cdot\text{lb/s}.$

$$P_{out} = \mathbf{T}\cdot\mathbf{v}$$

$$660 = \frac{200}{32.2}\left(\frac{dv}{dt}\right)v$$

$$\int_0^v v\,dv = \int_0^{15\text{ s}} 106.26\,dt$$

$$\left.\frac{v^2}{2}\right|_0^v = 106.26\,dt\Big|_0^{15\text{ s}}$$

$$v = 56.5\text{ ft/s} \qquad \textbf{Ans.}$$

***14–56.** The fluid transmission of a 30 000-lb truck allows the engine to deliver constant power to the rear wheels. Determine the distance required for the truck traveling on a level road to increase its speed from 35 ft/s to 60 ft/s if 90 hp is delivered to the rear wheels. Neglect drag and rolling resistance.

Equations of Motion: Here, $a = v\frac{dv}{ds}$. By referring to the fre -body diagram of the truck shown in Fig. *a*,

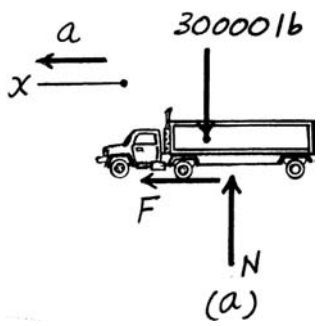

$$\overset{+}{\leftarrow} \Sigma F_x = ma_x; \qquad F = \left(\frac{30000}{32.2}\right)\left(v\frac{dv}{ds}\right) \qquad \textbf{(1)}$$

Power: Here, the power output is $P_{out} = (90\text{ hp})\left(\frac{550\text{ ft}\cdot\text{lb/s}}{1\text{ hp}}\right) = 49500\text{ ft}\cdot\text{lb/s}$. Using Eq. (1),

$$P_{out} = \mathbf{F}\cdot\mathbf{v}$$

$$49500 = \left(\frac{30000}{32.2}\right)\left(v\frac{dv}{ds}\right)v$$

$$\int_0^s 53.13\,ds = \int_{35\text{ ft/s}}^{60\text{ ft/s}} v^2\,dv$$

$$53.13s\Big|_0^s = \left.\frac{v^3}{3}\right|_{35\text{ ft/s}}^{60\text{ ft/s}}$$

$$s = 1086\text{ ft} \qquad \textbf{Ans.}$$

© 2010 Pearson Education, Inc., Upper Saddle River, NJ. All rights reserved. This material is protected under all copyright laws as they currently exist. No portion of this material may be reproduced, in any form or by any means, without permission in writing from the publisher.

•14–57. If the engine of a 1.5-Mg car generates a constant power of 15 kW, determine the speed of the car after it has traveled a distance of 200 m on a level road starting from rest. Neglect friction.

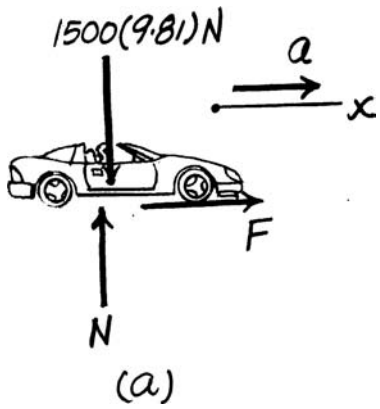

Equations of Motion: Here, $a = v\dfrac{dv}{ds}$. By referring to the free-body diagram of the car shown in Fig. *a*,

$$\overset{+}{\rightarrow} \Sigma F_x = ma_x; \qquad F = 1500\left(v\frac{dv}{ds}\right)$$

Power:

$$P_{\text{out}} = \mathbf{F}\cdot\mathbf{v}$$

$$15(10^3) = 1500\left(v\frac{dv}{ds}\right)v$$

$$\int_0^{200\text{ m}} 10ds = \int_0^v v^2\,dv$$

$$10s\Big|_0^{200\text{ m}} = \frac{v^3}{3}\Big|_0^v$$

$$v = 18.7\text{ m/s} \qquad \textbf{Ans.}$$

14–58. The 1.2-Mg mine car is being pulled by the winch M mounted on the car. If the winch exerts a force of $F = (150t^{3/2})$ N on the cable, where t is in seconds, determine the power output of the winch when $t = 5$ s, starting from rest.

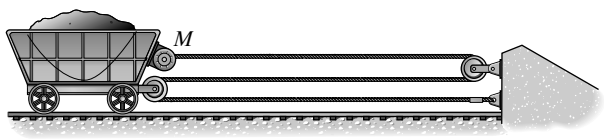

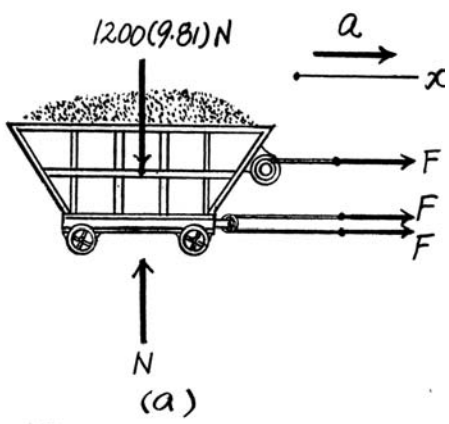

Equations of Motion: By referring to the free-body diagram of the mine car shown in Fig. *a*,

$$\overset{+}{\rightarrow} \Sigma F_x = ma_x; \qquad 3\left(150t^{3/2}\right) = 1200a$$

$$a = \left(0.375t^{3/2}\right)\text{ m/s}^2$$

Kinematics: The speed of the mine car at $t = 5$ s can be determined by integrating the kinematic equation $dv = adt$ and using the result of **a**.

$$\left(\overset{+}{\rightarrow}\right) \qquad \int_0^v dv = \int_0^{5\text{ s}} 0.375t^{3/2}\,dt$$

$$v = 0.15t^{5/2}\Big|_0^{5\text{ s}} = 8.385\text{ m/s}$$

Power: At $t = 5$ s, $F = 150(5^{3/2}) = 1677.05$ N.

$$P_{\text{out}} = 3\mathbf{F}\cdot\mathbf{v}$$

$$= 3(1677.05)(8.385)$$

$$= 42.1875(10^3)\text{ W}$$

$$= 42.2\text{ kW} \qquad \textbf{Ans.}$$

© 2010 Pearson Education, Inc., Upper Saddle River, NJ. All rights reserved. This material is protected under all copyright laws as they currently exist. No portion of this material may be reproduced, in any form or by any means, without permission in writing from the publisher.

14–59. The 1.2-Mg mine car is being pulled by the winch M mounted on the car. If the winch generates a constant power output of 30 kW, determine the speed of the car at the instant it has traveled a distance of 30 m, starting from rest.

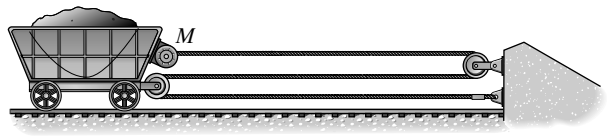

Equations of Motion: Here, $a = v\dfrac{dv}{ds}$. By referring to the free-body diagram of the mine car shown in Fig. a,

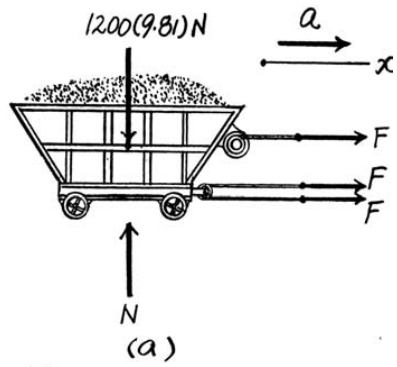

$$\xrightarrow{+} \Sigma F_x = ma_x; \qquad 3F = 1200\left(v\frac{dv}{ds}\right) \qquad \textbf{(1)}$$

Power:

$$P_{\text{out}} = 3\mathbf{F}\cdot\mathbf{v}$$

$$30(10^3) = 3Fv \qquad \textbf{(2)}$$

Substituting Eq. (1) into Eq. (2) yields

$$30(10^3) = 1200\left(v\frac{dv}{ds}\right)v$$

$$\int_0^v v^2 dv = \int_0^{30\text{ m}} 25ds$$

$$\left.\frac{v^3}{3}\right|_0^v = 25s\Big|_0^{30\text{ m}}$$

$$v = 13.1\text{ m/s} \qquad \textbf{Ans.}$$

© 2010 Pearson Education, Inc., Upper Saddle River, NJ. All rights reserved. This material is protected under all copyright laws as they currently exist. No portion of this material may be reproduced, in any form or by any means, without permission in writing from the publisher.

***14–60.** The 1.2-Mg mine car is being pulled by winch M mounted on the car. If the winch generates a constant power output of 30 kW, and the car starts from rest, determine the speed of the car when $t = 5$ s.

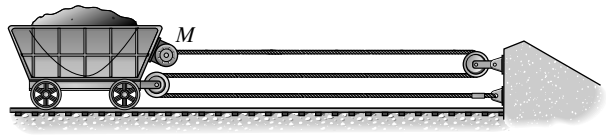

Equations of Motion: Here, $a = v\dfrac{dv}{ds}$. By referring to the free-body diagram of the mine car shown in Fig. a,

$$\overset{+}{\rightarrow} \Sigma F_x = ma_x; \qquad 3F = 1200\left(v\frac{dv}{ds}\right) \qquad \textbf{(1)}$$

Power:

$$P_{\text{out}} = 3\mathbf{F}\cdot\mathbf{v}$$

$$30(10^3) = 3Fv \qquad \textbf{(2)}$$

Substituting Eq. (1) into Eq. (2) yields

$$30(10^3) = \left(1200\frac{dv}{ds}\right)v$$

$$\int_0^v v\,dv = \int_0^{5\text{ s}} 25\,dt$$

$$\left.\frac{v^2}{2}\right|_0^v = 25t\Big|_0^{5\text{ s}}$$

$$v = 15.8\text{ m/s} \qquad \textbf{Ans.}$$

© 2010 Pearson Education, Inc., Upper Saddle River, NJ. All rights reserved. This material is protected under all copyright laws as they currently exist. No portion of this material may be reproduced, in any form or by any means, without permission in writing from the publisher.

•14–61. The 50-lb crate is hoisted by the motor M. If the crate starts from rest and by constant acceleration attains a speed of 12 ft/s after rising $s = 10$ ft, determine the power that must be supplied to the motor at the instant $s = 10$ ft. The motor has an efficiency $\epsilon = 0.65$. Neglect the mass of the pulley and cable.

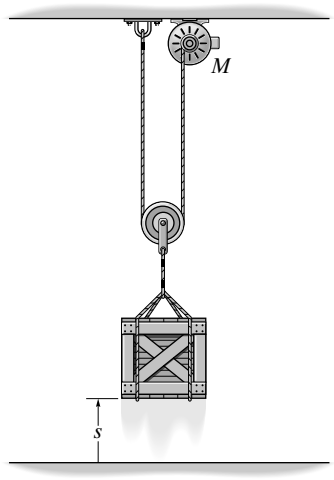

$+\uparrow \Sigma F_y = ma_y;$ $\qquad 2T - 50 = \dfrac{50}{32.2}a$

$(+\uparrow)\ v^2 = v_0^2 + 2\,a_c\,(s - s_0)$

$(12)^2 = 0 + 2(a)(10 - 0)$

$a = 7.20\ \text{ft/s}^2$

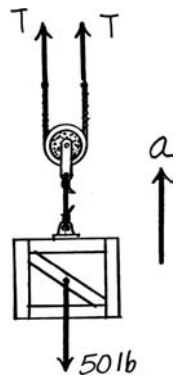

Thus, $T = 30.59$ lb

$s_C + (s_C - s_P) = l$

$2\,v_C = v_P$

$2(12) = v_P = 24$ ft/s

$P_o = 30.59(24) = 734.16$

$P_i = \dfrac{734.16}{0.65} = 1129.5\ \text{ft}\cdot\text{lb/s}$

$P_i = 2.05$ hp **Ans.**

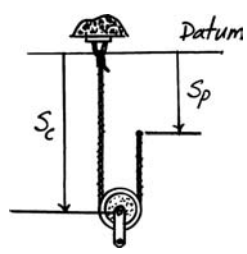

© 2010 Pearson Education, Inc., Upper Saddle River, NJ. All rights reserved. This material is protected under all copyright laws as they currently exist. No portion of this material may be reproduced, in any form or by any means, without permission in writing from the publisher.

14–62. A motor hoists a 60-kg crate at a constant velocity to a height of $h = 5$ m in 2 s. If the indicated power of the motor is 3.2 kW, determine the motor's efficiency.

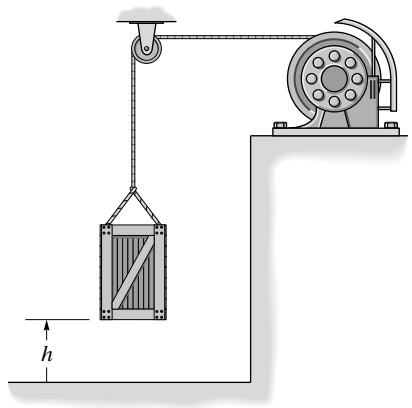

Equations of Motion:

$$+\uparrow \Sigma F_y = ma_y; \qquad F - 60(9.81) = 60(0) \qquad F = 588.6 \text{ N}$$

Power: The crate travels at a constant speed of $v = \frac{5}{2} = 2.50$ m/s. The power output can be obtained using Eq. 14–10.

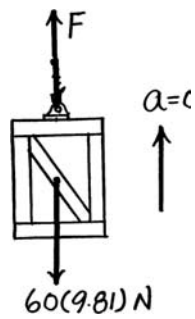

$$P = \mathbf{F} \cdot \mathbf{v} = 588.6\,(2.50) = 1471.5 \text{ W}$$

Thus, from Eq. 14–11, the efficiency of the motor is given by

$$\varepsilon = \frac{\text{power output}}{\text{power input}} = \frac{1471.5}{3200} = 0.460 \qquad \textbf{Ans.}$$

14–63. If the jet on the dragster supplies a constant thrust of $T = 20$ kN, determine the power generated by the jet as a function of time. Neglect drag and rolling resistance, and the loss of fuel. The dragster has a mass of 1 Mg and starts from rest.

Equations of Motion: By referring to the free-body diagram of the dragster shown in Fig. *a*,

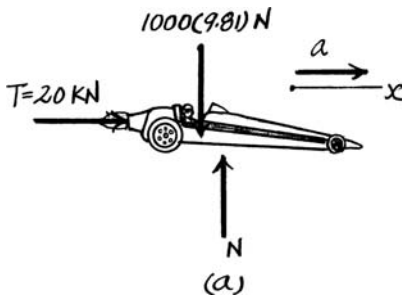

$$\overset{+}{\rightarrow} \Sigma F_x = ma_x; \qquad 20(10^3) = 1000(a) \qquad a = 20 \text{ m/s}^2$$

Kinematics: The velocity of the dragster can be determined from

$$\left(\overset{+}{\rightarrow}\right) \qquad v = v_0 + a_c t$$

$$v = 0 + 20t = (20t) \text{ m/s}$$

Power:

$$P = \mathbf{F} \cdot \mathbf{v} = 20(10^3)(20t)$$

$$= \left[400(10^3)t\right] \text{ W} \qquad \textbf{Ans.}$$

© 2010 Pearson Education, Inc., Upper Saddle River, NJ. All rights reserved. This material is protected under all copyright laws as they currently exist. No portion of this material may be reproduced, in any form or by any means, without permission in writing from the publisher.

***14–64.** Sand is being discharged from the silo at A to the conveyor and transported to the storage deck at the rate of 360 000 lb/h. An electric motor is attached to the conveyor to maintain the speed of the belt at 3 ft/s. Determine the average power generated by the motor.

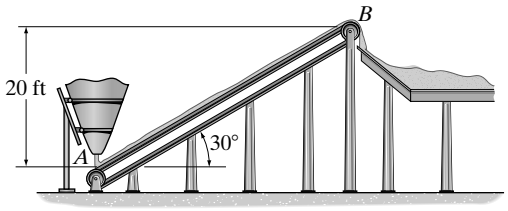

Equations of Motion: The time required for the conveyor to move from point A point B is $t_{AB} = \frac{s_{AB}}{v} = \frac{20/\sin 30°}{3} = 13.33$ s. Thus, the weight of the sand on the conveyor at any given instant is $W = (360\,000 \text{ lb/h})\left(\frac{1 \text{ h}}{3600 \text{ s}}\right)(13.33 \text{ s}) = 1333.33$ lb.

By referring to the free-body diagram of the sand shown in Fig. a,

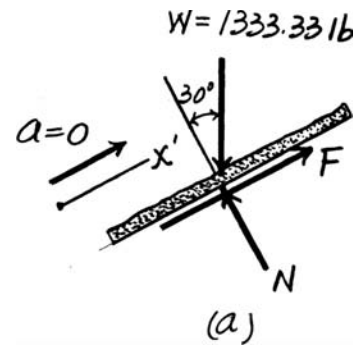

$$+\nearrow \Sigma F_{x'} = ma_{x'}; \qquad F - 1333.3 \sin 30° = \frac{1333.33}{32.2}(0)$$

$$F = 666.67 \text{ lb}$$

Power: Using the result of **F**,

$$P = \mathbf{F} \cdot \mathbf{v} = 666.67(3) = 2000 \text{ ft} \cdot \text{lb/s}$$

Thus,

$$P = (2000 \text{ ft} \cdot \text{lb/s})\left(\frac{1 \text{ hp}}{550 \text{ ft} \cdot \text{lb/s}}\right) = 3.64 \text{ hp} \qquad \textbf{Ans.}$$

Note that P can also be determined in a more direct manner using

$$P_{\text{out}} = \frac{dW}{dt}(h) = \left(360\,000 \frac{\text{lb}}{\text{h}}\right)\left(\frac{1 \text{ h}}{3600 \text{ s}}\right)(20 \text{ ft}) = 2000 \text{ ft} \cdot \text{lb/s}$$

14–65. The 500-kg elevator starts from rest and travels upward with a constant acceleration $a_c = 2 \text{ m/s}^2$. Determine the power output of the motor M when $t = 3$ s. Neglect the mass of the pulleys and cable.

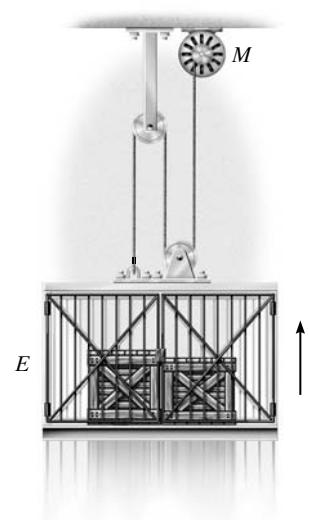

$$+\uparrow \Sigma F_y = m\,a_y; \qquad 3T - 500(9.81) = 500(2)$$

$$T = 1968.33 \text{ N}$$

$$3s_E - s_P = l$$

$$3\,v_E = v_P$$

When $t = 3$ s,

$$(+\uparrow)\ v_0 + a_c t$$

$$v_E = 0 + 2(3) = 6 \text{ m/s}$$

$$v_P = 3(6) = 18 \text{ m/s}$$

$$P_O = 1968.33(18)$$

$$P_O = 35.4 \text{ kW} \qquad \textbf{Ans.}$$

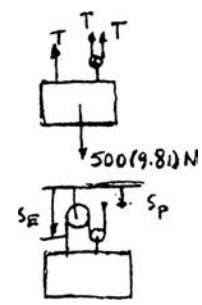

© 2010 Pearson Education, Inc., Upper Saddle River, NJ. All rights reserved. This material is protected under all copyright laws as they currently exist. No portion of this material may be reproduced, in any form or by any means, without permission in writing from the publisher.

14–66. A rocket having a total mass of 8 Mg is fired vertically from rest. If the engines provide a constant thrust of $T = 300$ kN, determine the power output of the engines as a function of time. Neglect the effect of drag resistance and the loss of fuel mass and weight.

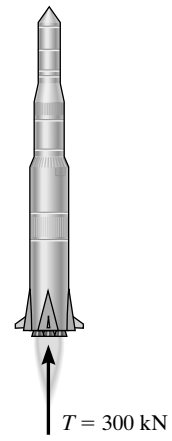

$+\uparrow \Sigma F_y = ma_y;\qquad 300(10^3) - 8(10^3)(9.81) = 8(10^3)a \qquad a = 27.69\ \text{m/s}^2$

$(+\uparrow)\qquad v = v_0 + a_c t$

$\qquad = 0 + 27.69t = 27.69t$

$P = \mathbf{T}\cdot\mathbf{v} = 300\,(10^3)\,(27.69t) = 8.31\,t\ \text{MW}$ **Ans.**

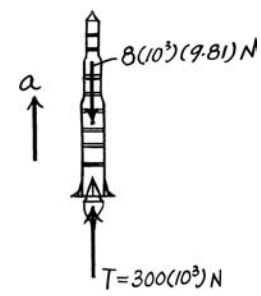

14–67. The crate has a mass of 150 kg and rests on a surface for which the coefficients of static and kinetic friction are $\mu_s = 0.3$ and $\mu_k = 0.2$, respectively. If the motor M supplies a cable force of $F = (8t^2 + 20)$ N, where t is in seconds, determine the power output developed by the motor when $t = 5$ s.

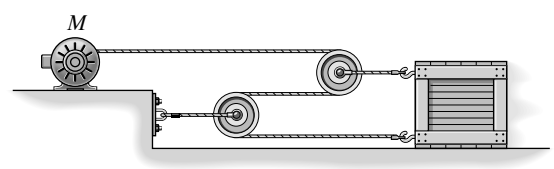

Equations of Equilibrium: If the crate is on the verge of slipping, $F_f = \mu_s N = 0.3N$. From FBD(a),

$+\uparrow \Sigma F_y = 0;\qquad N - 150(9.81) = 0 \qquad N = 1471.5\ \text{N}$

$\overset{+}{\rightarrow} \Sigma F_x = 0;\qquad 0.3(1471.5) - 3\left(8t^2 + 20\right) = 0 \qquad t = 3.9867\ \text{s}$

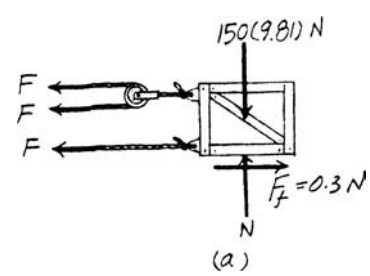

Equations of Motion: Since the crate moves 3.9867 s later, $F_f = \mu_k N = 0.2N$. From FBD(b),

$+\uparrow \Sigma F_y = ma_y;\qquad N - 150(9.81) = 150\,(0) \qquad N = 1471.5\ \text{N}$

$\overset{+}{\rightarrow} \Sigma F_x = ma_x;\qquad 0.2\,(1471.5) - 3\left(8t^2 + 20\right) = 150\,(-a)$

$$a = \left(0.160t^2 - 1.562\right)\ \text{m/s}^2$$

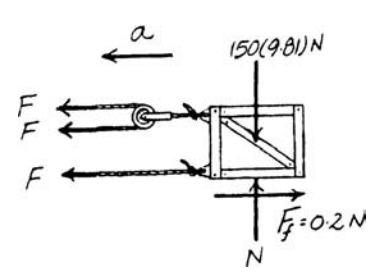

Kinematics: Applying $dv = a\,dt$, we have

$$\int_0^v dv = \int_{3.9867\ \text{s}}^{5} \left(0.160t^2 - 1.562\right) dt$$

$$v = 1.7045\ \text{m/s}$$

Power: At $t = 5$ s, $F = 8\left(5^2\right) + 20 = 220$ N. The power can be obtained using Eq. 14–10.

$P = \mathbf{F}\cdot\mathbf{v} = 3\,(220)\,(1.7045) = 1124.97\ \text{W} = 1.12\ \text{kW}$ **Ans.**

© 2010 Pearson Education, Inc., Upper Saddle River, NJ. All rights reserved. This material is protected under all copyright laws as they currently exist. No portion of this material may be reproduced, in any form or by any means, without permission in writing from the publisher.

***14–68.** The 50-lb block rests on the rough surface for which the coefficient of kinetic friction is $\mu_k = 0.2$. A force $F = (40 + s^2)$ lb, where s is in ft, acts on the block in the direction shown. If the spring is originally unstretched ($s = 0$) and the block is at rest, determine the power developed by the force the instant the block has moved $s = 1.5$ ft.

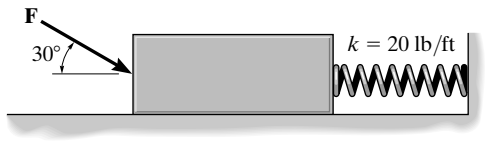

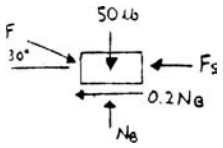

$+\uparrow \Sigma F_y = 0; \qquad N_B - \left(40 + s^2\right)\sin 30° - 50 = 0$

$N_B = 70 + 0.5s^2$

$T_1 + \Sigma U_{1-2} + T_2$

$$0 + \int_0^{1.5} \left(40 + s^2\right)\cos 30°\, ds - \frac{1}{2}(20)(1.5)^2 - 0.2\int_0^{1.5}\left(70 + 0.5s^2\right) ds = \frac{1}{2}\left(\frac{50}{32.2}\right)v_2^2$$

$0 + 52.936 - 22.5 - 21.1125 = 0.7764\, v_2^2$

$v_2 = 3.465$ ft/s

When $s = 1.5$ ft,

$F = 40 + (1.5)^2 = 42.25$ lb

$P = \mathbf{F}\cdot\mathbf{v} = (42.25\cos 30°)(3.465)$

$P = 126.79$ ft · lb/s $= 0.231$ hp **Ans.**

•14–69. Using the biomechanical power curve shown, determine the maximum speed attained by the rider and his bicycle, which have a total mass of 92 kg, as the rider ascends the 20° slope starting from rest.

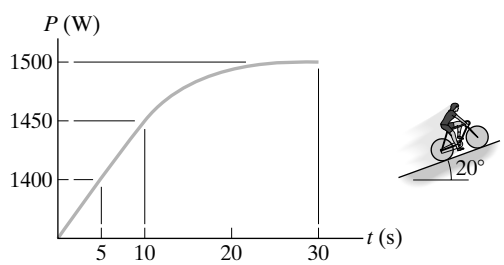

$F = 92(9.81)\sin 20° = 308.68$ N

$P = \mathbf{F}\cdot\mathbf{v}; \qquad 1500 = 308.68\, v$

$v = 4.86$ m/s **Ans.**

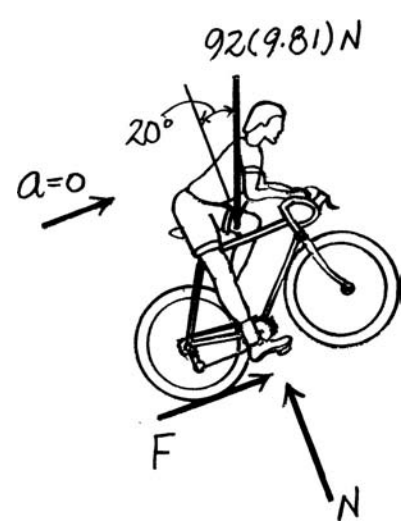

© 2010 Pearson Education, Inc., Upper Saddle River, NJ. All rights reserved. This material is protected under all copyright laws as they currently exist. No portion of this material may be reproduced, in any form or by any means, without permission in writing from the publisher.

14–70. The 50-kg crate is hoisted up the 30° incline by the pulley system and motor M. If the crate starts from rest and, by constant acceleration, attains a speed of 4 m/s after traveling 8 m along the plane, determine the power that must be supplied to the motor at the instant the crate has moved 8 m. Neglect friction along the plane. The motor has an efficiency of $\epsilon = 0.74$.

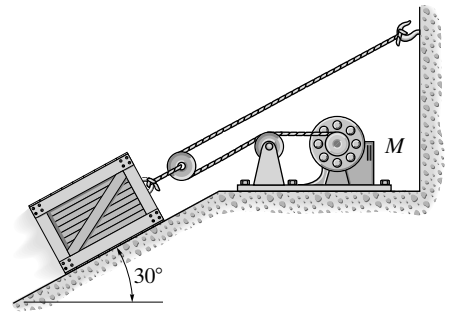

Kinematics: Applying equation $v^2 = v_0^2 + 2a_c(s - s_0)$, we have

$$4^2 = 0^2 + 2a(8 - 0) \qquad a = 1.00 \text{ m/s}^2$$

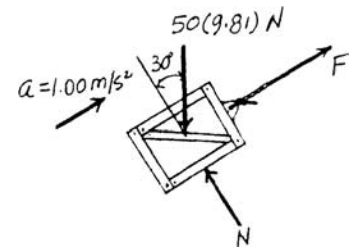

Equations of Motion:

$$+\Sigma F_{x'} = ma_{x'}; \qquad F - 50(9.81)\sin 30° = 50(1.00) \qquad F = 295.25 \text{ N}$$

Power: The power output at the instant when $v = 4$ m/s can be obtained using Eq. 14–10.

$$P = \mathbf{F}\cdot\mathbf{v} = 295.25\,(4) = 1181 \text{ W} = 1.181 \text{ kW}$$

Using Eq. 14–11, the required power input to the motor in order to provide the above power output is

$$\text{power input} = \frac{\text{power output}}{\varepsilon}$$

$$= \frac{1.181}{0.74} = 1.60 \text{ kW} \qquad \textbf{Ans.}$$

14–71. Solve Prob. 14–70 if the coefficient of kinetic friction between the plane and the crate is $\mu_k = 0.3$.

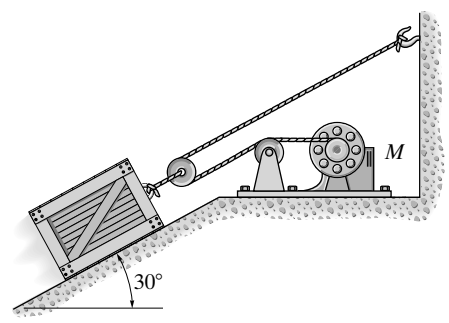

Kinematics: Applying equation $v^2 = v_0^2 + 2a_c(s - s_0)$, we have

$$4^2 = 0^2 + 2a(8 - 0) \qquad a = 1.00 \text{ m/s}^2$$

Equations of Motion:

$$+\Sigma F_{y'} = ma_{y'}; \qquad N - 50(9.81)\cos 30° = 50(0) \qquad N = 424.79 \text{ N}$$

$$+\Sigma F_{x'} = ma_{x'}; \qquad F - 0.3\,(424.79) - 50(9.81)\sin 30° = 50(1.00)$$

$$F = 422.69 \text{ N}$$

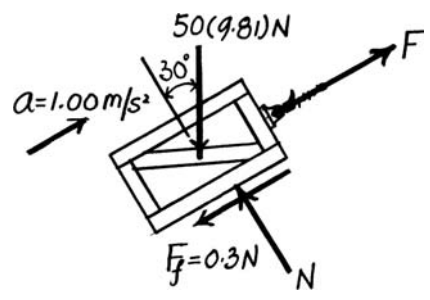

Power: The power output at the instant when $v = 4$ m/s can be obtained using Eq. 14–10.

$$P = \mathbf{F}\cdot\mathbf{v} = 422.69\,(4) = 1690.74 \text{ W} = 1.691 \text{ kW}$$

Using Eq. 14–11, the required power input to the motor to provide the above power output is

$$\text{power input} = \frac{\text{power output}}{\varepsilon}$$

$$= \frac{1.691}{0.74} = 2.28 \text{ kW} \qquad \textbf{Ans.}$$

© 2010 Pearson Education, Inc., Upper Saddle River, NJ. All rights reserved. This material is protected under all copyright laws as they currently exist. No portion of this material may be reproduced, in any form or by any means, without permission in writing from the publisher.

***14–72.** Solve Prob. 14–12 using the conservation of energy equation.

Put Datum at center of block at lowest point.

$$T_1 + V_1 = T_2 + V_2$$

$$0 + 10(60 + y) = 0 + \left[\frac{1}{2}(30)y^2\right] + \left[\frac{1}{2}(45)(y - 3)^2\right] = 0$$

$$37.5y^2 - 145y - 397.5 = 0$$

Solving for the positive root of the above equation,

$$y = 5.720 \text{ in.}$$

Thus,

$s_1 = 5.72$ in. $\qquad s_2 = 5.720 - 3 = 2.72$ in. **Ans.**

•14–73. Solve Prob. 14–7 using the conservation of energy equation.

Datum at B:

$$T_A + V_A = T_B + V_B$$

$$0 + 6(2) = 0 + \frac{1}{2}(5)(12)(x)^2$$

$x = 0.6325$ ft $= 7.59$ in. **Ans.**

14–74. Solve Prob. 14–8 using the conservation of energy equation.

The spring has an initial and final compression of $s_1 = 0.1 - 0.05 = 0.05$ m and $s_2 = 0.1 - (0.05 + 0.0125) = 0.0375$ m.

$$T_1 + V_1 = T_2 + V_2$$

$$0 + \left[\frac{1}{2}ks_1{}^2\right] + \left[-Wh\right] = \frac{1}{2}mv_A{}^2 + \frac{1}{2}ks_2{}^2 + 0$$

$$0 + \left[\frac{1}{2}(2000)(0.05)^2\right] = \frac{1}{2}(0.02)v_A{}^2 + \frac{1}{2}(2000)(0.0375^2)$$

$v_A = 10.5$ m/s **Ans.**

14–75. Solve Prob. 14–18 using the conservation of energy equation.

$$T_1 + V_1 = T_2 + V_2$$

$$0 + \frac{1}{2}(100)(0.5)^2 + \frac{1}{2}(50)(0.5)^2 = \frac{1}{2}(20)v^2 + 0$$

$v = 1.37$ m/s **Ans.**

© 2010 Pearson Education, Inc., Upper Saddle River, NJ. All rights reserved. This material is protected under all copyright laws as they currently exist. No portion of this material may be reproduced, in any form or by any means, without permission in writing from the publisher.

***14–76.** Solve Prob. 14–22 using the conservation of energy equation.

Datum at A

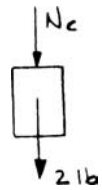

$$T_A + V_A = T_B + V_B$$

$$\frac{1}{2}\left(\frac{2}{32.2}\right)(30)^2 + 0 = \frac{1}{2}\left(\frac{2}{32.2}\right)v_B^2 + 2(5)$$

$v_B = 24.042 = 24.0$ ft/s **Ans.**

$$\overset{+}{\rightarrow}\Sigma F_n = ma_n; \qquad N_B = \left(\frac{2}{32.2}\right)\left(\frac{(24.042)^2}{5}\right)$$

$N_B = 7.18$ lb **Ans.**

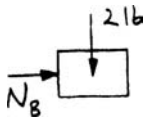

$$T_A + V_A = T_C + V_C$$

$$\frac{1}{2}\left(\frac{2}{32.2}\right)(30)^2 + 0 = \frac{1}{2}\left(\frac{2}{32.2}\right)v_C^2 + 2(10)$$

$v_C = 16.0$ ft/s **Ans.**

$$+\downarrow\Sigma F_n = ma_n; \qquad N_C + 2 = \left(\frac{2}{32.2}\right)\left(\frac{(16.0)^2}{5}\right)$$

$N_C = 1.18$ lb **Ans.**

•14–77. Each of the two elastic rubber bands of the slingshot has an unstretched length of 200 mm. If they are pulled back to the position shown and released from rest, determine the speed of the 25-g pellet just after the rubber bands become unstretched. Neglect the mass of the rubber bands. Each rubber band has a stiffness of $k = 50$ N/m.

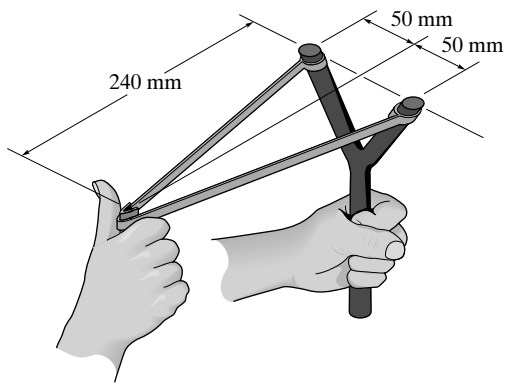

$$T_1 + V_1 = T_2 + V_2$$

$$0 + (2)\left(\frac{1}{2}\right)(50)[\sqrt{(0.05)^2 + (0.240)^2} - 0.2]^2 = \frac{1}{2}(0.025)v^2$$

$v = 2.86$ m/s **Ans.**

© 2010 Pearson Education, Inc., Upper Saddle River, NJ. All rights reserved. This material is protected under all copyright laws as they currently exist. No portion of this material may be reproduced, in any form or by any means, without permission in writing from the publisher.

14–78. Each of the two elastic rubber bands of the slingshot has an unstretched length of 200 mm. If they are pulled back to the position shown and released from rest, determine the maximum height the 25-g pellet will reach if it is fired vertically upward. Neglect the mass of the rubber bands and the change in elevation of the pellet while it is constrained by the rubber bands. Each rubber band has a stiffness $k = 50$ N/m.

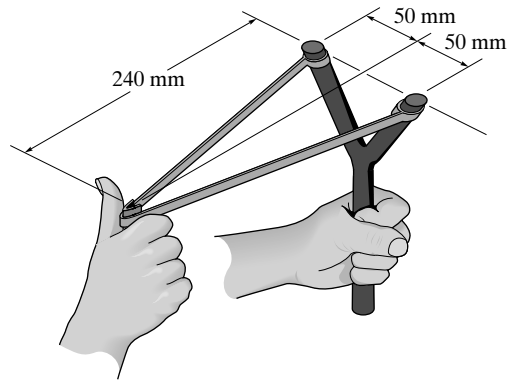

$$T_1 + V_1 = T_2 + V_2$$

$$0 + 2\left(\frac{1}{2}\right)(50)[\sqrt{(0.05)^2 + (0.240)^2} - 0.2]^2 = 0 + 0.025(9.81)h$$

$$h = 0.416 \text{ m} = 416 \text{ mm}$$ **Ans.**

14–79. Block A has a weight of 1.5 lb and slides in the smooth horizontal slot. If the block is drawn back to $s = 1.5$ ft and released from rest, determine its speed at the instant $s = 0$. Each of the two springs has a stiffness of $k = 150$ lb/ft and an unstretched length of 0.5 ft.

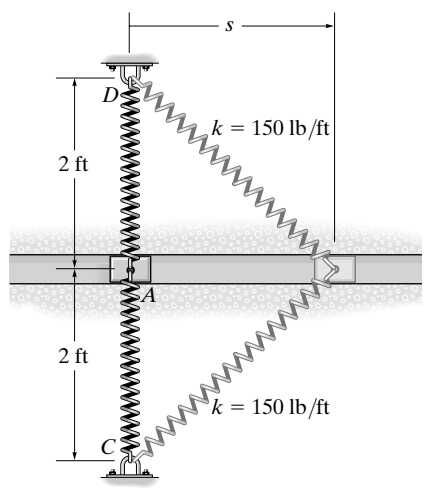

$$T_1 + V_1 = T_2 + V_2$$

$$0 + 2\left[\frac{1}{2}(150)\left(\sqrt{(2)^2 + (1.5)^2} - 0.5\right)^2\right] = \frac{1}{2}\left(\frac{1.5}{32.2}\right)(v_2)^2 + 2\left[\frac{1}{2}(150)(2 - 0.5)^2\right]$$

$$v_2 = 106 \text{ ft/s}$$ **Ans.**

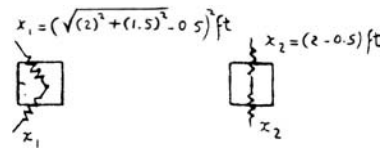

© 2010 Pearson Education, Inc., Upper Saddle River, NJ. All rights reserved. This material is protected under all copyright laws as they currently exist. No portion of this material may be reproduced, in any form or by any means, without permission in writing from the publisher.

***14–80.** The 2-lb block A slides in the smooth horizontal slot. When $s = 0$ the block is given an initial velocity of 60 ft/s to the right. Determine the maximum horizontal displacement s of the block. Each of the two springs has a stiffness of $k = 150$ lb/ft and an unstretched length of 0.5 ft.

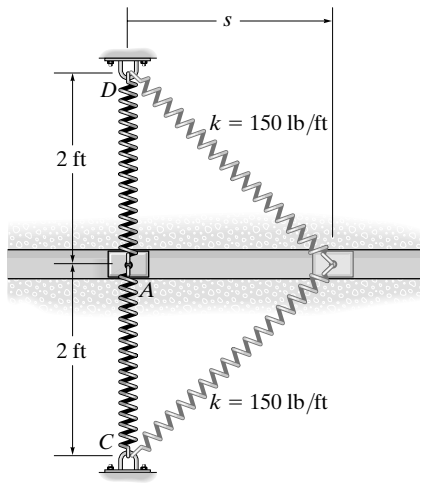

$$T_1 + V_1 = T_2 + V_2$$

$$\frac{1}{2}\left(\frac{2}{32.2}\right)(60)^2 + 2\left[\frac{1}{2}(150)(2 - 0.5)^2\right] = 0 + 2\left[\frac{1}{2}(150)\left(\sqrt{(2)^2 + s^2} - 0.5\right)^2\right]$$

Set $d = \sqrt{(2)^2 + s^2}$ then

$$d^2 - d - 2.745 = 0$$

Solving for the positive root,

$$d = 2.231$$

$$(2.231)^2 = (2)^2 + s^2$$

$$s = 0.988 \text{ ft}$$ **Ans.**

•14–81. The 30-lb block A is placed on top of two nested springs B and C and then pushed down to the position shown. If it is then released, determine the maximum height h to which it will rise.

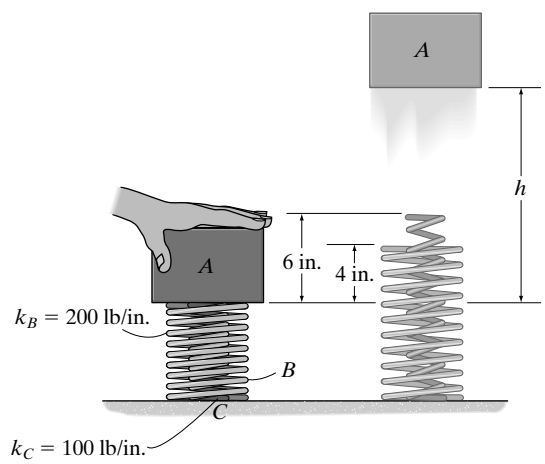

Conservation of Energy:

$$T_1 + V_1 = T_2 + V_2$$

$$\frac{1}{2}mv_1 + \left[\left(V_g\right)_1 + \left(V_e\right)_1\right] = \frac{1}{2}mv_2 + \left[\left(V_g\right)_2 + \left(V_e\right)_2\right]$$

$$0 + 0 + \frac{1}{2}(200)(4)^2 + \frac{1}{2}(100)(6)^2 = 0 + h(30) + 0$$

$$h = 113 \text{ in.}$$ **Ans.**

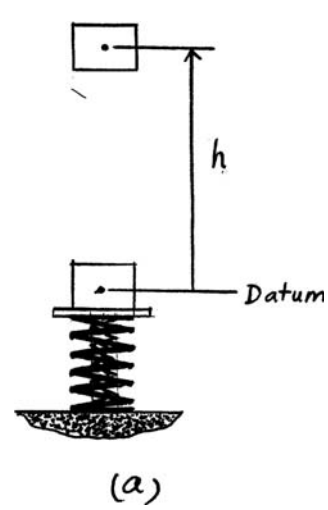

© 2010 Pearson Education, Inc., Upper Saddle River, NJ. All rights reserved. This material is protected under all copyright laws as they currently exist. No portion of this material may be reproduced, in any form or by any means, without permission in writing from the publisher.

14–82. The spring is unstretched when $s = 1\,\text{m}$ and the 15-kg block is released from rest at this position. Determine the speed of the block when $s = 3\,\text{m}$. The spring remains horizontal during the motion, and the contact surfaces between the block and the inclined plane are smooth.

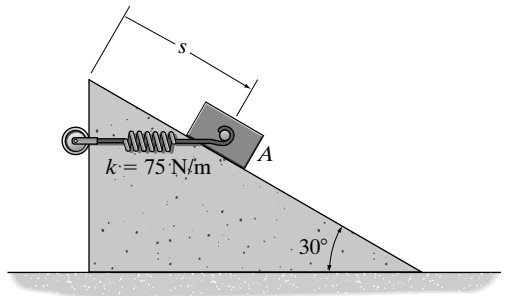

Potential Energy: With reference to the datum set in Fig. *a,* the gravitational potential energy of the block at positions (1) and (2) are $(V_g)_1 = mgh_1 = 15(9.81)(0) = 0$ and $(V_g)_2 = mgh_2 = 15(9.81)[-2\sin 30°] = -147.15$ J. When the block is at position (1) the spring is unstretched. Thus, the elastic potential energy of the spring at this instant is $(V_e)_1 = \frac{1}{2}ks_1{}^2 = 0$. The spring is stretched $s_2 = 2\cos 30°$ m when the block is at position (2). Thus, $(V_e)_2 = \frac{1}{2}ks_2{}^2 = \frac{1}{2}(75)(2\cos 30°)^2 = 112.5$ J since it is being stretched $s_2 = x$.

Conservation of Energy:

$$T_1 + V_1 = T_2 + V_2$$

$$\frac{1}{2}mv_1{}^2 + \left[\left(V_g\right)_1 + \left(V_e\right)_1\right] = \frac{1}{2}mv_2{}^2 + \left[\left(V_g\right)_2 + \left(V_e\right)_2\right]$$

$$0 + (0 + 0) = \frac{1}{2}(15)v_2{}^2 + [-147.15 + 112.5]$$

$$v_2 = 2.15\ \text{m/s}$$ **Ans.**

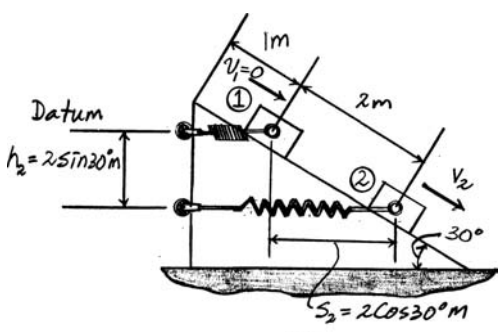

(a)

© 2010 Pearson Education, Inc., Upper Saddle River, NJ. All rights reserved. This material is protected under all copyright laws as they currently exist. No portion of this material may be reproduced, in any form or by any means, without permission in writing from the publisher.

14–83. The vertical guide is smooth and the 5-kg collar is released from rest at A. Determine the speed of the collar when it is at position C. The spring has an unstretched length of 300 mm.

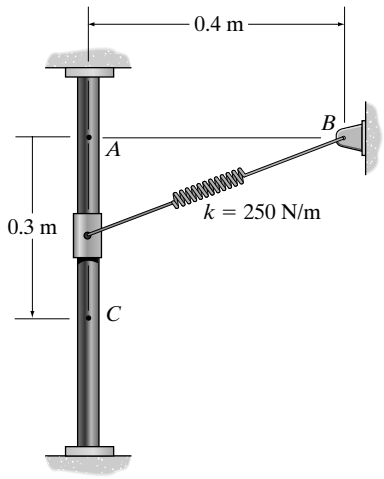

Potential Energy: With reference to the datum set in Fig. a, the gravitational potential energy of the collar at positions A and C are $(V_g)_A = mgh_A = 5(9.81)(0) = 0$ and $(V_g)_C = mgh_C = 5(9.81)(-0.3) = -14.715$ J. When the collar is at positions A and C, the spring stretches $s_A = 0.4 - 0.3 = 0.1$ m and $s_C = \sqrt{0.4^2 + 0.3^2} - 0.3 = 0.2$ m. The elastic potential energy of the spring when the collar is at these two positions are $(V_e)_A = \frac{1}{2}ks_A{}^2 = \frac{1}{2}(250)(0.1^2) = 1.25$ J and $(V_e)_C = \frac{1}{2}ks_C{}^2 = \frac{1}{2}(250)(0.2^2) = 5$ J.

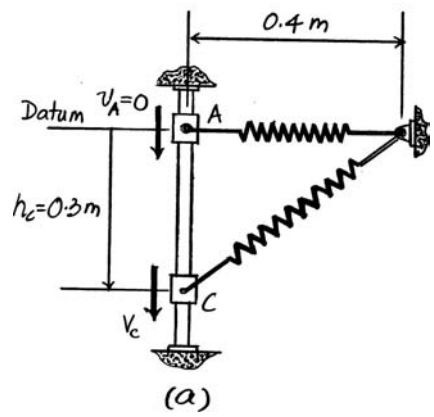

Conservation of Energy:

$$T_A + V_A = T_C + V_C$$

$$\frac{1}{2}mv_A{}^2 + \left[(V_g)_A + (V_e)_A\right] = \frac{1}{2}mv_C{}^2 + \left[(V_g)_C + (V_e)_C\right]$$

$$0 + (0 + 1.25) = \frac{1}{2}(5)v_C{}^2 + (-14.715 + 5)$$

$$v_C = 2.09 \text{ m/s}$$ **Ans.**

***14–84.** The 5-kg collar slides along the smooth vertical rod. If the collar is nudged from rest at A, determine its speed when it passes point B. The spring has an unstretched length of 200 mm.

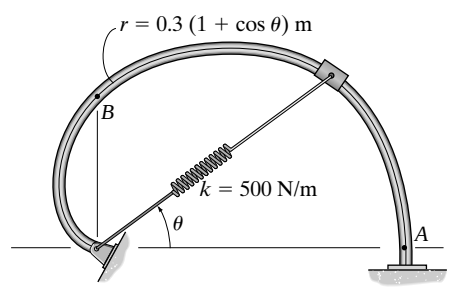

Potential Energy: With reference to the datum set in Fig. a, the gravitational potential energy of the collar at positions A and B are $(V_g)_A = mgh_A = 5(9.81)(0) = 0$ and $(V_g)_B = mgh_B = 5(9.81)(0.3) = 14.715$ J. The spring stretches $s_A = 0.6 - 0.2 = 0.4$ m and $s_B = 0.3 - 0.2 = 0.1$ m when the collar is at positions A and B, respectively. Thus, the elastic potential energy of the spring when the collar is at these two positions are $(V_e)_A = \frac{1}{2}ks_A{}^2 = \frac{1}{2}(500)(0.4^2) = 40$ J and $(V_e)_B = \frac{1}{2}ks_B{}^2 = \frac{1}{2}(500)(0.1^2) = 2.5$ J.

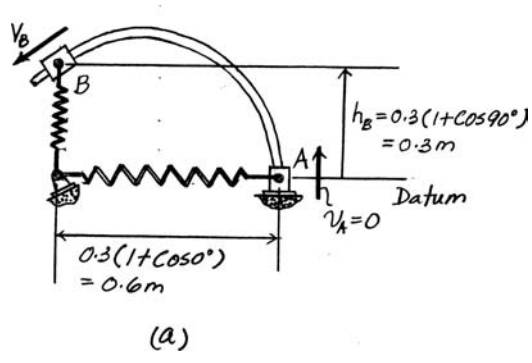

Conservation of Energy:

$$T_A + V_A = T_B + V_B$$

$$\frac{1}{2}mv_A{}^2 + \left[\left(V_g\right)_A + \left(V_e\right)_A\right] = \frac{1}{2}mv_B{}^2 + \left[\left(V_g\right)_B + \left(V_e\right)_B\right]$$

$$0 + (0 + 40) = \frac{1}{2}(5)v_B{}^2 + (14.715 + 2.5)$$

$$v_B = 3.02 \text{ m/s}$$ **Ans.**

© 2010 Pearson Education, Inc., Upper Saddle River, NJ. All rights reserved. This material is protected under all copyright laws as they currently exist. No portion of this material may be reproduced, in any form or by any means, without permission in writing from the publisher.

•14–85. The cylinder has a mass of 20 kg and is released from rest when $h = 0$. Determine its speed when $h = 3$ m. The springs each have an unstretched length of 2 m.

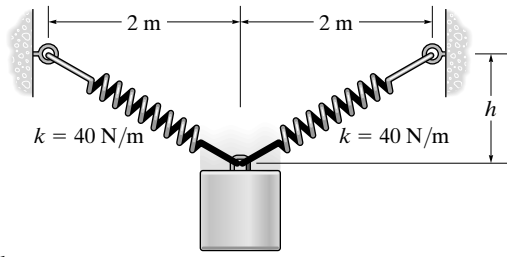

Potential Energy: Datum is set at the cylinder position when $h = 0$. When the cylinder moves to a position $h = 3$ m *below* the datum, its gravitational potential energy at this position is $20(9.81)(-3) = -588.6$ J. The initial and final elastic potential energy are $2\left[\frac{1}{2}(40)(2-2)^2\right] = 0$ and $2\left[\frac{1}{2}(40)\left(\sqrt{2^2+3^2}-2\right)^2\right] = 103.11$ J, respectively.

Conservation of Energy:

$$\Sigma T_1 + \Sigma V_1 = \Sigma T_2 + \Sigma V_2$$

$$0 + 0 = \frac{1}{2}(20)\,v^2 + 103.11 + (-588.6)$$

$$v = 6.97 \text{ m/s} \qquad \textbf{Ans.}$$

14–86. Tarzan has a mass of 100 kg and from rest swings from the cliff by rigidly holding on to the tree vine, which is 10 m measured from the supporting limb A to his center of mass. Determine his speed just after the vine strikes the lower limb at B. Also, with what force must he hold on to the vine just before and just after the vine contacts the limb at B?

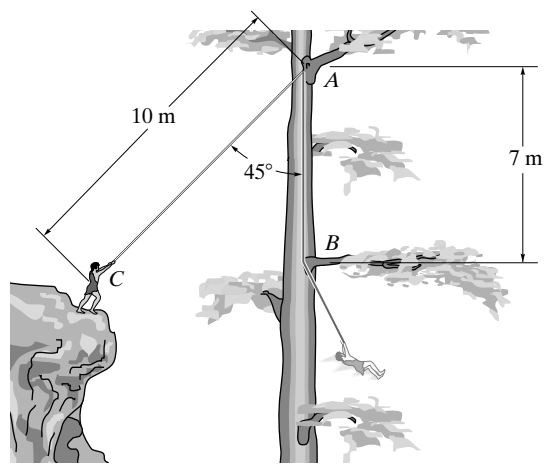

Datum at C

$$T_1 + V_1 = T_2 + V_2$$

$$0 + 0 = \frac{1}{2}(100)(v_C)^2 - 100(9.81)(10)(1 - \cos 45°)$$

$$v_C = 7.581 = 7.58 \text{ m/s} \qquad \textbf{Ans.}$$

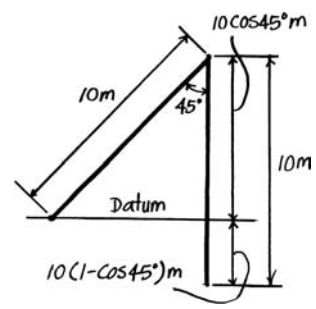

Just before striking B, $\rho = 10$ m:

$$+\uparrow \Sigma F_n = ma_n; \qquad T - 981 = 100\left(\frac{(7.581)^2}{10}\right)$$

$$T = 1.56 \text{ kN} \qquad \textbf{Ans.}$$

Just after striking B, $\rho = 3$ m:

$$+\uparrow \Sigma F_n = ma_n; \qquad T - 981 = 100\left(\frac{(7.581)^2}{3}\right)$$

$$T = 2.90 \text{ kN} \qquad \textbf{Ans.}$$

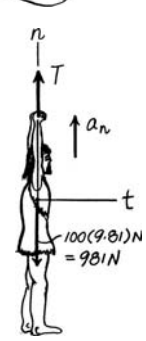

© 2010 Pearson Education, Inc., Upper Saddle River, NJ. All rights reserved. This material is protected under all copyright laws as they currently exist. No portion of this material may be reproduced, in any form or by any means, without permission in writing from the publisher.

14–87. The roller-coaster car has a mass of 800 kg, including its passenger, and starts from the top of the hill A with a speed $v_A = 3$ m/s. Determine the minimum height h of the hill so that the car travels around both inside loops without leaving the track. Neglect friction, the mass of the wheels, and the size of the car. What is the normal reaction on the car when the car is at B and at C?

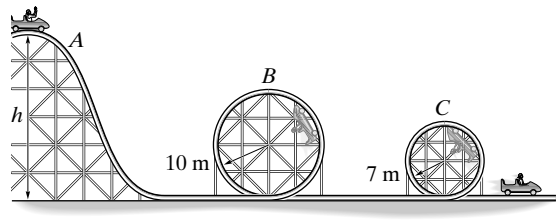

$$T_A + V_A = T_B + V_B$$

$$\frac{1}{2}(800)(3)^2 + 0 = \frac{1}{2}(800)(v_B^2) - 800(9.81)(h - 20)$$

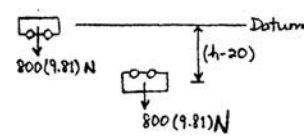

$$+\downarrow \Sigma F_n = m\,a_n; \qquad 800(9.81) = 800\left(\frac{v_B^2}{10}\right)$$

Thus,

$$v_B = 9.90 \text{ m/s}$$

$$h = 24.5 \text{ m} \qquad \textbf{Ans.}$$

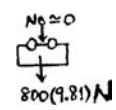

At B: $\quad N_B = 0 \quad$ (For h to be minimum.) **Ans.**

$$T_A + V_A = T_C + V_C$$

$$\frac{1}{2}(800)(3)^2 + 0 = \frac{1}{2}(800)(v_C)^2 - 800(9.81)(24.5 - 14)$$

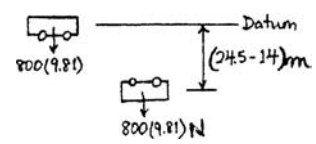

$$v_C = 14.69 \text{ m/s}$$

$$a_n = \frac{14.69^2}{7}$$

$$+\downarrow \Sigma F_n = m\,a_n; \qquad N_C + 800(9.81) = 800\left(\frac{14.69^2}{7}\right)$$

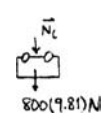

$$N_C = 16.8 \text{ kN} \qquad \textbf{Ans.}$$

© 2010 Pearson Education, Inc., Upper Saddle River, NJ. All rights reserved. This material is protected under all copyright laws as they currently exist. No portion of this material may be reproduced, in any form or by any means, without permission in writing from the publisher.

***14–88.** The roller-coaster car has a mass of 800 kg, including its passenger. If it is released from rest at the top of the hill A, determine the minimum height h of the hill so that the car travels around both inside loops without leaving the track. Neglect friction, the mass of the wheels, and the size of the car. What is the normal reaction on the car when the car is at B and at C?

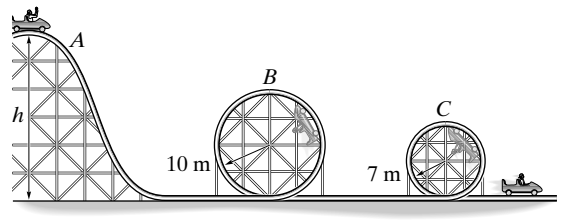

Since friction is neglected, the car will travel around the 7-m loop provided it first travels around the 10-m loop.

$$T_A + V_A = T_B + V_B$$

$$0 + 0 = \frac{1}{2}(800)(v_B^2) - 800(9.81)(h - 20)$$

$$+\downarrow \Sigma F_n = m\,a_n; \qquad 800(9.81) = 800\left(\frac{v_B^2}{10}\right)$$

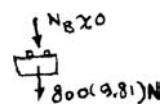

Thus,

$$v_B = 9.90 \text{ m/s}$$

$$h = 25.0 \text{ m} \qquad \textbf{Ans.}$$

At B: $\quad N_B = 0 \quad$ (For h to be minimum.) **Ans.**

$$T_A + V_A = T_C + V_C$$

$$0 + 0 = \frac{1}{2}(800)(v_C)^2 - 800(9.81)(25 - 14)$$

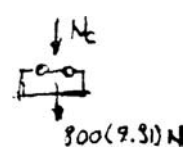

$$v_C = 14.69 \text{ m/s}$$

$$+\downarrow \Sigma F_n = m\,a_n; \qquad N_C + 800(9.81) = 800\left(\frac{(14.69)^2}{7}\right)$$

$$N_C = 16.8 \text{ kN} \qquad \textbf{Ans.}$$

© 2010 Pearson Education, Inc., Upper Saddle River, NJ. All rights reserved. This material is protected under all copyright laws as they currently exist. No portion of this material may be reproduced, in any form or by any means, without permission in writing from the publisher.

•14–89. The roller coaster and its passenger have a total mass m. Determine the smallest velocity it must have when it enters the loop at A so that it can complete the loop and not leave the track. Also, determine the normal force the tracks exert on the car when it comes around to the bottom at C. The radius of curvature of the tracks at B is ρ_B, and at C it is ρ_C. Neglect the size of the car. Points A and C are at the same elevation.

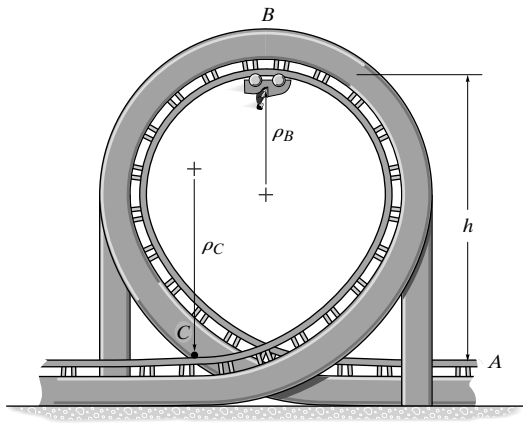

Equations of Motion: In order for the roller coaster to just pass point B without falling off the track, it is required that $N_B = 0$. Applying Eq. 13–8, we have

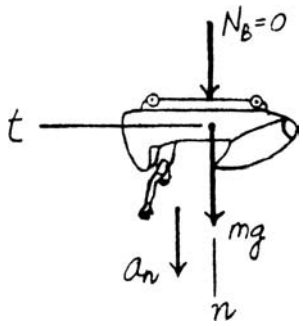

$$\Sigma F_n = ma_n; \qquad mg = m\left(\frac{v_B^2}{\rho_B}\right) \qquad v_B^2 = \rho_B\, g$$

Potential Energy: Datum is set at lowest point A. When the roller coaster is at point B, its position is h *above* the datum. Thus, the gravitational potential energy at this point is mgh.

Conservation of Energy: When the roller coaster travels from A to B, we have

$$T_A + V_A = T_B + V_B$$

$$\frac{1}{2}mv_A^2 + 0 = \frac{1}{2}m(\rho_B\, g) + mgh$$

$$v_A = \sqrt{\rho_B\, g + 2gh} \qquad \textbf{Ans.}$$

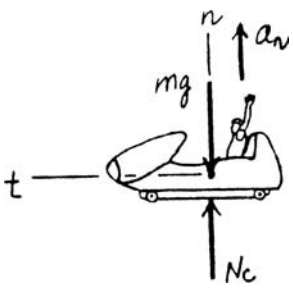

When the roller coaster travels from A to C, we have

$$T_A + V_A = T_C + V_C$$

$$\frac{1}{2}m(\rho_B\, g + 2gh) + 0 = \frac{1}{2}mv_C^2 + 0$$

$$v_C^2 = \rho_B\, g + 2gh$$

Equations of Motion:

$$\Sigma F_n = ma_n; \qquad N_C - mg = m\left(\frac{\rho_B\, g + 2gh}{\rho_C}\right)$$

$$N_C = \frac{mg}{\rho_C}(\rho_B + \rho_C + 2h) \qquad \textbf{Ans.}$$

© 2010 Pearson Education, Inc., Upper Saddle River, NJ. All rights reserved. This material is protected under all copyright laws as they currently exist. No portion of this material may be reproduced, in any form or by any means, without permission in writing from the publisher.

14–90. The 0.5-lb ball is shot from the spring device. The spring has a stiffness $k = 10$ lb/in. and the four cords C and plate P keep the spring compressed 2 in. when no load is on the plate. The plate is pushed back 3 in. from its initial position. If it is then released from rest, determine the speed of the ball when it reaches a position $s = 30$ in. on the smooth inclined plane.

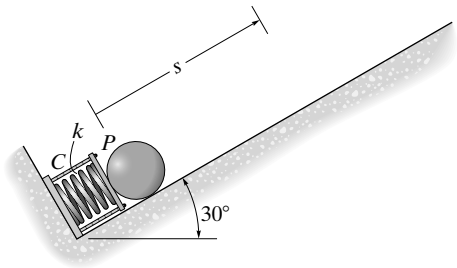

Potential Energy: The datum is set at the lowest point (compressed position). Finally, the ball is $\frac{30}{12}\sin 30° = 1.25$ ft *above* the datum and its gravitational potential energy is $0.5(1.25) = 0.625$ ft · lb. The initial and final elastic potential energy are $\frac{1}{2}(120)\left(\frac{2+3}{12}\right)^2 = 10.42$ ft · lb and $\frac{1}{2}(120)\left(\frac{2}{12}\right)^2 = 1.667$ ft · lb, respectively.

Conservation of Energy:

$$\Sigma T_1 + \Sigma V_1 = \Sigma T_2 + \Sigma V_2$$

$$0 + 10.42 = \frac{1}{2}\left(\frac{0.5}{32.2}\right)v^2 + 0.625 + 1.667$$

$$v = 32.3 \text{ ft/s} \qquad \textbf{Ans.}$$

14–91. The 0.5-lb ball is shot from the spring device shown. Determine the smallest stiffness k which is required to shoot the ball a maximum distance $s = 30$ in. up the plane after the spring is pushed back 3 in. and the ball is released from rest. The four cords C and plate P keep the spring compressed 2 in. when no load is on the plate.

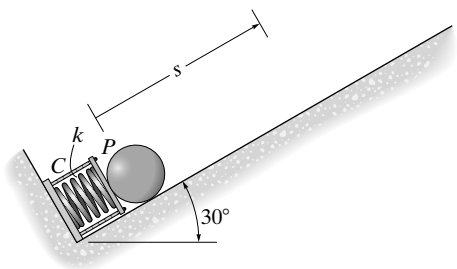

Potential Energy: The datum is set at the lowest point (compressed position). Finally, the ball is $\frac{30}{12}\sin 30° = 1.25$ ft *above* the datum and its gravitational potential energy is $0.5(1.25) = 0.625$ ft · lb. The initial and final elastic potential energy are $\frac{1}{2}(k)\left(\frac{2+3}{12}\right)^2 = 0.08681k$ and $\frac{1}{2}(k)\left(\frac{2}{12}\right)^2 = 0.01389k$, respectively.

Conservation of Energy:

$$\Sigma T_1 + \Sigma V_1 = \Sigma T_2 + \Sigma V_2$$

$$0 + 0.08681k = 0 + 0.625 + 0.01389k$$

$$k = 8.57 \text{ lb/ft} \qquad \textbf{Ans.}$$

© 2010 Pearson Education, Inc., Upper Saddle River, NJ. All rights reserved. This material is protected under all copyright laws as they currently exist. No portion of this material may be reproduced, in any form or by any means, without permission in writing from the publisher.

***14–92.** The roller coaster car having a mass m is released from rest at point A. If the track is to be designed so that the car does not leave it at B, determine the required height h. Also, find the speed of the car when it reaches point C. Neglect friction.

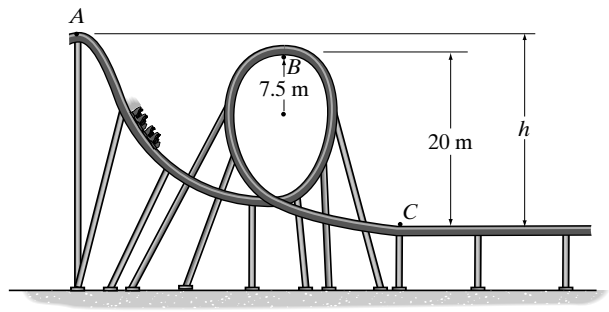

Equation of Motion: Since it is required that the roller coaster car is about to leave the track at B, $N_B = 0$. Here, $a_n = \frac{v_B{}^2}{\rho_B} = \frac{v_B{}^2}{7.5}$. By referring to the free-body diagram of the roller coaster car shown in Fig. a,

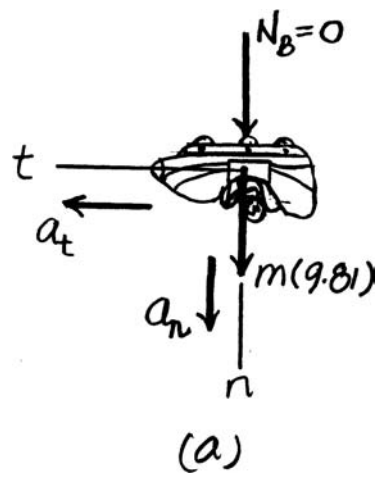

$$\Sigma F_n = ma_n; \qquad m(9.81) = m\left(\frac{v_B{}^2}{7.5}\right) \quad v_B{}^2 = 73.575 \text{ m}^2/\text{s}^2$$

Potential Energy: With reference to the datum set in Fig. b, the gravitational potential energy of the rollercoaster car at positions A, B, and C are $(V_g)_A = mgh_A = m(9.81)h = 9.81mh$, $(V_g)_B = mgh_B = m(9.81)(20) = 196.2$ m, and $(V_g)_C = mgh_C = m(9.81)(0) = 0$.

Conservation of Energy: Using the result of $v_B{}^2$ and considering the motion of the car from position A to B,

$$T_A + V_A = T_B + V_B$$

$$\frac{1}{2}mv_A{}^2 + (V_g)_A = \frac{1}{2}mv_B{}^2 + (V_g)_B$$

$$0 + 9.81mh = \frac{1}{2}m(73.575) + 196.2m$$

$$h = 23.75 \text{ m} \qquad \textbf{Ans.}$$

Also, considering the motion of the car from position B to C,

$$T_B + V_B = T_C + V_C$$

$$\frac{1}{2}mv_B{}^2 + (V_g)_B = \frac{1}{2}mv_C{}^2 + (V_g)_C$$

$$\frac{1}{2}m(73.575) + 196.2m = \frac{1}{2}mv_C{}^2 + 0$$

$$v_C = 21.6 \text{ m/s} \qquad \textbf{Ans.}$$

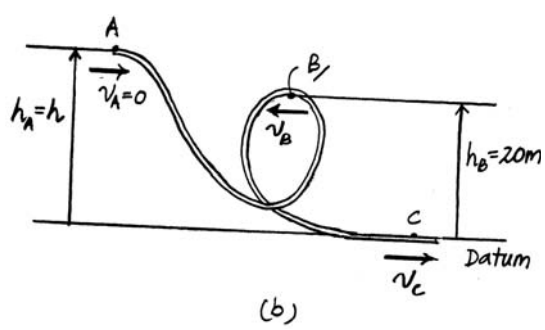

© 2010 Pearson Education, Inc., Upper Saddle River, NJ. All rights reserved. This material is protected under all copyright laws as they currently exist. No portion of this material may be reproduced, in any form or by any means, without permission in writing from the publisher.

•14–93. When the 50-kg cylinder is released from rest, the spring is subjected to a tension of 60 N. Determine the speed of the cylinder after it has fallen 200 mm. How far has it fallen when it momentarily stops?

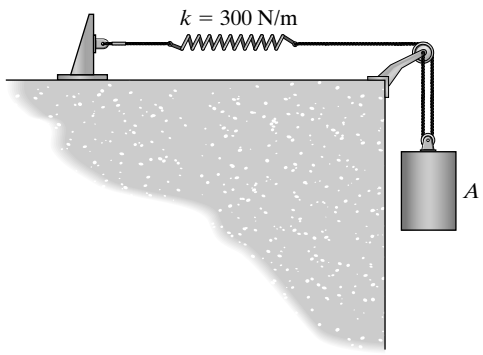

Kinematics: We can express the length of the cord in terms of the position coordinates s_A and s_P. By referring to Fig. *a*,

$$s_P + 2s_A = l$$

Thus,

$$\Delta s_P + 2\Delta s_A = 0 \qquad \textbf{(1)}$$

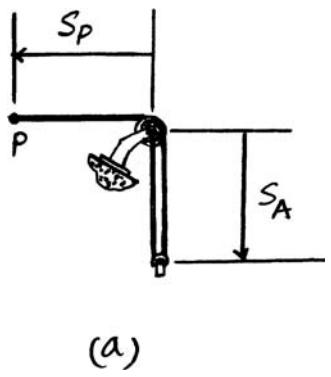

Potential Energy: By referring to the datum set in Fig. *b*, the gravitational potential energy of the cylinder at positions (1) and (2) are $(V_g)_1 = mgh_1 = 50(9.81)(0) = 0$ and $(V_g)_2 = mgh_2 = 50(9.81)(-\Delta s_A) = -490.5\Delta s_A$. When the cylinder is at positions (1) and (2), the stretch of the springs are $s_1 = \frac{F}{k} = \frac{60}{300} = 0.2$ m and $s_2 = s_1 + \Delta s_P = (0.2 + \Delta s_P)$ m. Thus, the elastic potential energy of the spring at these two instances are $(V_e)_1 = \frac{1}{2}ks_1{}^2 = \frac{1}{2}(300)(0.2^2) = 6$ J and

$$(V_e)_2 = \frac{1}{2}ks_2{}^2 = \frac{1}{2}(300)(0.2 + \Delta s_P)^2 = 150(0.2 + \Delta s_P)^2.$$

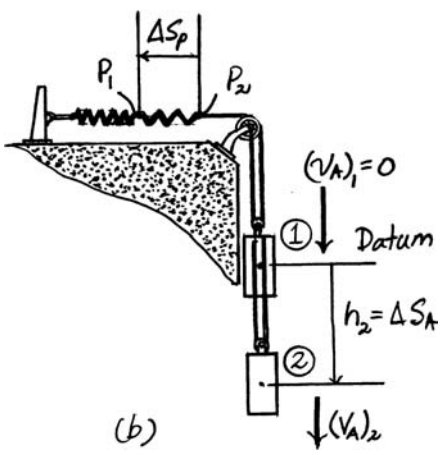

Conservation of Energy: For the case when $\Delta s_A = 0.2$ m, from Eq. (1), we obtain $\Delta s_P + 2(0.2) = 0$ or $\Delta s_P = -0.4$ m $= 0.4$ m $\rightarrow$. We have

$$T_1 + V_1 = T_2 + V_2$$

$$\frac{1}{2}m_A(v_A)_1{}^2 + \left[(V_g)_1 + (V_e)_1\right] = \frac{1}{2}m_A(v_A)_2{}^2 + \left[(V_g)_2 + (V_e)_2\right]$$

$$0 + (0 + 6) = \frac{1}{2}(50)(v_A)_2{}^2 + \left[-490.5(0.2) + 150(0.2 + 0.4)^2\right]$$

$$(v_A)_2 = 1.42 \text{ m/s} \qquad \textbf{Ans.}$$

For the case when the cylinder momentarily stops at position (2), from Eq. (1), $\Delta s_P = |-2\Delta s_A|$ Also, $(v_A)_2 = 0$.

$$T_1 + V_1 = T_2 + V_2$$

$$\frac{1}{2}m_A(v_A)_1{}^2 + \left[(V_g)_1 + (V_e)_1\right] = \frac{1}{2}m_A(v_A)_2{}^2 + \left[(V_g)_2 + (V_e)_2\right]$$

$$0 + (0 + 6) = 0 + \left[(-490.5\Delta s_A) + 150(0.2 + 2\Delta s_A)^2\right]$$

$$\Delta s_A = 0.6175 \text{ m} = 617.5 \text{ mm} \qquad \textbf{Ans.}$$

© 2010 Pearson Education, Inc., Upper Saddle River, NJ. All rights reserved. This material is protected under all copyright laws as they currently exist. No portion of this material may be reproduced, in any form or by any means, without permission in writing from the publisher.

14–94. A pan of negligible mass is attached to two identical springs of stiffness $k = 250$ N/m. If a 10-kg box is dropped from a height of 0.5 m above the pan, determine the maximum vertical displacement d. Initially each spring has a tension of 50 N.

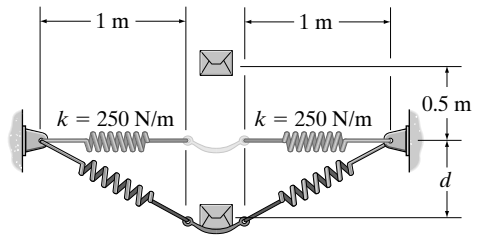

Potential Energy: With reference to the datum set in Fig. *a*, the gravitational potential energy of the box at positions (1) and (2) are $(V_g)_1 = mgh_1 = 10(9.81)(0) = 0$ and $(V_g)_2 = mgh_2 = 10(9.81)[-(0.5 + d)] = -98.1(0.5 + d)$. Initially, the spring stretches $s_1 = \frac{50}{250} = 0.2$ m. Thus, the unstretched length of the spring is $l_0 = 1 - 0.2 = 0.8$ m and the initial elastic potential of each spring is $(V_e)_1 = (2)\frac{1}{2}ks_1{}^2 = 2(250/2)(0.2^2) = 10$ J. When the box is at position (2), the spring stretches $s_2 = \left(\sqrt{d^2 + 1^2} - 0.8\right)$ m. The elastic potential energy of the springs when the box is at this position is

$$(V_e)_2 = (2)\frac{1}{2}ks_2{}^2 = 2(250/2)\left[\sqrt{d^2 + 1} - 0.8\right]^2 = 250\left(d^2 - 1.6\sqrt{d^2 + 1} + 1.64\right).$$

Conservation of Energy:

$$T_1 + V_1 + T_2 + V_2$$

$$\frac{1}{2}mv_1{}^2 + \left[\left(V_g\right)_1 + (V_e)_1\right] = \frac{1}{2}mv_2{}^2 + \left[\left(V_g\right)_2 + (V_e)_2\right]$$

$$0 + (0 + 10) = 0 + \left[-98.1(0.5 + d) + 250\left(d^2 - 1.6\sqrt{d^2 + 1} + 1.64\right)\right]$$

$$250d^2 - 98.1d - 400\sqrt{d^2 + 1} + 350.95 = 0$$

Solving the above equation by trial and error,

$$d = 1.34 \text{ m}$$ **Ans.**

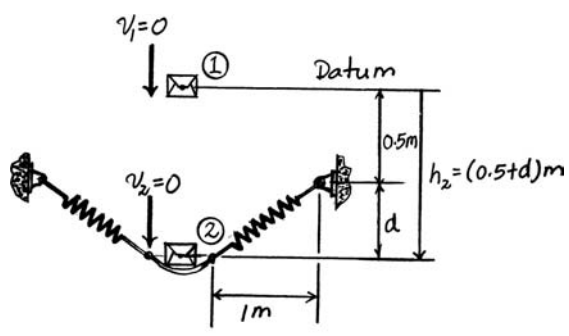

(a)

© 2010 Pearson Education, Inc., Upper Saddle River, NJ. All rights reserved. This material is protected under all copyright laws as they currently exist. No portion of this material may be reproduced, in any form or by any means, without permission in writing from the publisher.

14–95. The man on the bicycle attempts to coast around the ellipsoidal loop without falling off the track. Determine the speed he must maintain at A just before entering the loop in order to perform the stunt. The bicycle and man have a total mass of 85 kg and a center of mass at G. Neglect the mass of the wheels.

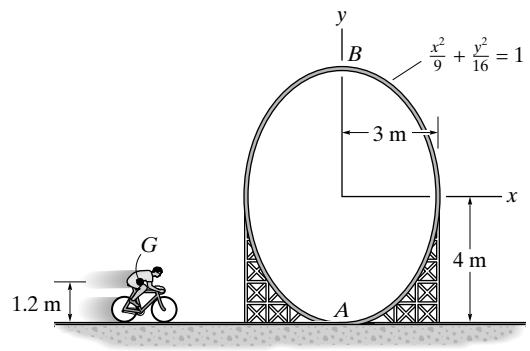

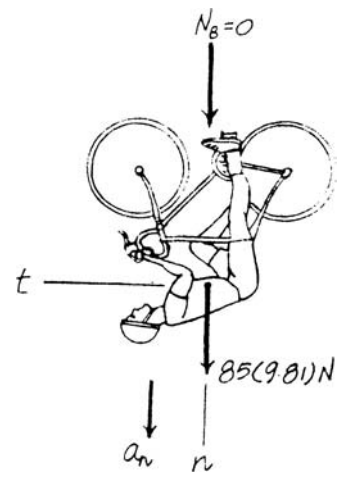

Geometry: Here, $y = \frac{4}{3}\sqrt{9 - x^2}$.

$$\frac{dy}{dx} = -\frac{4}{3}x\left(9 - x^2\right)^{-1/2}\Big|_{x=0} = 0$$

$$\frac{d^2y}{dx^2} = -\frac{4}{3}\left[x^2\left(9 - x^2\right)^{-3/2} + (9 - x)^{-1/2}\right]\Bigg|_{x=0} = -0.4444$$

The slope angle θ at point B is given by

$$\tan\theta = \frac{dy}{dx}\bigg|_{x=0} = 0 \qquad \theta = 0°$$

and the radius of curvature at point B is

$$\rho = \frac{\left[1 + (dy/dx)^2\right]^{3/2}}{|d^2y/dx^2|} = \frac{\left[1 + 0^2\right]^{3/2}}{|-0.4444|}\Bigg| = 2.25 \text{ m}$$

Since the center of mass for the cyclist is 1.2 m off the track, the radius of curvature for the cyclist is

$$\rho' = \rho - 1.2 = 1.05 \text{ m}$$

Equations of Motion: In order for the cyclist to just pass point B without falling off the track, it is required that $N_B = 0$. Applying Eq. 13–8 with $\theta = 0°$ and $\rho = 1.05$ m, we have

$$\Sigma F_n = ma_n; \qquad 85(9.81) = 85\left(\frac{v_B^2}{1.05}\right) \qquad v_B^2 = 10.30 \text{ m}^2/\text{s}^2$$

Potential Energy: Datum is set at the center of mass of the cyclist before he enters the track. When the cyclist is at point B, his position is $(8 - 1.2 - 1.2) = 5.6$ m *above* the datum. Thus, his gravitational potential energy at this point is $85(9.81)(5.6) = 4669.56$ J.

Conservation of Energy:

$$T_A + V_A = T_B + V_B$$

$$\frac{1}{2}(85)v_A^2 + 0 = \frac{1}{2}(85)(10.30) + 4669.56$$

$$v_A = 11.0 \text{ m/s} \qquad \textbf{Ans.}$$

© 2010 Pearson Education, Inc., Upper Saddle River, NJ. All rights reserved. This material is protected under all copyright laws as they currently exist. No portion of this material may be reproduced, in any form or by any means, without permission in writing from the publisher.

***14–96.** The 65-kg skier starts from rest at A. Determine his speed at B and the distance s where he lands at C. Neglect friction.

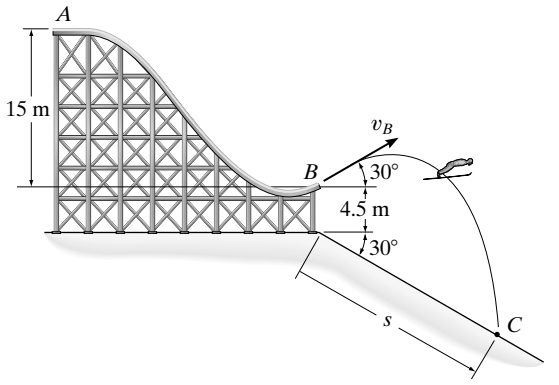

Potential Energy: With reference to the datum set in Fig. a, the gravitational potential energy of the skier at positions A and B are $(V_g)_A = mgh_A = 65(9.81)(0) = 0$ and $(V_g)_B = mgh_B = 65(9.81)(-15) = -9564.75$ J.

Conservation of Energy:

$$T_A + V_A = T_B + V_B$$

$$\frac{1}{2}mv_A{}^2 + (V_g)_A = \frac{1}{2}mv_B{}^2 + (V_g)_B$$

$$0 + 0 = \frac{1}{2}(65)v_B{}^2 + (-9564.75)$$

$$v_B = 17.16 \text{ m/s} = 17.2 \text{ m/s} \qquad \textbf{Ans.}$$

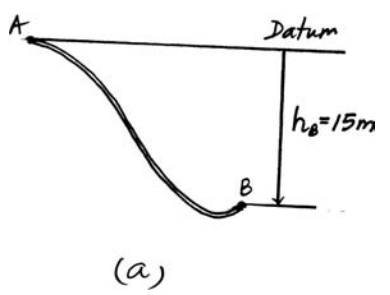

Kinematics: By considering the x-motion of the skier, Fig. b,

$$\left(\overset{+}{\rightarrow}\right) \qquad s_x = (s_B)_x + (v_B)_x t$$

$$s\cos 30° = 0 + 17.16\cos 30°(t)$$

$$s = 17.16t \qquad \textbf{(1)}$$

By considering the y-motion of the skier, Fig. a,

$$\left(+\uparrow\right) \qquad s_y = (s_B)_y + (v_B)_y t + \frac{1}{2}a_y t^2$$

$$-\left(4.5 + s\sin 30°\right) = 0 + 17.16\sin 30°\, t + \frac{1}{2}(-9.81)t^2$$

$$0 = 4.5 + 0.5s + 8.5776t - 4.905t^2 \qquad \textbf{(2)}$$

Solving Eqs. (1) and (2) yields

$$s = 64.2 \text{ m} \qquad \textbf{Ans.}$$

$$t = 3.743 \text{ s}$$

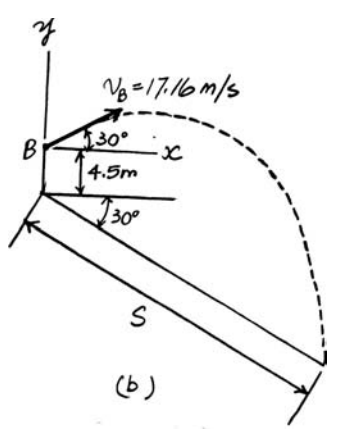

© 2010 Pearson Education, Inc., Upper Saddle River, NJ. All rights reserved. This material is protected under all copyright laws as they currently exist. No portion of this material may be reproduced, in any form or by any means, without permission in writing from the publisher.

•14–97. The 75-kg man bungee jumps off the bridge at A with an initial downward speed of 1.5 m/s. Determine the required unstretched length of the elastic cord to which he is attached in order that he stops momentarily just above the surface of the water. The stiffness of the elastic cord is $k = 3$ kN/m. Neglect the size of the man.

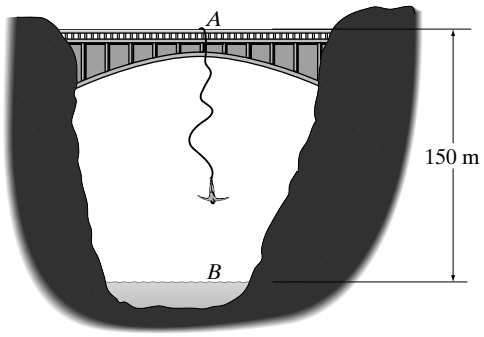

Potential Energy: With reference to the datum set at the surface of the water, the gravitational potential energy of the man at positions A and B are $(V_g)_A = mgh_A = 75(9.81)(150) = 110362.5$ J and $(V_g)_B = mgh_B = 75(9.81)(0) = 0$. When the man is at position A, the elastic cord is unstretched ($s_A = 0$), whereas the elastic cord stretches $s_B = (150 - l_0)$ m, where l_0 is the unstretched length of the cord. Thus, the elastic potential energy of the elastic cord when the man is at these two positions are $(V_e)_A = \frac{1}{2}ks_A{}^2 = 0$ and $(V_e)_B = \frac{1}{2}ks_B{}^2 = \frac{1}{2}(3000)(150 - l_0)^2 = 1500(150 - l_0)^2$.

Conservation of Energy:

$$T_A + V_A = T_B + V_B$$

$$\frac{1}{2}mv_A{}^2 + \left[\left(V_g\right)_A + \left(V_e\right)_A\right] = \frac{1}{2}mv_B{}^2 + \left[\left(V_g\right)_B + \left(V_e\right)_B\right]$$

$$\frac{1}{2}(75)(1.5^2) + \left(110362.5 + 0\right) = 0 + \left[0 + 1500(150 - l_0)^2\right]$$

Ans.

$$l_0 = 141 \text{ m}$$

© 2010 Pearson Education, Inc., Upper Saddle River, NJ. All rights reserved. This material is protected under all copyright laws as they currently exist. No portion of this material may be reproduced, in any form or by any means, without permission in writing from the publisher.

14–98. The 10-kg block A is released from rest and slides down the smooth plane. Determine the compression x of the spring when the block momentarily stops.

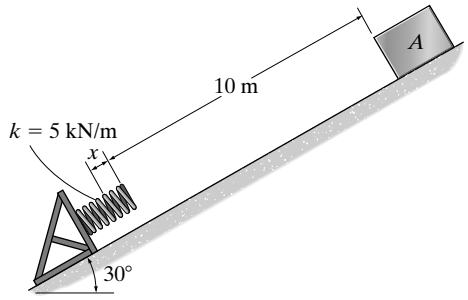

Potential Energy: With reference to the datum set in Fig. a, the gravitational potential energy of the block at positions (1) and (2) are $(V_g)_1 = mgh_1 = 10(9.81)(0) = 0$ and $(V_g)_2 = mgh_2 = 10(9.81)\left[-(10 + x)\sin 30°\right] = -49.05(10 + x)$, respectively. The spring is unstretched initially, thus the initial elastic potential energy of the spring is $(V_e)_1 = 0$. The final elastic energy of the spring is $(V_e)_2 = \frac{1}{2}ks_2{}^2 = \frac{1}{2}(5)(10^3)x^2$ since it is being compressed $s_2 = x$.

Conservation of Energy:

$$T_1 + V_1 = T_2 + V_2$$

$$\frac{1}{2}mv_1{}^2 + \left[\left(V_g\right)_1 + \left(V_e\right)_1\right] = \frac{1}{2}mv_2{}^2 + \left[\left(V_g\right)_2 + \left(V_e\right)_2\right]$$

$$0 + (0 + 0) = 0 + \left[-49.05(10 + x)\right] + \frac{1}{2}(5)(10^3)x^2$$

$$2500x^2 - 49.05x - 490.5 = 0$$

Solving for the positive root of the above equation,

$$x = 0.4529 \text{ m} = 453 \text{ mm} \qquad \textbf{Ans.}$$

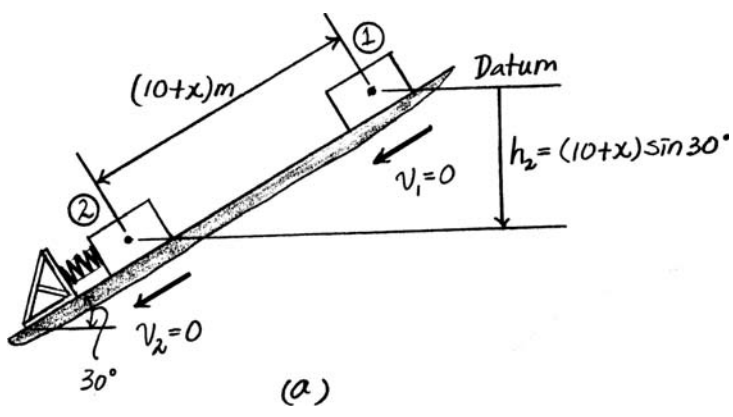

© 2010 Pearson Education, Inc., Upper Saddle River, NJ. All rights reserved. This material is protected under all copyright laws as they currently exist. No portion of this material may be reproduced, in any form or by any means, without permission in writing from the publisher.

14–99. The 20-lb smooth collar is attached to the spring that has an unstretched length of 4 ft. If it is released from rest at position A, determine its speed when it reaches point B.

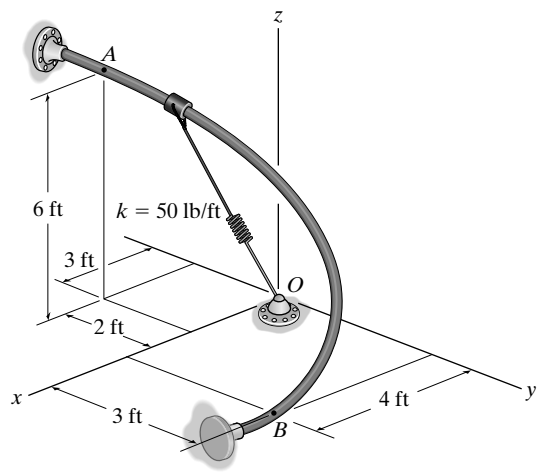

Potential Energy: With reference to the datum set at the x–y plane, the gravitational potential energy of the collar at positions A and B are $(V_g)_A = Wh_A = 20(6) = 120\ \text{ft}\cdot\text{lb}$ and $(V_g)_B = Wh_B = 20(0) = 0$. The stretch of the spring when the collar is at positions A and B are $s_A = OA - l_0 = \sqrt{(3-0)^2 + (-2-0)^2 + (6-0)^2} - 4 = 3\ \text{ft}$ and $s_B = OB - l_0 = \sqrt{(4-0)^2 + (3-0)^2} - 4 = 1\ \text{ft}$. Thus, the elastic potential energy of the spring when the collar is at these two positions are $(V_e)_A = \frac{1}{2}ks_A{}^2 = \frac{1}{2}(50)(3^2) = 225\ \text{ft}\cdot\text{lb}$ and $(V_e)_B = \frac{1}{2}ks\,B^2 = \frac{1}{2}(50)(1^2) = 25\ \text{ft}\cdot\text{lb}$.

Conservation of Energy:

$$T_A + V_A = T_B + V_B$$

$$\frac{1}{2}mv_A{}^2 + \left[(V_g)_A + (V_e)_A\right] = \frac{1}{2}mv_B{}^2 + \left[(V_g)_B + (V_e)_B\right]$$

$$0 + (120 + 225) = \frac{1}{2}\left(\frac{20}{32.2}\right)v_B{}^2 + (0 + 25)$$

$$v_B = 32.1\ \text{ft/s}$$ **Ans.**

© 2010 Pearson Education, Inc., Upper Saddle River, NJ. All rights reserved. This material is protected under all copyright laws as they currently exist. No portion of this material may be reproduced, in any form or by any means, without permission in writing from the publisher.

***14–100.** The 2-kg collar is released from rest at A and travels along the smooth vertical guide. Determine the speed of the collar when it reaches position B. Also, find the normal force exerted on the collar at this position. The spring has an unstretched length of 200 mm.

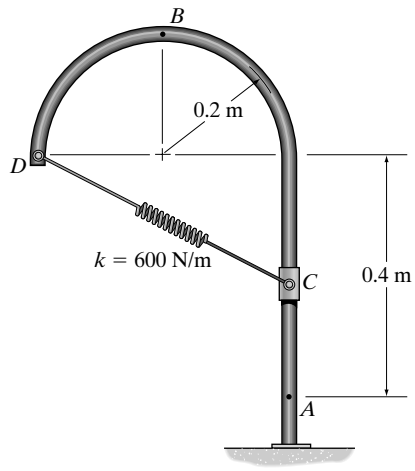

Potential Energy: With reference to the datum set in Fig. a, the gravitational potential energy of the collar at positions A and B are $(V_g)_A = mgh_A = 2(9.81)(0) = 0$ and $(V_g)_B = mgh_B = 2(9.81)(0.6) = 11.772$ J. When the collar is at positions A and B, the spring stretches $s_A = \sqrt{0.4^2 + 0.4^2} - 0.2 = 0.3657$ m and $s_B = \sqrt{0.2^2 + 0.2^2} - 0.2 = 0.08284$ m. Thus, the elastic potential energy of the spring when the collar is at these two positions are

$$(V_e)_A = \frac{1}{2}ks_A{}^2 = \frac{1}{2}(600)(0.3657^2) = 40.118 \text{ J}$$

and

$$(V_e)_B = \frac{1}{2}ks_B{}^2 = \frac{1}{2}(600)(0.08284^2) = 2.0589 \text{ J}.$$

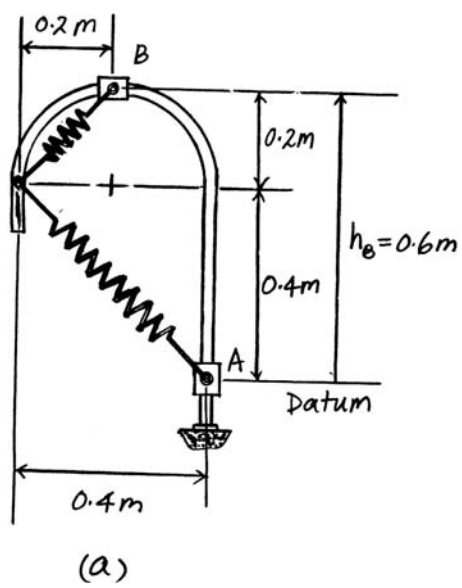

Conservation of Energy:

$$T_A + V_A = T_B + V_B$$

$$\frac{1}{2}mv_A{}^2 + \left[(V_g)_A + (V_e)_A\right] = \frac{1}{2}mv_B{}^2 + \left[(V_g)_B + (V_e)_B\right]$$

$$0 + (0 + 40.118) = \frac{1}{2}(2)v_B{}^2 + (11.772 + 2.0589)$$

$$v_B = 5.127 \text{ m/s} = 5.13 \text{ m/s} \qquad \textbf{Ans.}$$

Equation of Motion: When the collar is at position B, $\theta = \tan^{-1}\left(\frac{0.2}{0.2}\right) = 45°$ and $F_{sp} = ks_B = 600(0.08284) = 49.71$ N. Here,

$$a_n = \frac{v^2}{\rho} = \frac{v_B{}^2}{0.2} = \frac{(5.127)^2}{0.2} = 131.43 \text{ m/s}^2.$$

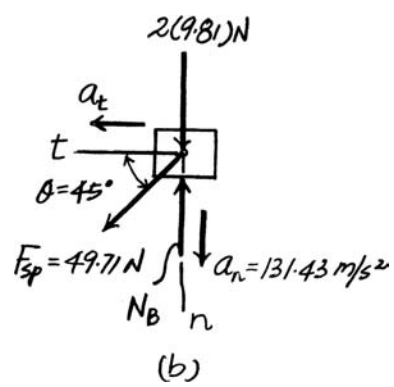

By referring to the free-body diagram of the collar shown in Fig. b,

$$\Sigma F_n = ma_n; \qquad 2(9.81) + 49.71 \sin 45° - N_B = 2(131.43)$$

$$N_B = -208.09 \text{ N} = 208 \text{ N}\downarrow \qquad \textbf{Ans.}$$

Note: The negative sign indicates that $\mathbf{N}_B$ acts in the opposite sense to that shown on the free-body diagram.

© 2010 Pearson Education, Inc., Upper Saddle River, NJ. All rights reserved. This material is protected under all copyright laws as they currently exist. No portion of this material may be reproduced, in any form or by any means, without permission in writing from the publisher.

•14–101. A quarter-circular tube AB of mean radius r contains a smooth chain that has a mass per unit length of m_0. If the chain is released from rest from the position shown, determine its speed when it emerges completely from the tube.

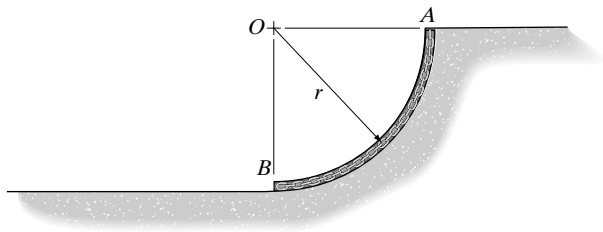

Potential Energy: The location of the center of gravity G of the chain at positions (1) and (2) are shown in Fig. a. The mass of the chain is $m = m_0\left(\frac{\pi}{2}r\right) = \frac{\pi}{2}m_0 r$. Thus, the center of mass is at $h_1 = r - \frac{2r}{\pi} = \left(\frac{\pi - 2}{\pi}\right)r$. With reference to the datum set in Fig. a the gravitational potential energy of the chain at positions (1) and (2) are

$$(V_g)_1 = mgh_1 = \left(\frac{\pi}{2}m_0 rg\right)\left(\frac{\pi - 2}{\pi}\right)r = \left(\frac{\pi - 2}{2}\right)m_0 r^2 g$$

and

$$(V_g)_2 = mgh_2 = 0$$

Conservation of Energy:

$$T_1 + V_1 = T_2 + V_2$$

$$\frac{1}{2}mv_1^2 + (V_g)_1 = \frac{1}{2}mv_2^2 + (V_g)_2$$

$$0 + \left(\frac{\pi - 2}{2}\right)m_0 r^2 g = \frac{1}{2}\left(\frac{\pi}{2}m_0 r\right)v_2^2 + 0$$

$$v_2 = \sqrt{\frac{2}{\pi}(\pi - 2)gr}$$ **Ans.**

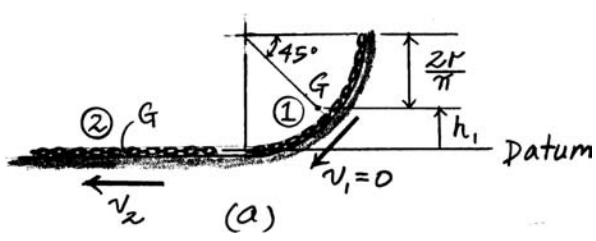

© 2010 Pearson Education, Inc., Upper Saddle River, NJ. All rights reserved. This material is protected under all copyright laws as they currently exist. No portion of this material may be reproduced, in any form or by any means, without permission in writing from the publisher.

14–102. The ball of mass m is given a speed of $v_A = \sqrt{3gr}$ at position A. When it reaches B, the cord hits the small peg P, after which the ball describes a smaller circular path. Determine the position x of P so that the ball will just be able to reach point C.

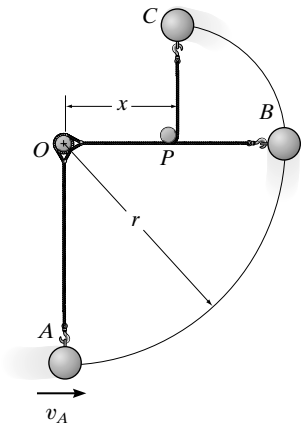

Equation of Motion: If the ball is just about to complete the small circular path, the cord will become slack at position C, i.e., $T = 0$. Here, $a_n = \frac{v^2}{\rho} = \frac{v_C{}^2}{r - x}$. By referring to the free-body diagram of the ball shown in Fig. a,

$$\Sigma F_n = ma_n; \qquad mg = m\left(\frac{v_C{}^2}{r - x}\right) \qquad v_C{}^2 = g(r - x) \qquad \textbf{(1)}$$

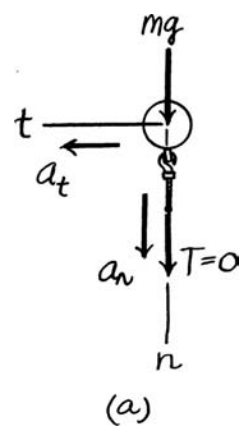

Potential Energy: With reference to the datum set in Fig. b, the gravitational potential energy of the ball at positions A and C are $(V_g)_A = mgh_A = mg(0) = 0$ and $(V_g)_C = mgh_C = mg(2r - x)$.

Conservation of Energy:

$$T_A + V_A = T_C + V_C$$

$$\frac{1}{2}mv_A{}^2 + (V_g)_A = \frac{1}{2}mv_C{}^2 + (V_g)_C$$

$$\frac{1}{2}m(3gr) + 0 = \frac{1}{2}mv_C{}^2 + mg(2r - x)$$

$$v_C{}^2 = g(2x - r) \qquad \textbf{(2)}$$

Solving Eqs. (1) and (2) yields

$$x = \frac{2}{3}r \qquad \textbf{Ans.}$$

$$v_C = \sqrt{\frac{1}{2}gr}$$

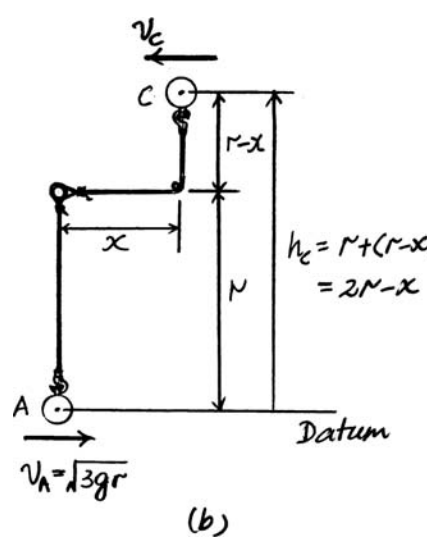

© 2010 Pearson Education, Inc., Upper Saddle River, NJ. All rights reserved. This material is protected under all copyright laws as they currently exist. No portion of this material may be reproduced, in any form or by any means, without permission in writing from the publisher.

14–103. The ball of mass m is given a speed of $v_A = \sqrt{5gr}$ at position A. When it reaches B, the cord hits the peg P, after which the ball describes a smaller circular path. If $x = \frac{2}{3}r$, determine the speed of the ball and the tension in the cord when it is at the highest point C.

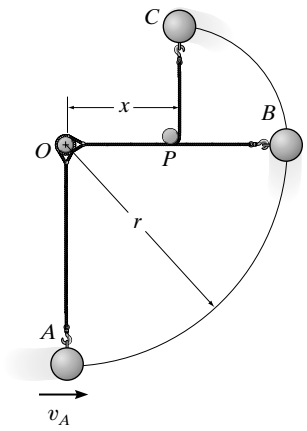

Potential Energy: With reference to the datum set in Fig. a, the gravitational potential energy of the ball at positions A and C are $(V_g)_A = mgh_A = mg(0) = 0$ and $(V_g)_C = mgh_C = mg\left(\frac{4}{3}r\right) = \frac{4}{3}mgr$.

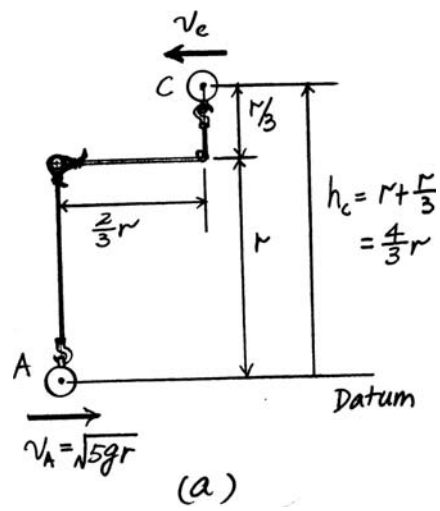

Conservation of Energy:

$$T_A + V_A = T_C + V_C$$

$$\frac{1}{2}mv_A{}^2 + (V_g)_A = \frac{1}{2}mv_C{}^2 + (V_g)_C$$

$$\frac{1}{2}m(5gr) + 0 = \frac{1}{2}mv_C{}^2 + \frac{4}{3}mgr$$

$$v_C = \sqrt{\frac{7}{3}gr} \qquad \textbf{Ans.}$$

Equations of Motion: Here, $a_n = \frac{v_C{}^2}{\rho} = \frac{\frac{7}{3}gr}{r/3}$. By referring to the free-body diagram of the ball shown in Fig. b,

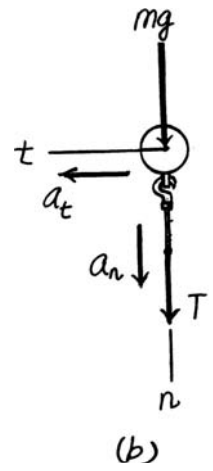

$$\Sigma F_n = ma_n; \qquad T + mg = m(7g)$$

$$T = 6mg \qquad \textbf{Ans.}$$

© 2010 Pearson Education, Inc., Upper Saddle River, NJ. All rights reserved. This material is protected under all copyright laws as they currently exist. No portion of this material may be reproduced, in any form or by any means, without permission in writing from the publisher.

***14–104.** If the mass of the earth is M_e, show that the gravitational potential energy of a body of mass m located a distance r from the center of the earth is $V_g = -GM_e m/r$. Recall that the gravitational force acting between the earth and the body is $F = G(M_e m/r^2)$, Eq. 13–1. For the calculation, locate the datum an "infinite" distance from the earth. Also, prove that **F** is a conservative force.

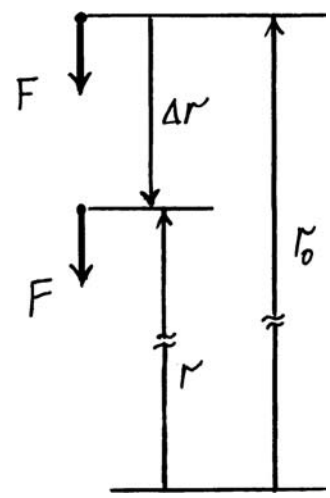

The work is computed by moving F from position r_1 to *a* farther position r_2.

$$V_g = -U = -\int F\,dr$$

$$= -G\,M_e\,m\int_{r1}^{r2}\frac{dr}{r^2}$$

$$= -G\,M_e\,m\left(\frac{1}{r_2}-\frac{1}{r_1}\right)$$

As $r_1 \rightarrow \infty$, let $r_2 = r_1$, $F_2 = F_1$, then

$$V_g \rightarrow \frac{-G\,M_e\,m}{r}$$

To be conservative, require

$$F = -\nabla V_g = -\frac{\partial}{\partial r}\left(-\frac{G\,M_e\,m}{r}\right)$$

$$= \frac{-G\,M_e\,m}{r^2}$$

Q.E.D.

•14–105. A 60-kg satellite travels in free flight along an elliptical orbit such that at A, where $r_A = 20$ Mm, it has a speed $v_A = 40$ Mm/h. What is the speed of the satellite when it reaches point B, where $r_B = 80$ Mm? *Hint:* See Prob. 14–104, where $M_e = 5.976(10^{24})$ kg and $G = 66.73(10^{-12})\ \mathrm{m^3/(kg\cdot s^2)}$.

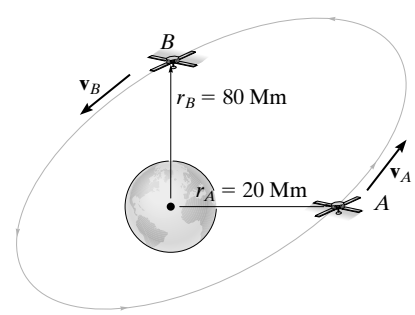

$v_A = 40$ Mm/h $= 11\,111.1$ m/s

Since $V = -\dfrac{GM_e\,m}{r}$

$T_1 + V_1 = T_2 + V_2$

$$\frac{1}{2}(60)(11\,111.1)^2 - \frac{66.73(10)^{-12}(5.976)(10)^{23}(60)}{20(10)^6} = \frac{1}{2}(60)v_B^2 - \frac{66.73(10)^{-12}(5.976)(10)^{24}(60)}{80(10)^6}$$

$v_B = 9672$ m/s $= 34.8$ Mm/h **Ans.**

© 2010 Pearson Education, Inc., Upper Saddle River, NJ. All rights reserved. This material is protected under all copyright laws as they currently exist. No portion of this material may be reproduced, in any form or by any means, without permission in writing from the publisher.

14–106. The double-spring bumper is used to stop the 1500-lb steel billet in the rolling mill. Determine the maximum displacement of the plate A if the billet strikes the plate with a speed of 8 ft/s. Neglect the mass of the springs, rollers and the plates A and B. Take $k_1 = 3000$ lb/ft, $k_2 = 45000$ lb/ft.

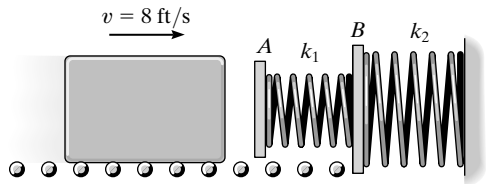

$T_1 + V_1 = T_2 + V_2$

$$\frac{1}{2}\left(\frac{1500}{32.2}\right)(8)^2 + 0 = 0 + \frac{1}{2}(3000)s_L^2 + \frac{1}{2}(4500)s\frac{2}{2} \qquad \textbf{(1)}$$

$$F_s = 3000s_1 = 4500s_2; \qquad \textbf{(2)}$$

$s_1 = 1.5s_2$

Solving Eqs. (1) and (2) yields:

$s_2 = 0.5148$ ft $\qquad s_1 = 0.7722$ ft

$s_A = s_1 + s_2 = 0.7722 + 0.5148 = 1.29$ ft **Ans.**

© 2010 Pearson Education, Inc., Upper Saddle River, NJ. All rights reserved. This material is protected under all copyright laws as they currently exist. No portion of this material may be reproduced, in any form or by any means, without permission in writing from the publisher.

•15–1. A 5-lb block is given an initial velocity of 10 ft/s up a 45° smooth slope. Determine the time for it to travel up the slope before it stops.

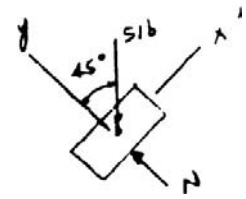

$(\nearrow +)$ $\quad m(v_{x'})_1 + \Sigma \int_{t_1}^{-t_2} F_x\, dt = m(v_{x'})_2$

$$\frac{5}{32.2}(10) + (-5 \sin 45°)t = 0$$

$t = 0.439$ s **Ans.**

15–2. The 12-Mg "jump jet" is capable of taking off vertically from the deck of a ship. If its jets exert a constant vertical force of 150 kN on the plane, determine its velocity and how high it goes in $t = 6$ s, starting from rest. Neglect the loss of fuel during the lift.

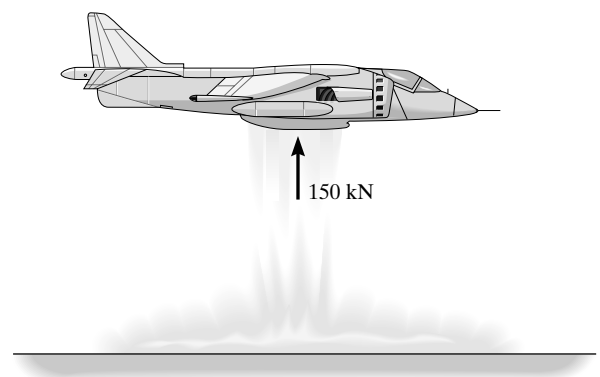

$(+\uparrow)$ $\quad m(v_y)_1 + \Sigma \int F_y\, dt = m(v_y)_2$

$$0 + 150(10^3)(6) - 12(10^3)(9.81)(6) = 12(10^3)v$$

$v = 16.14$ m/s $= 16.1$ m/s **Ans.**

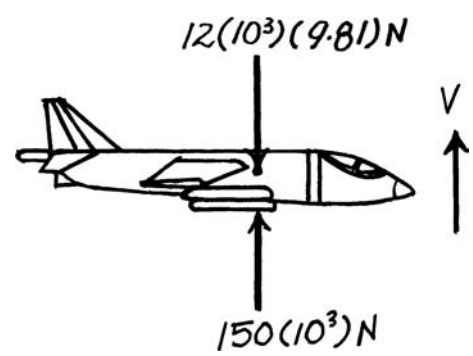

$(+\uparrow)$ $\quad v = v_0 + a_c t$

$$16.14 = 0 + a(6)$$

$$a = 2.690 \text{ m/s}^2$$

$(+\uparrow)$ $\quad s = s_0 + v_0 t + \frac{1}{2} a_c t^2$

$$s = 0 + 0 + \frac{1}{2}(2.690)(6)^2$$

$s = 48.4$ m **Ans.**

© 2010 Pearson Education, Inc., Upper Saddle River, NJ. All rights reserved. This material is protected under all copyright laws as they currently exist. No portion of this material may be reproduced, in any form or by any means, without permission in writing from the publisher.

15–3. The graph shows the vertical reactive force of the shoe-ground interaction as a function of time. The first peak acts on the heel, and the second peak acts on the forefoot. Determine the total impulse acting on the shoe during the interaction.

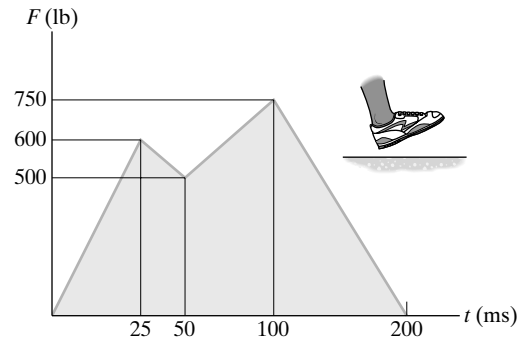

Impulse: The total impluse acting on the shoe can be obtained by evaluating the area under the $F - t$ graph.

$$I = \frac{1}{2}(600)\left[25\left(10^{-3}\right)\right] + \frac{1}{2}(500 + 600)(50 - 25)\left(10^{-3}\right)$$

$$+ \frac{1}{2}(500 + 750)(100 - 50)\left(10^{-3}\right) + \frac{1}{2}(750)\left[(200 - 100)\left(10^{-3}\right)\right]$$

$$= 90.0 \text{ lb} \cdot \text{s}$$ **Ans.**

***15–4.** The 28-Mg bulldozer is originally at rest. Determine its speed when $t = 4$ s if the horizontal traction **F** varies with time as shown in the graph.

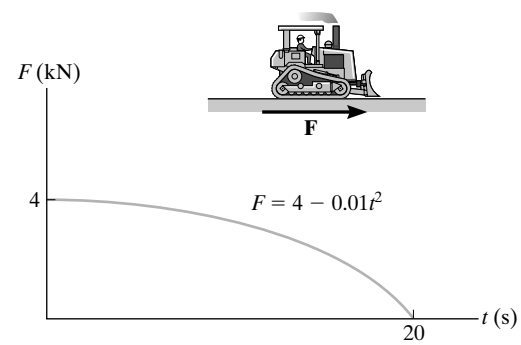

$$\left(\overset{+}{\rightarrow}\right) \quad m(v_x)_1 + \Sigma \int_{t_1}^{t_2} F_x \, dt = m(v_x)_2$$

$$0 + \int_0^4 (4 - 0.01t^2)(10^3)dt = 28(10^3)v$$

$$v = 0.564 \text{ m/s}$$ **Ans.**

© 2010 Pearson Education, Inc., Upper Saddle River, NJ. All rights reserved. This material is protected under all copyright laws as they currently exist. No portion of this material may be reproduced, in any form or by any means, without permission in writing from the publisher.

•15–5. If cylinder A is given an initial downward speed of 2 m/s, determine the speed of each cylinder when $t = 3$ s. Neglect the mass of the pulleys.

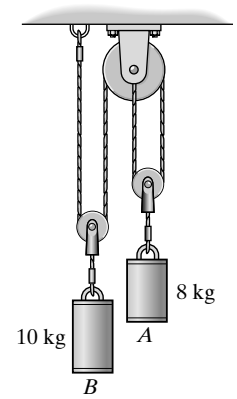

Free-Body Diagram: The free-body diagram of blocks A and B are shown in Figs. b and c, respectively. Here, the final velocity of blocks A and B, $(\mathbf{v}_A)_2$ and $(\mathbf{v}_B)_2$ must be assumed to be directed downward so that they are consistent with the positive sense of s_A and s_B shown in Fig. a.

Kinematics: Expressing the length of the cable in terms of s_A and s_B by referring to Fig. a,

$$2s_A + 2s_B = l$$

$$s_A + s_B = l/2 \qquad \textbf{(1)}$$

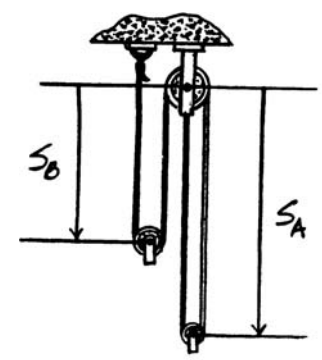

Taking the time derivative of Eq. (1), we obtain

$$(+\downarrow) \qquad v_A + v_B = 0 \qquad \textbf{(2)}$$

Principle of Impulse and Momentum: Initially, the velocity of block A is directed downward. Thus, $(v_A)_1 = 2$ m/s $\downarrow$.

From Eq. (2),

$$(+\downarrow) \qquad 2 + (v_B)_1 = 0 \qquad\qquad (v_B)_1 = -2 \text{ m/s} = 2 \text{ m/s} \uparrow$$

By referring to Fig. b,

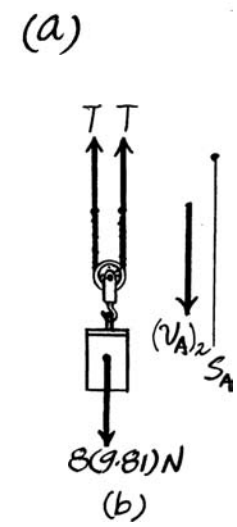

$$(+\uparrow) \qquad m(v_A)_1 + \Sigma \int_{t_1}^{t_2} F_y\, dt = m(v_A)_2$$

$$8(-2) + 2T(3) - 8(9.81)(3) = 8[-(v_A)_2]$$

$$6T = 251.44 - 8(v_A)_2 \qquad \textbf{(3)}$$

By referring Fig. c,

$$(+\uparrow) \qquad m(v_B)_1 + \Sigma \int_{t_1}^{t_2} F_y dt = m(v_B)_2$$

$$10(2) + 2T(3) - 10(9.81)(3) = 10[-(v_B)_2]$$

$$6T = 274.3 - 10(v_B)_2 \qquad \textbf{(4)}$$

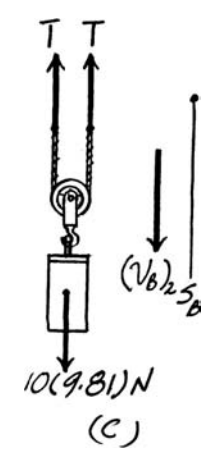

Solving Eqs. (2), (3), and (4),

$$(v_A)_2 = -1.27 \text{ m/s} = 1.27 \text{ m/s} \uparrow \qquad \textbf{Ans.}$$

$$(v_B)_2 = 1.27 \text{ m/s} \downarrow \qquad \textbf{Ans.}$$

$$T = 43.6 \text{ N}$$

© 2010 Pearson Education, Inc., Upper Saddle River, NJ. All rights reserved. This material is protected under all copyright laws as they currently exist. No portion of this material may be reproduced, in any form or by any means, without permission in writing from the publisher.

15–6. A train consists of a 50-Mg engine and three cars, each having a mass of 30 Mg. If it takes 80 s for the train to increase its speed uniformly to 40 km/h, starting from rest, determine the force T developed at the coupling between the engine E and the first car A. The wheels of the engine provide a resultant frictional tractive force **F** which gives the train forward motion, whereas the car wheels roll freely. Also, determine F acting on the engine wheels.

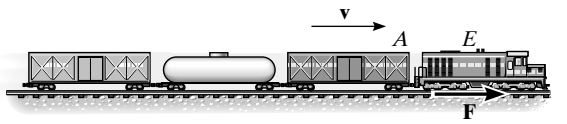

$(v_x)_2 = 40 \text{ km/h} = 11.11 \text{ m/s}$

Entire train:

$$\left(\overset{+}{\rightarrow}\right) \quad m(v_x)_1 + \Sigma \int F_x\, dt = m(v_x)_2$$

$$0 + F(80) = [50 + 3(30)]\left(10^3\right)(11.11)$$

$$F = 19.4 \text{ kN} \qquad \textbf{Ans.}$$

Three cars:

$$\left(\overset{+}{\rightarrow}\right) \quad m(v_x)_1 + \Sigma \int F_x\, dt = m(v_x)_2$$

$$0 + T(80) = 3(30)\left(10^3\right)(11.11) \qquad T = 12.5 \text{ kN} \qquad \textbf{Ans.}$$

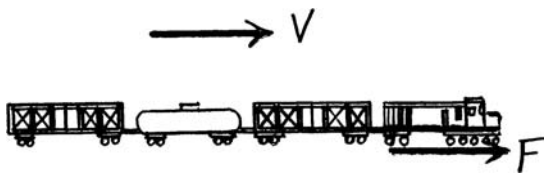

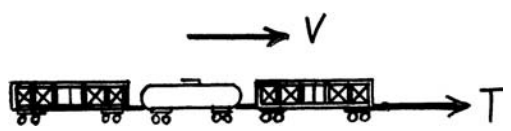

© 2010 Pearson Education, Inc., Upper Saddle River, NJ. All rights reserved. This material is protected under all copyright laws as they currently exist. No portion of this material may be reproduced, in any form or by any means, without permission in writing from the publisher.

15–7. Determine the maximum speed attained by the 1.5-Mg rocket sled if the rockets provide the thrust shown in the graph. Initially, the sled is at rest. Neglect friction and the loss of mass due to fuel consumption.

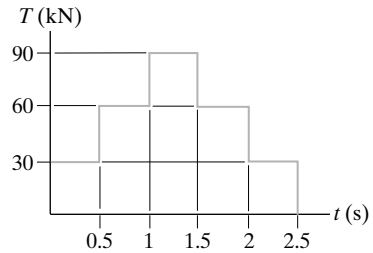

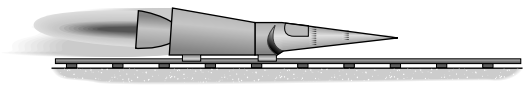

Principle of Impulse and Momentum: The graph of thrust **T** vs. time t due to the successive ignition of the rocket is shown in Fig. *a*. The sled attains its maximum speed at the instant that all the rockets burn out their fuel, that is, at $t = 2.5$ s. The impulse generated by **T** during $0 \le t \le 2.5$ s is equal to the area under the T vs t graphs. Thus,

$$I = \int T dt = 30(10^3)(0.5 - 0) + 60(10^3)(1 - 0.5) + 90(10^3)(1.5 - 1)$$
$$+ 60(10^3)(2 - 1.5) + 30(10^3)(25 - 2) = 135\,000 \text{ N} \cdot \text{s}$$

By referring to the free-body diagram of the sled shown in Fig. *a*,

$$\left(\overset{+}{\rightarrow}\right) \qquad m(v_1)_x + \Sigma \int F_x dt = m(v_2)_x$$

$$1500(0) + 135000 = 1500 v_{\max}$$

$$v_{\max} = 90 \text{ m/s} \qquad \textbf{Ans.}$$

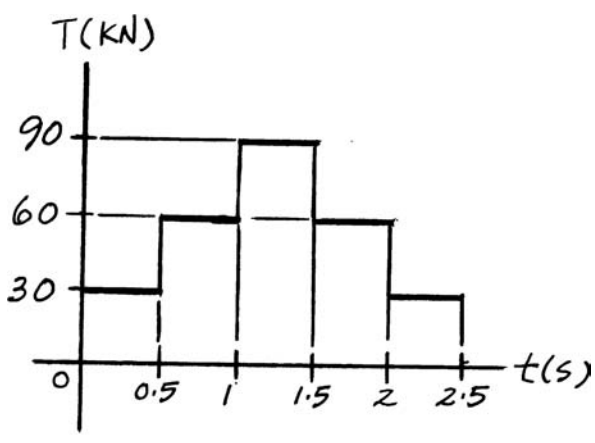

(a)

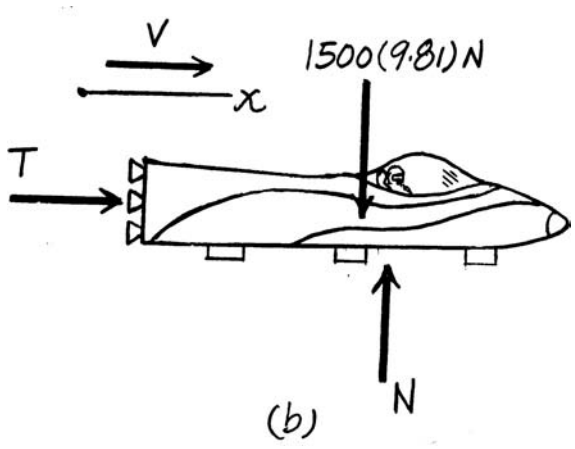

(b)

© 2010 Pearson Education, Inc., Upper Saddle River, NJ. All rights reserved. This material is protected under all copyright laws as they currently exist. No portion of this material may be reproduced, in any form or by any means, without permission in writing from the publisher.

***15–8.** The 1.5-Mg four-wheel-drive jeep is used to push two identical crates, each having a mass of 500 kg. If the coefficient of static friction between the tires and the ground is $\mu_s = 0.6$, determine the maximum possible speed the jeep can achieve in 5 s without causing the tires to slip. The coefficient of kinetic friction between the crates and the ground is $\mu_k = 0.3$.

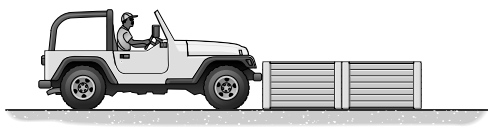

Free-Body Diagram: The free-body diagram of the jeep and crates are shown in Figs. *a* and *b*, respectively. Here, the maximum driving force for the jeep is equal to the maximum static friction between the tires and the ground, i.e., $F_D = \mu_s N_J = 0.6 N_J$. The frictional force acting on the crate is $(F_f)_C = \mu_k N_C = 0.3 N_C$.

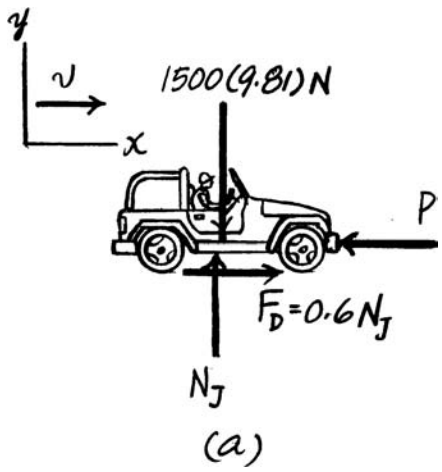

(a)

Principle of Impulse and Momentum: By referring to Fig. *a*,

$(+\uparrow)$ $$m(v_1)_y + \Sigma \int_{t_1}^{t_2} F_y dt = m(v_2)_y$$

$$1500(0) + N_J(5) - 1500(9.81)(5) = 1500(0)$$

$$N_J = 14715 \text{ N}$$

$(\overset{+}{\rightarrow})$ $$m(v_1)_x + \Sigma \int_{t_1}^{t_2} F_x dt = m(v_2)_x$$

$$1500(0) + 0.6(14715)(5) - P(5) = 1500v$$

$$v = 29.43 - 3.333(10^{-3})P \qquad \textbf{(1)}$$

By considering Fig. *b*,

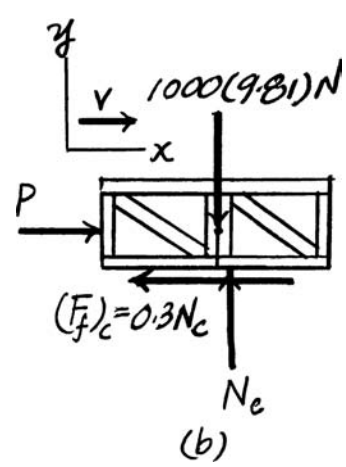

(b)

$(+\uparrow)$ $$m(v_1)_y + \Sigma \int_{t_1}^{t_2} F_y dt = m(v_2)_y$$

$$1000(0) + N_C(5) - 1000(9.81)(5) = 1000(0)$$

$$N_C = 9810 \text{ N}$$

$(\overset{+}{\rightarrow})$ $$m(v_1)_x + \Sigma \int_{t_1}^{t_2} F_x dt = m(v_2)_x$$

$$1000(0) + P(5) - 0.3(9810)(5) = 1000v$$

$$v = 0.005P - 14.715 \qquad \textbf{(2)}$$

Solving Eqs. (1) and (2) yields

$$v = 11.772 \text{ m/s} = 11.8 \text{ m/s} \qquad \textbf{Ans.}$$

$$P = 5297.4 \text{ N}$$

© 2010 Pearson Education, Inc., Upper Saddle River, NJ. All rights reserved. This material is protected under all copyright laws as they currently exist. No portion of this material may be reproduced, in any form or by any means, without permission in writing from the publisher.

•15–9. The tanker has a mass of 130 Gg. If it is originally at rest, determine its speed when $t = 10$ s. The horizontal thrust provided by its propeller varies with time as shown in the graph. Neglect the effect of water resistance.

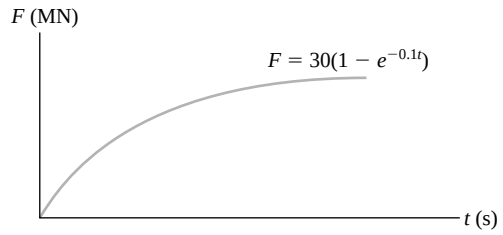

Principle of Linear Impulse and Momentum: Applying Eq. 15–4, we have

$$m(v_x)_1 + \Sigma \int_{t_1}^{t_2} F_x\, dt = m(v_x)_2$$

$$(\overset{+}{\rightarrow}) \qquad 0 + \int_0^{10s} 30\left(10^6\right)\left(1 - e^{-0.1t}\right)dt = 0.130\left(10^9\right) v$$

$$v = 0.849 \text{ m/s}$$ **Ans.**

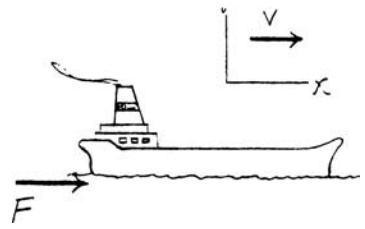

15–10. The 20-lb cabinet is subjected to the force $F = (3 + 2t)$ lb, where t is in seconds. If the cabinet is initially moving down the plane with a speed of 6 ft/s, determine how long for the force to bring the cabinet to rest. **F** always acts parallel to the plane.

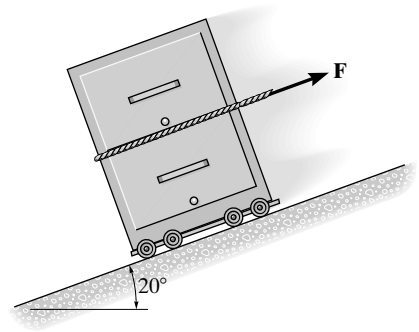

$$(+\swarrow) \qquad m(v_x)_1 + \Sigma \int F_x\, dt = m(v_x)_2$$

$$\left(\frac{20}{32.2}\right)(6) + 20(\sin 20°)t - \int_0^t (3 + 2t)\, dt = 0$$

$$3.727 + 3.840t - t^2 = 0$$

Solving for the positive root,

$$t = 4.64 \text{ s}$$ **Ans.**

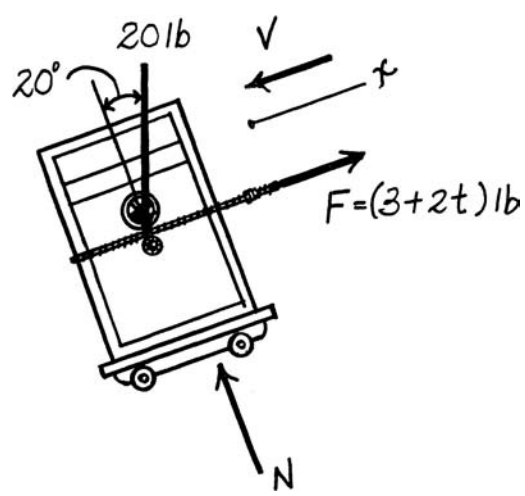

© 2010 Pearson Education, Inc., Upper Saddle River, NJ. All rights reserved. This material is protected under all copyright laws as they currently exist. No portion of this material may be reproduced, in any form or by any means, without permission in writing from the publisher.

15–11. The small 20-lb block is placed on the inclined plane and subjected to 6-lb and 15-lb forces that act parallel with edges AB and AC, respectively. If the block is initially at rest, determine its speed when $t = 3$ s. The coefficient of kinetic friction between the block and the plane is $\mu_k = 0.2$.

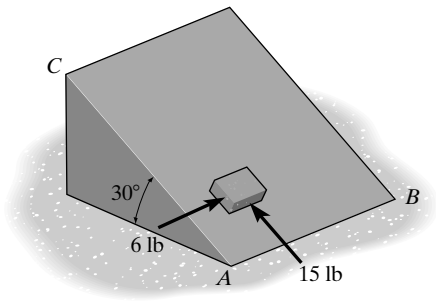

Free-Body Diagram: Here, the x–y plane is set parallel with the inclined plane. Thus, the z axis is perpendicular to the inclined plane. The frictional force will act along but in the opposite sense to that of the motion, which makes an angle θ with the x axis. Its magnitude is $F_f = \mu_k N = 0.2N$.

Principle of Impulse and Momentum: By referring to Fig. a,

$$m(v_1)_z + \Sigma \int_{t_1}^{t_2} F_z\, dt = m(v_2)_z$$

$$\frac{20}{32.2}(0) + N(3) - 20\cos 30°(3) = \frac{20}{32.2}(0)$$

$$N = 17.32 \text{ lb}$$

and

$$m(v_1)_x + \Sigma \int_{t_1}^{t_2} F_x\, dt = m(v_2)_x$$

$$\frac{20}{32.2}(0) + 6(3) - \left[0.2(17.32)\cos\theta\right](3) = \; = \frac{20}{32.2}(v\cos\theta)$$

$$\cos\theta(v + 16.73) = 28.98 \qquad \textbf{(1)}$$

and

$$m(v_1)_y + \Sigma \int_{t_1}^{t_2} F_y\, dt = m(v_2)_y$$

$$\frac{20}{32.2}(0) + 15(3) - (20\sin 30°)(3) - \left[0.2(17.32)\sin\theta\right](3) = \frac{20}{32.2}(v\sin\theta)$$

$$\sin\theta(v + 16.73) = 24.15 \qquad \textbf{(2)}$$

Solving Eqs. (1) and (2),

$$\theta = 39.80°$$

$$v = 20.99 \text{ ft/s} = 21.0 \text{ ft/s} \qquad \textbf{Ans.}$$

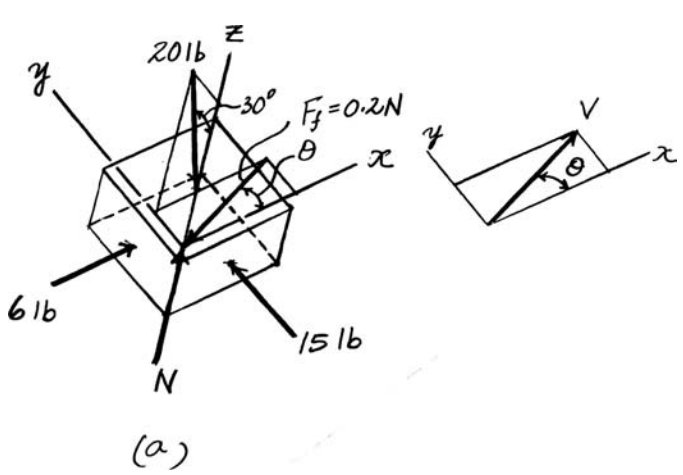

© 2010 Pearson Education, Inc., Upper Saddle River, NJ. All rights reserved. This material is protected under all copyright laws as they currently exist. No portion of this material may be reproduced, in any form or by any means, without permission in writing from the publisher.

***15–12.** Assuming that the force acting on a 2-g bullet, as it passes horizontally through the barrel of a rifle, varies with time in the manner shown, determine the maximum net force F_0 applied to the bullet when it is fired. The muzzle velocity is 500 m/s when $t = 0.75$ ms. Neglect friction between the bullet and the rifle barrel.

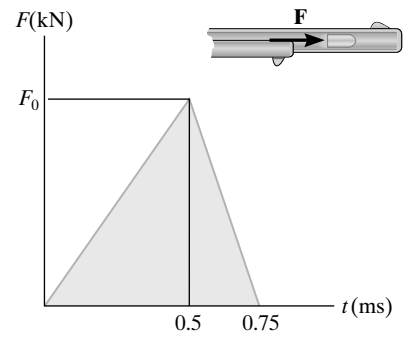

Principle of Linear Impulse and Momentum: The total impluse acting on the bullet can be obtained by evaluating the area under the F–t graph. Thus,

$$I = \Sigma \int_{t_1}^{t_2} F_x\, dt = \frac{1}{2}(F_0)\left[0.5\left(10^{-3}\right)\right] + \frac{1}{2}(F_0)\left[(0.75 - 0.5)\left(10^{-3}\right)\right]$$

$= 0.375\left(10^{-3}\right) F_0$. Applying Eq. 15–4, we have

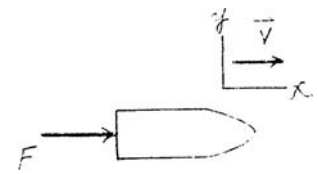

$$m(v_x)_1 + \Sigma \int_{t_1}^{t_2} F_x\, dt = m(v_x)_2$$

$$(\overset{+}{\rightarrow}) \qquad 0 + 0.375\left(10^{-3}\right) F_0 = 2\left(10^{-3}\right)(500)$$

$$F_0 = 2666.67 \text{ N} = 2.67 \text{ kN} \qquad \textbf{Ans.}$$

•15–13. The fuel-element assembly of a nuclear reactor has a weight of 600 lb. Suspended in a vertical position from H and initially at rest, it is given an upward speed of 5 ft/s in 0.3 s. Determine the average tension in cables AB and AC during this time interval.

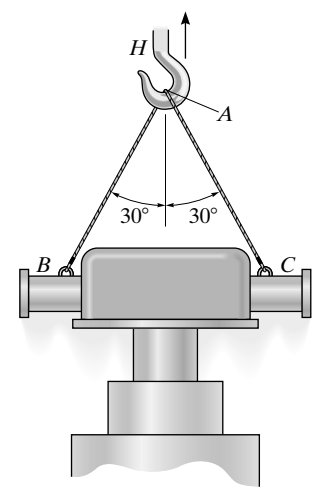

$$(+\uparrow) \qquad m(v_y)_1 + \Sigma \int F_y\, dt = m(v_y)_2$$

$$0 + 2(T \cos 30°)(0.3) - 600(0.3) = \left(\frac{600}{32.2}\right)(5)$$

$$T = 526 \text{ lb} \qquad \textbf{Ans.}$$

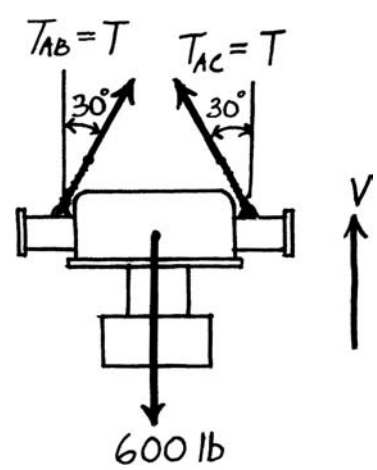

© 2010 Pearson Education, Inc., Upper Saddle River, NJ. All rights reserved. This material is protected under all copyright laws as they currently exist. No portion of this material may be reproduced, in any form or by any means, without permission in writing from the publisher.

15–14. The 10-kg smooth block moves to the right with a velocity of $v_0 = 3$ m/s when force **F** is applied. If the force varies as shown in the graph, determine the velocity of the block when $t = 4.5$ s.

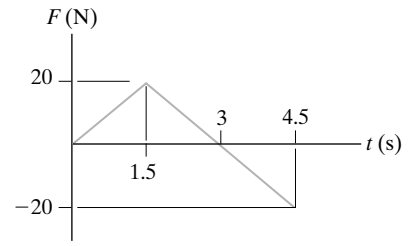

Principle of Impulse and Momentum: The impulse generated by force **F** during $0 \le t \le 4.5$ is equal to the area under the **F** vs. t graph, i.e., $I = \int F dt = \frac{1}{2}(20)(3-0) + \left[-\frac{1}{2}(20)(4.5-3)\right] = 15\ \text{N}\cdot\text{s}$. Referring to the free-body diagram of the block shown in Fig. *a*,

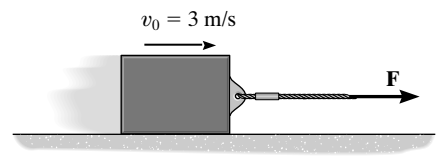

$$\left(\overset{+}{\rightarrow}\right) \qquad m(v_1)_x + \Sigma \int_{t_1}^{t_2} F_x\, dt = m(v_2)_x$$

$$10(3) + 15 = 10v$$

$$v = 4.50\ \text{m/s} \qquad \textbf{Ans.}$$

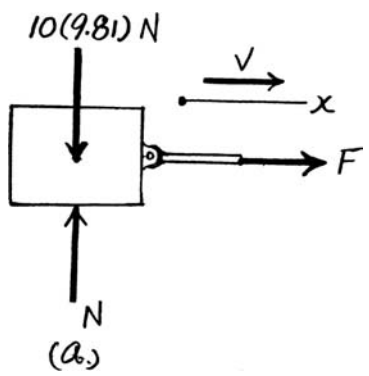

15–15. The 100-kg crate is hoisted by the motor M. If the velocity of the crate increases uniformly from 1.5 m/s to 4.5 m/s in 5 s, determine the tension developed in the cable during the motion.

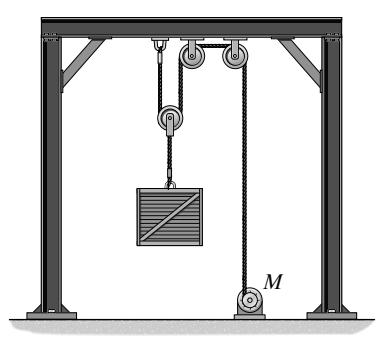

Principle of Impulse and Momentum: By referring to the free-body diagram of the crate shown in Fig. *a*,

$$\left(+\uparrow\right) \qquad m(v_1)_y + \Sigma \int_{t_1}^{t_2} F_y dt = m(v_2)_y$$

$$100(1.5) + 2T(5) - 100(9.81)(5) = 100(4.5)$$

$$T = 520.5\ \text{N} \qquad \textbf{Ans.}$$

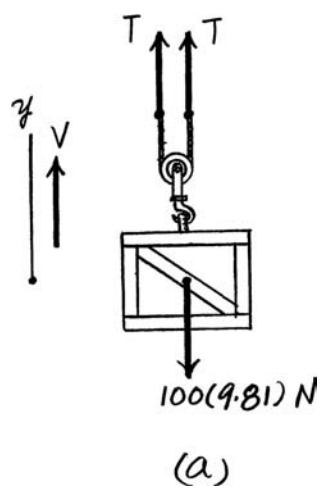

© 2010 Pearson Education, Inc., Upper Saddle River, NJ. All rights reserved. This material is protected under all copyright laws as they currently exist. No portion of this material may be reproduced, in any form or by any means, without permission in writing from the publisher.

***15–16.** The 100-kg crate is hoisted by the motor M. The motor exerts a force on the cable of $T = (200t^{1/2} + 150)$ N, where t is in seconds. If the crate starts from rest at the ground, determine the speed of the crate when $t = 5$ s.

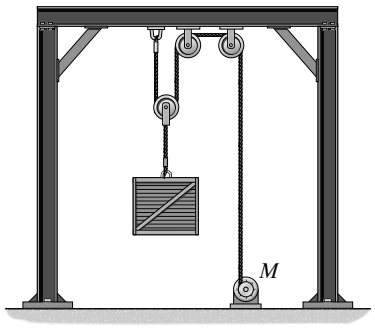

Free-Body Diagram: Here, force 2**T** must overcome the weight of the crate before it moves. By considering the equilibrium of the free-body diagram of the crate shown in Fig. a,

$$+\uparrow \Sigma F_y = 0; \qquad 2\left(200t^{1/2} + 150\right) - 100(9.81) = 0 \qquad t = 2.8985 \text{ s}$$

Principle of Impulse and Momentum: Here, only the impulse generated by force 2**T** after $t = 2.8186$ s contributes to the motion. Referring to Fig. a,

$$\left(+\uparrow\right) \qquad m\left(v_1\right)_y + \Sigma \int_{t_1}^{t_2} F_y\, dt = m\left(v_2\right)_y$$

$$100(0) + 2\int_{2.898\text{ s}}^{5\text{s}} \left(200t^{1/2} + 150\right) dt - 100(9.81)(5 - 2.8985) = 100v$$

$$v = 2.34 \text{ m/s} \qquad \textbf{Ans.}$$

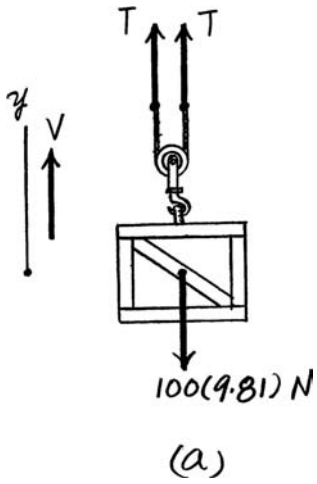

•15–17. The 5.5-Mg humpback whale is stuck on the shore due to changes in the tide. In an effort to rescue the whale, a 12-Mg tugboat is used to pull it free using an inextensible rope tied to its tail. To overcome the frictional force of the sand on the whale, the tug backs up so that the rope becomes slack and then the tug proceeds forward at 3 m/s. If the tug then turns the engines off, determine the average frictional force **F** on the whale if sliding occurs for 1.5 s before the tug stops after the rope becomes taut. Also, what is the average force on the rope during the tow?

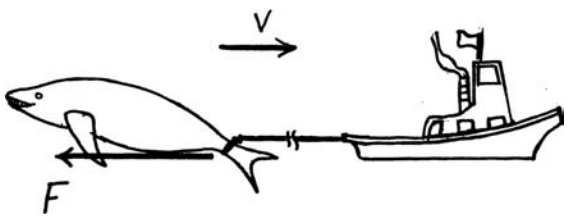

$$\left(\overset{+}{\rightarrow}\right) \qquad m_1\,(v_x)_1 + \Sigma \int F_x\, dt = m_2(v_x)_2$$

$$0 + 12\left(10^3\right)(3) - F(1.5) = 0 + 0$$

$$F = 24 \text{ kN} \qquad \textbf{Ans.}$$

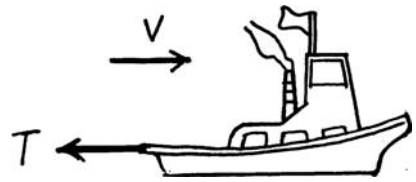

Tug:

$$\left(\overset{+}{\rightarrow}\right) \qquad m\,(v_x)_1 + \Sigma \int F_x\, dt = m\,(v_x)_2$$

$$12\left(10^3\right)(3) - T(1.5) = 0$$

$$T = 24 \text{ kN} \qquad \textbf{Ans.}$$

© 2010 Pearson Education, Inc., Upper Saddle River, NJ. All rights reserved. This material is protected under all copyright laws as they currently exist. No portion of this material may be reproduced, in any form or by any means, without permission in writing from the publisher.

15–18. The force acting on a projectile having a mass m as it passes horizontally through the barrel of the cannon is $F = C \sin(\pi t/t')$. Determine the projectile's velocity when $t = t'$. If the projectile reaches the end of the barrel at this instant, determine the length s.

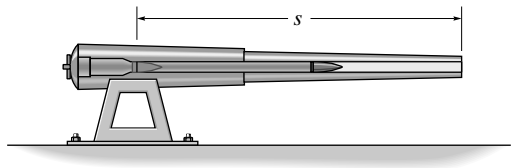

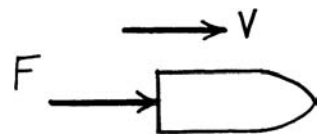

$$\left(\overset{+}{\rightarrow}\right) \qquad m(v_x)_1 + \Sigma \int F_x\, dt = m(v_x)_2$$

$$0 + \int_0^t C \sin\left(\frac{\pi t}{t'}\right) = mv$$

$$-C\left(\frac{t'}{\pi}\right)\cos\left(\frac{\pi t}{t'}\right)\Bigg|_0^t = mv$$

$$v = \frac{Ct'}{\pi m}\left(1 - \cos\left(\frac{\pi t}{t'}\right)\right)$$

When $t = t'$,

$$v_2 = \frac{2C\,t'}{\pi m}$$ `**Ans.**

$$ds = v\,dt$$

$$\int_0^s ds = \int_0^t \left(\frac{C\,t'}{\pi\,m}\right)\left(1 - \cos\left(\frac{\pi t}{t'}\right)\right) dt$$

$$s = \left(\frac{C\,t'}{\pi m}\right)\left[t - \frac{t'}{\pi}\sin\left(\frac{\pi t}{t'}\right)\right]_0^{t'}$$

$$s = \frac{Ct'^2}{\pi m}$$ **Ans.**

15–19. A 30-lb block is initially moving along a smooth horizontal surface with a speed of $v_1 = 6$ ft/s to the left. If it is acted upon by a force **F**, which varies in the manner shown, determine the velocity of the block in 15 s.

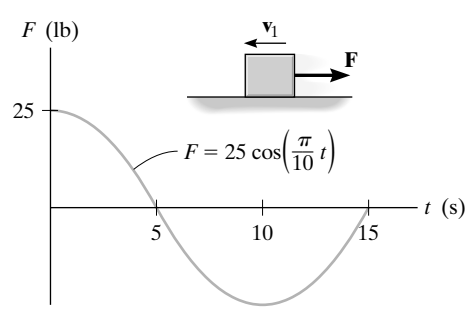

$$\left(\overset{+}{\rightarrow}\right) \qquad m(v_x)_1 + \Sigma \int F_x\, dt = m(v_x)_2$$

$$-\left(\frac{30}{32.2}\right)(6) + \int_0^{15} 25 \cos\left(\frac{\pi}{10}t\right) dt = \left(\frac{30}{32.2}\right)(v_x)_2$$

$$-5.59 + (25)\left[\sin\left(\frac{\pi}{10}t\right)\right]_0^{15}\left(\frac{10}{\pi}\right) = \left(\frac{30}{32.2}\right)(v_x)_2$$

$$-5.59 + (25)[-1]\left(\frac{10}{\pi}\right) = \left(\frac{30}{32.2}\right)(v_x)_2$$

$$(v_x)_2 = -91.4 = 91.4 \text{ ft/s} \leftarrow$$ **Ans.**

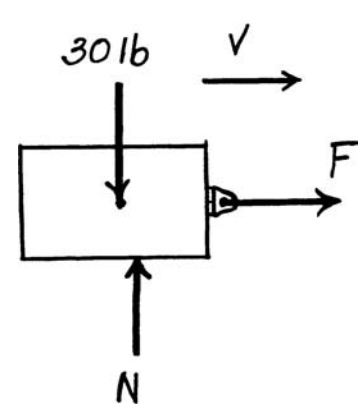

© 2010 Pearson Education, Inc., Upper Saddle River, NJ. All rights reserved. This material is protected under all copyright laws as they currently exist. No portion of this material may be reproduced, in any form or by any means, without permission in writing from the publisher.

***15–20.** Determine the velocity of each block 2 s after the blocks are released from rest. Neglect the mass of the pulleys and cord.

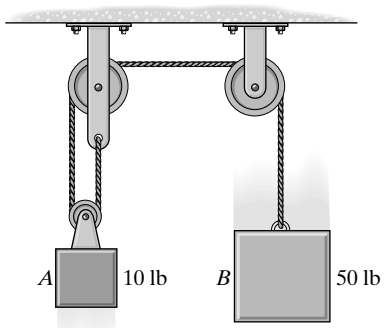

Kinematics: The speed of block A and B can be related by using the position coordinate equation.

$$2s_A + s_B = l$$

$$2v_A + v_B = 0 \qquad \textbf{[1]}$$

Principle of Linear Impulse and Momentum: Applying Eq. 15–4 to block A, we have

$$m(v_y)_1 + \Sigma \int_{t_1}^{t_2} F_y\, dt = m(v_y)_2$$

$$(+\uparrow) \qquad -\left(\frac{10}{32.2}\right)(0) + 2T(2) - 10(2) = -\left(\frac{10}{32.2}\right)(v_A) \qquad \textbf{[2]}$$

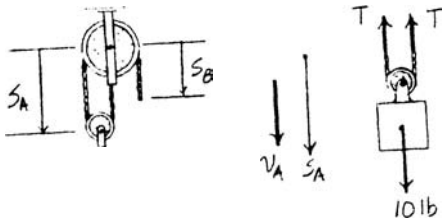

Applying Eq. 15–4 to block B, we have

$$m(v_y)_1 + \Sigma \int_{t_1}^{t_2} F_y\, dt = m(v_y)_2$$

$$(+\uparrow) \qquad -\left(\frac{50}{32.2}\right)(0) + T(2) - 50(2) = -\left(\frac{50}{32.2}\right)(v_B) \qquad \textbf{[3]}$$

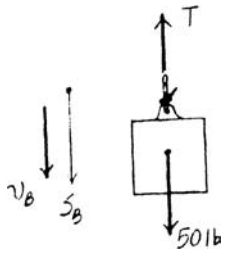

Solving Eqs. [1], [2] and [3] yields

$$v_A = -27.6 \text{ ft/s} = 27.6 \text{ ft/s} \uparrow \qquad v_B = 55.2 \text{ ft/s} \downarrow \qquad \textbf{Ans.}$$

$$T = 7.143 \text{ lb}$$

•15–21. The 40-kg slider block is moving to the right with a speed of 1.5 m/s when it is acted upon by the forces $\mathbf{F}_1$ and $\mathbf{F}_2$. If these loadings vary in the manner shown on the graph, determine the speed of the block at $t = 6$ s. Neglect friction and the mass of the pulleys and cords.

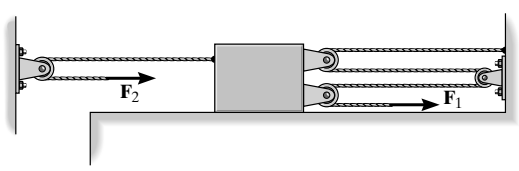

The impulses acting on the block are equal to the areas under the graph.

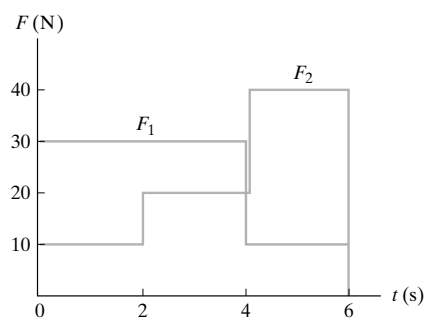

$$\left(\overset{+}{\rightarrow}\right) \qquad m(v_x)_1 + \Sigma \int F_x\, dt = m(v_x)_2$$

$$40(1.5) + 4[(30)4 + 10(6-4)] - [10(2) + 20(4-2) + 40(6-4)] = 40v_2$$

$$v_2 = 12.0 \text{ m/s} (\rightarrow) \qquad \textbf{Ans.}$$

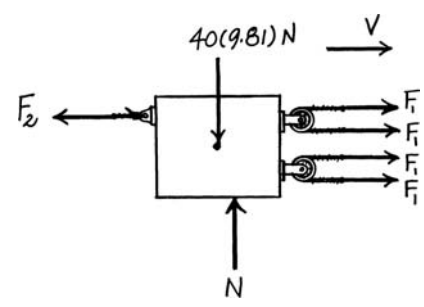

© 2010 Pearson Education, Inc., Upper Saddle River, NJ. All rights reserved. This material is protected under all copyright laws as they currently exist. No portion of this material may be reproduced, in any form or by any means, without permission in writing from the publisher.

15–22. At the instant the cable fails, the 200-lb crate is traveling up the plane with a speed of 15 ft/s. Determine the speed of the crate 2 s afterward. The coefficient of kinetic friction between the crate and the plane is $\mu_k = 0.20$.

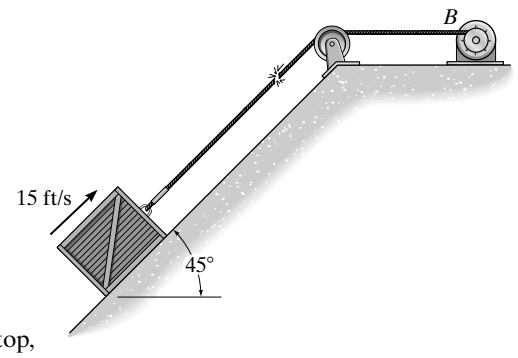

Free-Body Diagram: When the cable snaps, the crate will slide up the plane, stop, and then slide down the plane. The free-body diagram of the crate in both cases are shown in Figs. *a* and *b*. The frictional force acting on the crate in both cases can be computed from $F_f = \mu_k N = 0.2N$.

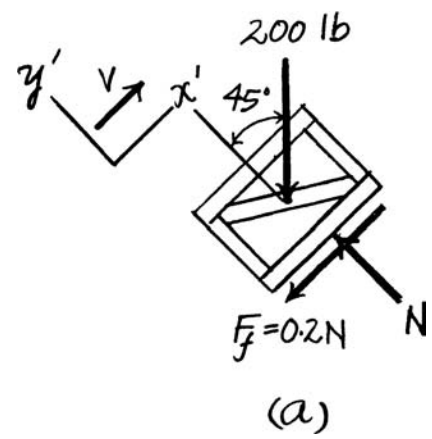

Principle of Impulse and Momentum: By referring to Fig. *a*,

$$+\nwarrow \quad m(v_1)_{y'} + \Sigma \int_{t_1}^{t_2} F_{y'}\, dt = m(v_2)_{y'}$$

$$\frac{200}{32.2}(0) + N(t') - 200 \cos 45°(t') = \; = \frac{200}{32.2}(0)$$

$$N = 141.42 \text{ lb}$$

$$+\nearrow \quad m(v_1)_{x'} + \Sigma \int_{t_1}^{t_2} F_{x'}\, dt = m(v_2)_{x'}$$

$$\frac{200}{32.2}(15) - 200 \sin 45°(t') - 0.2(141.42)(t') = \frac{200}{32.2}(0)$$

$$t' = 0.5490 \text{ s}$$

Thus, the time the crate takes to slide down the plane is $t'' = 2 - 0.5490 = 1.451$ s. Here, $N = 141.42$ for both cases. By referring to Fig. *b*,

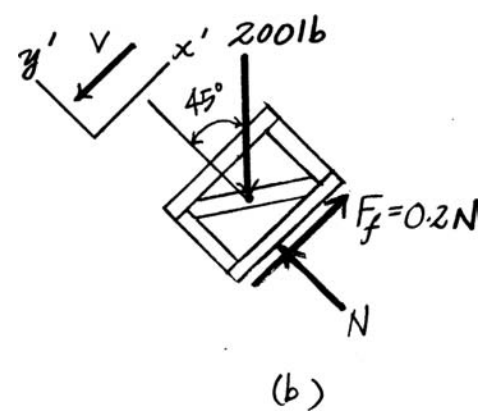

$$+\nearrow \quad m(v_1)_{x'} + \Sigma \int_{t_1}^{t_2} F_{x'}\, dt = m(v_2)_{x'}$$

$$\frac{200}{32.2}(0) + 0.2(141.42)(1.451) - 200 \sin 45°(1.451) = \frac{200}{32.2}(-v)$$

$$v = 26.4 \text{ ft/s} \qquad \textbf{Ans.}$$

© 2010 Pearson Education, Inc., Upper Saddle River, NJ. All rights reserved. This material is protected under all copyright laws as they currently exist. No portion of this material may be reproduced, in any form or by any means, without permission in writing from the publisher.

15–23. Forces $\mathbf{F}_1$ and $\mathbf{F}_2$ vary as shown by the graph. The 5-kg smooth disk is traveling to the left with a speed of 3 m/s when $t = 0$. Determine the magnitude and direction of the disk's velocity when $t = 4$ s.

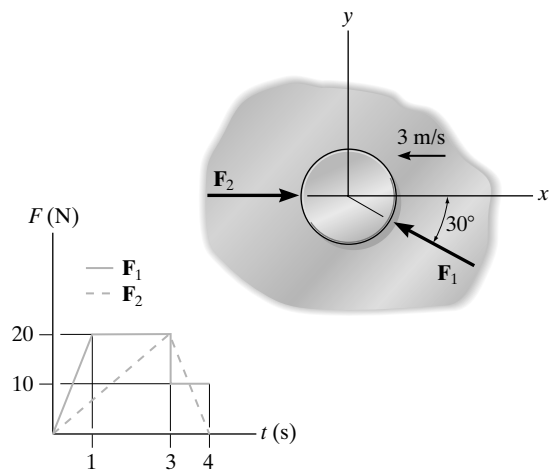

Principle of Impulse and Momentum: The impulse generated by $\mathbf{F}_1$ and $\mathbf{F}_2$ during the time period $0 \le t \le 4$ s is equal to the area under the F_1 vs t and F_2 vs t graphs, i.e., $I_1 = \frac{1}{2}(20)(1) + 20(3-1) + 10(4-3) = 60\text{N}\cdot\text{s}$ and $I_2 = \frac{1}{2}(20)(3-0) + \frac{1}{2}(20)(4-3) = 40\text{ N}\cdot\text{s}$. By referring to the impulse and momentum diagram shown in Fig. *a*

$$\left(\overset{+}{\rightarrow}\right) \qquad m(v_1)_x + \Sigma\int_{t_1}^{t^2} F_x\,dt = m(v_2)_x$$

$$-5(3) + 40 - 60\cos 30^\circ = 5v_x$$

$$v_x = -5.392\text{ m/s} = 5.392\text{ m/s} \leftarrow$$

$$\left(+\uparrow\right) \qquad m(v_1)_y + \Sigma\int_{t_1}^{t_2} F_y\,dt = m(v_2)_y$$

$$0 + 60\sin 30^\circ = 5v_y$$

$$v_y = 6\text{ m/s}$$

Thus, the magnitude of $\mathbf{v}$,

$$v = \sqrt{v_x{}^2 + v_y{}^2} = \sqrt{5.392^2 + 6^2} = 8.07\text{ m/s} \qquad \textbf{Ans.}$$

and the direction angle θ makes with the horizontal is

$$\theta = \tan^{-1}\left(\frac{v_y}{v_x}\right) = \tan^{-1}\left(\frac{6}{5.392}\right) = 48.1^\circ \qquad \textbf{Ans.}$$

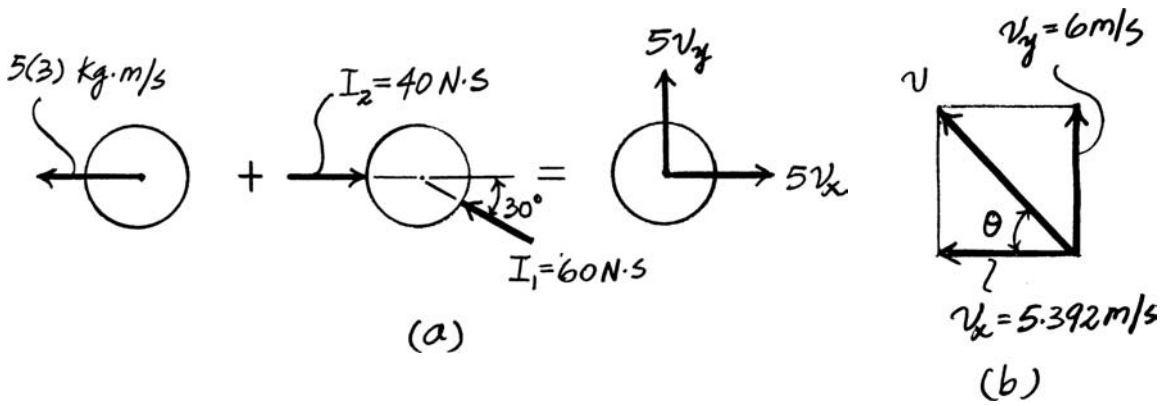

© 2010 Pearson Education, Inc., Upper Saddle River, NJ. All rights reserved. This material is protected under all copyright laws as they currently exist. No portion of this material may be reproduced, in any form or by any means, without permission in writing from the publisher.

***15–24.** A 0.5-kg particle is acted upon by the force $\mathbf{F} = \{2t^2\mathbf{i} - (3t + 3)\mathbf{j} + (10 - t^2)\mathbf{k}\}$ N, where t is in seconds. If the particle has an initial velocity of $\mathbf{v}_0 = \{5\mathbf{i} + 10\mathbf{j} + 20\mathbf{k}\}$ m/s, determine the magnitude of the velocity of the particle when $t = 3$ s.

Principle of Impulse and Momentum:

$$m\mathbf{v}_1 + \Sigma \int_{t_1}^{t_2} \mathbf{F}dt = m\mathbf{v}_2$$

$$0.5(5\mathbf{i} + 10\mathbf{j} + 20\mathbf{k}) + \int_0^{3\text{ s}} \left[2t^2\mathbf{i} - \left(3t + 3\right)\mathbf{j} + \left(10 - t^2\right)\mathbf{k}\right] = 0.5\mathbf{v}_2$$

$$\mathbf{v}_2 = \left\{41\mathbf{i} - 35\mathbf{j} + 62\mathbf{k}\right\} \text{ m/s}$$

The magnitude of $\mathbf{v}_2$ is given by

$$v_2 = \sqrt{\left(v_2\right)_x{}^2 + \left(v_2\right)_y{}^2 + \left(v_2\right)_z{}^2} = \sqrt{\left(41\right)^2 + \left(-35\right)^2 + \left(62\right)^2}$$

$$= 82.2 \text{ m/s} \qquad \textbf{Ans.}$$

•15–25. The train consists of a 30-Mg engine E, and cars A, B, and C, which have a mass of 15 Mg, 10 Mg, and 8 Mg, respectively. If the tracks provide a traction force of $F = 30$ kN on the engine wheels, determine the speed of the train when $t = 30$ s, starting from rest. Also, find the horizontal coupling force at D between the engine E and car A. Neglect rolling resistance.

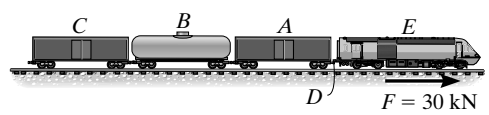

Principle of Impulse and Momentum: By referring to the free-body diagram of the entire train shown in Fig. a, we can write

$$\left(\overset{+}{\rightarrow}\right) \qquad m\left(v_1\right)_x + \Sigma \int_{t_1}^{t_2} F_x dt = m\left(v_2\right)_x$$

$$63\,000(0) + 30(10^3)(30) = 63\,000v$$

$$v = 14.29 \text{ m/s} \qquad \textbf{Ans.}$$

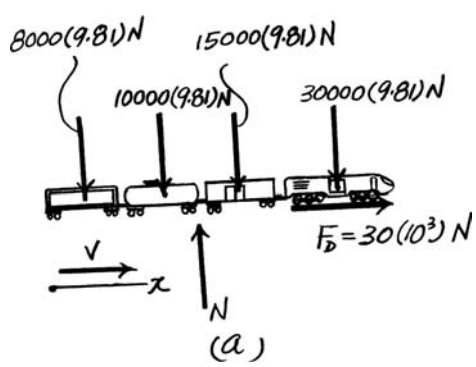

Using this result and referring to the free-body diagram of the train's car shown in Fig. b,

$$\left(\overset{+}{\rightarrow}\right) \qquad m\left(v_1\right)_x + \Sigma \int_{t_1}^{t_2} F_x\, dt = m\left(v_2\right)_x$$

$$33000(0) + F_D(30) = 33\,000\left(14.29\right)$$

$$F_D = 15\,714.29 \text{ N} = 15.7 \text{ kN} \qquad \textbf{Ans.}$$

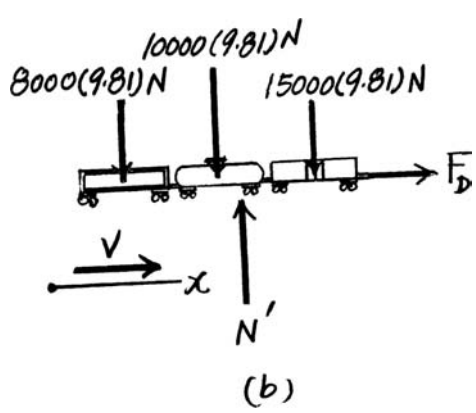

© 2010 Pearson Education, Inc., Upper Saddle River, NJ. All rights reserved. This material is protected under all copyright laws as they currently exist. No portion of this material may be reproduced, in any form or by any means, without permission in writing from the publisher.

15–26. The motor M pulls on the cable with a force of **F**, which has a magnitude that varies as shown on the graph. If the 20-kg crate is originally resting on the floor such that the cable tension is zero at the instant the motor is turned on, determine the speed of the crate when $t = 6$ s. *Hint*: First determine the time needed to begin lifting the crate.

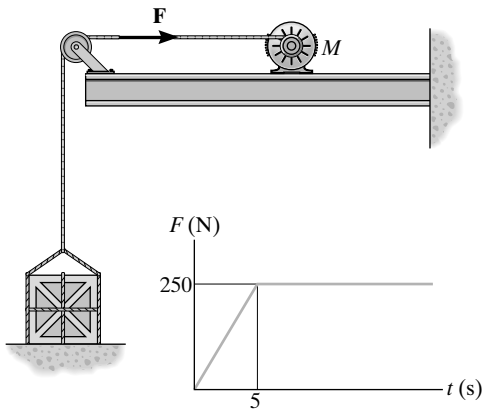

Equations of Equilibrium: For the period $0 \le t < 5$ s, $F = \frac{250}{5}t = (50t)$ N. The time needed for the motor to move the crate is given by

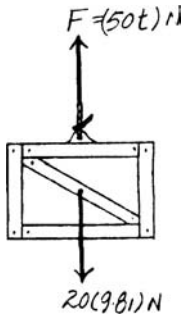

$$+\uparrow \Sigma F_y = 0; \qquad 50t - 20(9.81) = 0 \qquad t = 3.924 \text{ s} < 5 \text{ s}$$

Principle of Linear Impulse and Momentum: The crate starts to move 3.924 s after the motor is turned on. Applying Eq. 15–4, we have

$$m(v_y)_1 + \Sigma \int_{t_1}^{t_2} F_y\, dt = m(v_y)_2$$

$$(+\uparrow) \qquad 20(0) + \int_{3.924\text{ s}}^{5\text{ s}} 50t dt + 250(6 - 5) - 20(9.81)(6 - 3.924) = 20v$$

$$v = 4.14 \text{ m/s} \qquad \textbf{Ans.}$$

15–27. The winch delivers a horizontal towing force **F** to its cable at A which varies as shown in the graph. Determine the speed of the 70-kg bucket when $t = 18$ s. Originally the bucket is moving upward at $v_1 = 3$ m/s.

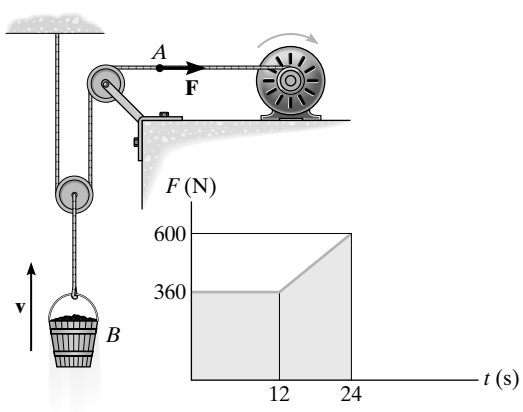

Principle of Linear Impulse and Momentum: For the time period $12 \text{ s} \le t < 18$ s, $\frac{F - 360}{t - 12} = \frac{600 - 360}{24 - 12}$, $F = (20t + 120)$ N. Applying Eq. 15–4 to bucket B, we have

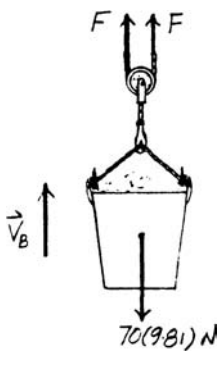

$$m(v_y)_1 + \Sigma \int_{t_1}^{t_2} F_y\, dt = m(v_y)_2$$

$$(+\uparrow) \qquad 70(3) + 2\left[360(12) + \int_{12\,s}^{18\,s} (20t + 120)dt\right] - 70(9.81)(18) = 70v_2$$

$$v_2 = 21.8 \text{ m/s} \qquad \textbf{Ans.}$$

© 2010 Pearson Education, Inc., Upper Saddle River, NJ. All rights reserved. This material is protected under all copyright laws as they currently exist. No portion of this material may be reproduced, in any form or by any means, without permission in writing from the publisher.

***15–28.** The winch delivers a horizontal towing force **F** to its cable at A which varies as shown in the graph. Determine the speed of the 80-kg bucket when $t = 24$ s. Originally the bucket is released from rest.

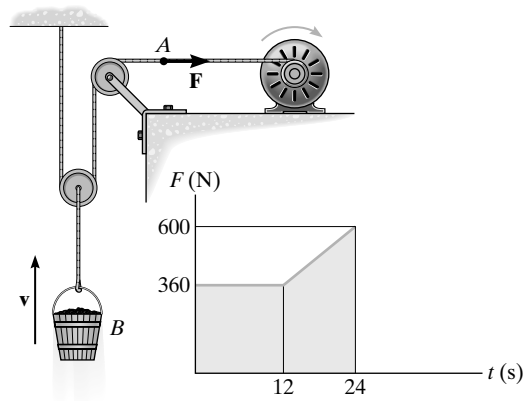

Principle of Linear Impulse and Momentum: The total impluse exerted on bucket B can be obtained by evaluating the area under the F–t graph. Thus, $I = \Sigma \int_{t_1}^{t_2} F_y\, dt = 2\left[360(12) + \frac{1}{2}(360 + 600)(24 - 12)\right] = 20160\ \text{N}\cdot\text{s}$. Applying Eq. 15–4 to the bucket B, we have

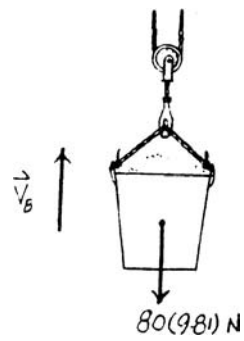

$$m(v_y)_1 + \Sigma \int_{t_1}^{t_2} F_y\, dt = m(v_y)_2$$

$$(+\uparrow) \qquad 80(0) + 20160 - 80(9.81)(24) = 80v_2$$

$$v_2 = 16.6\text{m/s} \qquad \textbf{Ans.}$$

© 2010 Pearson Education, Inc., Upper Saddle River, NJ. All rights reserved. This material is protected under all copyright laws as they currently exist. No portion of this material may be reproduced, in any form or by any means, without permission in writing from the publisher.

•15–29. The 0.1-lb golf ball is struck by the club and then travels along the trajectory shown. Determine the average impulsive force the club imparts on the ball if the club maintains contact with the ball for 0.5 ms.

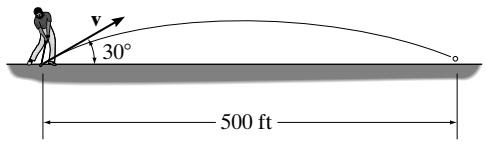

Kinematics: By considering the x-motion of the golf ball, Fig. a,

$$\left(\overset{+}{\rightarrow}\right) \qquad s_x = \left(s_0\right) + \left(v_0\right)_x t$$

$$500 = 0 + v\cos 30^\circ\, t$$

$$t = \frac{500}{v\cos 30^\circ}$$

Subsequently, using the result of t and considering the y-motion of the golf ball,

$$\left(+\uparrow\right) \qquad s_y = \left(s_0\right)_y + \left(v_0\right)_y t + \frac{1}{2}a_y t^2$$

$$0 = 0 + v\sin 30^\circ\left(\frac{500}{v\cos 30^\circ}\right) + \frac{1}{2}(-32.2)\left(\frac{500}{v\cos 30^\circ}\right)^2$$

$$v = 136.35 \text{ ft/s}$$

Principle of Impulse and Momentum: Here, the impulse generated by the weight of the golf ball is very small compared to that generated by the force of the impact. Hence, it can be neglected. By referring to the impulse and momentum diagram shown in Fig. b,

$$(\;) \qquad m\left(v_1\right)_{x'} + \Sigma\int_{t_1}^{t_2} F_{x'}\,dt = m\left(v_2\right)_{x'}$$

$$0 + F_{\text{avg}}(0.5)(10^{-3}) = \frac{0.1}{32.2}\left(136.35\right)$$

$$F_{\text{avg}} = 847 \text{ lb} \qquad \textbf{Ans.}$$

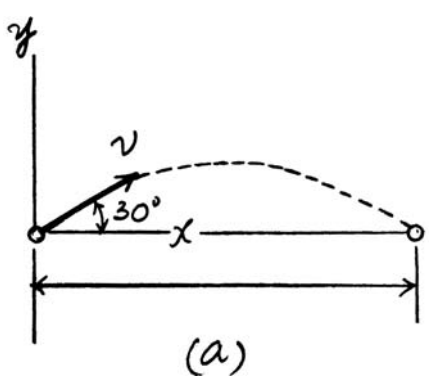

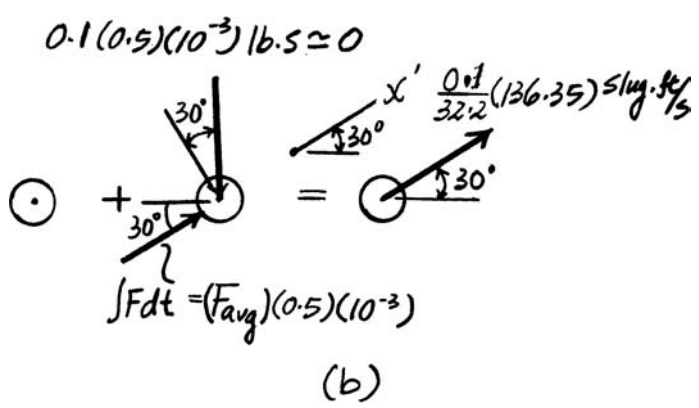

© 2010 Pearson Education, Inc., Upper Saddle River, NJ. All rights reserved. This material is protected under all copyright laws as they currently exist. No portion of this material may be reproduced, in any form or by any means, without permission in writing from the publisher.

15–30. The 0.15-kg baseball has a speed of $v = 30$ m/s just before it is struck by the bat. It then travels along the trajectory shown before the outfielder catches it. Determine the magnitude of the average impulsive force imparted to the ball if it is in contact with the bat for 0.75 ms.

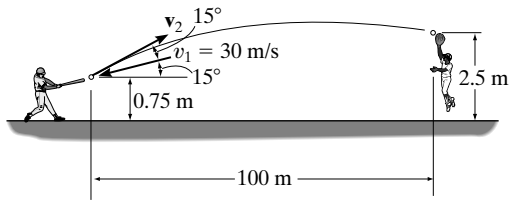

$(\overset{+}{\rightarrow})$ $$s_x = (s_0)_x + (v_0)_x t$$

$$100 = 0 + v\cos 30^\circ\, t$$

$$t = \frac{100}{v\cos 30^\circ}$$

Subsequently, using the result of t and considering the y-motion of the golf ball.

$(+\uparrow)$ $$x_y = (s_0)_y + (v_0)_y t + \frac{1}{2}a_y t^2$$

$$1.75 = 0 + v\sin 30^\circ\left(\frac{100}{v\cos 30^\circ}\right) + \frac{1}{2}(-9.81)\left(\frac{100}{v\cos 30^\circ}\right)^2$$

$$v = 34.18 \text{ m/s}$$

Principle of Impulse and Momentum: Here, the impulse generated by the weight of the baseball is very small compared to that generated by the force of the impact. Hence, it can be neglected. By referring to the impulse and momentum diagram shown in Fig. *b,*

$(\overset{+}{\rightarrow})$ $$m(v_1)_x + \Sigma\int_{t_1}^{t_2} F_x\,dt = m(v_2)_x$$

$$-0.15(30)\cos 15^\circ + \left(F_{\text{avg}}\right)_x (0.75)\left(10^{-3}\right) = 0.15(34.18)\cos 30^\circ$$

$$\left(F_{\text{avg}}\right)_x = 11\,715.7 \text{ N}$$

$(+\uparrow)$ $$m(v_1)_y + \Sigma\int_{t_1}^{t_2} F_y\,dt = m(v_2)_y$$

$$-0.15(30)\sin 15^\circ + \left(F_{\text{avg}}\right)_y (0.75)\left(10^{-3}\right) = 0.15(34.18)\sin 30^\circ$$

$$\left(F_{\text{avg}}\right)_y = 4970.9 \text{ N}$$

Thus,

$$F_{\text{avg}} = \sqrt{\left(F_{\text{avg}}\right)_x^2 + \left(F_{\text{avg}}\right)_y^2} = \sqrt{11715.7^2 + 4970.9^2}$$

$$= 12.7 \text{ kN}$$ **Ans.**

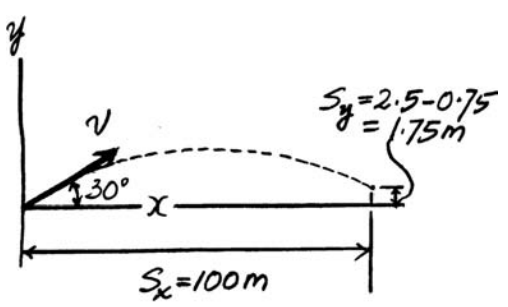

(a)

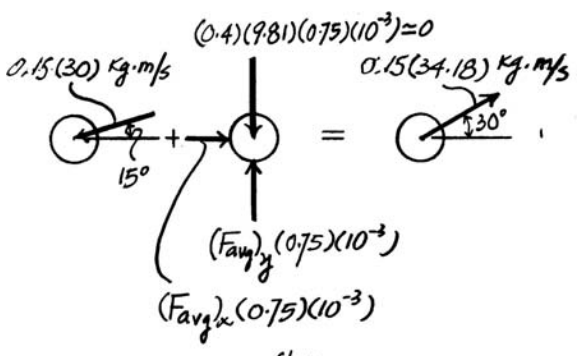

(b)

© 2010 Pearson Education, Inc., Upper Saddle River, NJ. All rights reserved. This material is protected under all copyright laws as they currently exist. No portion of this material may be reproduced, in any form or by any means, without permission in writing from the publisher.

15–31. The 50-kg block is hoisted up the incline using the cable and motor arrangement shown. The coefficient of kinetic friction between the block and the surface is $\mu_k = 0.4$. If the block is initially moving up the plane at $v_0 = 2$ m/s, and at this instant ($t = 0$) the motor develops a tension in the cord of $T = (300 + 120\sqrt{t})$ N, where t is in seconds, determine the velocity of the block when $t = 2$ s.

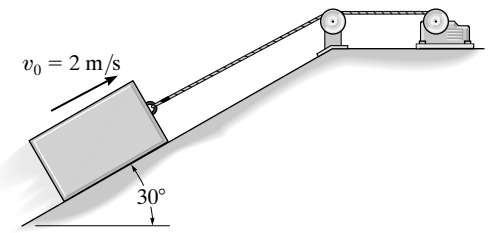

$+\nwarrow \Sigma F_x = 0; \qquad N_B - 50(9.81)\cos 30° = 0 \qquad N_B = 424.79$ N

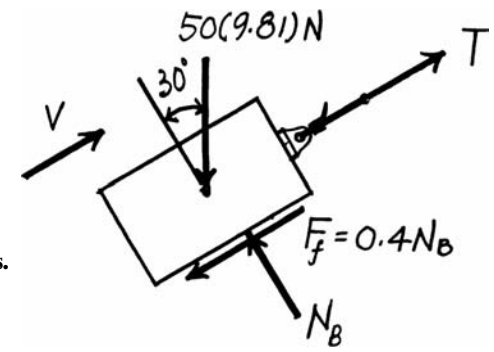

$$(+\nearrow) \qquad m(v_x)_1 + \Sigma \int F_x\, dt = m(v_x)_2$$

$$50(2) + \int_0^2 \left(300 + 120\sqrt{t}\right) dt - 0.4(424.79)(2) - 50(9.81)\sin 30°(2) = 50v_2$$

$$v_2 = 192 \text{ m/s}$$ **Ans.**

***15–32.** The 10-lb cannon ball is fired horizontally by a 500-lb cannon as shown. If the muzzle velocity of the ball is 2000 ft/s, measured relative to the ground, determine the recoil velocity of the cannon just after firing. If the cannon rests on a smooth support and is to be stopped after it has recoiled a distance of 6 in., determine the required stiffness k of the two identical springs, each of which is originally unstretched.

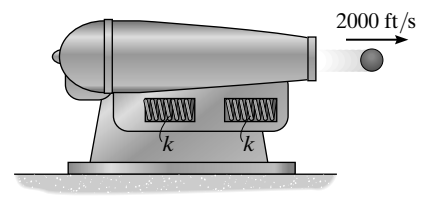

Free-Body Diagram: The free-body diagram of the cannon and ball system is shown in Fig. *a*. Here, the spring force $2\mathbf{F}_{sp}$ is nonimpulsive since the spring acts as a shock absorber. The pair of impulsive forces **F** resulting from the explosion cancel each other out since they are internal to the system

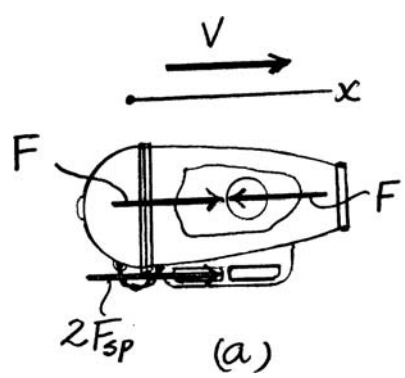

Conservation of Linear Momentum: Since the resultant of the impulsice force along the x axis is zero, the linear momentum of the system is conserved along the x axis.

$$\left(\overset{+}{\rightarrow}\right) \qquad m_C(v_C)_1 + m_b(v_b)_1 = m_C(v_C)_2 + m_b(v_b)_2$$

$$\frac{500}{32.2}(0) + \frac{10}{32.2}(0) = \frac{500}{32.2}(v_C)_2 + \frac{10}{32.2}(2000)$$

$$(v_C)_2 = -40 \text{ ft/s} = 40 \text{ ft/s} \leftarrow$$ **Ans.**

Conservation of Energy: The initial and final elastic potential energy in each spring are $(V_e)_i = \frac{1}{2}ks_i^2 = 0$ and $(V_e)_f = \frac{1}{2}ks_f^2 = \frac{1}{2}k(0.5^2) = 0.125k$. By referring to Fig. *a*,

$$T_i + V_i = T_f + V_f$$

$$\frac{1}{2}m_C(v_C)_i^2 + 2(V_e)_i = \frac{1}{2}m_C(v_C)_f^2 + 2(V_e)_f$$

$$\frac{1}{2}\left(\frac{500}{32.2}\right)\left(40^2\right) + 2(0) = 0 + 2(0.125k)$$

$$k = 49\,689.44 \text{ lb/ft} = 49.7 \text{ kip/ft}$$ **Ans.**

© 2010 Pearson Education, Inc., Upper Saddle River, NJ. All rights reserved. This material is protected under all copyright laws as they currently exist. No portion of this material may be reproduced, in any form or by any means, without permission in writing from the publisher.

15–33. A railroad car having a mass of 15 Mg is coasting at 1.5 m/s on a horizontal track. At the same time another car having a mass of 12 Mg is coasting at 0.75 m/s in the opposite direction. If the cars meet and couple together, determine the speed of both cars just after the coupling. Find the difference between the total kinetic energy before and after coupling has occurred, and explain qualitatively what happened to this energy.

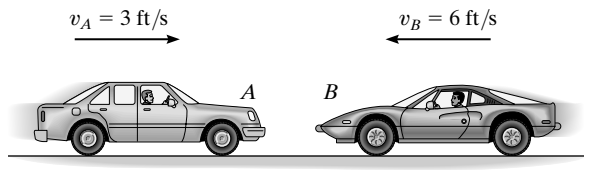

$(\overset{+}{\rightarrow})$ $\quad \Sigma m v_1 = \Sigma m v_2$

$$15\,000(1.5) - 12\,000(0.75) = 27\,000(v_2)$$

$$v_2 = 0.5 \text{ m/s}$$ **Ans.**

$$T_1 = \frac{1}{2}(15\,000)(1.5)^2 + \frac{1}{2}(12\,000)(0.75)^2 = 20.25 \text{ kJ}$$

$$T_2 = \frac{1}{2}(27\,000)(0.5)^2 = 3.375 \text{ kJ}$$

$$\Delta T = T_1 - T_2$$

$$= 20.25 - 3.375 = 16.9 \text{ kJ}$$ **Ans.**

This energy is dissipated as noise, shock, and heat during the coupling.

15–34. The car A has a weight of 4500 lb and is traveling to the right at 3 ft/s. Meanwhile a 3000-lb car B is traveling at 6 ft/s to the left. If the cars crash head-on and become entangled, determine their common velocity just after the collision. Assume that the brakes are not applied during collision.

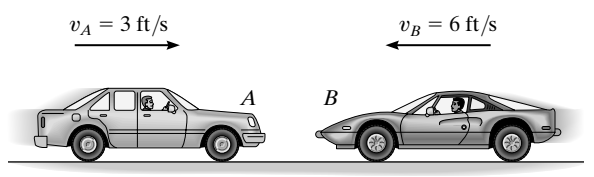

$(\overset{+}{\rightarrow})$ $\quad m_A(v_A)_1 + m_B(v_B)_1 = (m_A + m_B)v_2$

$$\frac{4500}{32.2}(3) - \frac{3000}{32.2}(6) = \frac{7500}{32.2}v_2$$

$$v_2 = -0.600 \text{ ft/s} = 0.600 \text{ ft/s} \leftarrow$$ **Ans.**

© 2010 Pearson Education, Inc., Upper Saddle River, NJ. All rights reserved. This material is protected under all copyright laws as they currently exist. No portion of this material may be reproduced, in any form or by any means, without permission in writing from the publisher.

15–35. The two blocks A and B each have a mass of 5 kg and are suspended from parallel cords. A spring, having a stiffness of $k = 60$ N/m, is attached to B and is compressed 0.3 m against A as shown. Determine the maximum angles θ and ϕ of the cords when the blocks are released from rest and the spring becomes unstretched.

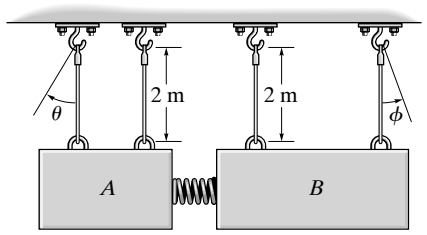

$(\overset{+}{\rightarrow})$ $\quad \Sigma mv_1 = \Sigma mv_2$

$$0 + 0 = -5v_A + 5v_B$$

$$v_A = v_B = v$$

Just before the blocks begin to rise:

$$T_1 + V_1 = T_2 + V_2$$

$$(0 + 0) + \frac{1}{2}(60)(0.3)^2 = \frac{1}{2}(5)(v)^2 + \frac{1}{2}(5)(v)^2 + 0$$

$$v = 0.7348 \text{ m/s}$$

For A or B: Datum at lowest point.

$$T_1 + V_1 = T_2 + V_2$$

$$\frac{1}{2}(5)(0.7348)^2 + 0 = 0 + 5(9.81)(2)(1 - \cos\theta)$$

$$\theta = \phi = 9.52° \qquad \textbf{Ans.}$$

© 2010 Pearson Education, Inc., Upper Saddle River, NJ. All rights reserved. This material is protected under all copyright laws as they currently exist. No portion of this material may be reproduced, in any form or by any means, without permission in writing from the publisher.

***15–36.** Block A has a mass of 4 kg and B has a mass of 6 kg. A spring, having a stiffness of $k = 40$ N/m, is attached to B and is compressed 0.3 m against A as shown. Determine the maximum angles θ and ϕ of the cords after the blocks are released from rest and the spring becomes unstretched.

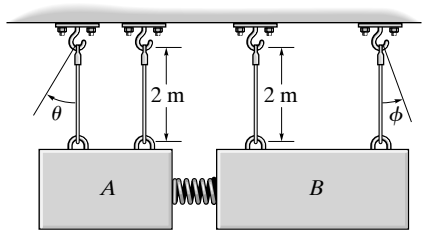

$(\overset{+}{\rightarrow})$ $\quad \Sigma m_1 v_1 = \Sigma m_2 v_2$

$$0 + 0 = 6v_B - 4v_A$$

$$v_A = 1.5v_B$$

Just before the blocks begin to rise:

$$T_1 + V_1 = T_2 + V_2$$

$$(0 + 0) + \frac{1}{2}(40)(0.3)^2 = \frac{1}{2}(4)(v_A)^2 + \frac{1}{2}(6)(v_B)^2 + 0$$

$$3.6 = 4v_A^2 + 6v_B^2$$

$$3.6 = 4(1.5v_B)^2 + 6v_B^2$$

$$v_B = 0.4899 \text{ m/s} \qquad v_A = 0.7348 \text{ m/s}$$

For A:

Datum at lowest point.

$$T_1 + V_1 = T_2 + V_2$$

$$\frac{1}{2}(4)(0.7348)^2 + 0 = 0 + 4(9.81)(2)(1 - \cos\theta)$$

$\theta = 9.52°$ **Ans.**

For B:

Datum at lowest point

$$T_1 + V_1 = T_2 + V_2$$

$$\frac{1}{2}(6)(0.4899)^2 + 0 = 0 + 6(9.81)(2)(1 - \cos\phi)$$

$\phi = 6.34°$ **Ans.**

© 2010 Pearson Education, Inc., Upper Saddle River, NJ. All rights reserved. This material is protected under all copyright laws as they currently exist. No portion of this material may be reproduced, in any form or by any means, without permission in writing from the publisher.

•15–37. The winch on the back of the Jeep A is turned on and pulls in the tow rope at 2 m/s measured relative to the Jeep. If both the 1.25-Mg car B and the 2.5-Mg Jeep A are free to roll, determine their velocities at the instant they meet. If the rope is 5 m long, how long will this take?

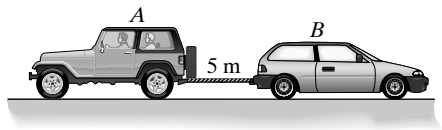

$$\left(\overset{+}{\rightarrow}\right) \qquad 0 + 0 = m_A v_A - m_B v_B \qquad \textbf{(1)}$$

$$0 = 2.5\left(10^3\right) v_A - 1.25\left(10^3\right) v_B$$

However, $\mathbf{v}_A = \mathbf{v}_B + \mathbf{v}_{A/B}$

$$\left(\overset{+}{\rightarrow}\right) \qquad v_A = -v_B + 2 \qquad \textbf{(2)}$$

Substituting Eq. (2) into (1) yields:

$v_B = 1.33\text{m/s}$ **Ans.**

$v_A = 0.667\ \text{m/s}$ **Ans.**

Kinematics:

$$\left(\overset{+}{\rightarrow}\right) \qquad s_{A/B} = v_{A/B}\, t$$

$$5 = 2t$$

$t = 2.5\ \text{s}$ **Ans.**

© 2010 Pearson Education, Inc., Upper Saddle River, NJ. All rights reserved. This material is protected under all copyright laws as they currently exist. No portion of this material may be reproduced, in any form or by any means, without permission in writing from the publisher.

15–38. The 40-kg package is thrown with a speed of 4 m/s onto the cart having a mass of 20 kg. If it slides on the smooth surface and strikes the spring, determine the velocity of the cart at the instant the package fully compresses the spring. What is the maximum compression of the spring? Neglect rolling resistance of the cart.

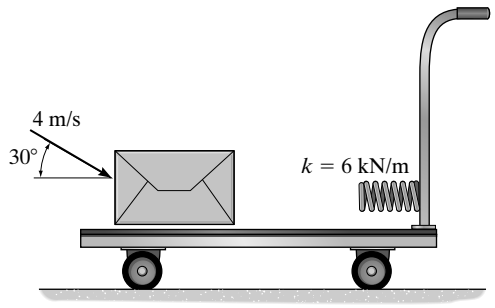

Conservation of Linear Momentum: By referring to the free-body diagram of the package and cart system shown in Fig. *a*, we notice the pair of impulsive forces **F** generated during the impact cancel each other since they are internal to the system. Thus, the resultant of the impulsive forces along the x axis is zero. As a result, the linear momentum of the system is conserved along the x axis. The cart does not move after the impact until the package strikes the spring. Thus,

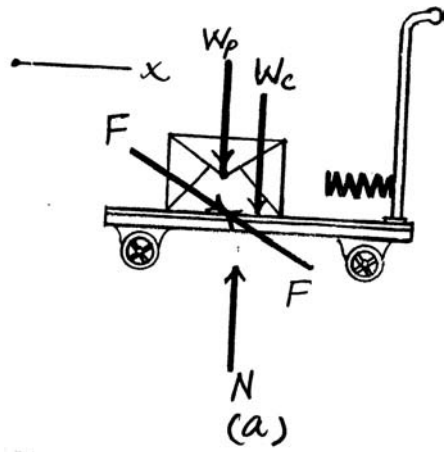

$$\left(\overset{+}{\rightarrow}\right) \qquad m_p\left[\left(v_p\right)_1\right]_x + m_c\left(v_c\right)_1 = m_p\left(v_p\right)_2 + m_c\left(v_c\right)_2$$

$$40\left(4\cos 30^\circ\right) + 0 = 40\left(v_p\right)_2 + 0$$

$$\left(v_p\right)_2 = 3.464 \text{ m/s} \rightarrow$$

When the spring is fully compressed, the package momentarily stops sliding on the cart. At this instant, the package and the cart move with a common speed.

$$\left(\overset{+}{\rightarrow}\right) \qquad m_p\left(v_p\right)_2 + m_c\left(v_c\right)_2 = \left(m_p + m_c\right)v_3$$

$$40(3.464) + 0 = \left(40 + 20\right)v_3$$

$$v_3 = 2.309 \text{ m/s} = 2.31 \text{ m/s} \qquad \textbf{Ans.}$$

Conservation of Energy: We will consider the conservation of energy of the system. The initial and final elastic potential energies of the spring are $\left(V_e\right)_2 = \frac{1}{2}ks_2{}^2 = 0$ and $\left(V_e\right)_3 = \frac{1}{2}ks_3{}^2 = \frac{1}{2}\left(6000\right)s_{\max}{}^2 = 3000s_{\max}{}^2$.

$$T_2 + V_2 = T_3 + V_3$$

$$\left[\frac{1}{2}m_p\left(v_p\right)^2 + \frac{1}{2}m_c\left(v_c\right)_2{}^2\right] + \left(V_e\right)_2 = \frac{1}{2}\left(m_p + m_p\right)v_3{}^2 + \left(V_e\right)_3$$

$$\left[\frac{1}{2}(40)(3.464^2) + 0\right] + 0 = \frac{1}{2}\left(40 + 20\right)\left(2.309^2\right) + 3000s_{\max}{}^2$$

$$s_{\max} = 0.1632 \text{ m} = 163 \text{ mm} \qquad \textbf{Ans.}$$

© 2010 Pearson Education, Inc., Upper Saddle River, NJ. All rights reserved. This material is protected under all copyright laws as they currently exist. No portion of this material may be reproduced, in any form or by any means, without permission in writing from the publisher.

15–39. Two cars A and B have a mass of 2 Mg and 1.5 Mg, respectively. Determine the magnitudes of $\mathbf{v}_A$ and $\mathbf{v}_B$ if the cars collide and stick together while moving with a common speed of 50 km/h in the direction shown.

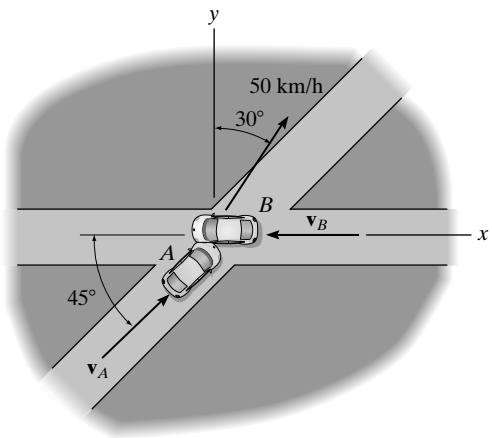

Conservation of Linear Momentum: Since the pair of impulsice forces $\mathbf{F}$ generated during the impact are internal to the system of cars A and B, they cancel each other out. Thus, the resultant impulsive force along the x and y axes are zero. Consequently, the linear momentum of the system is conserved along the x and y axes. The common speed of the system just after the impact is $v_2 = \left[50(10^3)\,\frac{\text{m}}{\text{h}}\right]\left(\frac{1\text{ h}}{3600\text{ s}}\right) = 13.89\text{ m/s}$. Thus, we can write

$$\left(\overset{+}{\rightarrow}\right) \qquad m_A(v_A)_x + \left[-m_B(v_B)_x\right] = (m_A + m_B)(v_2)_x$$

$$2000v_A\cos 45° - 1500v_B = (2000 + 1500)(13.89\sin 30°)$$

$$1414.21v_A - 1500v_B = 24305.56 \qquad \textbf{(1)}$$

and

$$\left(+\uparrow\right) \qquad m_A(v_A)_y + m_B(v_B)_y = (m_A + m_B)(v_2)_y$$

$$2000v_A\sin 45° + 0 = (2000 + 1500)(13.89\cos 30°)$$

$$v_A = 29.77\text{ m/s} = 29.8\text{ m/s} \qquad \textbf{Ans.}$$

Substituting the result of $\mathbf{v}_A$ into Eq. (1),

$$v_B = 11.86\text{ m/s} = 11.9\text{ m/s} \qquad \textbf{Ans.}$$

© 2010 Pearson Education, Inc., Upper Saddle River, NJ. All rights reserved. This material is protected under all copyright laws as they currently exist. No portion of this material may be reproduced, in any form or by any means, without permission in writing from the publisher.

***15–40.** A 4-kg projectile travels with a horizontal velocity of 600 m/s before it explodes and breaks into two fragments A and B of mass 1.5 kg and 2.5 kg, respectively. If the fragments travel along the parabolic trajectories shown, determine the magnitude of velocity of each fragment just after the explosion and the horizontal distance d_A where segment A strikes the ground at C.

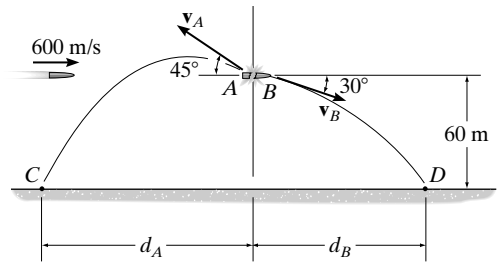

Conservation of Linear Momentum: By referring to the free-body diagram of the projectile just after the explosion shown in Fig. a, we notice that the pair of impulsive forces $\mathbf{F}$ generated during the explosion cancel each other since they are internal to the system. Here, $\mathbf{W}_A$ and $\mathbf{W}_B$ are non-impulsive forces. Since the resultant impulsive force along the x and y axes is zero, the linear momentum of the system is conserved along these two axes.

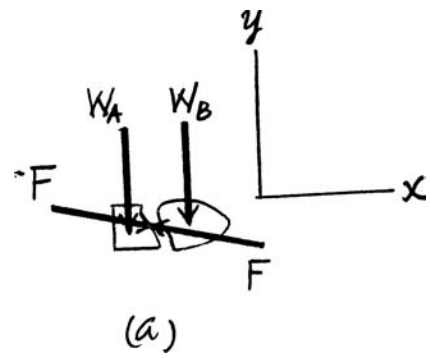

$$\left(\overset{+}{\rightarrow}\right) \qquad mv_x = m_A(v_A)_x + m_B(v_B)_x$$

$$4(600) = -1.5v_A \cos 45° + 2.5v_B \cos 30°$$

$$2.165v_B - 1.061v_A = 2400 \qquad \textbf{(1)}$$

$$(+\uparrow) \qquad mv_y = m_A(v_A)_y + m_B(v_B)_y$$

$$0 = 1.5v_A \sin 45° - 2.5v_B \sin 30°$$

$$v_B = 0.8485v_A \qquad \textbf{(2)}$$

Solving Eqs. (1) and (2) yields

$$v_A = 3090.96 \text{ m/s} = 3.09(10^3) \text{ m/s} \qquad \textbf{Ans.}$$

$$v_B = 2622.77 \text{ m/s} = 2.62(10^3) \text{ m/s} \qquad \textbf{Ans.}$$

By considering the x and y motion of segment A,

$$(+\uparrow) \qquad s_y = (s_0)_y + (v_0)_y t + \frac{1}{2} a_y t^2$$

$$-60 = 0 + 3090.96 \sin 45° \, t_{AC} + \frac{1}{2}(-9.81)t_{AC}{}^2$$

$$4.905t_{AC}{}^2 - 2185.64t_{AC} - 60 = 0$$

Solving for the positive root of this equation,

$$t_{AC} = 445.62 \text{ s}$$

and

$$\left(\overset{+}{\leftarrow}\right) \qquad s_x = (s_0)_x + (v_0)_x t$$

$$d_A = 0 + 3090.96 \cos 45°(445.62)$$

$$= 973.96\left(10^3\right) \text{ m} = 974 \text{ km} \qquad \textbf{Ans.}$$

© 2010 Pearson Education, Inc., Upper Saddle River, NJ. All rights reserved. This material is protected under all copyright laws as they currently exist. No portion of this material may be reproduced, in any form or by any means, without permission in writing from the publisher.

•15–41. A 4-kg projectile travels with a horizontal velocity of 600 m/s before it explodes and breaks into two fragments A and B of mass 1.5 kg and 2.5 kg, respectively. If the fragments travel along the parabolic trajectories shown, determine the magnitude of velocity of each fragment just after the explosion and the horizontal distance d_B where segment B strikes the ground at D.

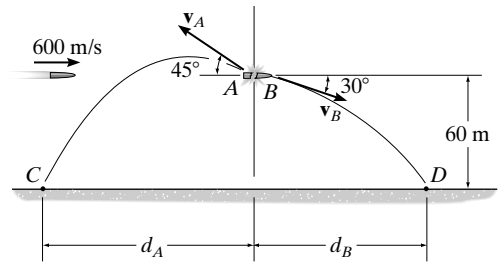

Conservation of Linear Momentum: By referring to the free-body diagram of the projectile just after the explosion shown in Fig. a, we notice that the pair of impulsive forces $\mathbf{F}$ generated during the explosion cancel each other since they are internal to the system. Here, $\mathbf{W}_A$ and $\mathbf{W}_B$ are non-impulsive forces. Since the resultant impulsive force along the x and y axes is zero, the linear momentum of the system is conserved along these two axes.

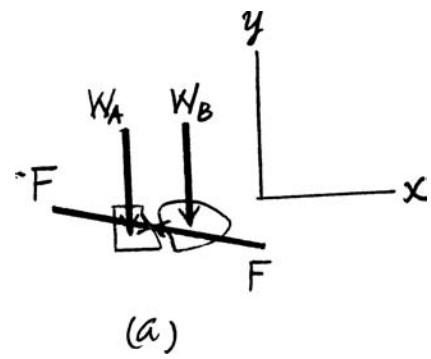

$$\left(\overset{+}{\rightarrow}\right) \qquad mv_x = m_A(v_A)_x + m_B(v_B)_x$$

$$4(600) = -1.5v_A \cos 45° + 2.5v_B \cos 30°$$

$$2.165v_B - 1.061v_A = 2400 \qquad \textbf{(1)}$$

$$(+\uparrow) \qquad mv_y = m_A(v_A)_y + m_B(v_B)_y$$

$$0 = 1.5v_A \sin 45° - 2.5v_B \sin 30°$$

$$v_B = 0.8485v_A \qquad \textbf{(2)}$$

Solving Eqs. (1) and (2) yields

$$v_A = 3090.96 \text{ m/s} = 3.09(10^3) \text{ m/s} \qquad \textbf{Ans.}$$

$$v_B = 2622.77 \text{ m/s} = 2.62(10^3) \text{ m/s} \qquad \textbf{Ans.}$$

By considering the x and y motion of segment B,

$$(+\uparrow) \qquad s_y = (s_0)_y + (v_0)_y t + \frac{1}{2}a_y t^2$$

$$-60 = 0 - 2622.77 \sin 30° \, t_{BD} + \frac{1}{2}(-9.81)t_{BD}{}^2$$

$$4.905t_{BD}{}^2 + 1311.38t_{BD} - 60 = 0$$

Solving for the positive root of the above equation,

$$t_{BD} = 0.04574 \text{ s}$$

and

$$\left(\overset{+}{\rightarrow}\right) \qquad s_x = (s_0)_x + (v_0)_x t$$

$$d_B = 0 + 2622.77 \cos 30°(0.04574)$$

$$= 103.91 \text{ m} = 104 \text{ m} \qquad \textbf{Ans.}$$

© 2010 Pearson Education, Inc., Upper Saddle River, NJ. All rights reserved. This material is protected under all copyright laws as they currently exist. No portion of this material may be reproduced, in any form or by any means, without permission in writing from the publisher.

15–42. The 75-kg boy leaps off cart A with a horizontal velocity of $v' = 3$ m/s measured relative to the cart. Determine the velocity of cart A just after the jump. If he then lands on cart B with the same velocity that he left cart A, determine the velocity of cart B just after he lands on it. Carts A and B have the same mass of 50 kg and are originally at rest.

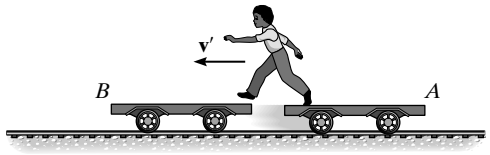

Free-Body Diagram: The free-body diagram of the man and cart system when the man leaps off and lands on the cart are shown in Figs. *a* and *b,* respectively. The pair of impulsive forces $\mathbf{F}_1$ and $\mathbf{F}_2$ generated during the leap and landing are internal to the system and thus cancel each other.

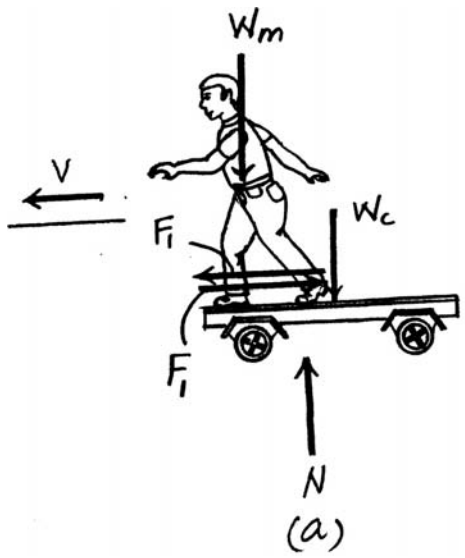

Kinematics: Applying the relative velocity equation, the relation between the velocity of the man and cart A just after leaping can be determined.

$$\mathbf{v}_m = \mathbf{v}_A + \mathbf{v}_{m/A}$$

$$\left(\overset{+}{\leftarrow}\right) \qquad (v_m)_2 = (v_A)_2 + 3 \qquad \textbf{(1)}$$

Conservation of Linear Momentum: Since the resultant of the impulse forces along the x axis is zero, the linear momentum of the system is conserved along the x axis for both cases. When the man leaps off cart A,

$$\left(\overset{+}{\leftarrow}\right) \qquad m_m(v_m)_1 + m_A(v_A)_1 = m_m(v_m)_2 + m_A(v_A)_2$$

$$0 + 0 = 75(v_m)_2 + 50(v_A)_2$$

$$(v_m)_2 = -0.6667(v_A)_2$$

Solving Eqs. (1) and (2) yields

$$(v_A)_2 = -1.80 \text{ m/s} = 1.80 \text{ m/s} \rightarrow$$

$$(v_m)_2 = 1.20 \text{ m/s} \leftarrow$$

Using the result of $(v_m)_2$ and considering the man's landing on cart B,

$$\left(\overset{+}{\leftarrow}\right) \qquad m_m(v_m)_2 + m_B(v_B)_1 = (m_m + m_B)v$$

$$75(1.20) + 0 = (75 + 50)v$$

$$v = 0.720 \text{ m/s} \leftarrow \qquad \textbf{Ans.}$$

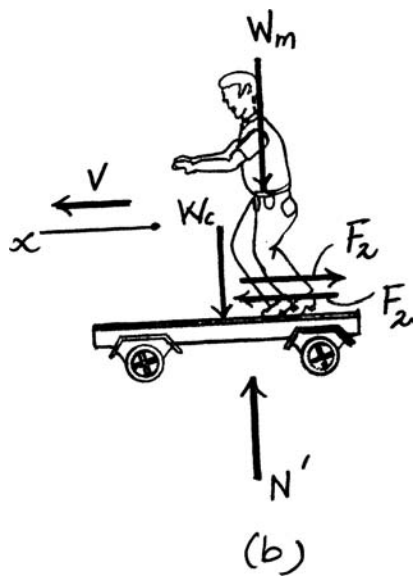

© 2010 Pearson Education, Inc., Upper Saddle River, NJ. All rights reserved. This material is protected under all copyright laws as they currently exist. No portion of this material may be reproduced, in any form or by any means, without permission in writing from the publisher.

15–43. Block A has a mass of 2 kg and slides into an open ended box B with a velocity of 2 m/s. If the box B has a mass of 3 kg and rests on top of a plate P that has a mass of 3 kg, determine the distance the plate moves after it stops sliding on the floor. Also, how long is it after impact before all motion ceases? The coefficient of kinetic friction between the box and the plate is $\mu_k = 0.2$, and between the plate and the floor $\mu'_k = 0.4$. Also, the coefficient of static friction between the plate and the floor is $\mu'_s = 0.5$.

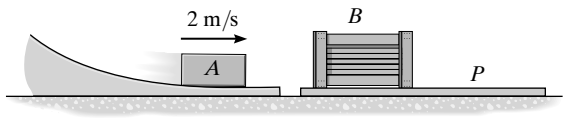

Equations of Equilibrium: From FBD(a).

$$+\uparrow \Sigma F_y = 0; \qquad N_B - (3 + 2)(9.81) = 0 \qquad N_B = 49.05 \text{ N}$$

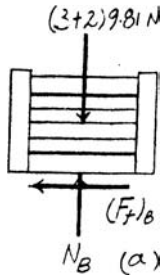

When box B slides on top of plate P, $(F_f)_B = \mu_k N_B = 0.2(49.05) = 9.81$ N. From FBD(b).

$$+\uparrow \Sigma F_y = 0; \qquad N_P - 49.05 - 3(9.81) = 0 \qquad N_P = 78.48 \text{ N}$$

$$\overset{+}{\rightarrow} \Sigma F_x = 0; \qquad 9.81 - (F_f)_P = 0 \qquad (F_f)_P = 9.81 \text{ N}$$

Since $(F_f)_P < \left[(F_f)_P\right]_{\max} = \mu_s' N_P = 0.5(78.48) = 39.24$ N, plate P does not move. Thus

$$s_P = 0 \qquad \textbf{Ans.}$$

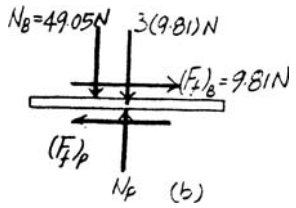

Conservation of Linear Momentum: If we consider the block and the box as a system, then the impulsive force caused by the impact is *internal* to the system. Therefore, it will cancel out. As the result, linear momentum is conserved along the x axis.

$$m_A (v_A)_1 + m_R (v_R)_1 = (m_A + m_R) v_2$$

$$(\overset{+}{\rightarrow}) \qquad 2(2) + 0 = (2 + 3) v_2$$

$$v_2 = 0.800 \text{ m/s} \rightarrow$$

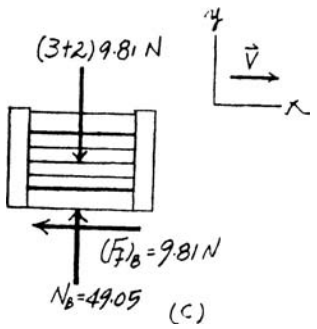

Principle of Linear Impulse and Momentum: Applying Eq. 15–4, we have

$$m(v_x)_1 + \Sigma \int_{t_1}^{t_2} F_x \, dt = m(v_x)_2$$

$$(\overset{+}{\rightarrow}) \qquad 5(0.8) + \left[-9.81(t)\right] = 5(0)$$

$$t = 0.408 \text{ s} \qquad \textbf{Ans.}$$

© 2010 Pearson Education, Inc., Upper Saddle River, NJ. All rights reserved. This material is protected under all copyright laws as they currently exist. No portion of this material may be reproduced, in any form or by any means, without permission in writing from the publisher.

***15–44.** Block A has a mass of 2 kg and slides into an open ended box B with a velocity of 2 m/s. If the box B has a mass of 3 kg and rests on top of a plate P that has a mass of 3 kg, determine the distance the plate moves after it stops sliding on the floor. Also, how long is it after impact before all motion ceases? The coefficient of kinetic friction between the box and the plate is $\mu_k = 0.2$, and between the plate and the floor $\mu'_k = 0.1$. Also, the coefficient of static friction between the plate and the floor is $\mu'_s = 0.12$.

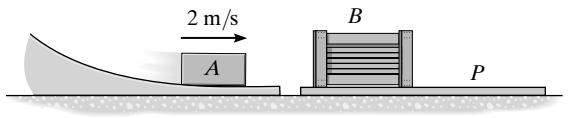

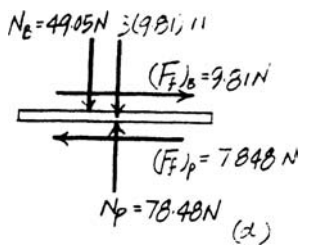

Equations of Equilibrium: From FBD(a),

$$+\uparrow \Sigma F_x = 0; \qquad N_B - (3 + 2)(9.81) = 0 \qquad N_B = 49.05 \text{ N}$$

When box B slides on top of plate P. $(F_f)_B = \mu_k N_B = 0.2(49.05) = 9.81$ N. From FBD(b).

$$+\uparrow \Sigma F_y = 0; \qquad N_P - 49.05 - 3(9.81) = 0 \qquad N_P = 78.48 \text{ N}$$

$$\overset{+}{\rightarrow} \Sigma F_x = 0; \qquad 9.81 - (F_f)_P = 0 \qquad (F_f)_P = 9.81 \text{ N}$$

Since $(F_f)_P > \left[(F_f)_P\right]_{\max} = \mu_s' N_P = 0.12(78.48) = 9.418$N, plate P slides. Thus, $(F_f)_P = \mu_k' N_P = 0.1(78.48) = 7.848$ N.

Conservation of Linear Momentum: If we consider the block and the box as a system, then the impulsive force caused by the impact is *internal* to the system. Therefore, it will cancel out. As the result, linear momentum is conserved along x axis.

$$m_A (v_A)_1 + m_R (v_R)_1 = (m_A + m_R) v_2$$

$$\left(\overset{+}{\rightarrow}\right) \qquad 2(2) + 0 = (2 + 3) v_2$$

$$v_2 = 0.800 \text{ m/s} \rightarrow$$

Principle of Linear Impulse and Momentum: In order for box B to stop sliding on plate P, both box B and plate P must have same speed v_3. Applying Eq. 15–4 to box B (FBD(c)], we have

$$m(v_x)_1 + \Sigma \int_{t_1}^{t_2} F_x \, dt = m(v_x)_2$$

$$\left(\overset{+}{\rightarrow}\right) \qquad 5(0.8) + \left[-9.81(t_1)\right] = 5v_3 \qquad \textbf{[1]}$$

Applying Eq. 15–4 to plate P[FBD(d)], we have

$$m(v_x)_1 + \Sigma \int_{t_1}^{t_2} F_x \, dt = m(v_x)_2$$

$$\left(\overset{+}{\rightarrow}\right) \qquad 3(0) + 9.81(t_1) - 7.848(t_1) = 3v_3 \qquad \textbf{[2]}$$

Solving Eqs. [1] and [2] yields

$$t_1 = 0.3058 \text{ s} \qquad v_3 = 0.200 \text{ m/s}$$

Equation of Motion: From FBD(d), the acceleration of plate P when box B still slides on top of it is given by

$$\overset{+}{\rightarrow} \Sigma Fx = ma_x; \qquad 9.81 - 7.848 = 3(a_P)_1 \qquad (a_P)_1 = 0.654 \text{ m/s}^2$$

© 2010 Pearson Education, Inc., Upper Saddle River, NJ. All rights reserved. This material is protected under all copyright laws as they currently exist. No portion of this material may be reproduced, in any form or by any means, without permission in writing from the publisher.

***15–44. Continued**

When box B stop slid ling on top of box B, $(F_f)_B = 0$. From this instant onward plate P and box B act as a unit and slide together. From FBD(d), the acceleration of plate P and box B is given by

$$\overset{+}{\rightarrow} \Sigma Fx = ma_x; \qquad -7.848 = 8(a_P)_2 \qquad (a_P)_2 = -0.981 \text{ m/s}^2$$

Kinematics: Plate P travels a distance s_1 before box B stop sliding.

$$\left(\overset{+}{\rightarrow}\right) \qquad s_1 = (v_0)_P t_1 + \frac{1}{2}(a_P)_1 t_1^2$$

$$= 0 + \frac{1}{2}(0.654)\left(0.3058^2\right) = 0.03058 \text{ m}$$

The time t_2 for plate P to stop after box B stop slidding is given by

$$\left(\overset{+}{\rightarrow}\right) \qquad v_4 = v_3 + (a_P)_2 t_2$$

$$0 = 0.200 + (-0.981)t_2 \qquad t_2 = 0.2039 \text{ s}$$

The distance s_2 traveled by plate P after box B stop sliding is given by

$$\left(\overset{+}{\rightarrow}\right) \qquad v_4^2 = v_3^2 + 2(a_P)_2 s_2$$

$$0 = 0.200^2 + 2(-0.981)s_2 \qquad s_2 = 0.02039 \text{ m}$$

The total distance travel by plate P is

$$s_P = s_1 + s_2 = 0.03058 + 0.02039 = 0.05097 \text{ m} = 51.0 \text{ mm} \qquad \textbf{Ans.}$$

The total time taken to cease all the motion is

$$t_{\text{Tot}} = t_1 + t_2 = 0.3058 + 0.2039 = 0.510 \text{ s} \qquad \textbf{Ans.}$$

© 2010 Pearson Education, Inc., Upper Saddle River, NJ. All rights reserved. This material is protected under all copyright laws as they currently exist. No portion of this material may be reproduced, in any form or by any means, without permission in writing from the publisher.

•15–45. The 20-kg block A is towed up the ramp of the 40-kg cart using the motor M mounted on the side of the cart. If the motor winds in the cable with a constant velocity of 5 m/s, measured relative to the cart, determine how far the cart will move when the block has traveled a distance $s = 2$ m up the ramp. Both the block and cart are at rest when $s = 0$. The coefficient of kinetic friction between the block and the ramp is $\mu_k = 0.2$. Neglect rolling resistance.

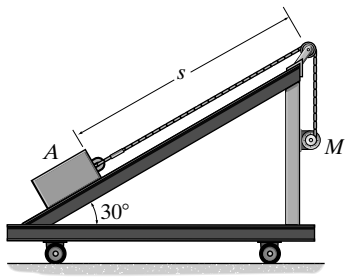

Conservation of Linear Momentum: The linear momentum of the block and cart system is conserved along the x axis since no impulsive forces act along the x axis.

$$(\overset{+}{\rightarrow}) \qquad m_B\left[(v_B)_x\right]_1 + m_C(v_C)_1 = m_B\left[(v_B)_x\right]_2 + m_C(v_C)_2$$

$$0 + 0 = 20(v_B)_x + 40v_C \qquad \textbf{(1)}$$

Kinematics: Here, the velocity of the block relative to the cart is directed up the ramp with a magnitude of $v_{B/C} = 5$ m/s. Applying the relative velocity equation and considering the motion of the block.

$$\mathbf{v}_B = \mathbf{v}_C + \mathbf{v}_{B/C}$$

$$\begin{bmatrix} v_B \\ \\ \end{bmatrix} = \begin{bmatrix} v_C \\ \rightarrow \end{bmatrix} + \begin{bmatrix} 5 \\ \\ \end{bmatrix}$$

$$(\overset{+}{\rightarrow}) \qquad (v_B)_x = v_C + 5\cos 30^\circ \qquad \textbf{(2)}$$

Solving Eqs. (1) and (2) yields

$v_C = -1.443$ m/s $= 1.443$ m/s $\leftarrow$ $\qquad (v_B)_x = 2.887$ m/s

The time required for the block to travel up the ramp a relative distance of $s_{B/C} = 2$ m is

$$(\ ) \qquad s_{B/C} = (s_{B/C})_0 + (v_{B/C})t$$

$$2 = 0 + 5t$$

$$t = 0.4 \text{ s}$$

Thus, the distance traveled by the cart during time t is

$$(\overset{+}{\leftarrow}) \qquad s_C = v_C t = 1.443(0.4) = 0.577 \text{ m} \leftarrow \qquad \textbf{Ans.}$$

© 2010 Pearson Education, Inc., Upper Saddle River, NJ. All rights reserved. This material is protected under all copyright laws as they currently exist. No portion of this material may be reproduced, in any form or by any means, without permission in writing from the publisher.

15–46. If the 150-lb man fires the 0.2-lb bullet with a horizontal muzzle velocity of 3000 ft/s, measured relative to the 600-lb cart, determine the velocity of the cart just after firing. What is the velocity of the cart when the bullet becomes embedded in the target? During the firing, the man remains at the same position on the cart. Neglect rolling resistance of the cart.

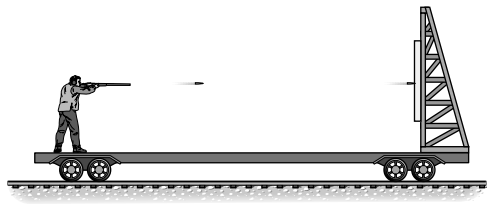

Free-Body Diagram: The free-body diagram of the bullet, man, and cart just after firing and at the instant the bullet hits the target are shown in Figs., *a* and *b*, respectively. The pairs of impulsive forces $\mathbf{F}_1$ and $\mathbf{F}_2$ generated during the firing and impact are internal to the system and thus cancel each other.

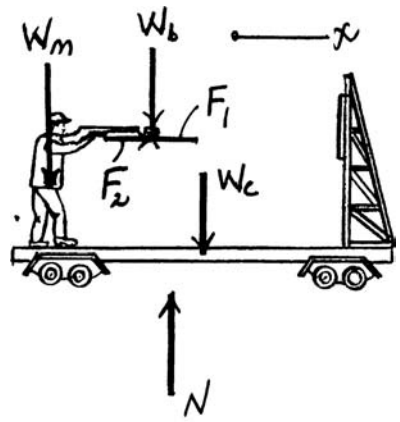

(a)

Kinematics: Applying the relative velocity equation, the relation between the velocity of the bullet and the cart just after firing can be determined

$$(\overset{+}{\rightarrow}) \qquad \mathbf{v}_b = \mathbf{v}_c + \mathbf{v}_{b/c}$$

$$(v_b)_2 = (v_c)_2 + 3000 \qquad \textbf{(1)}$$

Conservation of Linear Momentum: Since the pair of resultant impulsive forces $\mathbf{F}_1$ and $\mathbf{F}_2$ generated during the firing and impact is zero along the x axis, the linear momentum of the system for both cases are conserved along the. x axis. For the case when the bullet is fired, momentum is conserved along the x' axis.

$$(\overset{+}{\rightarrow}) \qquad m_b(v_b)_1 + m_c(v_c)_1 = m_b(v_b)_2 + m_c(v_c)_2$$

$$0 + 0 = \left(\frac{0.2}{32.2}\right)(v_b)_2 + \left(\frac{150 + 600}{32.2}\right)(v_c)_2$$

$$(v_b)_2 = -3750(v_c)_2 \qquad \textbf{(2)}$$

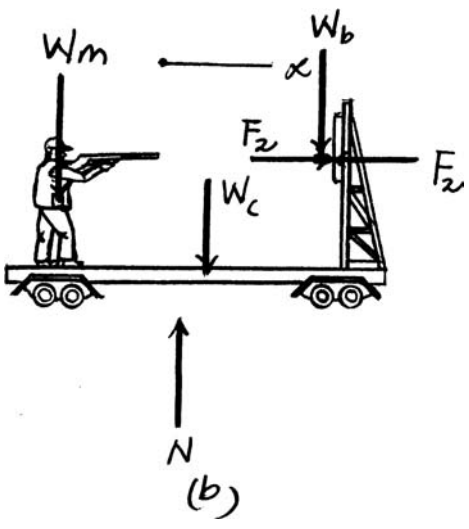

(b)

Solving Eqs. (1) and (2) yields

$$(v_c)_2 = -0.7998 \text{ ft/s} = 0.800 \text{ ft/s} \leftarrow \qquad \textbf{Ans.}$$

$$(v_b)_2 = 2999.20 \text{ ft/s} \rightarrow$$

Using the results of $(v_c)_2$ and $(v_b)_2$ and considering the case when the bullet hits the target,

$$(\overset{+}{\rightarrow}) \qquad m_b(v_b)_2 + m_c(v_c)_2 = (m_b + m_c)v_3$$

$$\frac{0.2}{32.2}(2999.20) + \left[-\left(\frac{150 + 600}{32.2}\right)(0.7998)\right] = \left(\frac{150 + 600 + 0.2}{32.2}\right)v_3$$

$$v_3 = 0 \qquad \textbf{Ans.}$$

© 2010 Pearson Education, Inc., Upper Saddle River, NJ. All rights reserved. This material is protected under all copyright laws as they currently exist. No portion of this material may be reproduced, in any form or by any means, without permission in writing from the publisher.

15–47. The free-rolling ramp has a weight of 120 lb. The crate whose weight is 80 lb slides from rest at A, 15 ft down the ramp to B. Determine the ramp's speed when the crate reaches B. Assume that the ramp is smooth, and neglect the mass of the wheels.

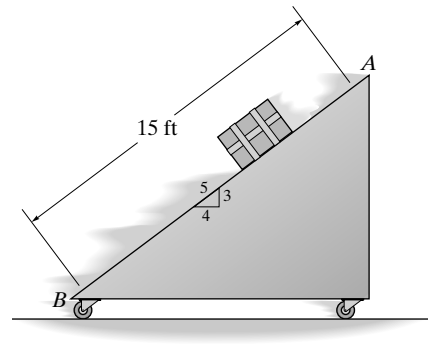

$$T_1 + V_1 = T_2 + V_2$$

$$0 + 80\left(\frac{3}{5}\right)(15) = \frac{1}{2}\left(\frac{80}{32.2}\right)v_B^2 + \frac{1}{2}\left(\frac{120}{32.2}\right)v_r^2 \qquad \textbf{(1)}$$

$$(\overset{+}{\rightarrow})\Sigma\, m\, v_1 = \Sigma\, m\, v_2$$

$$0 + 0 = \frac{120}{32.2}v_r - \frac{80}{32.2}(v_B)_x$$

$$(v_B)_x = 1.5v_r$$

$$\mathbf{v}_B = \mathbf{v}_r + \mathbf{v}_{B/r}$$

$$\left(\overset{+}{\rightarrow}\right) - (v_B)_x = vr - \frac{4}{5}v_{B/r} \qquad \textbf{(2)}$$

$$\left(+\uparrow\right)(-v_B)_y = 0 - \frac{3}{5}v_{B/r} \qquad \textbf{(3)}$$

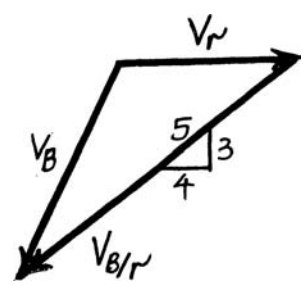

Eliminating $(v_B)_{/r}$, from Eqs. (2) and (3) and substituting $(v_B)_y = 1.875\, v_r$, results in

$$v_B^2 = (v_B)_x^2 + (v_B)_y^2 = (1.5v_r)^2 + (1.875v_r)^2 = 5.7656v_r^2 \qquad \textbf{(4)}$$

Substituting Eq. (4) into (1) yields:

$$80\left(\frac{3}{5}\right)(15) = \frac{1}{2}\left(\frac{80}{32.2}\right)\left(5.7656v_r^2\right) + \frac{1}{2}\left(\frac{120}{32.2}\right)v_r^2$$

$$v_r = 8.93 \text{ ft/s} \qquad \textbf{Ans.}$$

© 2010 Pearson Education, Inc., Upper Saddle River, NJ. All rights reserved. This material is protected under all copyright laws as they currently exist. No portion of this material may be reproduced, in any form or by any means, without permission in writing from the publisher.

***15–48.** The free-rolling ramp has a weight of 120 lb. If the 80-lb crate is released from rest at A, determine the distance the ramp moves when the crate slides 15 ft down the ramp to the bottom B.

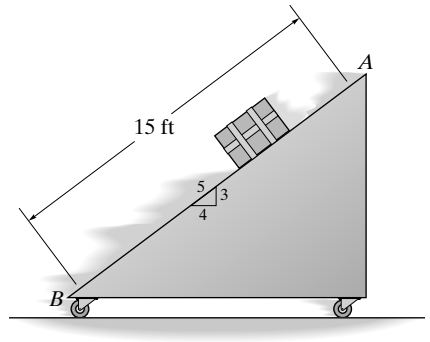

$(\overset{+}{\rightarrow})$ $\quad \Sigma m v_1 = \Sigma m v_2$

$$0 = \frac{120}{32.2} v_r - \frac{80}{32.2} (v_B)_x$$

$$(v_B)_x = 1.5\, v_r$$

$$\mathbf{v}_B = \mathbf{v}_r + \mathbf{v}_{B/r}$$

$$-(v_B)_x = v_r - (v_{B/r})_x \left(\frac{4}{5}\right)$$

$$-1.5 v_r = v_r - (v_{B/r})_x \left(\frac{4}{5}\right)$$

$$2.5\, v_r = (v_{B/r})_x \left(\frac{4}{5}\right)$$

Integrate

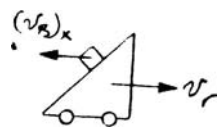

$$2.5\, s_r = (s_{B/r})_x \left(\frac{4}{5}\right)$$

$$2.5\, s_r = \left(\frac{4}{5}\right)(15)$$

$s_r = 4.8$ ft **Ans.**

© 2010 Pearson Education, Inc., Upper Saddle River, NJ. All rights reserved. This material is protected under all copyright laws as they currently exist. No portion of this material may be reproduced, in any form or by any means, without permission in writing from the publisher.

•15–49. The 5-kg spring-loaded gun rests on the smooth surface. It fires a ball having a mass of 1 kg with a velocity of $v' = 6$ m/s relative to the gun in the direction shown. If the gun is originally at rest, determine the horizontal distance d the ball is from the initial position of the gun at the instant the ball strikes the ground at D. Neglect the size of the gun.

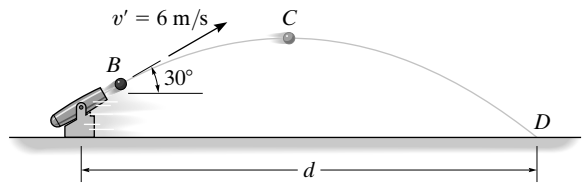

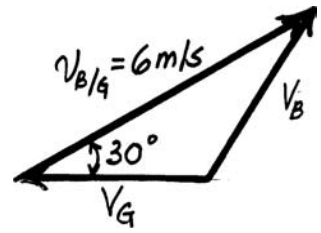

$(\overset{+}{\rightarrow})$ $\quad \Sigma mv_1 = \Sigma mv_2$

$$0 = 1(v_B)_x - 5v_G$$

$$(v_B)_x = 5v_G$$

$(\overset{+}{\rightarrow})$ $\quad v_B = v_G + v_{B/G}$

$$5v_G = -v_G + 6\cos 30°$$

$$v_G = 0.8660 \text{ m/s} \leftarrow$$

So that,

$(v_B)_x = 4.330 \text{ m/s} \rightarrow$

$(v_B)_y = 4.330 \tan 30° = 2.5 \text{ m/s} \uparrow$

Time of flight for the ball:

$(+\uparrow)$ $\quad v = v_0 + a_c t$

$$-2.5 = 2.5 - 9.81t$$

$$t = 0.5097 \text{ s}$$

Distance ball travels:

$(\overset{+}{\rightarrow})$ $\quad s = v_0 t$

$$s = 4.330(0.5097) = 2.207 \text{ m} \rightarrow$$

Distance gun travels:

$(\overset{+}{\leftarrow})$ $\quad s = v_0 t$

$$s' = 0.8660(0.5097) = 0.4414 \text{ m} \leftarrow$$

Thus,

$d = 2.207 + 0.4414 = 2.65$ m **Ans.**

© 2010 Pearson Education, Inc., Upper Saddle River, NJ. All rights reserved. This material is protected under all copyright laws as they currently exist. No portion of this material may be reproduced, in any form or by any means, without permission in writing from the publisher.

15–50. The 5-kg spring-loaded gun rests on the smooth surface. It fires a ball having a mass of 1 kg with a velocity of $v' = 6$ m/s relative to the gun in the direction shown. If the gun is originally at rest, determine the distance the ball is from the initial position of the gun at the instant the ball reaches its highest elevation C. Neglect the size of the gun.

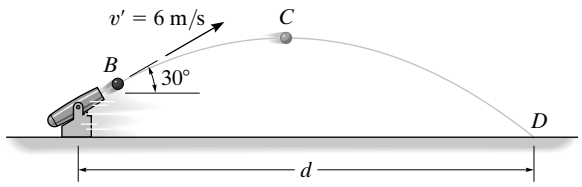

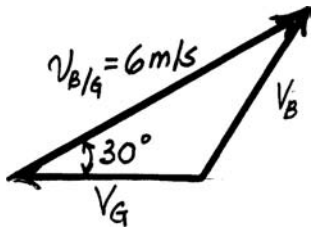

$(\overset{+}{\rightarrow})$ $\quad \Sigma mv_1 = \Sigma mv_2$

$$0 = 1(v_B)_x - 5v_G$$

$$(v_B)_x = 5v_G$$

$(\overset{+}{\rightarrow})$ $\quad v_B = v_G + v_{B/G}$

$$5v_G = -v_G + 6\cos 30°$$

$$v_G = 0.8660 \text{ m/s} \leftarrow$$

So that,

$$(v_B)_x = 4.330 \text{ m/s} \rightarrow$$

$$(v_B)_y = 4.330 \tan 30° = 2.5 \text{ m/s} \uparrow$$

Time of flight for the ball:

$(+\uparrow)$ $\quad v = v_0 + a_c t$

$$0 = 2.5 - 9.81t$$

$$t = 0.2548 \text{ s}$$

Height of ball:

$(+\uparrow)$ $\quad v^2 = v_0^2 + 2a_c(s - s_0)$

$$0 = (2.5)^2 - 2(9.81)(h - 0)$$

$$h = 0.3186 \text{ m}$$

Distance ball travels:

$(\overset{+}{\rightarrow})$ $\quad s = v_0 t$

$$s = 4.330(0.2548) = 1.103 \text{ m} \rightarrow$$

Distance gun travels:

$(\overset{+}{\leftarrow})$ $\quad s = v_0 t$

$$s' = 0.8660(0.2548) = 0.2207 \text{ m} \leftarrow$$

$$1.103 + 0.2207 = 1.324 \text{ m}$$

Distance from cannon to ball:

$$\sqrt{(0.4587)^2 + (1.324)^2} = 1.36 \text{ m}$$ **Ans.**

© 2010 Pearson Education, Inc., Upper Saddle River, NJ. All rights reserved. This material is protected under all copyright laws as they currently exist. No portion of this material may be reproduced, in any form or by any means, without permission in writing from the publisher.

15–51. A man wearing ice skates throws an 8-kg block with an initial velocity of 2 m/s, measured relative to himself, in the direction shown. If he is originally at rest and completes the throw in 1.5 s while keeping his legs rigid, determine the horizontal velocity of the man just after releasing the block. What is the vertical reaction of both his skates on the ice during the throw? The man has a mass of 70 kg. Neglect friction and the motion of his arms.

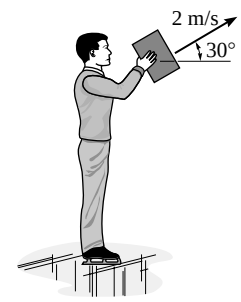

$\left(\overset{+}{\rightarrow}\right) \qquad 0 = -m_M v_M + m_B (v_B)_x$ **(1)**

However, $\mathbf{v}_B = \mathbf{v}_M + \mathbf{v}_{B/M}$

$\left(\overset{+}{\rightarrow}\right) \qquad (v_B)_x = -v_M + 2\cos 30°$ **(2)**

$(+\uparrow) \qquad (v_B)_y = 0 + 2\sin 30° = 1 \text{ m/s}$

Substituting Eq. (2) into (1) yields:

$0 = -m_M v_M + m_B(-v_M + 2\cos 30°)$

$$v_M = \frac{2m_B \cos 30°}{m_B + m_M} = \frac{2(8)\cos 30°}{8 + 70} = 0.178\text{m/s}$$ **Ans.**

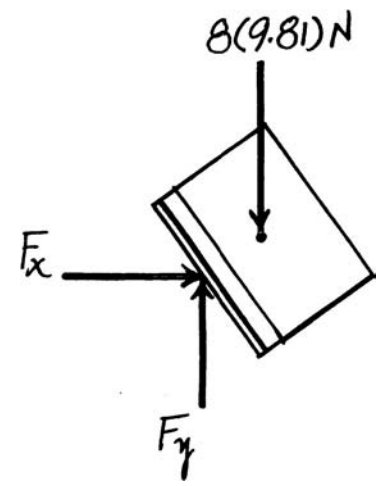

For the block:

$(+\uparrow) \qquad m(v_y)_1 + \Sigma \int_{t_1}^{t_2} F_y\, dt = m(v_y)_2$

$0 + F_y(1.5) - 8(9.81)(1.5) = 8(2\sin 30°) \qquad F_y = 83.81 \text{ N}$

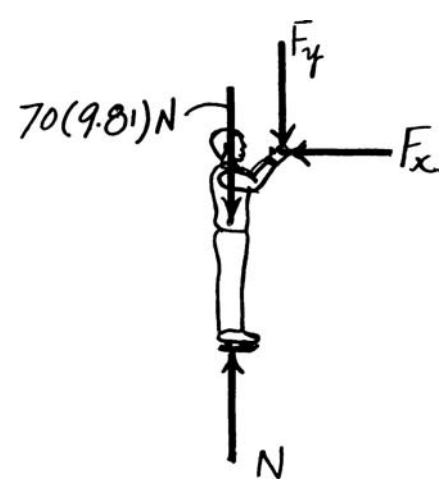

For the man:

$(+\uparrow) \qquad m(v_y)_1 + \Sigma \int_{t_1}^{t_2} F_y\, dt = m(v_y)_2$

$0 + N(1.5) - 70(9.81)(1.5) - 83.81(1.5) = 0$

$N = 771 \text{ N}$ **Ans.**

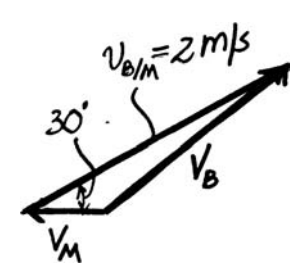

© 2010 Pearson Education, Inc., Upper Saddle River, NJ. All rights reserved. This material is protected under all copyright laws as they currently exist. No portion of this material may be reproduced, in any form or by any means, without permission in writing from the publisher.

***15–52.** The block of mass m travels at v_1 in the direction θ_1 shown at the top of the smooth slope. Determine its speed v_2 and its direction θ_2 when it reaches the bottom.

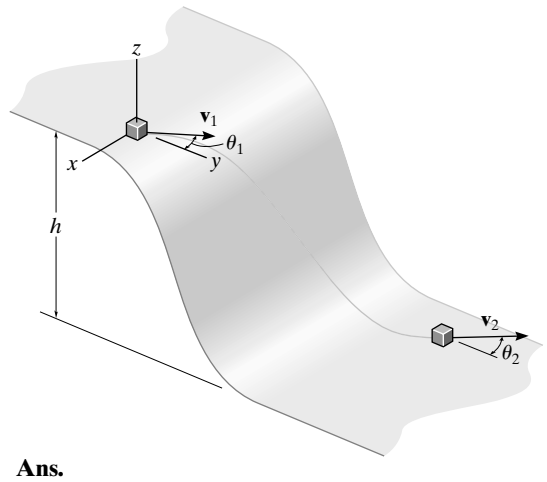

There are no impulses in the : direction:

$$mv_1 \sin\theta_1 = mv_2 \sin\theta_2$$

$$T_1 + V_1 = T_2 + V_2$$

$$\frac{1}{2}mv_1^2 + mgh = \frac{1}{2}mv_2^2 + 0$$

$$v_2 = \sqrt{v_1^2 + 2gh}$$ **Ans.**

$$\sin\theta_2 = \frac{v_t \sin\theta_1}{\sqrt{v_1^2 + 2gh}}$$

$$\theta_2 = \sin^{-1}\left(\frac{v_1 \sin\theta_1}{\sqrt{v_1^2 + 2gh}}\right)$$ **Ans.**

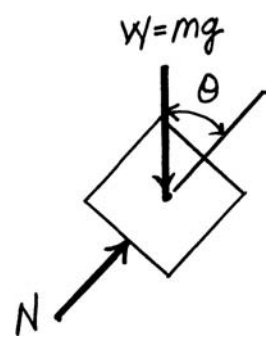

•15–53. The 20-lb cart B is supported on rollers of negligible size. If a 10-lb suitcase A is thrown horizontally onto the cart at 10 ft/s when it is at rest, determine the length of time that A slides relative to B, and the final velocity of A and B. The coefficient of kinetic friction between A and B is $\mu_k = 0.4$.

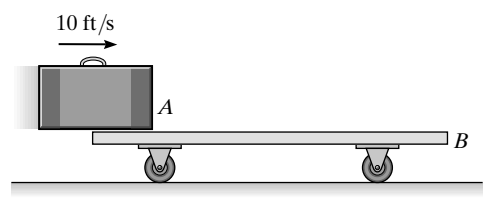

System

$$\left(\overset{+}{\rightarrow}\right) \qquad \Sigma m_1 v_1 = \Sigma m_2 v_2$$

$$\left(\frac{10}{32.2}\right)(10) + 0 = \left(\frac{10 + 20}{32.2}\right)v$$

$$v = 3.33 \text{ ft/s}$$ **Ans.**

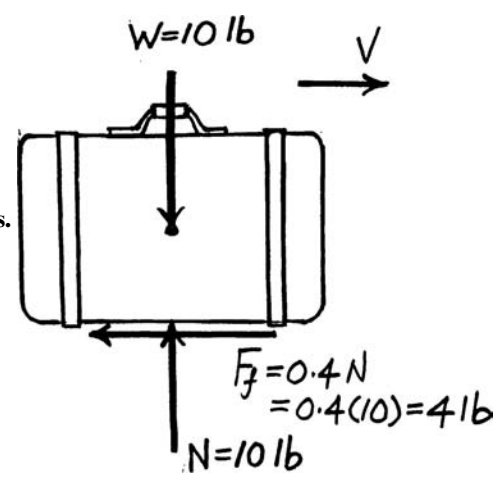

For A:

$$m\,v_1 + \Sigma \int F\,dt = m\,v_2$$

$$\left(\frac{10}{32.2}\right)(10) - 4t = \left(\frac{10}{32.2}\right)(3.33)$$

$$t = 0.5176 = 0.518 \text{ s}$$ **Ans.**

© 2010 Pearson Education, Inc., Upper Saddle River, NJ. All rights reserved. This material is protected under all copyright laws as they currently exist. No portion of this material may be reproduced, in any form or by any means, without permission in writing from the publisher.

15–54. The 20-lb cart B is supported on rollers of negligible size. If a 10-lb suitcase A is thrown horizontally onto the cart at 10 ft/s when it is at rest, determine the time t and the distance B moves at the instant A stops relative to B. The coefficient of kinetic friction between A and B is $\mu_k = 0.4$.

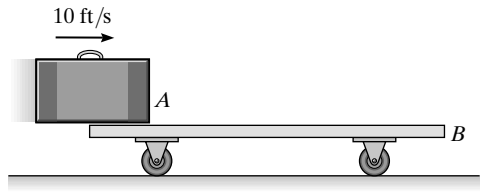

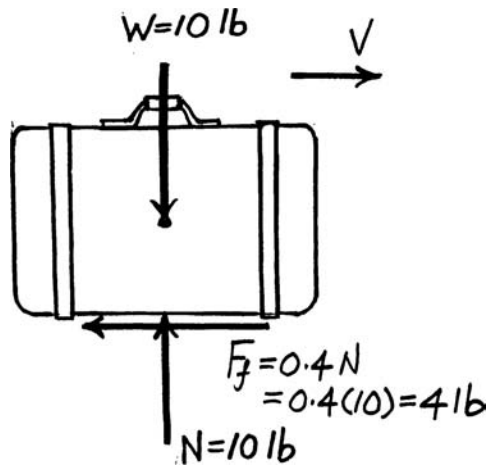

System:

$$\left(\overset{+}{\rightarrow}\right) \qquad \Sigma m_1 v_1 = \Sigma m_2 v_2$$

$$\left(\frac{10}{32.2}\right)(10) + 0 = \left(\frac{10 + 20}{32.2}\right)v$$

$$v = 3.33 \text{ ft/s}$$

For A:

$$m v_1 + \Sigma \int F\, dt = m v_2$$

$$\left(\frac{10}{32.2}\right)(10) - 4t = \left(\frac{10}{32.2}\right)(3.33)$$

$$t = 0.5176 = 0.518 \text{ s} \qquad \textbf{Ans.}$$

For B:

$$\left(\overset{+}{\rightarrow}\right) \qquad v = v_0 + a_c t$$

$$3.33 = 0 + a_c\,(0.5176)$$

$$a_c = 6.440 \text{ ft/s}^2$$

$$\left(\overset{+}{\rightarrow}\right) \qquad s = s_0 + v_0 t + \frac{1}{2} a_c t^2$$

$$s = 0 + 0 + \frac{1}{2}(6.440)(0.5176)^2 = 0.863 \text{ ft} \qquad \textbf{Ans.}$$

© 2010 Pearson Education, Inc., Upper Saddle River, NJ. All rights reserved. This material is protected under all copyright laws as they currently exist. No portion of this material may be reproduced, in any form or by any means, without permission in writing from the publisher.

15–55. A 1-lb ball A is traveling horizontally at 20 ft/s when it strikes a 10-lb block B that is at rest. If the coefficient of restitution between A and B is $e = 0.6$, and the coefficient of kinetic friction between the plane and the block is $\mu_k = 0.4$, determine the time for the block B to stop sliding.

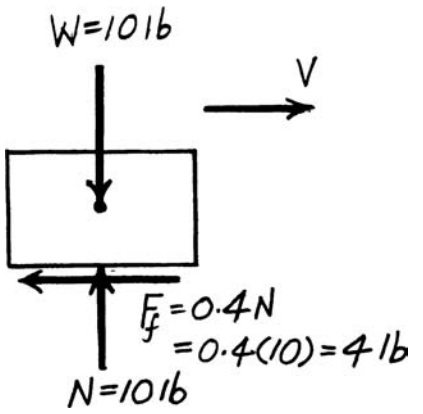

$$\left(\overset{+}{\rightarrow}\right) \qquad \Sigma m_1 v_1 = \Sigma m_2 v_2$$

$$\left(\frac{1}{32.2}\right)(20) + 0 = \left(\frac{1}{32.2}\right)(v_A)_2 + \left(\frac{10}{32.2}\right)(v_B)_2$$

$$(v_A)_2 + 10(v_B)_2 = 20$$

$$\left(\overset{+}{\rightarrow}\right) \qquad e = \frac{(v_B)_2 - (v_A)_2}{(v_A)_1 - (v_B)_1}$$

$$0.6 = \frac{(v_B)_2 - (v_A)_2}{20 - 0}$$

$$(v_B)_2 - (v_A)_2 = 12$$

Thus,

$(v_B)_2 = 2.909 \text{ ft/s} \rightarrow$

$(v_A)_2 = -9.091 \text{ ft/s} = 9.091 \text{ ft/s} \leftarrow$

Block B:

$$\left(\overset{+}{\rightarrow}\right) \qquad m v_1 + \Sigma \int F\, dt = m v_2$$

$$\left(\frac{10}{32.2}\right)(2.909) - 4t = 0$$

$t = 0.226 \text{ s}$ **Ans.**

© 2010 Pearson Education, Inc., Upper Saddle River, NJ. All rights reserved. This material is protected under all copyright laws as they currently exist. No portion of this material may be reproduced, in any form or by any means, without permission in writing from the publisher.

***15–56.** A 1-lb ball A is traveling horizontally at 20 ft/s when it strikes a 10-lb block B that is at rest. If the coefficient of restitution between A and B is $e = 0.6$, and the coefficient of kinetic friction between the plane and the block is $\mu_k = 0.4$, determine the distance block B slides on the plane before it stops sliding.

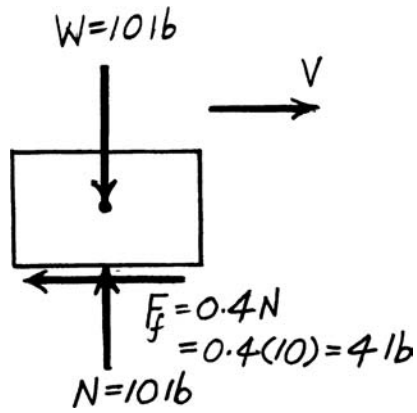

$$\left(\overset{+}{\rightarrow}\right) \qquad \Sigma m_1 v_1 = \Sigma m_2 v_2$$

$$\left(\frac{1}{32.2}\right)(20) + 0 = \left(\frac{1}{32.2}\right)(v_A)_2 + \left(\frac{10}{32.2}\right)(v_B)_2$$

$$(v_A)_2 + 10(v_B)_2 = 20$$

$$\left(\overset{+}{\rightarrow}\right) \qquad e = \frac{(v_B)_2 - (v_A)_2}{(v_A)_1 - (v_B)_1}$$

$$0.6 = \frac{(v_B)_2 - (v_A)_2}{20 - 0}$$

$$(v_B)_2 - (v_A)_2 = 12$$

Thus,

$(v_B)_2 = 2.909 \text{ ft/s} \rightarrow$

$(v_A)_2 = -9.091 \text{ ft/s} = 9.091 \text{ ft/s} \leftarrow$

Block B:

$$T_1 + \Sigma U_{1-2} = T_2$$

$$\frac{1}{2}\left(\frac{10}{32.2}\right)(2.909)^2 - 4d = 0$$

$d = 0.329$ ft **Ans.**

© 2010 Pearson Education, Inc., Upper Saddle River, NJ. All rights reserved. This material is protected under all copyright laws as they currently exist. No portion of this material may be reproduced, in any form or by any means, without permission in writing from the publisher.

•15–57. The three balls each have a mass m. If A has a speed v just before a direct collision with B, determine the speed of C after collision. The coefficient of restitution between each ball is e. Neglect the size of each ball.

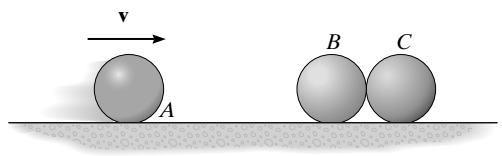

Conservation of Momentum: When ball A strikes ball B, we have

$$m_A(v_A)_1 + m_B(v_B)_1 = m_A(v_A)_2 + m_B(v_B)_2$$

$$(\overset{+}{\rightarrow}) \qquad mv + 0 = m(v_A)_2 + m(v_B)_2 \qquad \textbf{[1]}$$

Coefficient of Restitution:

$$e = \frac{(v_B)_2 - (v_A)_2}{(v_A)_1 - (v_B)_1}$$

$$(\overset{+}{\rightarrow}) \qquad e = \frac{(v_B)_2 - (v_A)_2}{v - 0} \qquad \textbf{[2]}$$

Solving Eqs. [1] and [2] yields

$$(v_A)_2 = \frac{v(1-e)}{2} \qquad (v_B)_2 = \frac{v(1+e)}{2}$$

Conservation of Momentum: When ball B strikes ball C, we have

$$m_B(v_B)_2 + m_C(v_C)_1 = m_B(v_B)_3 + m_C(v_C)_2$$

$$(\overset{+}{\rightarrow}) \qquad m\left[\frac{v(1+e)}{2}\right] + 0 = m(v_B)_3 + m(v_C)_2 \qquad \textbf{[3]}$$

Coefficient of Restitution:

$$e = \frac{(v_C)_2 - (v_B)_3}{(v_B)_2 - (v_C)_1}$$

$$(\overset{+}{\rightarrow}) \qquad e = \frac{(v_C)_2 - (v_B)_3}{\dfrac{v(1+e)}{2} - 0} \qquad \textbf{[4]}$$

Solving Eqs. [3] and [4] yields

$$(v_C)_2 = \frac{v(1+e)^2}{4} \qquad \textbf{Ans.}$$

$$(v_B)_3 = \frac{v(1-e^2)}{4}$$

© 2010 Pearson Education, Inc., Upper Saddle River, NJ. All rights reserved. This material is protected under all copyright laws as they currently exist. No portion of this material may be reproduced, in any form or by any means, without permission in writing from the publisher.

15–58. The 15-lb suitcase A is released from rest at C. After it slides down the smooth ramp, it strikes the 10-lb suitcase B, which is originally at rest. If the coefficient of restitution between the suitcases is $e = 0.3$ and the coefficient of kinetic friction between the floor DE and each suitcase is $\mu_k = 0.4$, determine (a) the velocity of A just before impact, (b) the velocities of A and B just after impact, and (c) the distance B slides before coming to rest.

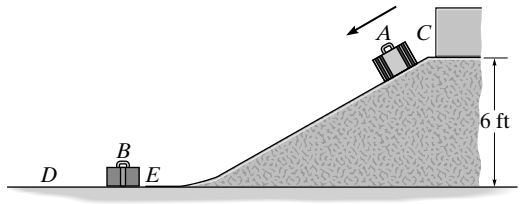

Conservation of Energy: The datum is set at lowest point E. When the suitcase A is at point C it is 6 ft *above* the datum. Its gravitational potential energy is $15(6) = 90.0\ \text{ft}\cdot\text{lb}$. Applying Eq. 14–21, we have

$$T_1 + V_1 = T_2 + V_2$$

$$0 + 90.0 = \frac{1}{2}\left(\frac{15}{32.2}\right)(v_A)_1^2 + 0$$

$$(v_A)_1 = 19.66\ \text{ft/s} = 19.7\ \text{ft/s} \qquad \textbf{Ans.}$$

Conservation of Momentum:

$$m_A(v_A)_1 + m_B(v_B)_1 = m_A(v_A)_2 + m_B(v_B)_2$$

$$(\overset{+}{\leftarrow}) \qquad \left(\frac{15}{32.2}\right)(19.66) + 0 = \left(\frac{15}{32.2}\right)(v_A)_2 + \left(\frac{10}{32.2}\right)(v_B)_2 \qquad \textbf{[1]}$$

Coefficient of Restitution:

$$e = \frac{(v_B)_2 - (v_A)_2}{(v_A)_1 - (v_B)_1}$$

$$(\overset{+}{\leftarrow}) \qquad 0.3 = \frac{(v_B)_2 - (v_A)_2}{19.66 - 0} \qquad \textbf{[2]}$$

Solving Eqs. [1] and [2] yields

$$(v_A)_2 = 9.435\ \text{ft/s} = 9.44\ \text{ft/s} \leftarrow \qquad \textbf{Ans.}$$

$$(v_B)_2 = 15.33\ \text{ft/s} = 15.3\ \text{ft/s} \leftarrow \qquad \textbf{Ans.}$$

Principle of Work and Energy: $N_B = 10.0$ lb. Thus, the friction $F_f = \mu_k N_B = 0.4(10.0) = 4.00$ lb. The friction F_f which acts in the opposite direction to that of displacement does *negative* work. Applying Eq. 14–7, we have

$$T_1 + \sum U_{1-2} = T_2$$

$$\frac{1}{2}\left(\frac{10}{32.2}\right)\left(15.33^2\right) + (-4.00 s_B) = 0$$

$$s_B = 9.13\ \text{ft} \qquad \textbf{Ans.}$$

© 2010 Pearson Education, Inc., Upper Saddle River, NJ. All rights reserved. This material is protected under all copyright laws as they currently exist. No portion of this material may be reproduced, in any form or by any means, without permission in writing from the publisher.

15–59. The 2-kg ball is thrown at the suspended 20-kg block with a velocity of 4 m/s. If the coefficient of restitution between the ball and the block is $e = 0.8$, determine the maximum height h to which the block will swing before it momentarily stops.

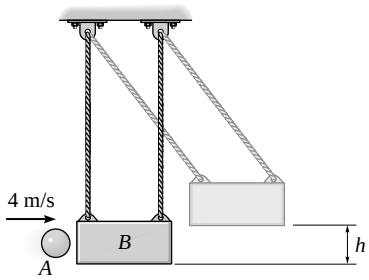

System:

$$\left(\overset{+}{\rightarrow}\right) \qquad \Sigma m_1 v_1 = \Sigma m_2 v_2$$

$$(2)(4) + 0 = (2)(v_A)_2 + (20)(v_B)_2$$

$$(v_A)_2 + 10(v_B)_2 = 4$$

$$\left(\overset{+}{\rightarrow}\right) \qquad e = \frac{(v_B)_2 - (v_A)_2}{(v_A)_1 - (v_B)_1}$$

$$0.8 = \frac{(v_B)_2 - (v_A)_2}{4 - 0}$$

$$(v_B)_2 - (v_A)_2 = 3.2$$

Solving:

$(v_A)_2 = -2.545$ m/s

$(v_B)_2 = 0.6545$ m/s

Block:

Datum at lowest point.

$$T_1 + V_1 = T_2 + V_2$$

$$\frac{1}{2}(20)(0.6545)^2 + 0 = 0 + 20(9.81)h$$

$h = 0.0218$ m $= 21.8$ mm **Ans.**

© 2010 Pearson Education, Inc., Upper Saddle River, NJ. All rights reserved. This material is protected under all copyright laws as they currently exist. No portion of this material may be reproduced, in any form or by any means, without permission in writing from the publisher.

***15–60.** The 2-kg ball is thrown at the suspended 20-kg block with a velocity of 4 m/s. If the time of impact between the ball and the block is 0.005 s, determine the average normal force exerted on the block during this time. Take $e = 0.8$.

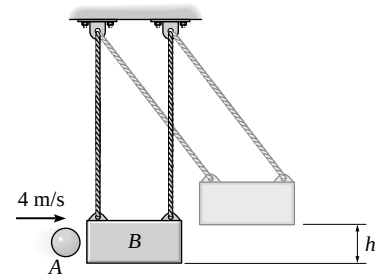

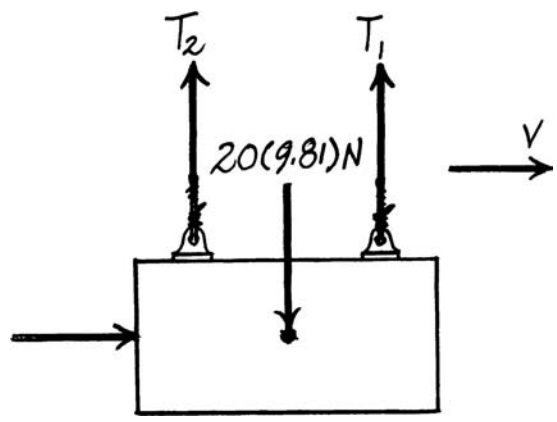

System:

$$\left(\overset{+}{\rightarrow}\right) \qquad \Sigma m_1 v_1 = \Sigma m_2 v_2$$

$$(2)(4) + 0 = (2)(v_A)_2 + (20)(v_B)_2$$

$$(v_A)_2 + 10(v_B)_2 = 4$$

$$\left(\overset{+}{\rightarrow}\right) \qquad e = \frac{(v_B)_2 - (v_A)_2}{(v_A)_1 - (v_B)_1}$$

$$0.8 = \frac{(v_B)_2 + (v_A)_2}{4 - 0}$$

$$(v_B)_2 - (v_A)_2 = 3.2$$

Solving:

$(v_A)_2 = -2.545$ m/s

$(v_B)_2 = 0.6545$ m/s

Block:

$$\left(\overset{+}{\rightarrow}\right) \qquad m v_1 + \Sigma \int F\, dt = m v_2$$

$$0 + F(0.005) = 20(0.6545)$$

$$F = 2618 \text{ N} = 2.62 \text{ kN}$$ **Ans.**

© 2010 Pearson Education, Inc., Upper Saddle River, NJ. All rights reserved. This material is protected under all copyright laws as they currently exist. No portion of this material may be reproduced, in any form or by any means, without permission in writing from the publisher.

•15–61. The slider block B is confined to move within the smooth slot. It is connected to two springs, each of which has a stiffness of $k = 30$ N/m. They are originally stretched 0.5 m when $s = 0$ as shown. Determine the maximum distance, s_{max}, block B moves after it is hit by block A which is originally traveling at $(v_A)_1 = 8$ m/s. Take $e = 0.4$ and the mass of each block to be 1.5 kg.

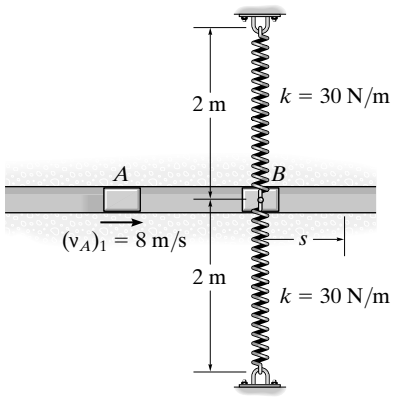

$$\left(\overset{+}{\rightarrow}\right) \qquad \Sigma m\, v_1 = \Sigma m\, v_2$$

$$(1.5)(8) + 0 = (1.5)(v_A)_2 + (1.5)(v_B)_2$$

$$\left(\overset{+}{\rightarrow}\right) \qquad e = \frac{(v_B)_2 - (v_A)_2}{(v_A)_1 - (v_B)_1}$$

$$0.4 = \frac{(v_B)_2 - (v_A)_2}{8 - 0}$$

Solving:

$(v_A)_2 = 2.40$ m/s

$(v_B)_2 = 5.60$ m/s

$T_1 + V_1 + T_2 + V_2$

$$\frac{1}{2}(1.5)(5.60)^2 + 2\left[\frac{1}{2}(30)(0.5)^2\right] = 0 + 2\left[\frac{1}{2}(3)\left(\sqrt{s_{max}^2 + 2^2} - 1.5\right)^2\right]$$

$s_{max} = 1.53$ m **Ans.**

© 2010 Pearson Education, Inc., Upper Saddle River, NJ. All rights reserved. This material is protected under all copyright laws as they currently exist. No portion of this material may be reproduced, in any form or by any means, without permission in writing from the publisher.

15–62. In Prob. 15–61 determine the average net force between blocks A and B during impact if the impact occurs in 0.005 s.

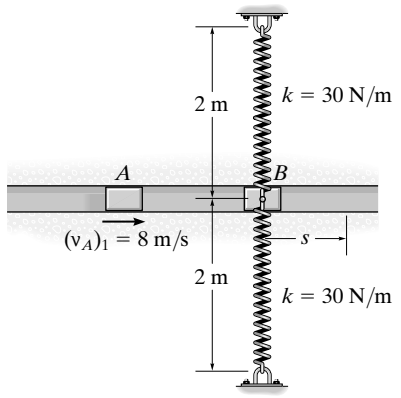

$$\left(\overset{+}{\rightarrow}\right) \qquad \Sigma m\, v_1 = \Sigma m\, v_2$$

$$(1.5)(8) + 0 = (1.5)(v_A)_2 + (1.5)(v_B)_2$$

$$\left(\overset{+}{\rightarrow}\right) \qquad e = \frac{(v_B)_2 - (v_A)_2}{(v_A)_1 - (v_B)_1}$$

$$0.4 = \frac{(v_B)_2 - (v_A)_2}{8 - 0}$$

Solving:

$(v_A)_2 = 2.40$ m/s

$(v_B)_2 = 5.60$ m/s

Choosing block A:

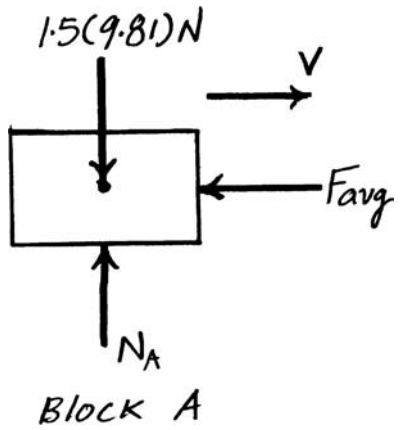

$$\left(\overset{+}{\rightarrow}\right) \qquad m v_1 + \Sigma \int F\, dt = m v_2$$

$$(1.5)(8) - F_{avg}(0.005) = 1.5(2.40)$$

$$F_{avg} = 1.68 \text{ kN}$$ **Ans.**

Choosing block B:

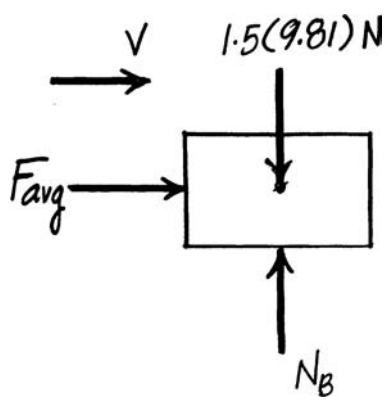

$$\left(\overset{+}{\rightarrow}\right) \qquad m v_1 + \Sigma \int F\, dt = m v_2$$

$$0 + F_{avg}(0.005) = 1.5(5.60)$$

$$F_{avg} = 1.68 \text{ kN}$$ **Ans.**

© 2010 Pearson Education, Inc., Upper Saddle River, NJ. All rights reserved. This material is protected under all copyright laws as they currently exist. No portion of this material may be reproduced, in any form or by any means, without permission in writing from the publisher.

15–63. The pile P has a mass of 800 kg and is being driven into *loose sand* using the 300-kg hammer C which is dropped a distance of 0.5 m from the top of the pile. Determine the initial speed of the pile just after it is struck by the hammer. The coefficient of restitution between the hammer and the pile is $e = 0.1$. Neglect the impulses due to the weights of the pile and hammer and the impulse due to the sand during the impact.

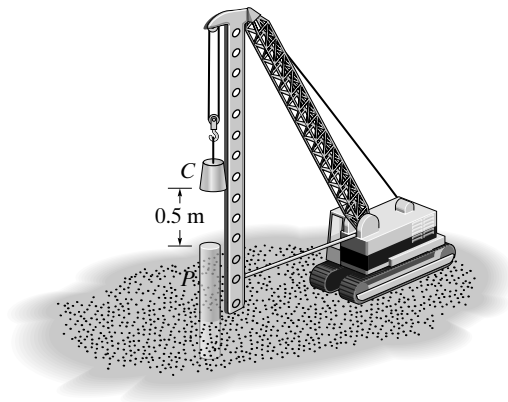

The force of the sand on the pile can be considered nonimpulsive, along with the weights of each colliding body. Hence,

Counter weight: Datum at lowest point.

$$T_1 + V_1 = T_2 + V_2$$

$$0 + 300(9.81)(0.5) = \frac{1}{2}(300)(v)^2 + 0$$

$$v = 3.1321 \text{ m/s}$$

System:

$$(+\downarrow) \qquad \Sigma m v_1 = \Sigma m v_2$$

$$300(3.1321) + 0 = 300(v_C)_2 + 800(v_P)_2$$

$$(v_C)_2 + 2.667(v_P)_2 = 3.1321$$

$$(+\downarrow) \qquad e = \frac{(v_P)_2 - (v_C)_2}{(v_C)_1 - (v_P)_1}$$

$$0.1 = \frac{(v_P)_2 - (v_C)_2}{3.1321 - 0}$$

$$(v_P)_2 - (v_C)_2 = 0.31321$$

Solving:

$(v_P)_2 = 0.940$ m/s **Ans.**

$(v_C)_2 = 0.626$ m/s

© 2010 Pearson Education, Inc., Upper Saddle River, NJ. All rights reserved. This material is protected under all copyright laws as they currently exist. No portion of this material may be reproduced, in any form or by any means, without permission in writing from the publisher.

***15–64.** The pile P has a mass of 800 kg and is being driven into *loose sand* using the 300-kg hammer C which is dropped a distance of 0.5 m from the top of the pile. Determine the distance the pile is driven into the sand after one blow if the sand offers a frictional resistance against the pile of 18 kN. The coefficient of restitution between the hammer and the pile is $e = 0.1$. Neglect the impulses due to the weights of the pile and hammer and the impulse due to the sand during the impact.

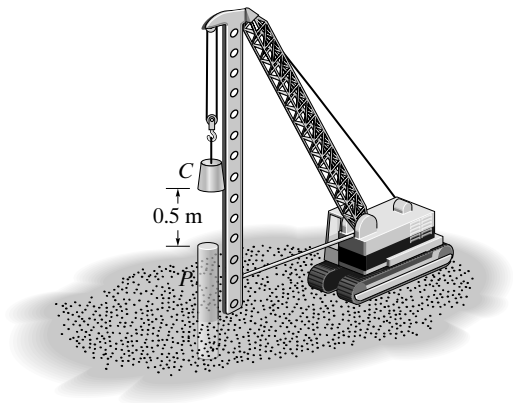

The force of the sand on the pile can be considered nonimpulsive, along with the weights of each colliding body. Hence,

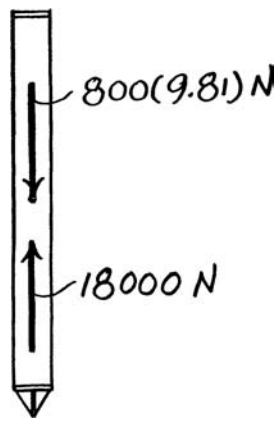

Counter weight: Datum at lowest point,

$$T_1 + V_1 = T_2 + V_2$$

$$0 + 300(9.81)(0.5) = \frac{1}{2}(300)(v)^2 + 0$$

$$v = 3.1321 \text{ m/s}$$

System:

$$(+\downarrow) \qquad \Sigma m\, v_1 = \Sigma m\, v_2$$

$$300(3.1321) + 0 = 300(v_C)_2 + 800(v_P)_2$$

$$(v_C)_2 + 2.667(v_P)_2 = 3.1321$$

$$(+\downarrow) \qquad e = \frac{(v_P)_2 - (v_C)_2}{(v_C)_1 - (v_P)_1}$$

$$0.1 = \frac{(v_P)_2 - (v_C)_2}{3.1321 - 0}$$

$$(v_P)_2 - (v_C)_2 = 0.31321$$

Solving:

$$(v_P)_2 = 0.9396 \text{ m/s}$$

$$(v_C)_2 = 0.6264 \text{ m/s}$$

Pile:

$$T_2 + \Sigma U_{2-3} = T_3$$

$$\frac{1}{2}(800)(0.9396)^2 + 800(9.81)d - 18\,000d = 0$$

$$d = 0.0348 \text{ m} = 34.8 \text{ mm}$$ **Ans.**

© 2010 Pearson Education, Inc., Upper Saddle River, NJ. All rights reserved. This material is protected under all copyright laws as they currently exist. No portion of this material may be reproduced, in any form or by any means, without permission in writing from the publisher.

•15–65. The girl throws the ball with a horizontal velocity of $v_1 = 8$ ft/s. If the coefficient of restitution between the ball and the ground is $e = 0.8$, determine (a) the velocity of the ball just after it rebounds from the ground and (b) the maximum height to which the ball rises after the first bounce.

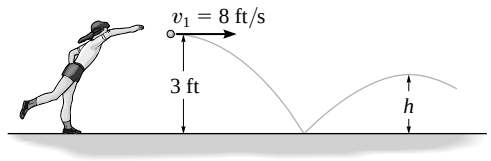

Kinematics: By considering the vertical motion of the falling ball, we have

$$(+\downarrow) \qquad (v_1)_y^2 = (v_0)_y^2 + 2a_c\left[s_y - (s_0)_y\right]$$

$$(v_1)_y^2 = 0^2 + 2(32.2)(3 - 0)$$

$$(v_1)_y = 13.90 \text{ ft/s}$$

Coefficient of Restitution (*y*):

$$e = \frac{(v_g)_2 - (v_2)_y}{(v_1)_y - (v_g)_1}$$

$$(+\uparrow) \qquad 0.8 = \frac{0 - (v_2)_y}{-13.90 - 0}$$

$$(v_2)_y = 11.12 \text{ ft/s}$$

Conservation of "*x*" Momentum: The momentum is conserved along the x axis.

$$\left(\overset{+}{\rightarrow}\right) \qquad m(v_x)_1 = m(v_x)_2\,; \qquad (v_x)_2 = 8 \text{ ft/s} \rightarrow$$

The magnitude and the direction of the rebounding velocity for the ball is

$$v_2 = \sqrt{(v_x)_2^2 + (v_y)_2^2} = \sqrt{8^2 + 11.12^2} = 13.7 \text{ ft/s} \qquad \textbf{Ans.}$$

$$\theta = \tan^{-1}\left(\frac{11.12}{8}\right) = 54.3° \qquad \textbf{Ans.}$$

Kinematics: By considering the vertical motion of tfie ball after it rebounds from the ground, we have

$$(+\uparrow) \qquad (v)_y^2 = (v_2)_y^2 + 2a_c\left[s_y - (s_2)_y\right]$$

$$0 = 11.12^2 + 2(-32.2)(h - 0)$$

$$h = 1.92 \text{ ft} \qquad \textbf{Ans.}$$

© 2010 Pearson Education, Inc., Upper Saddle River, NJ. All rights reserved. This material is protected under all copyright laws as they currently exist. No portion of this material may be reproduced, in any form or by any means, without permission in writing from the publisher.

15–66. During an impact test, the 2000-lb weight is released from rest when $\theta = 60°$. It swings downwards and strikes the concrete blocks, rebounds and swings back up to $\theta = 15°$ before it momentarily stops. Determine the coefficient of restitution between the weight and the blocks. Also, find the impulse transferred between the weight and blocks during impact. Assume that the blocks do not move after impact.

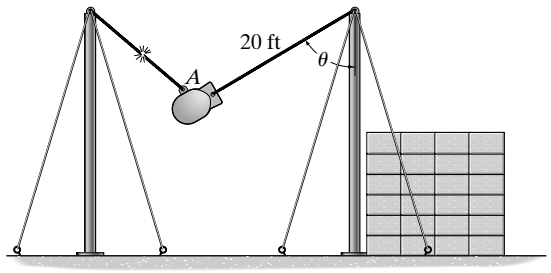

Conservation of Energy: First, consider the weight's fall from position A to position B as shown in Fig. a,

$$T_A + V_A = T_B + V_B$$

$$\frac{1}{2}m_A v_A{}^2 + (V_g)_A = \frac{1}{2}m(v_B)_1{}^2 + (V_g)_B$$

$$0 + [-2000(20 \sin 30°)] = \frac{1}{2}\left(\frac{2000}{32.2}\right)(v_B)_1{}^2 + [-2000(20)]$$

$$(v_B)_1 = 25.38\,\text{ft/s} \rightarrow$$

Subsequently, we will consider the weight rebounds from position B to position C.

$$T_B + V_B = T_C + V_C$$

$$\frac{1}{2}m(v_B)_1{}^2 + (V_g)_B = \frac{1}{2}mv_C{}^2 + (V_g)_C$$

$$\frac{1}{2}\left(\frac{2000}{32.2}\right)(v_B)_1{}^2 + [-2000(20)] = 0 + [-2000(20 \sin 75°)]$$

$$(v_B)_2 = 6.625\ \text{ft/s} \leftarrow$$

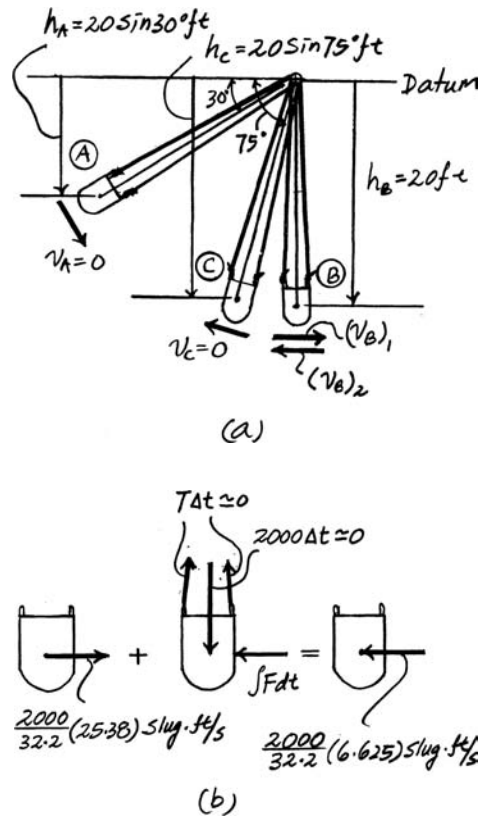

Coefficient of Restitution: Since the concrete blocks do not move, the coefficient of restitution can be written as

$$(\overset{+}{\rightarrow}) \qquad e = -\frac{(v_B)_2}{(v_B)_1} = \frac{(-6.625)}{25.38} = 0.261 \qquad \textbf{Ans.}$$

Principle of Impulse and Momentum: By referring to the Impulse and momentum diagrams shown in Fig. b,

$$(\overset{+}{\rightarrow}) \qquad m(v_1)_x + \Sigma \int_{t_2}^{t_1} F_x dt = m(v_2)_x$$

$$\frac{2000}{32.2}(25.38) - \int F dt = -\frac{2000}{32.2}(6.625)$$

$$\int F dt = 1987.70\ \text{lb}\cdot\text{s} = 1.99\ \text{kip}\cdot\text{s} \qquad \textbf{Ans.}$$

© 2010 Pearson Education, Inc., Upper Saddle River, NJ. All rights reserved. This material is protected under all copyright laws as they currently exist. No portion of this material may be reproduced, in any form or by any means, without permission in writing from the publisher.

15–67. The 100-lb crate A is released from rest onto the smooth ramp. After it slides down the ramp it strikes the 200-lb crate B that rests against the spring of stiffness $k = 600$ lb/ft. If the coefficient of restitution between the crates is $e = 0.5$, determine their velocities just after impact. Also, what is the spring's maximum compression? The spring is originally unstretched.

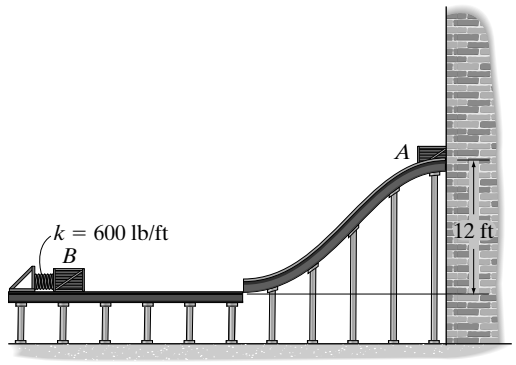

Conservation of Energy: By considering crate A's fall from position (1) to position (2) as shown in Fig. a,

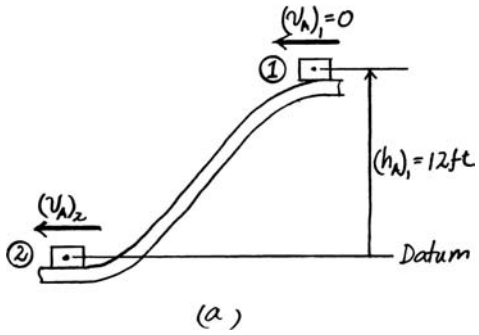

$$(T_A)_1 + (V_A)_1 = (T_A)_2 + (V_A)_2$$

$$\frac{1}{2}m_A(v_A)_1{}^2 + (V_g)_1 = \frac{1}{2}m_A(v_A)_2{}^2 + (V_g)_2$$

$$0 + 100(12) = \frac{1}{2}\left(\frac{100}{32.2}\right)(v_A)_2{}^2 + 0$$

$$(v_A)_2 = 27.80 \text{ ft/s}$$

Conservation of Linear Momentum: The linear momentum of the system is conserved along the x axis (line of impact). By referring to Fig. b,

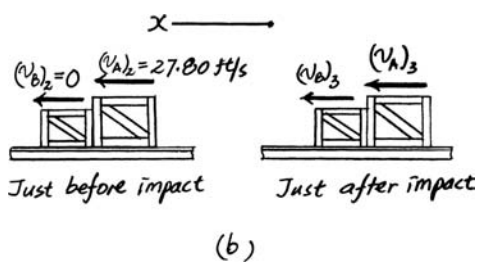

$$(\overset{+}{\leftarrow}) \qquad m_A(v_A)_2 + m_B(v_B)_2 = m_A(v_A)_3 + m_B(v_B)_3$$

$$\left(\frac{100}{32.2}\right)(27.80) + 0 = \left(\frac{100}{32.2}\right)(v_A)_3 + \left(\frac{200}{32.2}\right)(v_B)_3$$

$$100(v_A)_3 + 200(v_B)_3 = 2779.93 \qquad \textbf{(1)}$$

Coefficient of Restitution:

$$(\overset{+}{\leftarrow}) \qquad e = \frac{(v_B)_3 - (v_A)_3}{(v_A)_2 - (v_B)_2}$$

$$0.5 = \frac{(v_B)_3 - (v_A)_3}{27.80 - 0}$$

$$(v_B)_3 - (v_A)_3 = 13.90 \qquad \textbf{(2)}$$

Solving Eqs. (1) and (2), yields

$$(v_B)_3 = 13.90 \text{ ft/s} = 13.9 \text{ ft/s} \leftarrow \qquad (v_A)_3 = 0 \qquad \textbf{Ans.}$$

Conservation of Energy: The maximum compression of the spring occurs when crate B momentarily stops. By considering the conservation of energy of crate B,

$$(T_B)_3 + (V_B)_3 = (T_B)_4 + (V_B)_4$$

$$\frac{1}{2}m_B(v_B)_3{}^2 + \frac{1}{2}ks_3{}^2 = \frac{1}{2}m_B(v_B)_4{}^2 + \frac{1}{2}ks_{\max}{}^2$$

$$\frac{1}{2}\left(\frac{200}{32.2}\right)(13.90^2) + 0 = 0 + \frac{1}{2}(600)s_{\max}{}^2$$

$$s_{\max} = 1.41 \text{ ft} \qquad \textbf{Ans.}$$

© 2010 Pearson Education, Inc., Upper Saddle River, NJ. All rights reserved. This material is protected under all copyright laws as they currently exist. No portion of this material may be reproduced, in any form or by any means, without permission in writing from the publisher.

***15–68.** A ball has a mass m and is dropped onto a surface from a height h. If the coefficient of restitution is e between the ball and the surface, determine the time needed for the ball to stop bouncing.

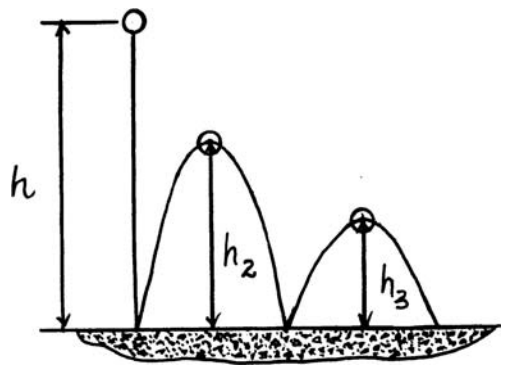

Just before impact:

$$T_1 + V_1 = T_2 + V_2$$

$$0 + mgh = \frac{1}{2}mv^2 + 0$$

$$v = \sqrt{2gh}$$

Time to fall:

$(+\downarrow)$ $$v = v_0 + a_c t$$

$$v = v_0 + gt_1$$

$$\sqrt{2gh} = 0 + gt_1$$

$$t_1 = \sqrt{\frac{2h}{g}}$$

After impact:

$(+\uparrow)$ $$e = \frac{v^2}{v}$$

$$v_2 = e\sqrt{2gh}$$

Height after first bounce: Datum at lowest point

$$T_2 + V_2 = T_3 + V_3$$

$$\frac{1}{2}m\left(e\sqrt{2gh}\right)^2 + 0 = 0 + mgh_2$$

$$h_2 = \frac{1}{2}e^2\left(\frac{2\,gh}{g}\right) = e^2h$$

Time to rise to h_2:

$(+\uparrow)$ $$v = v_0 + a_c t$$

$$v_3 = v_2 - gt_2$$

$$0 = e\sqrt{2gh} - gt_2$$

$$t_2 = e\sqrt{\frac{2h}{g}}$$

© 2010 Pearson Education, Inc., Upper Saddle River, NJ. All rights reserved. This material is protected under all copyright laws as they currently exist. No portion of this material may be reproduced, in any form or by any means, without permission in writing from the publisher.

***15–68. Continued**

Total time for first bounce

$$t_{1b} = t_1 + t_2 = \sqrt{\frac{2h}{g}} + e\sqrt{\frac{2h}{g}} = \sqrt{\frac{2h}{g}}(1 + e)$$

For the second bounce.

$$t_{2b} = \sqrt{\frac{2h_2}{g}}(1 + e) = \sqrt{\frac{2gh}{g}}(1 + e)e$$

For the third bounce.

$$h_3 = e^2 h_2 = e^2\left(e^2 h\right) = e^4 h$$

$$t_{3b} = \sqrt{\frac{2h_3}{g}}(1 + e) = \sqrt{\frac{2h}{g}}(1 + e)e^2$$

Thus the total time for an infinite number of bounces:

$$t_{tot} = \sqrt{\frac{2h}{g}}(1 + e)\left(1 + e + e^2 + e^3 + \ldots\right)$$

$$t_{tot} = \sqrt{\frac{2h}{g}}\left(\frac{1 + e}{1 - e}\right)$$ **Ans.**

© 2010 Pearson Education, Inc., Upper Saddle River, NJ. All rights reserved. This material is protected under all copyright laws as they currently exist. No portion of this material may be reproduced, in any form or by any means, without permission in writing from the publisher.

•15–69. To test the manufactured properties of 2-lb steel balls, each ball is released from rest as shown and strikes the 45° smooth inclined surface. If the coefficient of restitution is to be $e = 0.8$, determine the distance s to where the ball strikes the horizontal plane at A. At what speed does the ball strike point A?

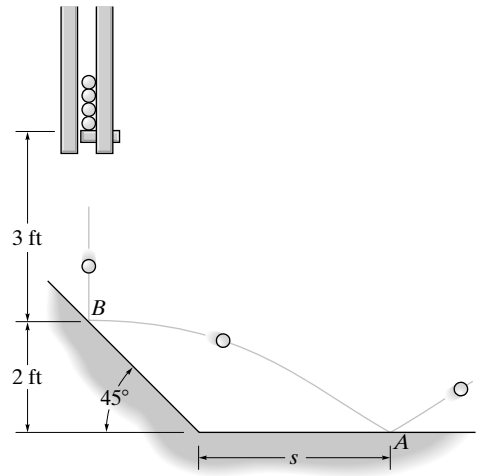

Just before impact Datum at lowest point

$$T_1 + V_1 = T_2 + V_2$$

$$0 + (2)(3) = \frac{1}{2}\left(\frac{2}{32.2}\right)(v_B)_1^2 + 0$$

$$(v_B)_1 = 13.900 \text{ ft/s}$$

At B:

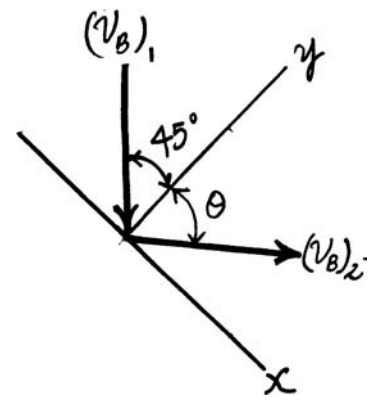

$(+\searrow)$ $$\Sigma m(v_B)_{x1} = \Sigma m(v_B)_{x2}$$

$$\left(\frac{2}{32.2}\right)(13.900)\sin 45° = \left(\frac{2}{32.2}\right)(v_B)_2 \sin\theta$$

$$(v_B)_2 \sin\theta = 9.829 \text{ ft/s} \qquad \textbf{(1)}$$

$(+\nearrow)$ $$e = \frac{(v_B)_{y2} - 0}{0 - (v_B)_{y1}}$$

$$0.8 = \frac{(v_B)_2 \cos\theta - 0}{0 - (-13.900)\cos 45°}$$

$$(v_B)_2 \cos\theta = 7.863 \text{ ft/s} \qquad \textbf{(2)}$$

Solving Eqs. (1) and (2):

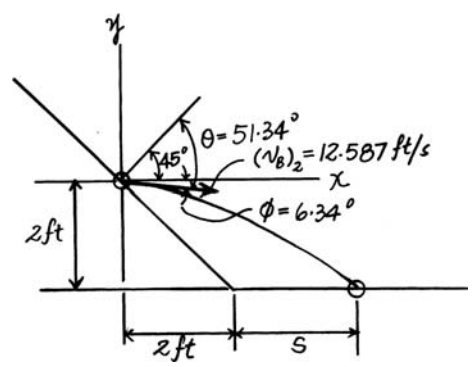

$$(v_B)_2 = 12.587 \text{ ft/s} \qquad \theta = 51.34°$$

$$\phi = 51.34° - 45° = 6.34°$$

$(+\downarrow)$ $$v^2 = v_0^2 + 2a_c(s - s_0)$$

$$\left(v_{A_r}\right)^2 = \left[12.587 \sin 6.34°\right]^2 + 2(32.2)(2 - 0)$$

$$v_{A_r} = 11.434 \text{ ft/s}$$

$(+\downarrow)$ $$v = v_0 + a_c t$$

$$11.434 = 12.587 \sin 6.34° + 32.2t$$

$$t = 0.3119 \text{ s}$$

$(\overset{+}{\rightarrow})$ $$v_{Ax} = 12.587 \cos 6.34° = 12.510 \text{ ft/s}$$

$$s_t = v_B t$$

$$s + \frac{2}{\tan 45°} = (12.51)(0.3119)$$

$$s = 1.90 \text{ ft} \qquad \textbf{Ans.}$$

$$v_A = \sqrt{(12.510)^2 + (11.434)^2} = 16.9 \text{ ft/s} \qquad \textbf{Ans.}$$

© 2010 Pearson Education, Inc., Upper Saddle River, NJ. All rights reserved. This material is protected under all copyright laws as they currently exist. No portion of this material may be reproduced, in any form or by any means, without permission in writing from the publisher.

15–70. Two identical balls A and B of mass m are suspended from cords of length $L/2$ and L, respectively. Ball A is released from rest when $\phi = 90°$ and swings down to $\phi = 0°$, where it strikes B. Determine the speed of each ball just after impact and the maximum angle θ through which B will swing. The coefficient of restitution between the balls is e.

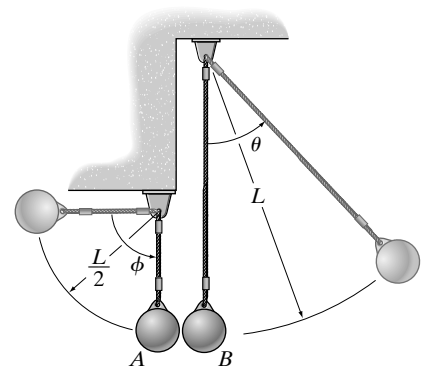

Conservation of Energy: First, we will consider bob A's swing from position (1) to position (2) as shown in Fig. a,

$$(T_A)_1 + (V_A)_1 = (T_A)_2 + (V_A)_2$$

$$\frac{1}{2}m_A(v_A)_1{}^2 + \left(V_g\right)_1 = \frac{1}{2}m_A(v_A)_2{}^2 + \left(V_g\right)_2$$

$$0 + mg\left(\frac{L}{2}\right) = \frac{1}{2}m(v_A)_2{}^2 + 0$$

$$(v_A)_2 = \sqrt{gL}$$

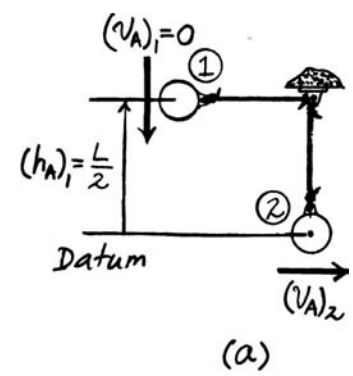

Conservation of Linear Momentum: The linear momentum of the system is conserved along the x axis (line of impact). By referring to Fig. b,

$$(\overset{+}{\rightarrow}) \qquad m_A(v_A)_2 + m_B(v_B)_2 = m_A(v_A)_3 + m_B(v_B)_3$$

$$m\sqrt{gL} + 0 = m(v_A)_3 + m(v_B)_3$$

$$(v_A)_3 + (v_B)_3 = \sqrt{gL} \qquad \textbf{(1)}$$

Coefficient of Restitution: Applying Eq. 15–11 we have

$$(\overset{+}{\rightarrow}) \qquad e = \frac{(v_B)_3 - (v_A)_3}{(v_A)_2 - (v_B)_2}$$

$$e = \frac{(v_B)_3 + (v_A)_3}{\sqrt{gL} - 0}$$

$$(v_B)_3 - (v_A)_3 = e\sqrt{gL} \qquad \textbf{(2)}$$

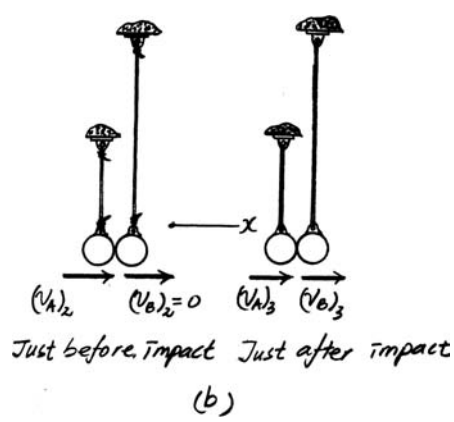

Solving Eqs. (1) and (2), yields

$$(v_A)_3 = \left(\frac{1-e}{2}\right)\sqrt{gL} \qquad \textbf{Ans.}$$

$$(v_B)_3 = \left(\frac{1+e}{2}\right)\sqrt{gL}$$

Conservation of Energy: We will now consider the swing of B from position (3) to position (4) as shown in Fig. c. Using the result of $(v_B)_3$,

$$(T_B)_3 + (V_B)_3 = (T_B)_4 + (V_B)_4$$

$$\frac{1}{2}m_B(v_B)_3{}^2 + \left(V_g\right)_3 = \frac{1}{2}m_B(v_B)_4{}^2 + \left(V_g\right)_4$$

$$\frac{1}{2}m\left[\left(\frac{1+e}{2}\right)\sqrt{gL}\right]^2 + 0 = 0 + mg\left[L(1-\cos\theta)\right]$$

$$\theta = \cos^{-1}\left[1 - \frac{(1+e)^2}{8}\right] \qquad \textbf{Ans.}$$

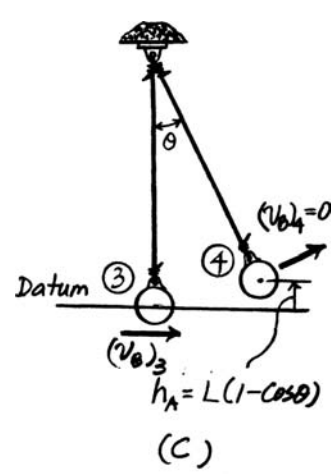

© 2010 Pearson Education, Inc., Upper Saddle River, NJ. All rights reserved. This material is protected under all copyright laws as they currently exist. No portion of this material may be reproduced, in any form or by any means, without permission in writing from the publisher.

15–71. The 5-Mg truck and 2-Mg car are traveling with the free-rolling velocities shown just before they collide. After the collision, the car moves with a velocity of 15 km/h to the right *relative* to the truck. Determine the coefficient of restitution between the truck and car and the loss of energy due to the collision.

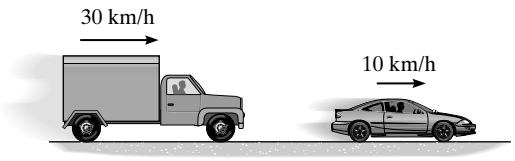

Conservation of Linear Momentum: The linear momentum of the system is conserved along the x axis (line of impact).

The initial speeds of the truck and car are $(v_t)_1 = \left[30\left(10^3\right)\frac{\text{m}}{\text{h}}\right]\left(\frac{1\text{ h}}{3600\text{ s}}\right) = 8.333\text{ m/s}$ and $(v_c)_1 = \left[10\left(10^3\right)\frac{\text{m}}{\text{h}}\right]\left(\frac{1\ h}{3600\text{ s}}\right) = 2.778\text{ m/s}$.

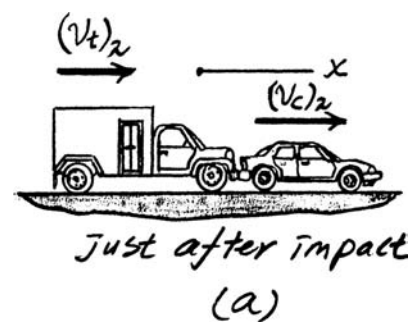

By referring to Fig. *a*,

$$\left(\overset{+}{\rightarrow}\right) \qquad m_t(v_t)_1 + m_c(v_c)_1 = m_t(v_t)_2 + m_c(v_c)_2$$

$$5000(8.333) + 2000(2.778) = 5000(v_t)_2 + 2000(v_c)_2$$

$$5(v_t)_2 + 2(v_c)_2 = 47.22 \qquad \textbf{(1)}$$

Coefficient of Restitution: Here, $(v_{c/t}) = \left[15\left(10^3\right)\frac{\text{m}}{\text{h}}\right]\left(\frac{1\text{ h}}{3600\text{ s}}\right) = 4.167\text{ m/s} \rightarrow$. Applying the relative velocity equation,

$$(\mathbf{v}_c)_2 = (\mathbf{v}_t)_2 + (\mathbf{v}_{c/t})_2$$

$$\left(\overset{+}{\rightarrow}\right) \qquad (v_c)_2 = (v_t)_2 + 4.167$$

$$(v_c)_2 - (v_t)_2 = 4.167 \qquad \textbf{(2)}$$

Applying the coefficient of restitution equation,

$$\left(\overset{+}{\rightarrow}\right) \qquad e = \frac{(v_c)_2 - (v_t)_2}{(v_t)_1 - (v_c)_1}$$

$$e = \frac{(v_c)_2 - (v_t)_2}{8.333 - 2.778} \qquad \textbf{(3)}$$

© 2010 Pearson Education, Inc., Upper Saddle River, NJ. All rights reserved. This material is protected under all copyright laws as they currently exist. No portion of this material may be reproduced, in any form or by any means, without permission in writing from the publisher.

15–71. Continued

Substituting Eq. (2) into Eq. (3),

$$e = \frac{4.167}{8.333 - 2.778} = 0.75 \qquad \textbf{Ans.}$$

Solving Eqs. (1) and (2) yields

$$(v_t)_2 = 5.556 \text{ m/s}$$

$$(v_c)_2 = 9.722 \text{ m/s}$$

Kinetic Energy: The kinetic energy of the system just before and just after the collision are

$$T_1 = \frac{1}{2} m_t (v_t)_1{}^2 + \frac{1}{2} m_c (v_c)_1{}^2$$

$$= \frac{1}{2}(5000)(8.333^2) + \frac{1}{2}(2000)(2.778^2)$$

$$= 181.33\left(10^3\right) \text{ J}$$

$$T_2 = \frac{1}{2} m_t (v_t)_2{}^2 + \frac{1}{2} m_c (v_c)_2{}^2$$

$$= \frac{1}{2}(5000)(5.556^2) + \frac{1}{2}(2000)(9.722^2)$$

$$= 171.68\left(10^3\right) \text{J}$$

Thus,

$$\Delta E = T_1 - T_2 = 181.33\left(10^3\right) - 171.68\left(10^3\right)$$

$$= 9.645\left(10^3\right) \text{ J}$$

$$= 9.65 \text{kJ} \qquad \textbf{Ans.}$$

© 2010 Pearson Education, Inc., Upper Saddle River, NJ. All rights reserved. This material is protected under all copyright laws as they currently exist. No portion of this material may be reproduced, in any form or by any means, without permission in writing from the publisher.

***15–72.** A 10-kg block A is released from rest 2 m above the 5-kg plate P, which can slide freely along the smooth vertical guides BC and DE. Determine the velocity of the block and plate just after impact. The coefficient of restitution between the block and the plate is $e = 0.75$. Also, find the maximum compression of the spring due to impact. The spring has an unstretched length of 600 mm.

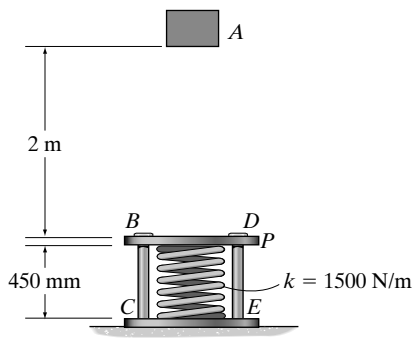

Conservation of Energy: By considering block A's fall from position (1) to position (2) as shown in Fig. a,

$$(T_A)_1 + (V_A)_1 = (T_A)_2 + (V_A)_2$$

$$\frac{1}{2} m_A (v_A)_1^2 + \left(V_g\right)_1 = \frac{1}{2} m_A (v_A)_2^2 + \left(V_g\right)_2$$

$$0 + 10(9.81)(2) = \frac{1}{2}(10)\left(v_A\right)_2^2 + 0$$

$$(v_A)_2 = 6.264 \text{ m/s}$$

Conservation of Linear Momentum: Since the weight of block A and plate **P** and the force developed in the spring are nonimpulsive, the linear momentum of the system is conserved along the line of impact (y axis). By referring to Fig. b,

$$(+\downarrow) \qquad m_A (v_A)_2 + m_P (v_P)_2 = m_A (v_A)_3 + m_P (v_P)_2$$

$$10(6.262) + 0 = 10(v_A)_3 + 5(v_P)_2$$

$$(v_P)_2 + 2(v_A)_3 = 12.528 \qquad \textbf{(1)}$$

Coefficient of Restitution: Applying Eq. 15–11 we have

$$(+\downarrow) \qquad e = \frac{(v_P)_3 - (v_A)_3}{(v_A)_2 - (v_P)_2}$$

$$0.75 = \frac{(v_P)_3 - (v_A)_3}{6.264 - 0}$$

$$(v_P)_3 - (v_A)_3 = 4.698 \qquad \textbf{(2)}$$

Solving Eqs. (1) and (2) yields

$$(v_A)_3 = 2.610 \text{ m/s} \qquad (v_P)_3 = 7.308 \text{ m/s}$$

Conservation of Energy: The maximum compression of the spring occurs when plate P momentarily stops. If we consider the plate's fall fromposition (3) to position (4) as shown in Fig. c,

$$(T_P)_3 + (V_P)_3 = (T_P)_4 + (V_P)_4$$

$$\frac{1}{2} m_P (v_P)_3^2 + \left[\left(V_g\right)_3 + (V_e)_3\right] = \frac{1}{2} m_P (v_P)_4^2 + \left[\left(V_g\right)_4 + (V_e)_4\right]$$

$$\frac{1}{2}(5)(7.308^2) + \left[5(9.81)s_{\max} + \frac{1}{2}(1500)(0.6 - 0.45)^2\right]$$

$$= 0 + \left[0 + \frac{1}{2}(1500)\left[s_{\max} + (0.6 - 0.45)\right]^2\right]$$

$$750 s^2_{\max} + 175.95 s_{\max} - 133.25 = 0$$

$$s_{\max} = 0.3202 \text{ m} = 320 \text{ mm} \qquad \textbf{Ans.}$$

© 2010 Pearson Education, Inc., Upper Saddle River, NJ. All rights reserved. This material is protected under all copyright laws as they currently exist. No portion of this material may be reproduced, in any form or by any means, without permission in writing from the publisher.

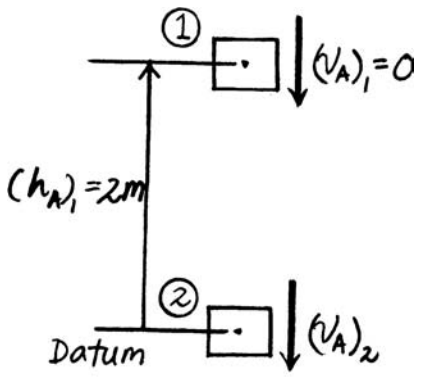

(a)

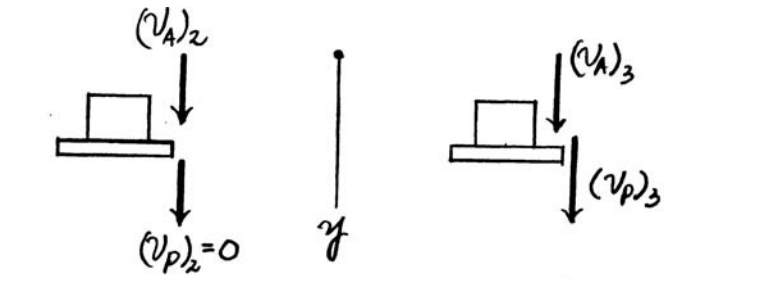

(b)

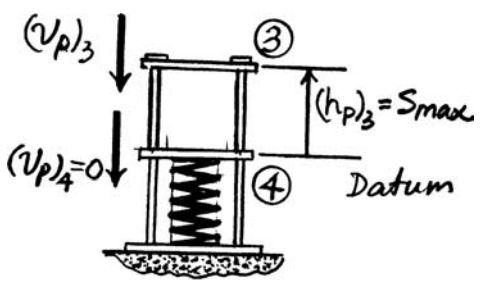

(c)

© 2010 Pearson Education, Inc., Upper Saddle River, NJ. All rights reserved. This material is protected under all copyright laws as they currently exist. No portion of this material may be reproduced, in any form or by any means, without permission in writing from the publisher.

•15–73. A row of n similar spheres, each of mass m, are placed next to each other as shown. If sphere 1 has a velocity of v_1, determine the velocity of the nth sphere just after being struck by the adjacent $(n - 1)$th sphere. The coefficient of restitution between the spheres is e.

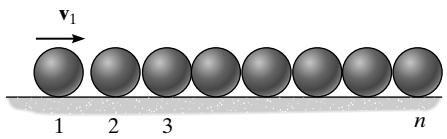

When sphere (1) strikes sphere (2), the linear momentum of the system is conserved along the x axis (line of impact). By referring to Fig. a,

$$(\overset{+}{\rightarrow}) \qquad mv_1 + 0 = mv_1' + mv_2'$$

$$v_1' + v_2' = v_1 \qquad \textbf{(1)}$$

$$(\overset{+}{\rightarrow}) \qquad e = \frac{v_2' - v_1'}{v_1 - 0}$$

$$v_2' - v_1' = ev_1 \qquad \textbf{(2)}$$

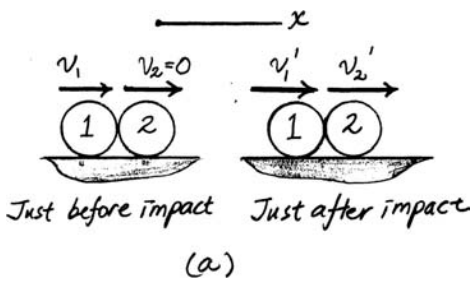

Eliminating v_1' from Eqs. (1) and (2), we obtain

$$v_2' = \left(\frac{1 + e}{2}\right)v_1$$

Subsequently, sphere (2) strikes sphere (3). By referring to Fig. b and using the result of v_2',

$$(\overset{+}{\rightarrow}) \qquad m\left(\frac{1 + e}{2}\right)v_1 + 0 = mv_2'' + mv_3'$$

$$v_2'' + v_3' = \left(\frac{1 + e}{2}\right)v_1 \qquad \textbf{(3)}$$

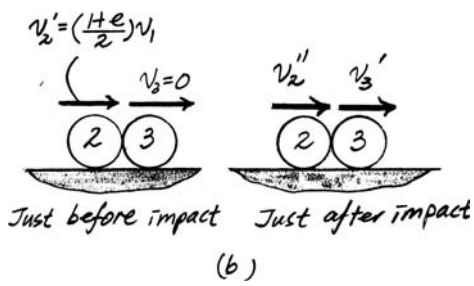

Applying Eq. 15–11 we have

$$(\overset{+}{\rightarrow}) \qquad e = \frac{v_3' - v_2''}{\left(\frac{1 + e}{2}\right)v_1 - 0}$$

$$v_3' - v_2'' = \left[\frac{e(1 + e)}{2}\right]v_1 \qquad \textbf{(4)}$$

Eliminating v_2'' from Eqs. (3) and (4), we obtain

$$v_3' = \left(\frac{1 + e}{2}\right)^2 v_1$$

If we continue to use the above procedures to analyse the impact between spheres (3) and (4), the speed of sphere (4) after the impact.

$$v_4' = \left(\frac{1 + e}{2}\right)^3 v_1$$

Thus, when sphere $(n - 1)$ strikes sphere n, the speed of sphere n just after impact is

$$v_n' = \left(\frac{1 + e}{2}\right)^{n-1} v_1 \qquad \textbf{Ans.}$$

© 2010 Pearson Education, Inc., Upper Saddle River, NJ. All rights reserved. This material is protected under all copyright laws as they currently exist. No portion of this material may be reproduced, in any form or by any means, without permission in writing from the publisher.

15–74. The three balls each have a mass of m. If A is released from rest at θ, determine the angle ϕ to which C rises after collision. The coefficient of restitution between each ball is e.

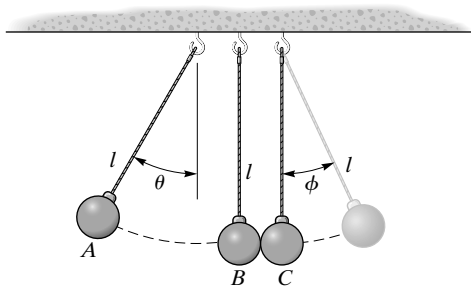

Conservation of Energy: The datum is set at the initial position of ball B. When ball A is $l(1 - \cos\theta)$ *above* the datum its gravitational potential energy is $mg[l(l - \cos\theta)]$. Applying Eq. 14–21, we have

$$T_1 + V_1 = T_2 + V_2$$

$$0 + mg[l(1 - \cos\theta)] = \frac{1}{2}m(v_A)_1^2 + 0$$

$$(v_A)_1 = \sqrt{2gl(1 - \cos\theta)}$$

Conservation of Momentum: When ball A strikes ball B, we have

$$m_A(v_A)_1 + m_B(v_B)_1 = m_A(v_A)_2 + m_B(v_B)_2$$

$$(\overset{+}{\rightarrow}) \qquad m\sqrt{2gl(1 - \cos\theta)} + 0 = m(v_A)_2 + m(v_B)_2 \qquad \textbf{[1]}$$

Coefficient of Restitution:

$$e = \frac{(v_B)_2 - (v_A)_2}{(v_A)_1 - (v_B)_1}$$

$$(\overset{+}{\rightarrow}) \qquad e = \frac{(v_B)_2 - (v_A)_2}{\sqrt{2gl(1 - \cos\theta)} - 0} \qquad \textbf{[2]}$$

Solving Eqs. [1] and [2] yields

$$(v_A)_2 = \frac{(1 - e)\sqrt{2gl(1 - \cos\theta)}}{2}$$

$$(v_B)_2 = \frac{(1 + e)\sqrt{2gl(1 - \cos\theta)}}{2}$$

Conservation of Momentum: When ball B strikes ball C, we have

$$m_B(v_B)_2 + m_C(v_C)_1 = m_B(v_B)_3 + m_C(v_C)_2$$

$$(\overset{+}{\rightarrow}) \quad m\left[\frac{(1 + e)\sqrt{2gl(1 - \cos\theta)}}{2}\right] + 0 = m(v_B)_3 + m(v_C)_2 \qquad \textbf{[3]}$$

Coefficient of Restitution:

$$e = \frac{(v_C)_2 - (v_B)_3}{(v_B)_2 - (v_C)_1}$$

$$(\overset{+}{\rightarrow}) \qquad e = \frac{(v_C)_2 - (v_B)_3}{\dfrac{(1 + e)\sqrt{2gl(1 - \cos\theta)}}{2} - 0} \qquad \textbf{[4]}$$

Solving Eqs. [3] and [4] yields

$$(v_C)_2 = \frac{(1 + e)^2}{4}\sqrt{2gl(1 - \cos\theta)}$$

$$(v_B)_3 = \frac{(1 - e^2)}{4}\sqrt{2gl(1 - \cos\theta)}$$

© 2010 Pearson Education, Inc., Upper Saddle River, NJ. All rights reserved. This material is protected under all copyright laws as they currently exist. No portion of this material may be reproduced, in any form or by any means, without permission in writing from the publisher.

15–74. Continued

Conservation of Energy: The datum is set at the initial position of ball C. When ball C is $l(1 - \cos\phi)$ *above* the datum its gravitational potential energy is $mg[l(1 - \cos\phi)]$. Applying Eq. 14–21, we have

$$T_2 + V_2 = T_3 + V_3$$

$$0 + \frac{1}{2}m\left[\frac{(1+e)^2}{4}\sqrt{2gl(1-\cos\theta)}\right]^2 = 0 + mgl(1-\cos\phi)$$

$$\phi = \cos^{-1}\left[1 - \frac{(1+e)^4}{16}(1-\cos\theta)\right] \qquad \textbf{Ans.}$$

15–75. The cue ball A is given an initial velocity $(v_A)_1 = 5$ m/s. If it makes a direct collision with ball B ($e = 0.8$), determine the velocity of B and the angle θ just after it rebounds from the cushion at C ($e' = 0.6$). Each ball has a mass of 0.4 kg. Neglect the size of each ball.

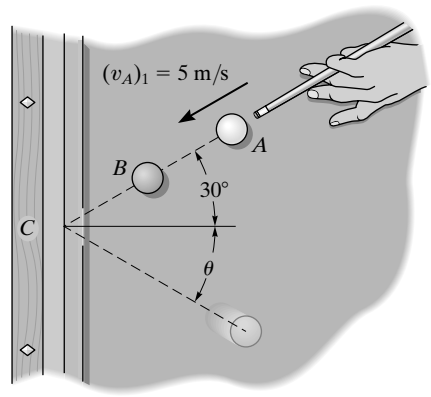

Conservation of Momentum: When ball A strikes ball B, we have

$$m_A(v_A)_1 + m_B(v_B)_1 = m_A(v_A)_2 + m_B(v_B)_2$$

$$(+\ ) \qquad 0.4(5) + 0 = 0.4(v_A)_2 + 0.4(v_B)_2 \qquad \textbf{[1]}$$

Coefficient of Restitution:

$$e = \frac{(v_B)_2 - (v_A)_2}{(v_A)_1 - (v_B)_1}$$

$$(\overset{+}{\leftarrow}) \qquad 0.8 = \frac{(v_B)_2 - (v_A)_2}{5 - 0} \qquad \textbf{[2]}$$

Solving Eqs. [1] and [2] yields

$$(v_A)_2 = 0.500 \text{ m/s} \qquad (v_B)_2 = 4.50 \text{ m/s}$$

Conservation of "y" Momentum: When ball B strikes the cushion at C, we have

$$m_B\left(v_{B_y}\right)_2 = m_B\left(v_{B_y}\right)_3$$

$$(+\downarrow) \qquad 0.4(4.50\sin 30°) = 0.4(v_B)_3\sin\theta$$

$$(v_B)_3\sin\theta = 2.25 \qquad \textbf{[3]}$$

Coefficient of Restitution (x):

$$e = \frac{(v_C)_2 - \left(v_{B_x}\right)_3}{\left(v_{B_x}\right)_2 - (v_C)_1}$$

$$(\overset{+}{\leftarrow}) \qquad 0.6 = \frac{0 - \left[-(v_B)_3\cos\theta\right]}{4.50\cos 30° - 0} \qquad \textbf{[4]}$$

Solving Eqs. [1] and [2] yields

$$(v_B)_3 = 3.24 \text{ m/s} \qquad \theta = 43.9° \qquad \textbf{Ans.}$$

© 2010 Pearson Education, Inc., Upper Saddle River, NJ. All rights reserved. This material is protected under all copyright laws as they currently exist. No portion of this material may be reproduced, in any form or by any means, without permission in writing from the publisher.

***15–76.** The girl throws the 0.5-kg ball toward the wall with an initial velocity $v_A = 10$ m/s. Determine (a) the velocity at which it strikes the wall at B, (b) the velocity at which it rebounds from the wall if the coefficient of restitution $e = 0.5$, and (c) the distance s from the wall to where it strikes the ground at C.

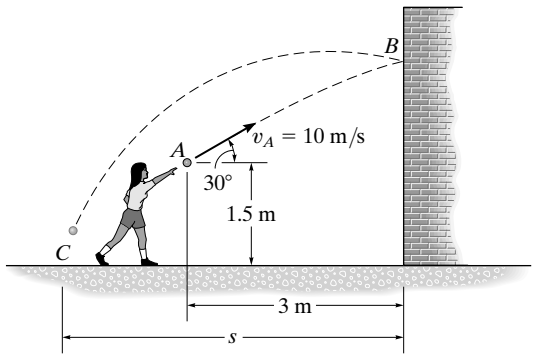

Kinematics: By considering the horizontal motion of the ball before the impact, we have

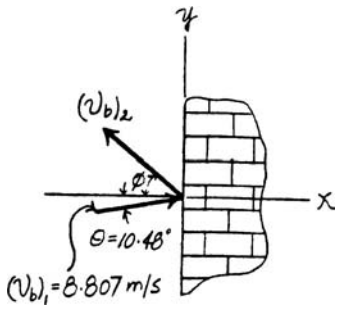

$(\overset{+}{\rightarrow})$ $$s_x = (s_0)_x + v_x t$$

$$3 = 0 + 10\cos 30° t \qquad t = 0.3464 \text{ s}$$

By considering the vertical motion of the ball before the impact, we have

$(+\uparrow)$ $$v_y = (v_0)_y + (a_c)_y t$$

$$= 10 \sin 30° + (-9.81)(0.3464)$$

$$= 1.602 \text{ m/s}$$

The vertical position of point B above the ground is given by

$(+\uparrow)$ $$s_y = (s_0)_y + (v_0)_y t + \frac{1}{2}(a_c)_y t^2$$

$$(s_B)_y = 1.5 + 10 \sin 30°(0.3464) + \frac{1}{2}(-9.81)\left(0.3464^2\right) = 2.643 \text{ m}$$

Thus, the magnitude of the velocity and its directional angle are

$$(v_b)_1 = \sqrt{(10\cos 30°)^2 + 1.602^2} = 8.807 \text{ m/s} = 8.81 \text{ m/s} \qquad \textbf{Ans.}$$

$$\theta = \tan^{-1}\frac{1.602}{10\cos 30°} = 10.48° = 10.5° \qquad \textbf{Ans.}$$

Conservation of "*y*" Momentum: When the ball strikes the wall with a speed of $(v_b)_1 = 8.807$ m/s, it rebounds with a speed of $(v_b)_2$.

$$m_b\left(v_{b_y}\right)_1 = m_b\left(v_{b_y}\right)_2$$

$(\overset{+}{\leftarrow})$ $$m_b(1.602) = m_b\left[(v_b)_2 \sin\phi\right]$$

$$(v_b)_2 \sin\phi = 1.602 \qquad \textbf{[1]}$$

Coefficient of Restitution (*x*):

$$e = \frac{(v_w)_2 - \left(v_{b_x}\right)_2}{\left(v_{b_x}\right)_1 - (v_w)_1}$$

$(\overset{+}{\rightarrow})$ $$0.5 = \frac{0 - \left[-(v_b)_2\cos\phi\right]}{10\cos 30° - 0} \qquad \textbf{[2]}$$

© 2010 Pearson Education, Inc., Upper Saddle River, NJ. All rights reserved. This material is protected under all copyright laws as they currently exist. No portion of this material may be reproduced, in any form or by any means, without permission in writing from the publisher.

***15–76. Continued**

Solving Eqs. [1] and [2] yields

$$\phi = 20.30° = 20.3° \qquad (v_b)_2 = 4.617 \text{ m/s} = 4.62 \text{ m/s} \qquad \textbf{Ans.}$$

Kinematics: By considering the vertical motion of the ball after the impact, we have

$$(+\uparrow) \qquad s_y = (s_0)_y + (v_0)_y t + \frac{1}{2}(a_c)_y t^2$$

$$-2.643 = 0 + 4.617 \sin 20.30° t_1 + \frac{1}{2}(-9.81)t_1^2$$

$$t_1 = 0.9153 \text{ s}$$

By considering the horizontal motion of the ball after the impact, we have

$$(\overset{+}{\leftarrow}) \qquad s_x = (s_0)_x + v_x t$$

$$s = 0 + 4.617 \cos 20.30°(0.9153) = 3.96 \text{ m} \qquad \textbf{Ans.}$$

•15–77. A 300-g ball is kicked with a velocity of $v_A = 25$ m/s at point A as shown. If the coefficient of restitution between the ball and the field is $e = 0.4$, determine the magnitude and direction θ of the velocity of the rebounding ball at B.

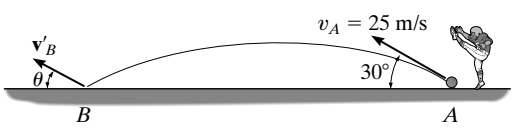

Kinematics: The parabolic trajectory of the football is shown in Fig. *a*. Due to the symmetrical properties of the trajectory, $v_B = v_A = 25$ m/s and $\phi = 30°$.

Conservation of Linear Momentum: Since no impulsive force acts on the football along the x axis, the linear momentum of the football is conserved along the x axis.

$$(\overset{+}{\leftarrow}) \qquad m(v_B)_x = m(v'_B)_x$$

$$0.3(25 \cos 30°) = 0.3(v'_B)_x$$

$$(v'_B)_x = 21.65 \text{ m/s} \leftarrow$$

Coefficient of Restitution: Since the ground does not move during the impact, the coefficient of restitution can be written as

$$(+\uparrow) \qquad e = \frac{0 - (v'_B)_y}{(v_B)_y - 0}$$

$$0.4 = \frac{-(v'_B)_y}{-25 \sin 30°}$$

$$(v'_B)_y = 5 \text{ m/s} \uparrow$$

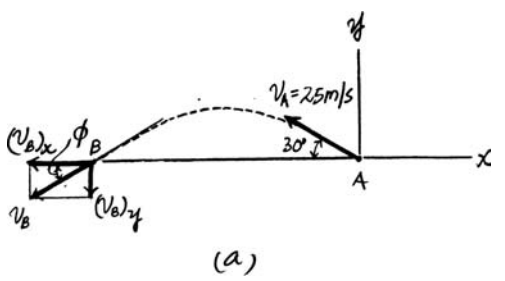

Thus, the magnitude of $\mathbf{v}'_B$ is

$$v'_B = \sqrt{(v'_B)_x + (v'_B)_y} = \sqrt{21.65^2 + 5^2} = 22.2 \text{ m/s} \qquad \textbf{Ans.}$$

and the angle of $\mathbf{v}'_B$ is

$$\theta = \tan^{-1}\left[\frac{(v'_B)_y}{(v'_B)_x}\right] = \tan^{-1}\left(\frac{5}{21.65}\right) = 13.0° \qquad \textbf{Ans.}$$

© 2010 Pearson Education, Inc., Upper Saddle River, NJ. All rights reserved. This material is protected under all copyright laws as they currently exist. No portion of this material may be reproduced, in any form or by any means, without permission in writing from the publisher.

15–78. Using a slingshot, the boy fires the 0.2-lb marble at the concrete wall, striking it at B. If the coefficient of restitution between the marble and the wall is $e = 0.5$, determine the speed of the marble after it rebounds from the wall.

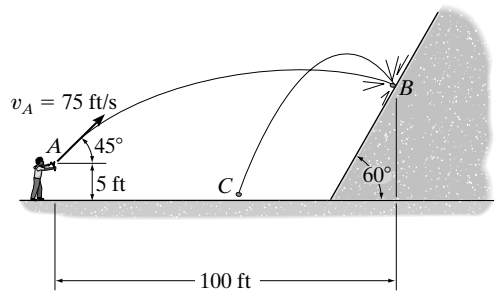

Kinematics: By considering the x and y motion of the marble from A to B, Fig. *a,*

$$\left(\overset{+}{\rightarrow}\right) \qquad (s_B)_x = (s_A)_x + (v_A)_x\, t$$

$$100 = 0 + 75 \cos 45°\, t$$

$$t = 1.886 \text{ s}$$

and

$$\left(+\uparrow\right) \qquad (s_B)_y = (s_A)_y + (v_A)_y\, t + \frac{1}{2} a_y t^2$$

$$(s_B)_y = 0 + 75 \sin 45°(1.886) + \frac{1}{2}(-32.2)(1.886^2)$$

$$= 42.76 \text{ ft}$$

and

$$\left(+\uparrow\right) \qquad (v_B)_y = (v_A)_y + a_y\, t$$

$$(v_B)_y = 75 \sin 45° + (-32.2)(1.886) = -7.684 \text{ ft/s} = 7.684 \text{ ft/s} \downarrow$$

Since $(v_B)_x = (v_A)_x = 75 \cos 45° = 53.03$ ft/s, the magnitude of $\mathbf{v}_B$ is

$$v_B = \sqrt{(v_B)_x{}^2 + (v_B)_y{}^2} = \sqrt{53.03^2 + 7.684^2} = 53.59 \text{ ft/s}$$

and the direction angle of $\mathbf{v}_B$ is

$$\theta = \tan^{-1}\left[\frac{(v_B)_y}{(v_B)_x}\right] = \tan^{-1}\left(\frac{7.684}{53.03}\right) = 8.244°$$

Conservation of Linear Momentum: Since no impulsive force acts on the marble along the inclined surface of the concrete wall (x' axis) during the impact, the linear momentum of the marble is conserved along the x' axis. Referring to Fig. *b,*

$$\left(+\nearrow\right) \qquad m_B(v'_B)_{x'} = m_B(v'_B)_{x'}$$

$$\frac{0.2}{32.2}\left(53.59 \sin 21.756°\right) = \frac{0.2}{32.2}\left(v'_B \cos \phi\right)$$

$$v'_B \cos \phi = 19.862 \qquad \textbf{(1)}$$

© 2010 Pearson Education, Inc., Upper Saddle River, NJ. All rights reserved. This material is protected under all copyright laws as they currently exist. No portion of this material may be reproduced, in any form or by any means, without permission in writing from the publisher.

15–78. Continued

Coefficient of Restitution: Since the concrete wall does not move during the impact, the coefficient of restitution can be written as

$$(+\nwarrow) \qquad e = \frac{0 - (v'_B)_{y'}}{(v'_B)_{y'} - 0}$$

$$0.5 = \frac{-v'_B \sin\phi}{-53.59 \cos 21.756^\circ}$$

$$v'_B \sin\phi = 24.885 \qquad \textbf{(2)}$$

Solving Eqs. (1) and (2) yields

$$v'_B = 31.8 \text{ ft/s} \qquad \textbf{Ans.}$$

$$\phi = 51.40^\circ$$

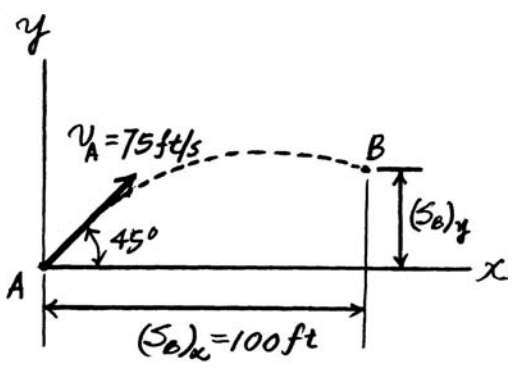

(a)

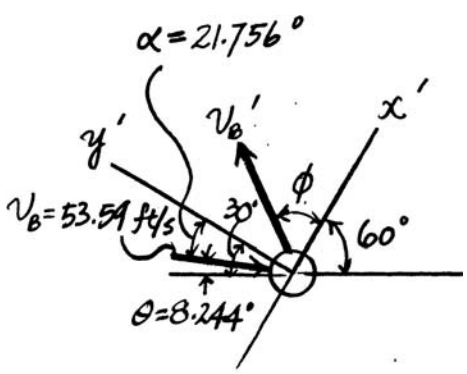

(b)

© 2010 Pearson Education, Inc., Upper Saddle River, NJ. All rights reserved. This material is protected under all copyright laws as they currently exist. No portion of this material may be reproduced, in any form or by any means, without permission in writing from the publisher.

15–79. The 2-kg ball is thrown so that it travels horizontally at 10 m/s when it strikes the 6-kg block as it is traveling down the inclined plane at 1 m/s. If the coefficient of restitution between the ball and the block is $e = 0.6$, determine the speeds of the ball and the block just after the impact. Also, what distance does B slide up the plane before it momentarily stops? The coefficient of kinetic friction between the block and the plane is $\mu_k = 0.4$.

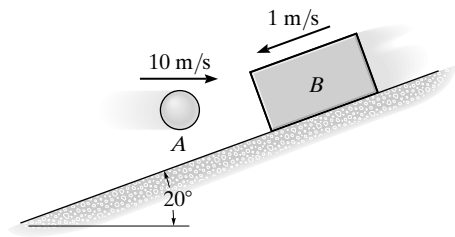

System:

$(+\nearrow)$ $\quad \Sigma m_1 v_1 = \Sigma m_2 v_2$

$$2(10\cos 20°) - 6(1) = 2(v_{A_x})_2 + 6(v_{B_x})_2$$

$$(v_{A_x})_2 + 3(v_{B_x})_2 = 6.3969$$

$(+\nearrow)$ $\quad e = \dfrac{(v_{B_x})_2 - (v_{A_x})_2}{(v_{A_x})_1 - v_{B_x})_1}: \qquad 0.6 = \dfrac{(v_{B_x})_2 - (v_{A_x})_2}{10\cos 20° - (-1)}$

$$(v_{B_x})_2 - (v_{A_x})_2 = 6.23816$$

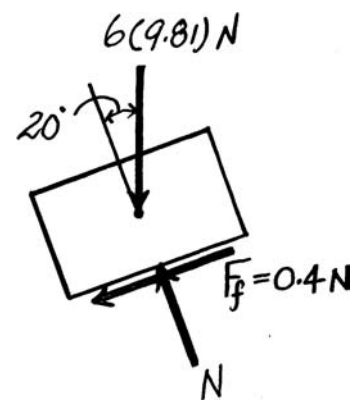

Solving:

$(v_{A_x})_2 = -3.0794$ m/s

$(v_{B_x})_2 = 3.1588$ m/s

Ball A:

$(+\nwarrow)$ $\quad m_A\left(v_{A_y}\right)_1 = m_A\left(v_{A_y}\right)_2$

$$m_A(-10\sin 20°) = m_A\left(v_{A_y}\right)_2$$

$$\left(v_{A_y}\right)_2 = -3.4202 \text{ m/s}$$

Thus,

$(v_A)_2 = \sqrt{(-3.0794)^2 + (-3.4202)^2} = 4.60$ m/s **Ans.**

$(v_B)_2 = 3.1588 = 3.16$ m/s **Ans.**

$+\nwarrow \Sigma F_y = 0; \qquad -6(9.81)\cos 20° + N = 0 \qquad N = 55.31$ N

$$T_1 + \Sigma U_{1-2} = T_2$$

$$\frac{1}{2}(6)(3.1588)^2 - 6(9.81)\sin 20° d - 0.4(55.31)d = 0$$

$d = 0.708$ m **Ans.**

© 2010 Pearson Education, Inc., Upper Saddle River, NJ. All rights reserved. This material is protected under all copyright laws as they currently exist. No portion of this material may be reproduced, in any form or by any means, without permission in writing from the publisher.

***15–80.** The 2-kg ball is thrown so that it travels horizontally at 10 m/s when it strikes the 6-kg block as it travels down the smooth inclined plane at 1 m/s. If the coefficient of restitution between the ball and the block is $e = 0.6$, and the impact occurs in 0.006 s, determine the average impulsive force between the ball and block.

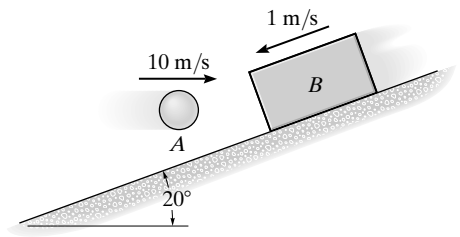

System:

$(+\nearrow)$ $\quad \Sigma m_1 v_1 = \Sigma m_2 v_2$

$$2(10\cos 20°) - 6(1) = 2(v_{A_x})_2 + 6(v_{B_x})_2$$

$$(v_{A_x})_2 + 3(v_{B_x})_2 = 6.3969$$

$(+\nearrow)$ $\quad e = \dfrac{(v_{B_x}) - (v_{A_x})_2}{(v_{A_x})_1 - (v_{B_x})_1}; \qquad 0.6 = \dfrac{(v_{B_x})_2 - (v_{A_x})_2}{10\cos 20° - (-1)}$

$$(v_{B_x})_2 - (v_{A_x})_2 = 6.23816$$

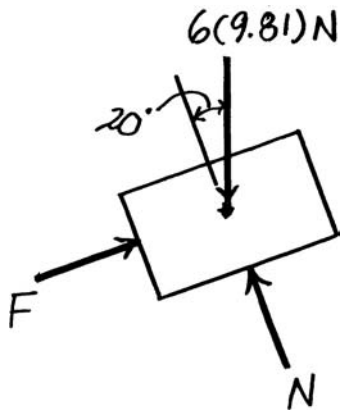

Solving:

$(v_{A_x})_2 = -3.0794$ m/s

$(v_{B_x})_2 = 3.1588$ m/s

Block B.

Neglect impulse of weight.

$(+\nearrow)$ $\quad mv_1 + \Sigma \int F\,dt = mv_2$

$$-6(1) + F(0.006) = 6(3.1588)$$

$F = 4.16$ kN **Ans.**

© 2010 Pearson Education, Inc., Upper Saddle River, NJ. All rights reserved. This material is protected under all copyright laws as they currently exist. No portion of this material may be reproduced, in any form or by any means, without permission in writing from the publisher.

•15–81. Two cars A and B each have a weight of 4000 lb and collide on the icy pavement of an intersection. The direction of motion of each car after collision is measured from snow tracks as shown. If the driver in car A states that he was going 44 ft/s (30 mi/h) just before collision and that after collision he applied the brakes so that his car skidded 10 ft before stopping, determine the approximate speed of car B just before the collision. Assume that the coefficient of kinetic friction between the car wheels and the pavement is $\mu_k = 0.15$. *Note:* The line of impact has not been defined; however, this information is not needed for the solution.

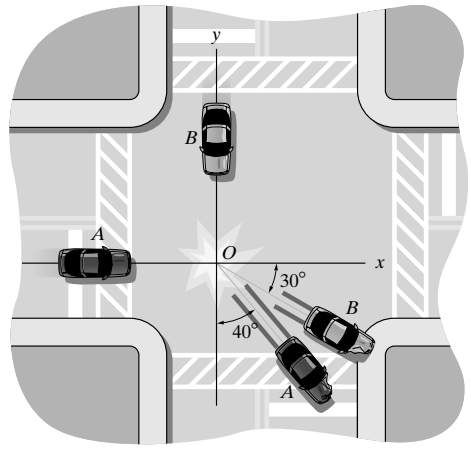

$$T_1 + \Sigma U_{1-2} = T_2$$

$$\frac{1}{2}\left(\frac{4000}{32.2}\right)(v_A)_2^2 - (0.15)(4000)(10) = 0$$

$$(v_A)_2 = 9.829 \text{ ft/s}$$

$$(v_A)_1 = 44 \text{ ft/s}$$

$$\left(\overset{+}{\rightarrow}\right) \qquad \Sigma m_1 (v_x)_1 = \Sigma m_2 (v_x)_2$$

$$\left(\frac{4000}{32.2}\right)(44) + 0 = \left(\frac{4000}{32.2}\right)(9.829)\sin 40° + \left(\frac{4000}{32.2}\right)(v_B)_2 \cos 30°$$

$$(v_B)_2 = 43.51 \text{ ft/s}$$

$$(+\uparrow) \qquad \Sigma m_1 (v_y)_1 = \Sigma m_2 (v_y)_2$$

$$0 - \left(\frac{4000}{32.2}\right)(v_B)_1 = -\left(\frac{4000}{32.2}\right)(9.829)\cos 40° - \left(\frac{4000}{32.2}\right)(43.51)\sin 30°$$

$$(v_B)_1 = 29.3 \text{ ft/s} \qquad \textbf{Ans.}$$

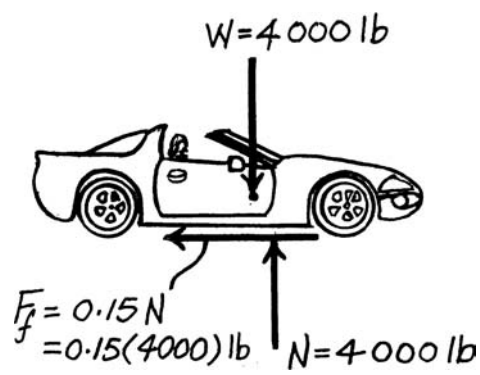

© 2010 Pearson Education, Inc., Upper Saddle River, NJ. All rights reserved. This material is protected under all copyright laws as they currently exist. No portion of this material may be reproduced, in any form or by any means, without permission in writing from the publisher.

15–82. The pool ball A travels with a velocity of 10 m/s just before it strikes ball B, which is at rest. If the masses of A and B are each 200 g, and the coefficient of restitution between them is $e = 0.8$, determine the velocity of both balls just after impact.

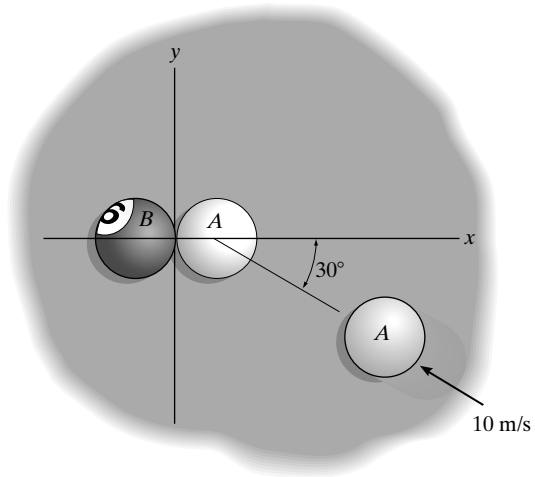

Conservation of Linear Momentum: By referring to the impulse and momentum of the system of billiard balls shown in Fig. *a*, notice that the linear momentum of the system is conserved along the n axis (line of impact). Thus,

$$\left(\overset{+}{\leftarrow}\right) \qquad m_A(v_A)_n + m_B(v_B)_n = m_A(v'_A)_n + m_B(v'_B)_n$$

$$0.2(10)\cos 30^\circ = 0.2v'_A \cos\theta_A + 0.2v'_B \cos\theta_B$$

$$v'_A \cos\theta_A + v'_B \cos\theta_B = 8.6603 \qquad \textbf{(1)}$$

Also, we notice that the linear momentum of each ball A and B is conserved along the t axis (tangent of plane impact). Thus,

$$\left(+\uparrow\right) \qquad m_A(v_A)_t = m_A(v'_A)_t$$

$$0.2(10)\sin 30^\circ = 0.2v'_A \sin\theta_A$$

$$v'_A \sin\theta_A = 5 \qquad \textbf{(2)}$$

and

$$\left(+\uparrow\right) \qquad m_B(v)_t = m_B(v'_B)_t$$

$$0 = 0.2v'_B \sin\theta_B$$

$$v'_B \sin\theta_B = 0$$

Since $v'_B \neq 0$, then $\sin\theta_B = 0$. Thus

$$\theta_B = 0$$

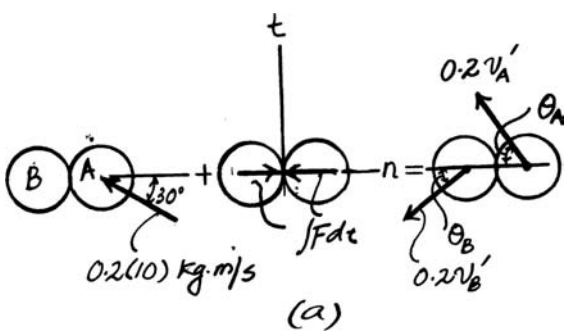

Coefficient of Restitution: The coefficient of restitution equation written along the n axis (line of impact) gives

$$\left(\overset{+}{\leftarrow}\right) \qquad e = \frac{(v'_B)_n - (v'_A)_n}{(v_A)_n - (v_B)_n}$$

$$0.8 = \frac{v'_B \cos\theta_B - v'_A \cos\theta_A}{10\cos 30^\circ - 0}$$

$$v'_B \cos\theta_B - v'_A \cos\theta_A = 6.928 \qquad \textbf{(3)}$$

Using the result of θ_B and solving Eqs. (1), (2), and (3),

$$v'_A = 5.07\text{m/s} \qquad \theta_A = 80.2^\circ \qquad \textbf{Ans.}$$

$$v'_B = 7.79\text{ m/s} \leftarrow \qquad \textbf{Ans.}$$

© 2010 Pearson Education, Inc., Upper Saddle River, NJ. All rights reserved. This material is protected under all copyright laws as they currently exist. No portion of this material may be reproduced, in any form or by any means, without permission in writing from the publisher.

15–83. Two coins A and B have the initial velocities shown just before they collide at point O. If they have weights of $W_A = 13.2(10^{-3})$ lb and $W_B = 6.60(10^{-3})$ lb and the surface upon which they slide is smooth, determine their speeds just after impact. The coefficient of restitution is $e = 0.65$.

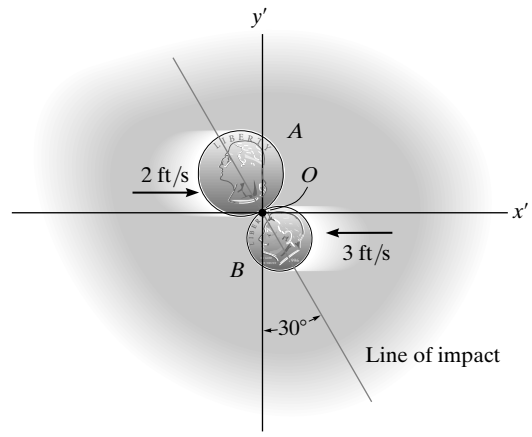

$$(+\searrow) \qquad m_A\left(v_{A_x}\right)_1 + m_B\left(v_{B_x}\right)_1 = m_A\left(v_{A_x}\right)_2 + m_B\left(v_{B_x}\right)_2$$

$$\left(\frac{13.2(10^{-3})}{32.2}\right)2\sin 30^\circ - \left(\frac{6.6(10^{-3})}{32.2}\right)3\sin 30^\circ$$

$$= \left(\frac{13.2(10^{-3})}{32.2}\right)(v_{A_x})_2 + \left(\frac{6.6(10^{-3})}{32.2}\right)(v_{B_x})_2$$

$$(+\searrow) \qquad e = \frac{(v_{B_x})_2 - (v_{A_x})_2}{(v_{A_x})_1 - (v_{B_x})_1} \qquad 0.65 = \frac{(v_{B_x})_2 - (v_{A_x})_2}{2\sin 30^\circ - (-3\sin 30^\circ)}$$

Solving:

$$(v_{A_x})_2 = -0.3750 \text{ ft/s}$$

$$(v_{B_x})_2 = 1.250 \text{ ft/s}$$

$$(+\nearrow) \qquad m_A\left(v_{A_y}\right)_2 = m_A\left(v_{A_y}\right)_2$$

$$\left(\frac{13.2(10^{-3})}{32.2}\right)2\cos 30^\circ = \left(\frac{13.2(10^{-3})}{32.2}\right)(v_{A_y})_2$$

$$(v_{A_y})_2 = 1.732 \text{ ft/s}$$

$$(+\swarrow) \qquad m_B\left(v_{B_y}\right)_1 = m_B\left(v_{B_y}\right)_2$$

$$\left(\frac{6.6(10^{-3})}{32.2}\right)3\cos 30^\circ = \left(\frac{6.6(10^{-3})}{32.2}\right)(v_{B_y})_2$$

$$(v_{B_y})_2 = 2.598 \text{ ft/s}$$

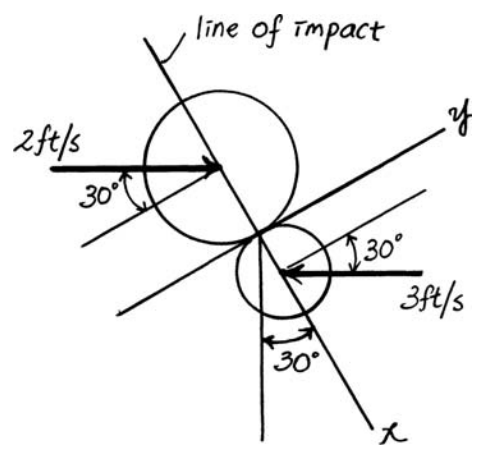

Thus:

$$(v_B)_2 = \sqrt{(1.250)^2 + (2.598)^2} = 2.88 \text{ ft/s} \qquad \textbf{Ans.}$$

$$(v_A)_2 = \sqrt{(-0.3750)^2 + (1.732)^2} = 1.77 \text{ ft/s} \qquad \textbf{Ans.}$$

© 2010 Pearson Education, Inc., Upper Saddle River, NJ. All rights reserved. This material is protected under all copyright laws as they currently exist. No portion of this material may be reproduced, in any form or by any means, without permission in writing from the publisher.

***15–84.** Two disks A and B weigh 2 lb and 5 lb, respectively. If they are sliding on the smooth horizontal plane with the velocities shown, determine their velocities just after impact. The coefficient of restitution between the disks is $e = 0.6$.

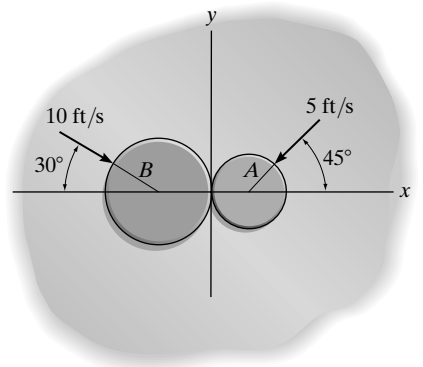

Conservation of Linear Momentum: By referring to the impulse and momentum of the system of disks shown in Fig. *a,* notice that the linear momentum of the system is conserved along the n axis (line of impact). Thus,

$$\left(\overset{+}{\rightarrow}\right) \qquad m_A(v_A)_n + m_B(v_B)_n = m_A(v'_A)_n + m_B(v'_B)_n$$

$$-\frac{2}{32.2}(5)\cos 45^\circ + \frac{5}{32.2}(10)\cos 30^\circ = \frac{2}{32.2}v'_A\cos\theta_A + \frac{5}{32.2}v'_B\cos\theta_B$$

$$2v'_A\cos\theta_A + 5v'_B\cos\theta_B = 36.23 \qquad \textbf{(1)}$$

Also, we notice that the linear momentum a of disks A and B are conserved along the t axis (tangent to the plane of impact). Thus,

$$\left(+\downarrow\right) \qquad m_A(v_A)_t = m_A(v'_A)_t$$

$$\frac{2}{32.2}(5)\sin 45^\circ = \frac{2}{32.2}v'_A\sin\theta_A$$

$$v'_A\sin\theta_A = 3.5355 \qquad \textbf{(2)}$$

and

$$\left(+\downarrow\right) \qquad m_B(v_B)_t = m_B(v'_B)_t$$

$$\frac{2}{32.2}(10)\sin 30^\circ = \ = \frac{2}{32.2}v'_B\sin\theta_B$$

$$v'_B\sin\theta_B = 5 \qquad \textbf{(3)}$$

Coefficient of Restitution: The coefficient of restitution equation written along the n axis (line of impact) gives

$$\left(\overset{+}{\rightarrow}\right) \qquad e = \frac{(v'_A)_n - (v'_B)_n}{(v_B)_n - (v_A)_n}$$

$$0.6 = \frac{v'_A\cos\theta_A - v'_B\cos\theta_B}{10\cos 30^\circ - \left(-5\cos 45^\circ\right)}$$

$$v'_A\cos\theta_A - v'_B\cos\theta_B = 7.317 \qquad \textbf{(4)}$$

Solving Eqs. (1), (2), (3), and (4), yields

$v'_A = 11.0$ ft/s $\qquad \theta_A = 18.8^\circ$ **Ans.**

$v'_B = 5.88$ ft/s $\qquad \theta_B = 58.3^\circ$ **Ans.**

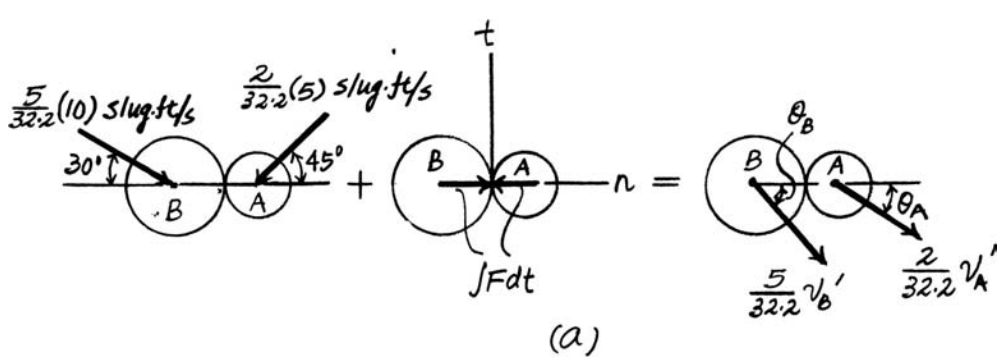

(a)

© 2010 Pearson Education, Inc., Upper Saddle River, NJ. All rights reserved. This material is protected under all copyright laws as they currently exist. No portion of this material may be reproduced, in any form or by any means, without permission in writing from the publisher.

•15–85. Disks A and B have a mass of 15 kg and 10 kg, respectively. If they are sliding on a smooth horizontal plane with the velocities shown, determine their speeds just after impact. The coefficient of restitution between them is $e = 0.8$.

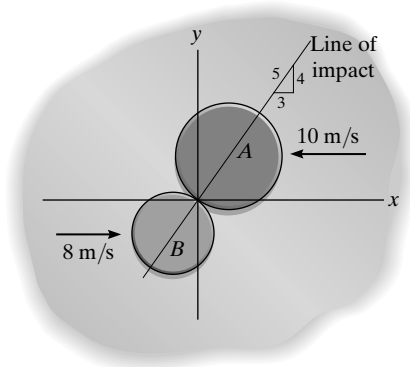

Conservation of Linear Momentum: By referring to the impulse and momentum of the system of disks shown in Fig. a, notice that the linear momentum of the system is conserved along the n axis (line of impact). Thus,

$$+\nearrow\ m_A(v_A)_n + m_B(v_B)_n = m_A(v'_A)_n + m_B(v'_B)_n$$

$$15(10)\left(\frac{3}{5}\right) - 10(8)\left(\frac{3}{5}\right) = 15v'_A\cos\phi_A + 10v'_B\cos\phi_B$$

$$15v'_A\cos\phi_A + 10v'_B\cos\phi_B = 42 \qquad \textbf{(1)}$$

Also, we notice that the linear momentum of disks A and B are conserved along the t axis (tangent to? plane of impact). Thus,

$$+\nwarrow\ m_A(v_A)_t = m_A(v'_A)_t$$

$$15(10)\left(\frac{4}{5}\right) = 15v'_A\sin\phi_A$$

$$v'_A\sin\phi_A = 8 \qquad \textbf{(2)}$$

and

$$+\nwarrow\ m_B(v_B)_t = m_B(v'_B)_t$$

$$10(8)\left(\frac{4}{5}\right) = 10\,v'_B\sin\phi_B$$

$$v'_B\sin\phi_B = 6.4 \qquad \textbf{(3)}$$

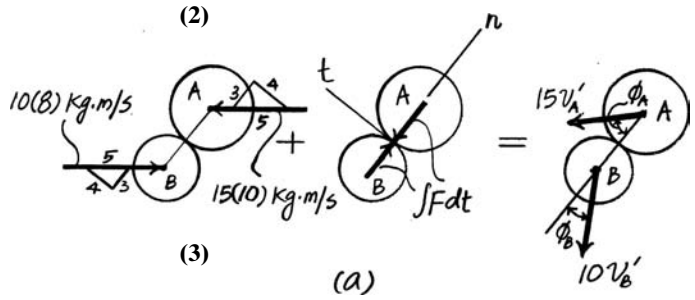

Coefficient of Restitution: The coefficient of restitution equation written along the n axis (line of impact) gives

$$+\nearrow\ e = \frac{(v'_B)_n - (v'_A)_n}{(v_A)_n - (v_B)_n}$$

$$0.8 = \frac{v'_B\cos\phi_B - v'_A\cos\phi_A}{10\left(\frac{3}{5}\right) - \left[-8\left(\frac{3}{5}\right)\right]}$$

$$v'_B\cos\phi_B - v'_A\cos\phi_A = 8.64 \qquad \textbf{(4)}$$

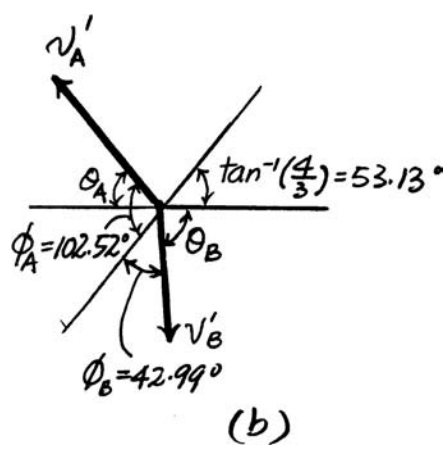

Solving Eqs. (1), (2), (3), and (4), yeilds

$v'_A = 8.19$ m/s **Ans.**

$\phi_A = 102.52°$

$v'_B = 9.38$ m/s **Ans.**

$\phi_B = 42.99°$

© 2010 Pearson Education, Inc., Upper Saddle River, NJ. All rights reserved. This material is protected under all copyright laws as they currently exist. No portion of this material may be reproduced, in any form or by any means, without permission in writing from the publisher.

15–86. Disks A and B have a mass of 6 kg and 4 kg, respectively. If they are sliding on the smooth horizontal plane with the velocities shown, determine their speeds just after impact. The coefficient of restitution between the disks is $e = 0.6$.

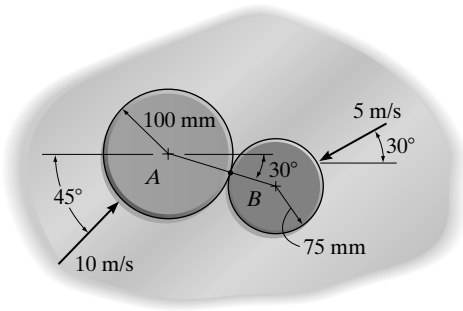

Conservation of Linear Momentum: The orientation of the line of impact (n axis) and the tangent of the plane of contact (t axis) are shownn in Fig. *a.* By referring to the impulse and momentum of the system of disks shown in Fig. *b,* we notice that the linear momentum of the system is conserved along the n axis. Thus,

$$(\searrow +) \qquad m_A(v_A)_n + m_B(v_B)_n = m_A(v'_A)_n + m_B(v'_B)_n$$

$$-6(10)\cos 75^\circ + 4(5)\cos 60^\circ = 6(v'_A \cos\phi_A) - 4(v'_B \cos\phi_B)$$

$$4v'_A \cos\phi_A - 6v'_B \cos\phi_B = 5.529 \qquad \textbf{(1)}$$

Also, we notice that the linear momentum of disks A and B are conserved along the t axis. Thus,

$$(+\nearrow) \qquad m_A(v_A)_t = m_A(v'_A)_t$$

$$6(10)\sin 75^\circ = 6\,v'_A \sin\phi_A$$

$$v'_A \sin\phi_A = 9.659 \qquad \textbf{(2)}$$

and

$$(+\nearrow) \qquad m_B(v_B)_t = m_B(v'_B)_t$$

$$4(5)\sin 60^\circ = 4\,v'_B \sin\phi_B$$

$$v'_B \sin\phi_B = 4.330 \qquad \textbf{(3)}$$

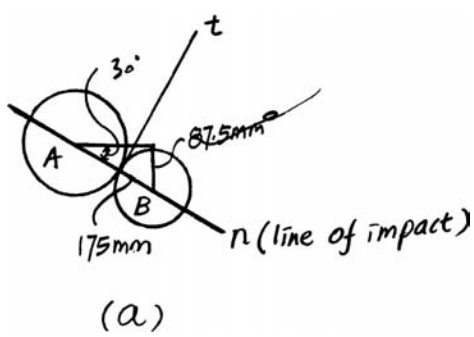

Coefficient of Restitution: The coefficient of restitution equation written along the n axis (line of impact) gives

$$(\searrow +) \qquad e = \frac{(v'_B)_n - (v'_A)_n}{(v_A)_n - (v_B)_n}$$

$$0.6 = \frac{-v'_B \cos\phi_B - v'_A \cos\phi_A}{-10\cos 75^\circ - 5\cos 60^\circ}$$

$$v'_B \cos\phi_B + v'_A \cos\phi_A = 3.053 \qquad \textbf{(4)}$$

Solving Eqs. (1), (2), (3), and (4), yields

$v'_A = 9.68$ m/s **Ans.**

$\phi_A = 86.04^\circ$

$v'_B = 4.94$ m/s **Ans.**

$\phi_B = 61.16^\circ$

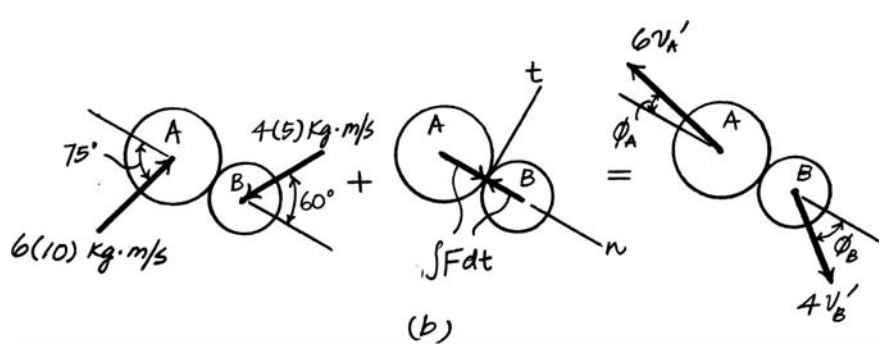

© 2010 Pearson Education, Inc., Upper Saddle River, NJ. All rights reserved. This material is protected under all copyright laws as they currently exist. No portion of this material may be reproduced, in any form or by any means, without permission in writing from the publisher.

15–87. Disks A and B weigh 8 lb and 2 lb, respectively. If they are sliding on the smooth horizontal plane with the velocities shown, determine their speeds just after impact. The coefficient of restitution between them is $e = 0.5$.

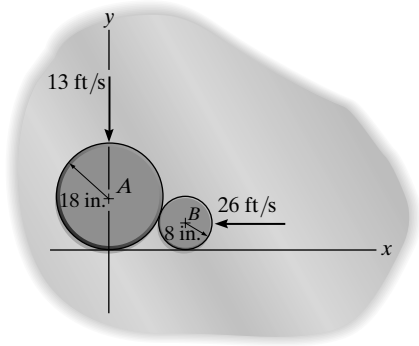

Conservation of Linear Momentum: The orientation of the line of impact (n axis) and the tangent of the plane of contact, (t axis) are shown in Fig. a. By referring to the impulse and momentum of the system of disks shown in Fig. b, notice that the linear momentum of the system is conserved along the n axis. Thus,

$$m_A(v_A)_n + m_B(v_B)_n = m_A(v'_A)_n + m_B(v'_B)_n$$

$$-\frac{8}{32.2}(13)\left(\frac{5}{13}\right) + \frac{2}{32.2}(26)\left(\frac{12}{13}\right) = \frac{8}{32.2}(v'_A\cos\phi_A) - \frac{2}{32.2}(v'_B\cos\phi_B)$$

$$8v'_A\cos\phi_A - 2v'_B\cos\phi_B = 8 \qquad \textbf{(1)}$$

Also, we notice that the linear momentum of disks A and B are conserved along the t axis. Thus,

$$m_A(v_A)_t = m_A(v'_A)_t$$

$$\frac{8}{32.2}(13)\left(\frac{12}{13}\right) = \frac{8}{32.2}v'_A\sin\phi_A$$

$$v'_B\sin\phi_A = 12 \qquad \textbf{(2)}$$

and

$$m_B(v_B)_t = m_B(v'_B)_t$$

$$\frac{2}{32.2}(26)\left(\frac{5}{13}\right) = \frac{2}{32.2}v'_B\sin\phi_B$$

$$v'_B\sin\phi_B = 10 \qquad \textbf{(3)}$$

Coefficient of Restitution: The coefficient of restitution equation written along the n axis (line of impact) gives

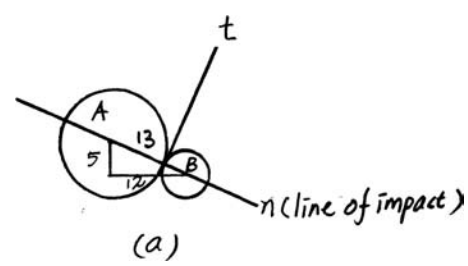

$$e = \frac{(v'_B)_n - (v'_A)_n}{(v_A)_n - (v_A)_n}$$

$$0.5 = \frac{-v'_B\cos\phi_B - v'_A\cos\phi_A}{-13\left(\frac{5}{13}\right) - 26\left(\frac{12}{13}\right)}$$

$$v'_A\cos\phi_A + v'_B\cos\phi_B = 14.5 \qquad \textbf{(4)}$$

Solving Eqs. (1), (2), (3), and (4), yields

$v'_A = 12.6$ ft/s **Ans.**

$\phi_A = 72.86°$

$v'_B = 14.7$ ft/s **Ans.**

$\phi_B = 42.80°$

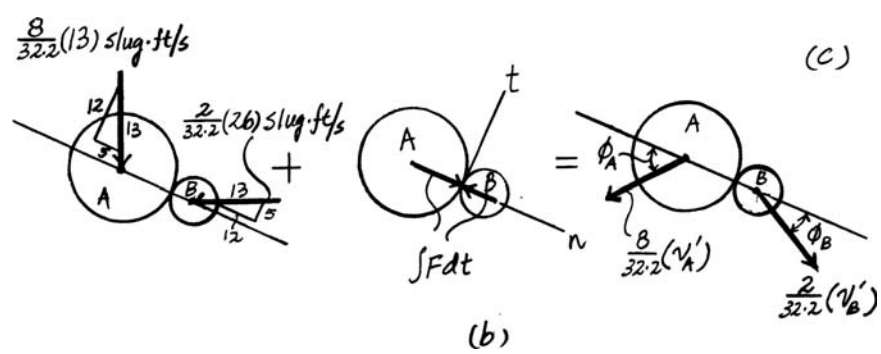

© 2010 Pearson Education, Inc., Upper Saddle River, NJ. All rights reserved. This material is protected under all copyright laws as they currently exist. No portion of this material may be reproduced, in any form or by any means, without permission in writing from the publisher.

***15–88.** Ball A strikes ball B with an initial velocity of $(\mathbf{v}_A)_1$ as shown. If both balls have the same mass and the collision is perfectly elastic, determine the angle θ after collision. Ball B is originally at rest. Neglect the size of each ball.

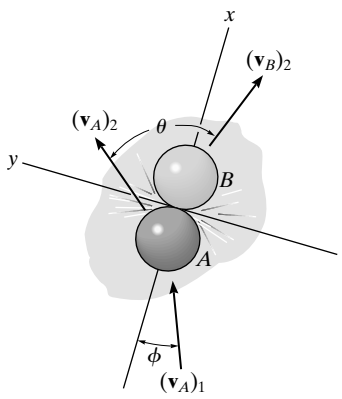

Velocity before impact:

$$(v_{Ax})_1 = (v_A)_1 \cos\phi \qquad (v_{Ay})_1 = (v_A)_1 \sin\phi$$

$$(v_{Bx})_1 = 0 \qquad (v_{By})_1 = 0$$

Velocity after impact

$$(v_{Ax})_2 = (v_A)_2 \cos\theta_1 \qquad (v_{Ay})_2 = (v_A)_2 \sin\theta_1$$

$$(v_{Bx})_2 = (v_B)_2 \cos\theta_2 \qquad (v_{By})_2 = -(v_B)_2 \sin\theta_2$$

Conservation of "y" momentum:

$$m_B\,(v_{By})_1 = m_B\,(v_{By})_2$$

$$0 = m\left[-(v_\theta)_2 \sin\theta_2\right] \qquad \theta_2 = 0°$$

Conservation of "x" momentum:

$$m_A\,(v_{Ax})_1 + m_B\,(v_{Bx})_1 = m_A\,(v_{Ax})_2 + m_B\,(v_{Bx})_2$$

$$m\,(v_A)_1 \cos\phi + 0 = m\,(v_A)_2 \cos\theta_1 + m\,(v_B)_2 \cos 0°$$

$$(v_A)_1 \cos\phi = (v_A)_2 \cos\theta_1 + (v_B)_2 \qquad \textbf{(1)}$$

Coefficient of Restitution (x direction):

$$e = \frac{(v_{Bx})_2 - (v_{Ax})_2}{(v_{Ax})_1 - (v_{Bx})_1}\ ; \qquad 1 = \frac{(v_B)_2 \cos 0° - (v_A)_2 \cos\theta_1}{(v_A)_1 \cos\phi - 0}$$

$$(v_A)_1 \cos\phi = -(v_A)_2 \cos\theta_1 + (v_B)_2 \qquad \textbf{(2)}$$

Subtracting Eq. (1) from Eq. (2) yields:

$$2\,(v_A)_2 \cos\theta_1 = 0 \qquad \text{Since } 2(v_A)_2 \neq 0$$

$$\cos\theta_1 = 0 \qquad \theta_1 = 90°$$

$$\theta = \theta_1 + \theta_2 = 90° + 0° = 90° \qquad \textbf{Ans.}$$

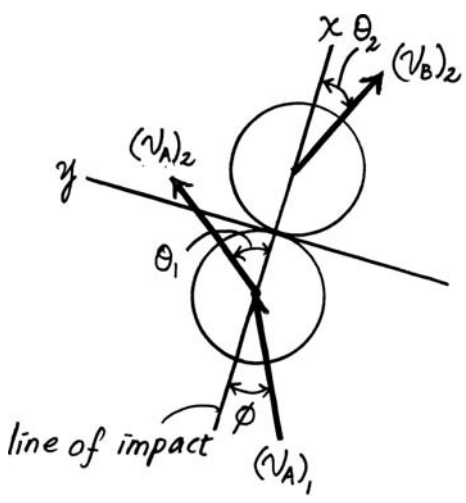

© 2010 Pearson Education, Inc., Upper Saddle River, NJ. All rights reserved. This material is protected under all copyright laws as they currently exist. No portion of this material may be reproduced, in any form or by any means, without permission in writing from the publisher.

•15–89. Two disks A and B each have a weight of 2 lb and the initial velocities shown just before they collide. If the coefficient of restitution is $e = 0.5$, determine their speeds just after impact.

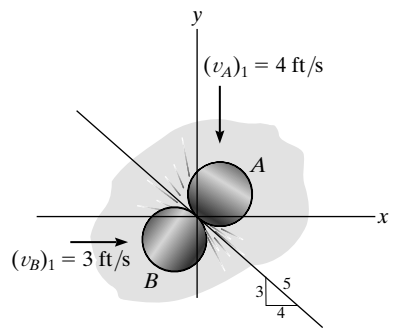

System:

$(+\nearrow)$ $\quad \Sigma\, mv_{1x} = \Sigma mv_{2x}$

$$\frac{2}{32.2}(3)\left(\frac{3}{5}\right) - \frac{2}{32.2}(4)\left(\frac{4}{5}\right) = \frac{2}{32.2}(v_B)_{2x} + \frac{2}{32.2}(v_A)_{2x}$$

$(+\nearrow)$ $\quad e = \dfrac{(v_{Ax})_2 - (v_{Bx})_2}{(v_{Bx})_1 - (v_{Ax})_1}\ ; \qquad 0.5 = \dfrac{(v_{Ax})_2 - (v_{Bx})_2}{3\left(\frac{3}{5}\right) - \left[-4\left(\frac{4}{5}\right)\right]}$

Solving,

$(v_{A\,x})_2 = 0.550$ ft/s

$(v_{Bx})_2 = -1.95$ ft/s $= 1.95$ ft/s $\leftarrow$

Ball A:

$(+\nwarrow)$ $\quad m_A\left(v_{Ay}\right)_1 = m_A\left(v_{Ay}\right)_2$

$$-\frac{2}{32.2}(4)\left(\frac{3}{5}\right) = \frac{2}{32.2}\left(v_{Ay}\right)_2$$

$$\left(v_{Ay}\right)_2 = -2.40 \text{ ft/s}$$

Ball B:

$(+\nwarrow)$ $\quad m_B\left(v_{By}\right)_1 = m_B\left(v_{By}\right)_2$

$$-\frac{2}{32.2}(3)\left(\frac{4}{5}\right) = \frac{2}{32.2}\left(v_{By}\right)_2$$

$$(v_{B_y})_2 = -2.40 \text{ ft/s}$$

Thus,

$(v_A)_2 = \sqrt{(0.550)^2 + (2.40)^2} = 2.46$ ft/s **Ans.**

$(v_B)_2 = \sqrt{(1.95)^2 + (2.40)^2} = 3.09$ ft/s **Ans.**

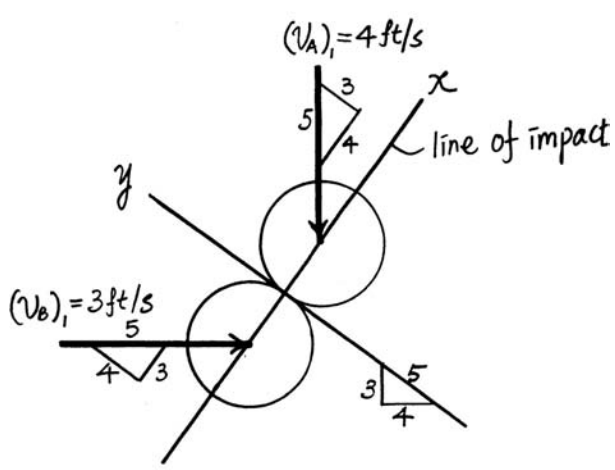

© 2010 Pearson Education, Inc., Upper Saddle River, NJ. All rights reserved. This material is protected under all copyright laws as they currently exist. No portion of this material may be reproduced, in any form or by any means, without permission in writing from the publisher.

15–90. The spheres A and B each weighing 4 lb, are welded to the light rods that are rigidly connected to a shaft as shown. If the shaft is subjected to a couple moment of $M = (4t^2 + 2)$ lb · ft, where t is in seconds, determine the speed of A and B when $t = 3$ s. The system starts from rest. Neglect the size of the spheres.

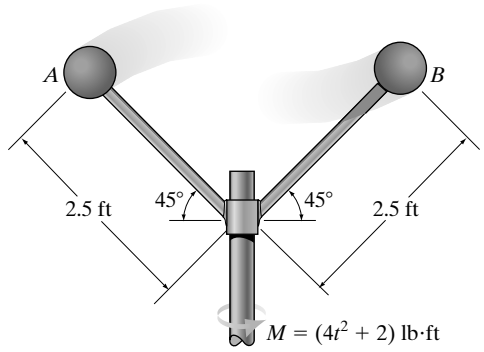

Free-Body Diagram: The free-body diagram of the system is shown in Fig. *a*. Since the moment reaction $\mathbf{M}_C$ has no component about the z axis, the force reaction $\mathbf{F}_C$ acts through the z axis, and the line of action of $\mathbf{W}_A$ and $\mathbf{W}_B$ are parallel to the z axis, they produce no angular impulse about the z axis.

Principle of Angular Impulse and Momentum:

$$(H_1)_z + \Sigma \int_{t_2}^{t_1} M_z\, dt = (H_2)$$

$$0 + \int_0^{3\text{ s}} (4t^2 + 2)dt = 2\left(\frac{4}{32.2}(v)(2.5\cos 45°)\right)$$

$$\frac{4t^3}{3} + 2t\Big|_0^{3\text{ s}} = 0.4392\, v$$

$v = 95.6$ ft/s **Ans.**

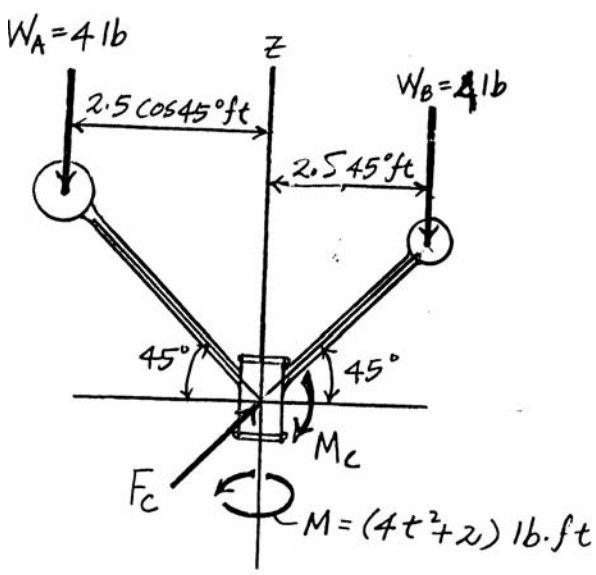

(a)

© 2010 Pearson Education, Inc., Upper Saddle River, NJ. All rights reserved. This material is protected under all copyright laws as they currently exist. No portion of this material may be reproduced, in any form or by any means, without permission in writing from the publisher.

15–91. If the rod of negligible mass is subjected to a couple moment of $M = (30t^2)$ N·m and the engine of the car supplies a traction force of $F = (15t)$ N to the wheels, where t is in seconds, determine the speed of the car at the instant $t = 5$ s. The car starts from rest. The total mass of the car and rider is 150 kg. Neglect the size of the car.

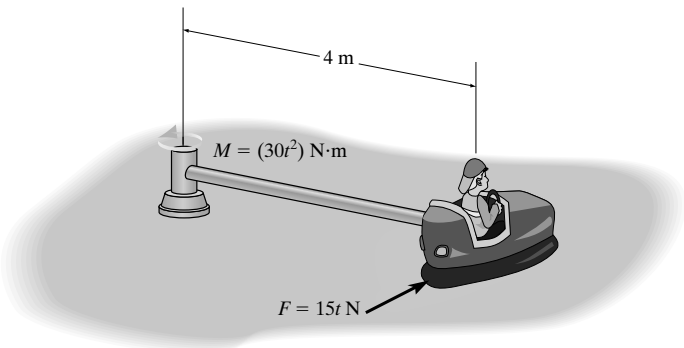

Free-Body Diagram: The free-body diagram of the system is shown in Fig. *a*. Since the moment reaction $\mathbf{M}_S$ has no component about the z axis, the force reaction $\mathbf{F}_S$ acts through the z axis, and the line of action of **W** and **N** are parallel to the z axis, they produce no angular impulse about the z axis.

Principle of Angular Impulse and Momentum:

$$(H_1)_z + \Sigma \int_{t_2}^{t_1} M_z\, dt = (H_2)_z$$

$$0 + \int_0^{5\text{ s}} 30t^2\, dt + \int_0^{5\text{ s}} 15t(4)dt = 150v(4)$$

$v = 3.33$ m/s **Ans.**

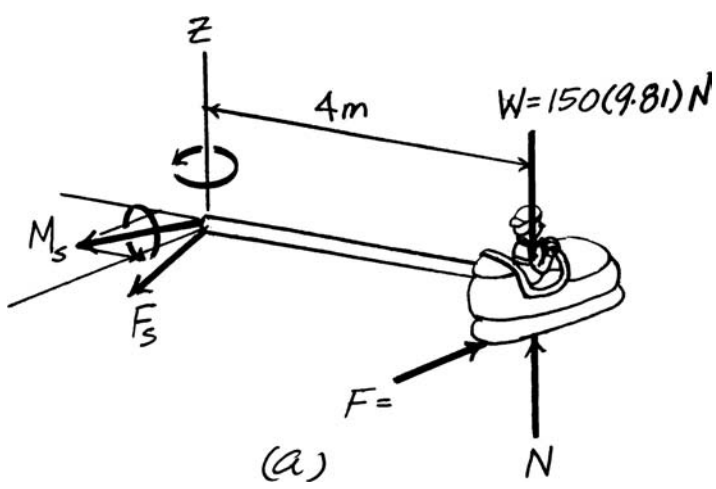

© 2010 Pearson Education, Inc., Upper Saddle River, NJ. All rights reserved. This material is protected under all copyright laws as they currently exist. No portion of this material may be reproduced, in any form or by any means, without permission in writing from the publisher.

15–92. The 10-lb block rests on a surface for which $\mu_k = 0.5$. It is acted upon by a radial force of 2 lb and a horizontal force of 7 lb, always directed at 30° from the tangent to the path as shown. If the block is initially moving in a circular path with a speed $v_1 = 2$ ft/s at the instant the forces are applied, determine the time required before the tension in cord AB becomes 20 lb. Neglect the size of the block for the calculation.

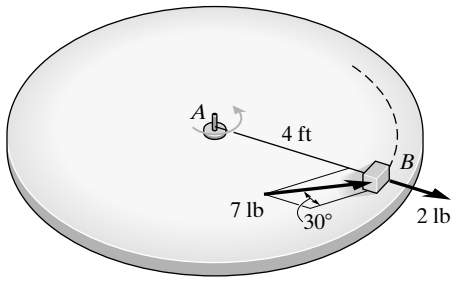

$\Sigma F_n = ma_n$;

$$20 - 7\sin 30° - 2 = \frac{10}{32.2}\left(\frac{v^2}{4}\right)$$

$v = 13.67$ ft/s

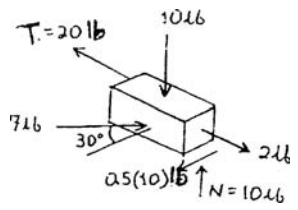

$$(H_A)_t + \Sigma \int M_A\, dt = (H_A)_2$$

$$\left(\frac{10}{32.2}\right)(2)(4) + (7\cos 30°)(4)(t) - 0.5(10)(4)\,t = \frac{10}{32.2}(13.67)(4)$$

$t = 3.41$ s **Ans.**

15–93. The 10-lb block is originally at rest on the smooth surface. It is acted upon by a radial force of 2 lb and a horizontal force of 7 lb, always directed at 30° from the tangent to the path as shown. Determine the time required to break the cord, which requires a tension $T = 30$ lb. What is the speed of the block when this occurs? Neglect the size of the block for the calculation.

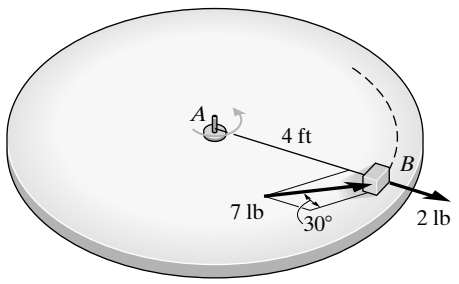

$\Sigma F_n = ma_n$;

$$30 - 7\sin 30° - 2 = \frac{10}{32.2}\left(\frac{v^2}{4}\right)$$

$v = 17.764$ ft/s

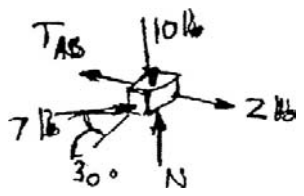

$$(H_A)_1 + \Sigma \int M_A\, dt = (H_A)_2$$

$$0 + (7\cos 30°)(4)(t) = \frac{10}{32.2}(17.764)(4)$$

$t = 0.910$ s **Ans.**

© 2010 Pearson Education, Inc., Upper Saddle River, NJ. All rights reserved. This material is protected under all copyright laws as they currently exist. No portion of this material may be reproduced, in any form or by any means, without permission in writing from the publisher.

15–94. The projectile having a mass of 3 kg is fired from a cannon with a muzzle velocity of $v_0 = 500\,\text{m/s}$. Determine the projectile's angular momentum about point O at the instant it is at the maximum height of its trajectory.

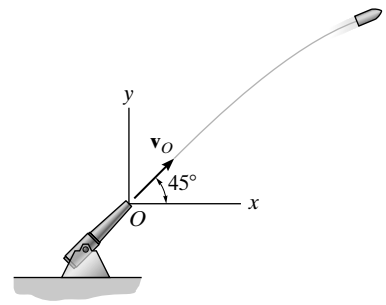

At the maximum height, the projectile travels with a horizontal speed of $v = v_x = 500\cos 45° = 353.6\ \text{m/s}^2$.

$(+\uparrow)\qquad v_y^2 = (v_0)_y^2 + 2a_c\left[s_y - (s_0)_y\right]$

$$0 = (500\sin 45°)^2 + 2(-9.81)\left[(s_y)_{max} - 0\right]$$

$$(s_y)_{max} = 6371\ \text{m}$$

$H_O = (d)(mv) = 6371(3)(353.6) = 6.76(10^6)\ \text{kg}\cdot\text{m}^2/\text{s}$ **Ans.**

15–95. The 3-lb ball located at A is released from rest and travels down the curved path. If the ball exerts a normal force of 5 lb on the path when it reaches point B, determine the angular momentum of the ball about the center of curvature, point O. *Hint:* Neglect the size of the ball. The radius of curvature at point B must first be determined.

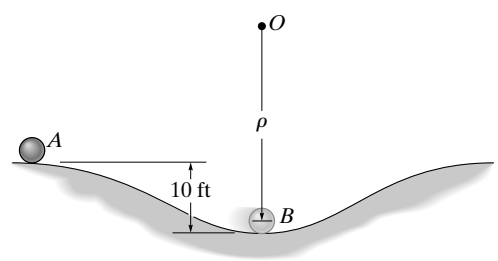

Datum at B:

$T_1 + V_1 = T_2 + V_2$

$$0 + 3(10) = \frac{1}{2}\left(\frac{3}{32.2}\right)(v_B)^2 + 0$$

$v_B = 25.38\ \text{ft/s}$

$(+\uparrow)\Sigma F_n = ma_n;\qquad 5 - 3 = \left(\frac{3}{32.2}\right)\left(\frac{(25.38)^2}{\rho}\right)$

$$\rho = 30\ \text{ft}$$

$H_B = 30\left(\frac{3}{32.2}\right)(25.38) = 70.9\ \text{slug}\cdot\text{ft}^2/\text{s}$ **Ans.**

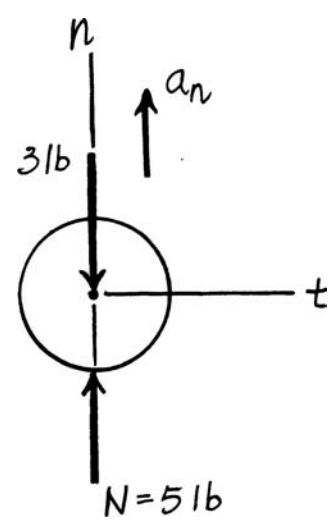

© 2010 Pearson Education, Inc., Upper Saddle River, NJ. All rights reserved. This material is protected under all copyright laws as they currently exist. No portion of this material may be reproduced, in any form or by any means, without permission in writing from the publisher.

***15–96.** The ball B has a mass of 10 kg and is attached to the end of a rod whose mass can be neglected. If the shaft is subjected to a torque $M = (2t^2 + 4)\ \mathrm{N \cdot m}$, where t is in seconds, determine the speed of the ball when $t = 2$ s. The ball has a speed $v = 2$ m/s when $t = 0$.

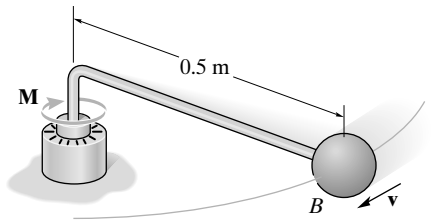

Principle of Angular Impluse and Momentum: Applying Eq. 15–22, we have

$$(H_z)_1 + \Sigma \int_{t_1}^{t_2} M_z\, dt = (H_z)_2$$

$$0.5(10)(2) + \int_0^{2\,\mathrm{s}} \left(2\,t^2 + 4\right) dt = 0.5(10)\, v$$

$$v = 4.67\ \mathrm{m/s} \qquad \textbf{Ans.}$$

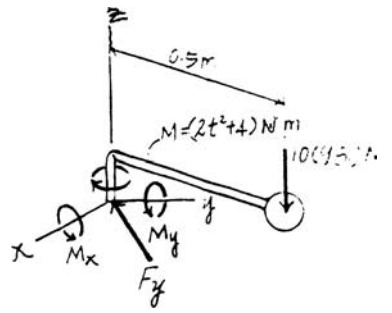

•15–97. The two spheres each have a mass of 3 kg and are attached to the rod of negligible mass. If a torque $M = (6e^{0.2t})\ \mathrm{N \cdot m}$, where t is in seconds, is applied to the rod as shown, determine the speed of each of the spheres in 2 s, starting from rest.

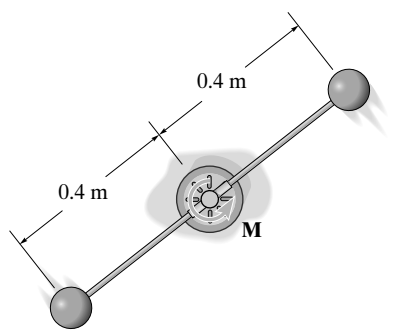

Principle of Angular Impluse and Momentum: Applying Eq. 15–22, we have

$$(H_z)_1 + \Sigma \int_{t_1}^{t_2} M_z\, dt = (H_z)_2$$

$$2[0.4\,(3)\,(0)] + \int_0^{2\,\mathrm{s}} \left(6e^{0.2\,t}\right)\, dt = 2\,[0.4\,(3)\,v]$$

$$v = 6.15\ \mathrm{m/s} \qquad \textbf{Ans.}$$

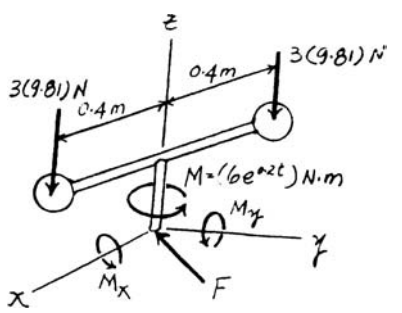

© 2010 Pearson Education, Inc., Upper Saddle River, NJ. All rights reserved. This material is protected under all copyright laws as they currently exist. No portion of this material may be reproduced, in any form or by any means, without permission in writing from the publisher.

15–98. The two spheres each have a mass of 3 kg and are attached to the rod of negligible mass. Determine the time the torque $M = (8t)$ N · m, where t is in seconds, must be applied to the rod so that each sphere attains a speed of 3 m/s starting from rest.

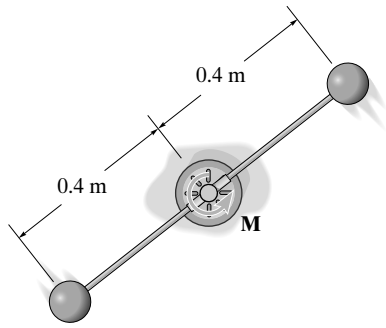

Principle of Angular Impluse and Momentum: Applying Eq. 15–22, we have

$$(H_z)_1 + \Sigma \int_{t_1}^{t_2} M_z\, dt = (H_z)_2$$

$$2[0.4\,(3)\,(0)] + \int_0^t (8t)\, dt = 2[0.4\,(3)\,(3)]$$

$$t = 1.34 \text{ s} \qquad \textbf{Ans.}$$

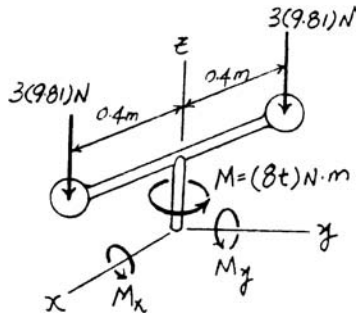

15–99. An amusement park ride consists of a car which is attached to the cable OA. The car rotates in a horizontal circular path and is brought to a speed $v_1 = 4$ ft/s when $r = 12$ ft. The cable is then pulled in at the constant rate of 0.5 ft/s. Determine the speed of the car in 3 s.

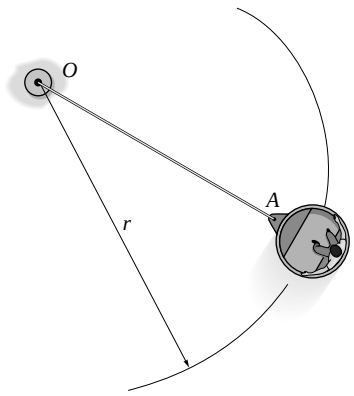

Conservation of Angular Momentum: Cable OA is shorten by $\Delta r = 0.5(3) = 1.50$ ft. Thus, at this instant $r_2 = 12 - 1.50 = 10.5$ ft. Since no force acts on the car along the tangent of the moving path, the angular momentum is conserved about point O. Applying Eq. 15–23, we have

$$(\mathbf{H}_O)_1 = (\mathbf{H}_O)_2$$

$$r_1\, mv_1 = r_2\, mv'$$

$$12(m)(4) = 10.5(m)\, v'$$

$$v' = 4.571 \text{ ft/s}$$

The speed of car after 3 s is

$$v_2 = \sqrt{0.5^2 + 4.571^2} = 4.60 \text{ ft/s} \qquad \textbf{Ans.}$$

© 2010 Pearson Education, Inc., Upper Saddle River, NJ. All rights reserved. This material is protected under all copyright laws as they currently exist. No portion of this material may be reproduced, in any form or by any means, without permission in writing from the publisher.

***15–100.** An earth satellite of mass 700 kg is launched into a free-flight trajectory about the earth with an initial speed of $v_A = 10$ km/s when the distance from the center of the earth is $r_A = 15$ Mm. If the launch angle at this position is $\phi_A = 70°$, determine the speed v_B of the satellite and its closest distance r_B from the center of the earth. The earth has a mass $M_e = 5.976(10^{24})$ kg. *Hint:* Under these conditions, the satellite is subjected only to the earth's gravitational force, $F = GM_e m_s/r^2$, Eq. 13–1. For part of the solution, use the conservation of energy.

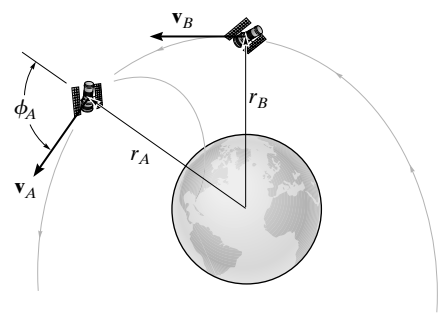

$$(H_O)_1 = (H_O)_2$$

$$m_s(v_A \sin\phi_A)r_A = m_s(v_B)r_B$$

$$700[10(10^3)\sin 70°](15)(10^6) = 700(v_B)(r_B) \qquad \textbf{(1)}$$

$$T_A + V_A = T_B + V_B$$

$$\frac{1}{2}m_s(v_A)^2 - \frac{GM_e m_s}{r_A} = \frac{1}{2}m_s(v_B)^2 - \frac{GM_e m_s}{r_B}$$

$$\frac{1}{2}(700)[10(10^3)]^2 - \frac{66.73(10^{-12})(5.976)(10^{24})(700)}{[15(10^6)]} = \frac{1}{2}(700)(v_B)^2 - \frac{66.73(10^{-12})(5.976)(10^{24})(700)}{r_B} \qquad \textbf{(2)}$$

Solving,

$v_\theta = 10.2$ km/s **Ans.**

$r_\theta = 13.8$ Mm **Ans.**

© 2010 Pearson Education, Inc., Upper Saddle River, NJ. All rights reserved. This material is protected under all copyright laws as they currently exist. No portion of this material may be reproduced, in any form or by any means, without permission in writing from the publisher.

•15–101. The 2-kg ball rotates around a 0.5-m-diameter circular path with a constant speed. If the cord length is shortened from $l = 1$ m to $l' = 0.5$ m, by pulling the cord through the tube, determine the new diameter of the path d'. Also, what is the tension in the cord in each case?

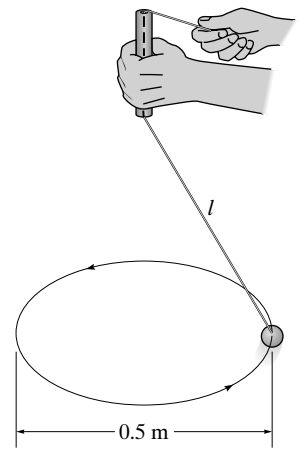

Equation of Motion: When the ball is travelling around the 0.5 m diameter circular path, $\cos\theta = \frac{0.25}{1} = 0.25$ and $\sin\theta = \frac{\sqrt{0.9375}}{1} = \sqrt{0.9375}$. Applying Eq. 13–8, we have

$$\Sigma F_b = 0; \qquad T_1\left(\sqrt{0.9375}\right) - 2(9.81) = 0$$

$$T_1 = 20.26 \text{ N} = 20.3 \text{ N} \qquad \textbf{Ans.}$$

$$\Sigma F_n = ma_n; \qquad 20.26(0.25) = 2\left(\frac{v_1^2}{0.25}\right)$$

$$v_1 = 0.7958 \text{ m/s}$$

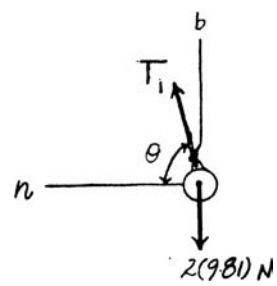

When the ball is travelling around d' the diameter circular path, $\cos\phi = \frac{d'/2}{0.5} = d'$ and $\sin\phi = \frac{\sqrt{0.25 - 0.25\,d'^2}}{0.5} = \sqrt{1 - d'^2}$. Applying Eq. 13–8, we have

$$\Sigma F_b = 0; \qquad T_2\left(\sqrt{1 - d^2}\right) - 2(9.81) = 0 \qquad \textbf{[1]}$$

$$\Sigma F_n = ma_n; \qquad T_2\,(d') = 2\left(\frac{v_2^2}{d'/2}\right) \qquad \textbf{[2]}$$

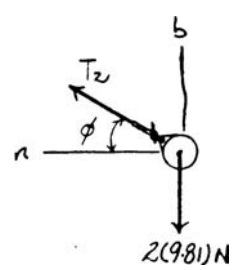

Conservation of Angular Momentum: Since no force acts on the ball along the tangent of the circular path, the angular momentum is conserved about z axis. Applying Eq. 15–23, we have

$$(\mathbf{H}_z)_1 = (\mathbf{H}_z)_2$$

$$r_1\,mv_1 = r_2\,mv_2$$

$$0.25\,(2)\,(0.7958) = \frac{d'}{2}\,(2)\,v_2 \qquad \textbf{[3]}$$

Solving Eqs. [1], [2] and [3] yields

$$d' = 0.41401 \text{ m} = 0.414 \text{ m} \qquad T_2 = 21.6 \text{ N} \qquad \textbf{Ans.}$$

$$v_2 = 0.9610 \text{ m/s}$$

© 2010 Pearson Education, Inc., Upper Saddle River, NJ. All rights reserved. This material is protected under all copyright laws as they currently exist. No portion of this material may be reproduced, in any form or by any means, without permission in writing from the publisher.

15–102. A gymnast having a mass of 80 kg holds the two rings with his arms down in the position shown as he swings downward. His center of mass is located at point G_1. When he is at the lowest position of his swing, his velocity is $(v_G)_1 = 5$ m/s. At this position he *suddenly* lets his arms come up, shifting his center of mass to position G_2. Determine his new velocity in the upswing and the angle θ to which he swings before momentarily coming to rest. Treat his body as a particle.

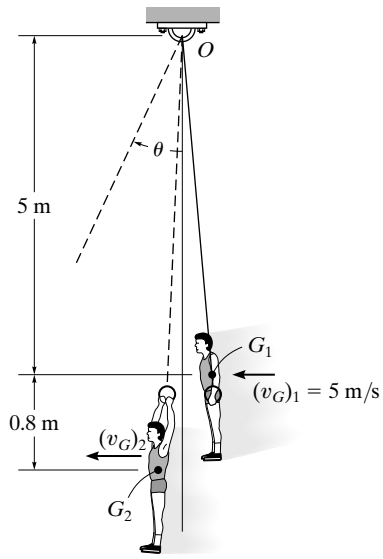

$(\mathbf{H}_O)_1 = (\mathbf{H}_O)_2$

$5\,(80)(5) = 5.8\,(80)\,v_2 \qquad v_2 = 4.310 \text{ m/s} = 4.31 \text{ m/s}$ **Ans.**

$T_1 + V_1 = T_2 + V_2$

$\frac{1}{2}(80)(4.310)^2 + 0 = 0 + 80(9.81)\left[5.8\,(1 - \cos\theta)\right]$

$\theta = 33.2°$ **Ans.**

15–103. The four 5-lb spheres are rigidly attached to the crossbar frame having a negligible weight. If a couple moment $M = (0.5t + 0.8)$ lb · ft, where t is in seconds, is applied as shown, determine the speed of each of the spheres in 4 seconds starting from rest. Neglect the size of the spheres.

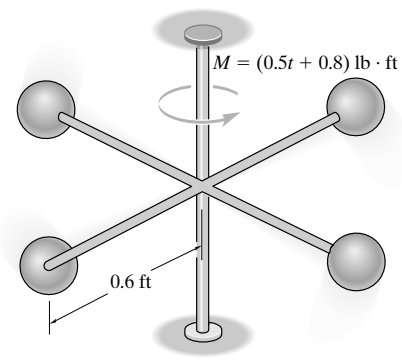

$(H_z)_1 + \Sigma \int M_z\,dt = (H_z)_2$

$0 + \int_0^4 (0.5\,t + 0.8)\;dt = 4\left[\left(\frac{5}{32.2}\right)(0.6\,v_2)\right]$

$7.2 = 0.37267\,v_2$

$v_2 = 19.3$ ft/s **Ans.**

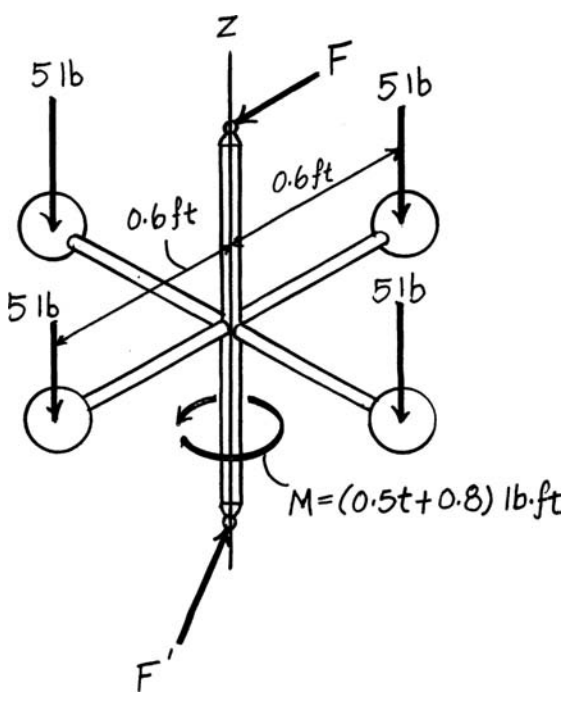

© 2010 Pearson Education, Inc., Upper Saddle River, NJ. All rights reserved. This material is protected under all copyright laws as they currently exist. No portion of this material may be reproduced, in any form or by any means, without permission in writing from the publisher.

***15–104.** At the instant $r = 1.5$ m, the 5-kg disk is given a speed of $v = 5$ m/s, perpendicular to the elastic cord. Determine the speed of the disk and the rate of shortening of the elastic cord at the instant $r = 1.2$ m. The disk slides on the smooth horizontal plane. Neglect its size. The cord has an unstretched length of 0.5 m.

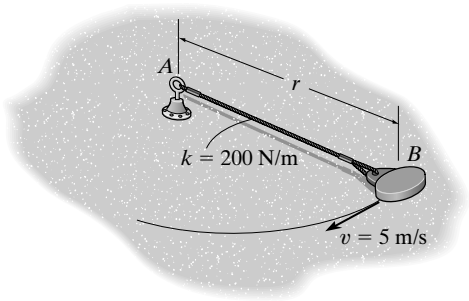

Conservation of Energy: The intial and final stretch of the elastic cord is $s_1 = 1.5 - 0.5 = 1$ m and $s_2 = 1.2 - 0.5 = 0.7$ m. Thus,

$$T_1 + V_1 = T_2 + V_2$$

$$\frac{1}{2}mv_1^2 + \frac{1}{2}ks_1^2 = \frac{1}{2}mv_2^2 = \frac{1}{2}ks_2^2$$

$$\frac{1}{2}5(5^2) + \frac{1}{2}(200)(1^2) = \frac{1}{2}(5)v_2^2 + \frac{1}{2}(200)(0.7^2)$$

$$v_2 = 6.738 \text{ m/s}$$ **Ans.**

Conservation of Angular Momentum: Since no angular impulse acts on the disk about an axis perpendicular to the page passing through point O, its angular momentum of the system is conserved about this z axis. Thus,

$$(H_O)_1 = (H_O)_2$$

$$r_1 m v_1 = r_2 m (v_2)_\theta$$

$$(v_2)_\theta = \frac{r_1 v_1}{r_2} = \frac{1.5(5)}{1.2} = 6.25 \text{ m/s}$$

Since $v_2^2 = (v_2)_\theta^2 + (v_2)_r^2$, then

$$(v_2)_r = \sqrt{v_2^2 - (v_2)_\theta^2} = \sqrt{6.738^2 - 6.25^2} = 2.52 \text{ m/s}$$ **Ans.**

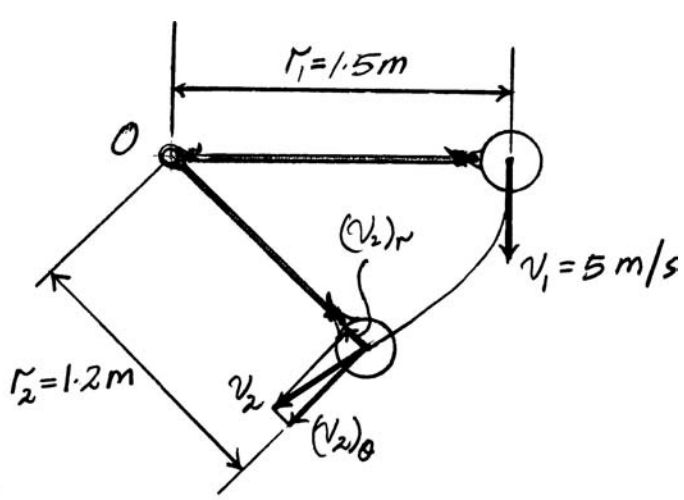

© 2010 Pearson Education, Inc., Upper Saddle River, NJ. All rights reserved. This material is protected under all copyright laws as they currently exist. No portion of this material may be reproduced, in any form or by any means, without permission in writing from the publisher.

•15–105. The 150-lb car of an amusement park ride is connected to a rotating telescopic boom. When $r = 15$ ft, the car is moving on a horizontal circular path with a speed of 30 ft/s. If the boom is shortened at a rate of 3 ft/s, determine the speed of the car when $r = 10$ ft. Also, find the work done by the axial force **F** along the boom. Neglect the size of the car and the mass of the boom.

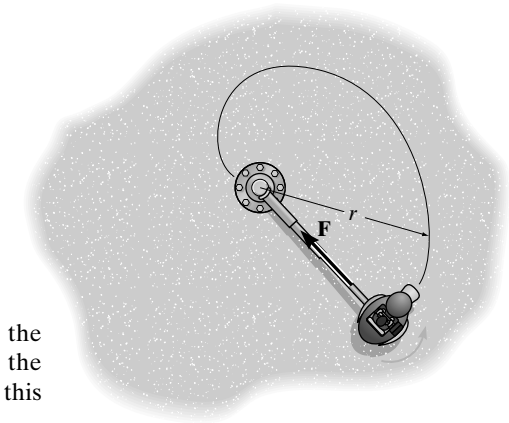

Conservation of Angular Momentum: By referring to Fig. *a*, we notice that the angular momentum of the car is conserved about an axis perpendicular to the page passing through point *O*, since no angular impulse acts on the car about this axis. Thus,

$$(H_O)_1 = (H_O)_2$$

$$r_1 m v_1 = r_2 m (v_2)_\theta$$

$$(v_2)_\theta = \frac{r_1 v_1}{r_2} = \frac{15(30)}{10} = 45 \text{ ft/s}$$

Thus, the magnitude of $\mathbf{v}_2$ is

$$v_2 = \sqrt{(v_2)_r{}^2 - (v_2)_\theta{}^2} = \sqrt{3^2 + 45^2} = 45.10 \text{ ft/s} = 45.1 \text{ ft/s} \qquad \textbf{Ans.}$$

Principle of Work and Energy: Using the result of v_2,

$$T_1 + \Sigma U_{1-2} = T_2$$

$$\frac{1}{2} m v_1{}^2 + U_F = \frac{1}{2} m v_2{}^2$$

$$\frac{1}{2}\left(\frac{150}{32.2}\right)(30^2) + U_F = \frac{1}{2}\left(\frac{150}{32.2}\right)(45.10^2)$$

$$U_F = 2641 \text{ ft} \cdot \text{lb} \qquad \textbf{Ans.}$$

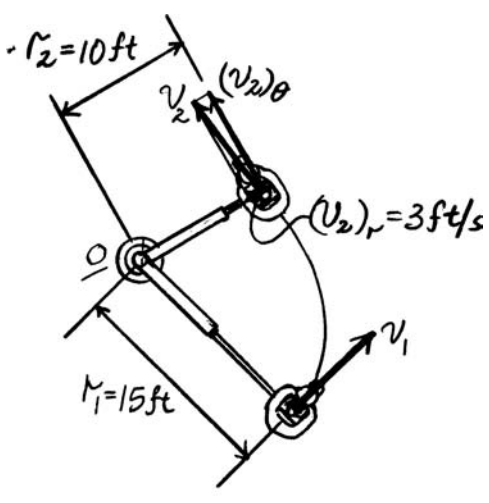

(a)

© 2010 Pearson Education, Inc., Upper Saddle River, NJ. All rights reserved. This material is protected under all copyright laws as they currently exist. No portion of this material may be reproduced, in any form or by any means, without permission in writing from the publisher.

15–106. A small ball bearing of mass m is given a velocity of v_0 at A parallel to the horizontal rim of a smooth bowl. Determine the magnitude of the velocity $\mathbf{v}$ of the ball when it has fallen through a vertical distance h to reach point B. Angle θ is measured from $\mathbf{v}$ to the horizontal at point B.

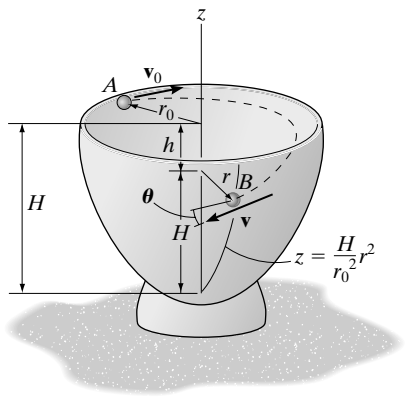

Conservation of Angular Momentum: By observing the free-body diagram of the ball shown in Fig. a, notice that the weight $\mathbf{W}$ of the ball is parallel to the z axis and the line of action of the normal reaction $\mathbf{N}$ always intersect the z axis, and they produce no angular impulse about the z axis. Thus, the angular momentum of the ball is conserved about the z axis. At point B, $z = H - h$. Thus, $H - h = \frac{H}{r_0^2} r^2$ or $r = \sqrt{\frac{H-h}{H}}\, r_0$. Thus, we can write

$$\left(H_1\right)_z = \left(H_2\right)_z$$

$$r_0 m v_0 = r m v \cos\theta$$

$$r_0 v_0 = \left(\sqrt{\frac{H-h}{H}}\, r_0\right) v \cos\theta$$

$$\cos\theta = \frac{v_0}{v}\sqrt{\frac{H}{Hh}} \qquad \textbf{(1)}$$

Conservation of Energy: By setting the datum at point B,

$$T_A + V_A = T_B + V_B$$

$$\frac{1}{2} m v_0^2 + mgh = \frac{1}{2} m v^2 + 0$$

$$v = \sqrt{v_0^2 + 2gh} \qquad \textbf{Ans.}$$

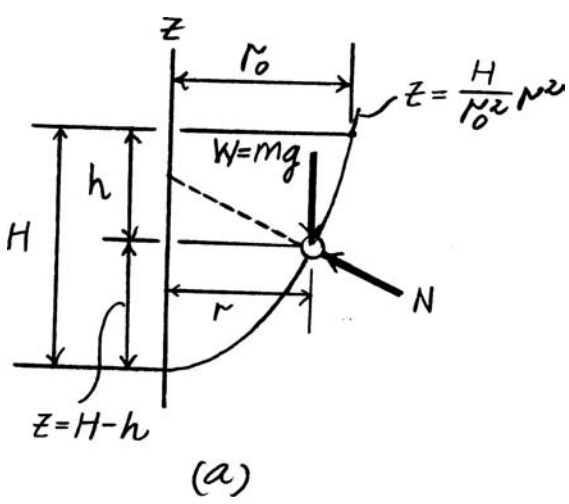

© 2010 Pearson Education, Inc., Upper Saddle River, NJ. All rights reserved. This material is protected under all copyright laws as they currently exist. No portion of this material may be reproduced, in any form or by any means, without permission in writing from the publisher.

15–107. When the 2-kg bob is given a horizontal speed of 1.5 m/s, it begins to rotate around the horizontal circular path A. If the force **F** on the cord is increased, the bob rises and then rotates around the horizontal circular path B. Determine the speed of the bob around path B. Also, find the work done by force **F**.

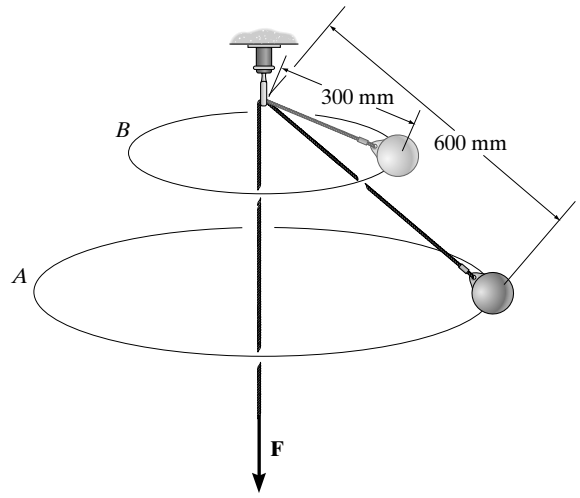

Equations of Motion: By referring to the free-body diagram of the bob shown in Fig. a,

$$+\uparrow \Sigma F_b = 0; \qquad F\cos\theta - 2(9.81) = 0 \qquad \textbf{(1)}$$

$$\leftarrow \Sigma F_n = ma_n; \qquad F\sin\theta = 2\left(\frac{v^2}{l\sin\theta}\right) \qquad \textbf{(2)}$$

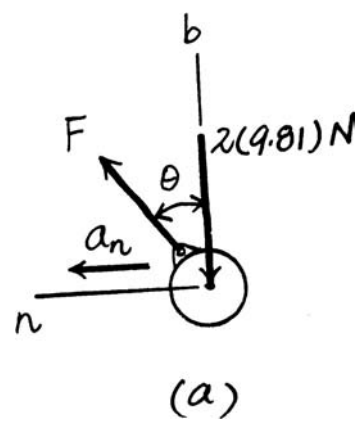

Eliminating F from Eqs. (1) and (2) yields

$$\frac{\sin^2\theta}{\cos\theta} = \frac{v^2}{9.81l}$$

$$\frac{1-\cos^2\theta}{\cos\theta} = \frac{v^2}{9.81l} \qquad \textbf{(3)}$$

When $l = 0.6$ m, $v = v_1 = 5$ m/s. Using Eq. (3), we obtain

$$\frac{1-\cos^2\theta_1}{\cos\theta_1} = \frac{1.5^2}{9.81(0.6)}$$

$$\cos^2\theta_1 + 0.3823\cos\theta_1 - 1 = 0$$

Solving for the root < 1, we obtain

$$\theta_1 = 34.21°$$

Conservation of Angular Momentum: By observing the free-body diagram of the system shown in Fig. b, notice that **W** and **F** are parallel to the z axis, $\mathbf{M}_S$ has no z component, and $\mathbf{F}_S$ acts through the z axis. Thus, they produce no angular impulse about the z axis. As a result, the angular momentum of the system is conserved about the z axis. When $\theta = \theta_1 = 34.21°$ and $\theta = \theta_2$, $r = r_1 = 0.6\sin 34.21° = 0.3373$ m and $r = r_2 = 0.3\sin\theta_2$. Thus,

$$(H_z)_1 = (H_z)_2$$

$$r_1 m v_1 = r_2 m v_2$$

$$0.3373(2)(1.5) = 0.3\sin\theta_2\,(2)v_2$$

$$v_2\sin\theta_2 = 1.6867 \qquad \textbf{(4)}$$

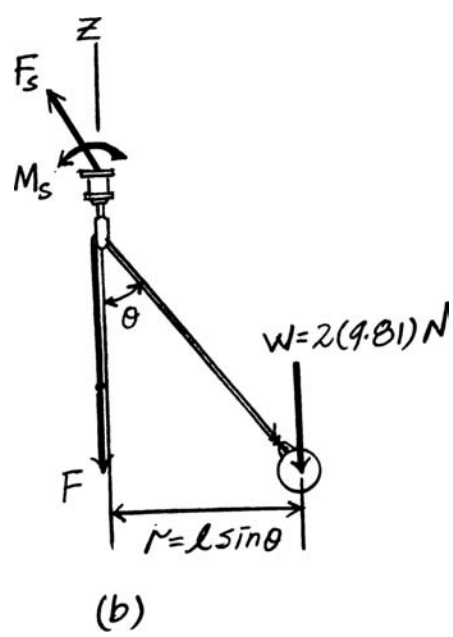

© 2010 Pearson Education, Inc., Upper Saddle River, NJ. All rights reserved. This material is protected under all copyright laws as they currently exist. No portion of this material may be reproduced, in any form or by any means, without permission in writing from the publisher.

15–107. Continued

Substituting $l = 0.3$ and $\theta = \theta_2$ $v = v_2$ into Eq. (3) yields

$$\frac{1 - \cos^2\theta_2}{\cos\theta_2} = \frac{v^2}{9.81(0.3)}$$

$$\frac{1 - \cos^2\theta_2}{\cos\theta_2} = \frac{{v_2}^2}{2.943} \qquad \textbf{(5)}$$

Eliminating v_2 from Eqs. (4) and (5),

$$\sin^3\theta_2 \tan\theta_2 - 0.9667 = 0$$

Solving the above equation by trial and error, we obtain

$$\theta_2 = 57.866°$$

Substituting the result of θ_2 into Eq. (4), we obtain

$$v_2 = 1.992 \text{ m/s} = 1.99 \text{ m/s} \qquad \textbf{Ans.}$$

Principle of Work and Energy: When θ changes from θ_1 to θ_2, **W** displaces vertically upward $h = 0.6\cos 34.21° - 0.3\cos 57.866° = 0.3366$ m. Thus, **W** does negatives work.

$$T_1 + \Sigma U_{1-2} = T_2$$

$$\frac{1}{2}m{v_1}^2 + U_F + \left(-Wh\right) = \frac{1}{2}m{v_2}^2$$

$$\frac{1}{2}(2)(1.5^2) + U_F - 2(9.81)(0.3366) = \frac{1}{2}(2)(1.992)^2$$

$$U_F = 8.32 \text{ N}\cdot\text{m} \qquad \textbf{Ans.}$$

© 2010 Pearson Education, Inc., Upper Saddle River, NJ. All rights reserved. This material is protected under all copyright laws as they currently exist. No portion of this material may be reproduced, in any form or by any means, without permission in writing from the publisher.

***15–108.** A scoop in front of the tractor collects snow at a rate of 200 kg/s. Determine the resultant traction force **T** that must be developed on all the wheels as it moves forward on level ground at a constant speed of 5 km/h. The tractor has a mass of 5 Mg.

Here, the tractor moves with the constant speed of $v = \left[5\left(10^3\right)\frac{\text{m}}{\text{h}}\right]\left[\frac{1\text{ h}}{3600\text{ s}}\right] = 1.389\text{ m/s}$. Thus, $v_{D/s} = v = 1.389\text{ m/s}$ since the snow on the ground is at rest. The rate at which the tractor gains mass is $\frac{dm_s}{dt} = 200\text{ kg/s}$. Since the tractor is moving with a constant speeds $\frac{dv}{dt} = 0$. Referring to Fig. *a*,

$$\overset{+}{\leftarrow} \Sigma F_s = m\frac{dv}{dt} + v_{D/s}\frac{dm_s}{dt}; \qquad T = 0 + 1.389(200)$$

$$T = 278\text{ N} \qquad \textbf{Ans.}$$

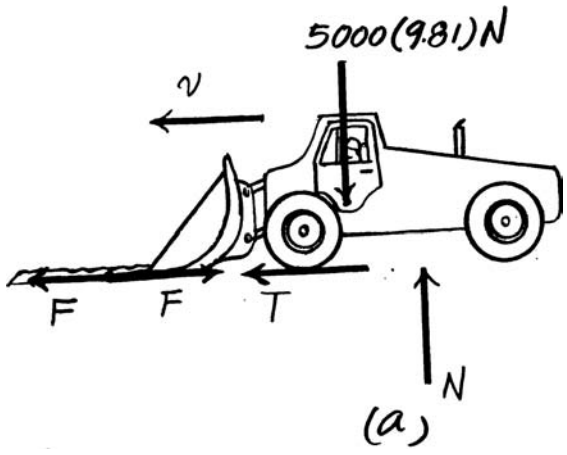

© 2010 Pearson Education, Inc., Upper Saddle River, NJ. All rights reserved. This material is protected under all copyright laws as they currently exist. No portion of this material may be reproduced, in any form or by any means, without permission in writing from the publisher.

•15–109. A four-engine commercial jumbo jet is cruising at a constant speed of 800 km/h in level flight when all four engines are in operation. Each of the engines is capable of discharging combustion gases with a velocity of 775 m/s relative to the plane. If during a test two of the engines, one on each side of the plane, are shut off, determine the new cruising speed of the jet. Assume that air resistance (drag) is proportional to the square of the speed, that is, $F_D = cv^2$, where c is a constant to be determined. Neglect the loss of mass due to fuel consumption.

Steady Flow Equation: Since the air is collected from a large source (the atmosphere), its entrance speed into the engine is negligible. The exit speed of the air from the engine is

$$\left(\overset{+}{\rightarrow}\right) \qquad v_e + v_p + v_{e/p}$$

When the four engines are in operation, the airplane has a constant speed of $v_p = \left[800(10^3)\,\frac{\text{m}}{\text{h}}\right]\left(\frac{1\text{ h}}{3600\text{ s}}\right) = 222.22$ m/s. Thus,

$$\left(\overset{+}{\rightarrow}\right) \qquad v_e = -222.22 + 775 = 552.78\text{ m/s} \rightarrow$$

Referring to the free-body diagram of the airplane shown in Fig. *a*,

$$\overset{+}{\rightarrow} \Sigma F_x = \frac{dm}{dt}\left[\left(v_B\right)_x - \left(v_A\right)_x\right]; \qquad C(222.22^2) = 4\,\frac{dm}{dt}\,(552.78 - 0)$$

$$C = 0.44775\,\frac{dm}{dt}$$

When only two engines are in operation, the exit speed of the air is

$$\left(\overset{+}{\rightarrow}\right) \qquad v_e = -v_p + 775$$

Using the result for C,

$$\overset{+}{\rightarrow} \Sigma F_x = \frac{dm}{dt}\left[\left(v_B\right)_x - \left(v_A\right)_x\right]; \quad \left(0.044775\,\frac{dm}{dt}\right)\left(v_p{}^2\right) = 2\frac{dm}{dt}\left[-v_p + 775\right) - 0\right]$$

$$0.044775 v_p{}^2 + 2v_p - 1550 = 0$$

Solving for the positive root,

$v_p = 165.06$ m/s $= 594$ km/h **Ans.**

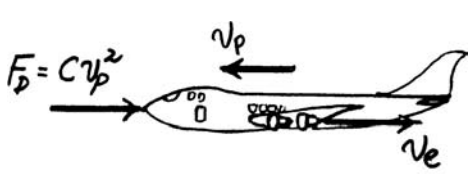

(a)

© 2010 Pearson Education, Inc., Upper Saddle River, NJ. All rights reserved. This material is protected under all copyright laws as they currently exist. No portion of this material may be reproduced, in any form or by any means, without permission in writing from the publisher.

15–110. The jet dragster when empty has a mass of 1.25 Mg and carries 250 kg of solid propellent fuel. Its engine is capable of burning the fuel at a constant rate of 50 kg/s, while ejecting it at 1500 m/s relative to the dragster. Determine the maximum speed attained by the dragster starting from rest. Assume air resistance is $F_D = (10v^2)$ N, where v is the dragster's velocity in m/s. Neglect rolling resistance.

The free-body diagram of the dragster and exhaust system is shown in Fig. *a*, The pair of thrust **T** cancel each other since they are internal to the system. The mass of the dragster at any instant t is $m = (1250 + 250) - 50t = (1500 - 50t)$ kg.

$$\overset{+}{\leftarrow} \Sigma F_s = m\frac{dv}{dt} - v_{D/e}\frac{dm_e}{dt}; \qquad -10v^2 = \left(1500 - 50t\right)\frac{dv}{dt} - 1500(50)$$

$$\frac{dt}{1500 - 50t} = \frac{dv}{75000 - 10v^2} \qquad \textbf{(1)}$$

The dragster acheives its maximum speed when all the fuel is consumed. The time it takes for this to occur is $t = \frac{250}{50} = 5$ s. Integratiing Eq. (1),

$$\int_0^{5\text{ s}} \frac{dt}{1500 - 50t} = \int_0^v \frac{dv}{75000 - 10v^2}$$

$$-\frac{1}{50}\,1\text{n}\left(1500 - 50t\right)\Big|_0^{5\text{ s}} = \frac{1}{2\sqrt{75000(10)}}\,1\text{n}\frac{\sqrt{75000} + \sqrt{10}v}{\sqrt{75000} - \sqrt{10}v}\Bigg|_0^{\text{v}}$$

$$1\text{n}\,\frac{\sqrt{75000} + \sqrt{10}v}{\sqrt{75000} - \sqrt{10}v} = 6.316$$

$$\frac{\sqrt{75000} + \sqrt{10}v}{\sqrt{75000} - \sqrt{10}v} = e^{6.316}$$

$v = 86.3$ m/s **Ans.**

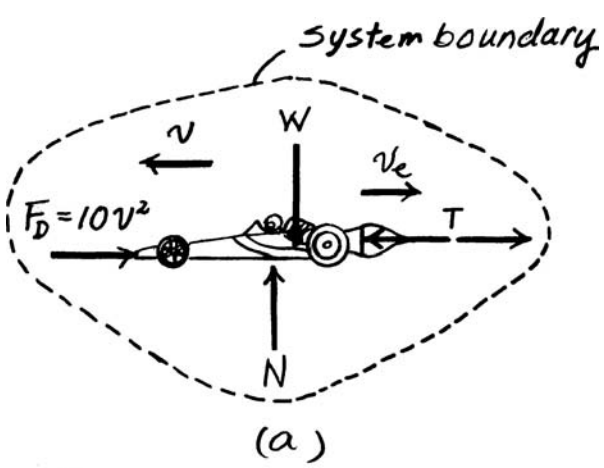

(a)

© 2010 Pearson Education, Inc., Upper Saddle River, NJ. All rights reserved. This material is protected under all copyright laws as they currently exist. No portion of this material may be reproduced, in any form or by any means, without permission in writing from the publisher.

15–111. The 150-lb fireman is holding a hose which has a nozzle diameter of 1 in. and hose diameter of 2 in. If the velocity of the water at discharge is 60 ft/s, determine the resultant normal and frictional force acting on the man's feet at the ground. Neglect the weight of the hose and the water within it. $\gamma_w = 62.4\ \text{lb/ft}^3$.

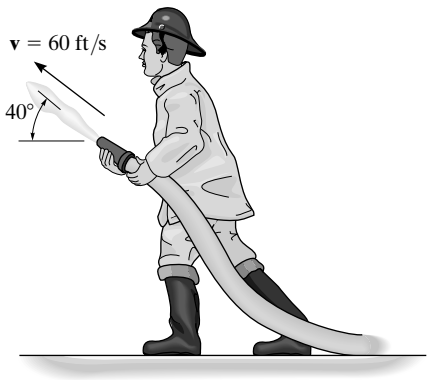

Originally, the water flow is horizontal. The fireman alters the direction of flow to 40° from the horizontal.

$$\frac{dm}{dt} = \rho v_B A_B = \frac{62.4}{32.2}(60)\left(\frac{\pi\left(\frac{1}{2}\right)^2}{(12)^2}\right) = 0.6342\ \text{slug/s}$$

Also, the velocity of the water through the hose is

$$\rho v_A A_A = \rho v_B A_B$$

$$\rho v_A\left(\frac{\pi(1)^2}{(12)^2}\right) = \rho\,(60)\left(\frac{\pi\left(\frac{1}{2}\right)^2}{(12)^2}\right)$$

$$v_A = 15\ \text{ft/s}$$

$$\overset{+}{\leftarrow} \Sigma F_x = \frac{dm}{dt}\left((v_B)_x - (v_A)_x\right)$$

$$F_f = 0.6342\left[60\cos 40^\circ - 15\right]$$

$$F_f = 19.6\ \text{lb} \qquad \textbf{Ans.}$$

$$+\uparrow \Sigma F_y = \frac{dm}{dt}\left((v_B)_y - (v_A)_y\right)$$

$$N_f - 150 = 0.6342\left[60\sin 40^\circ - 0\right]$$

$$N_f = 174\ \text{lb} \qquad \textbf{Ans.}$$

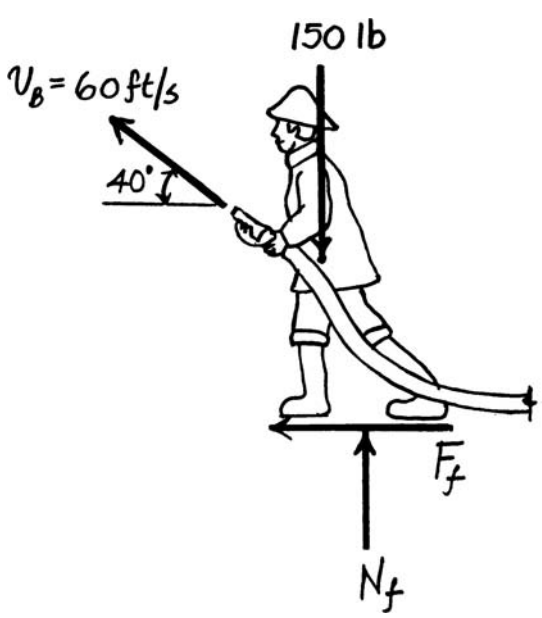

© 2010 Pearson Education, Inc., Upper Saddle River, NJ. All rights reserved. This material is protected under all copyright laws as they currently exist. No portion of this material may be reproduced, in any form or by any means, without permission in writing from the publisher.

***15–112.** When operating, the air-jet fan discharges air with a speed of $v_B = 20$ m/s into a slipstream having a diameter of 0.5 m. If air has a density of 1.22 kg/m^3, determine the horizontal and vertical components of reaction at C and the vertical reaction at each of the two wheels, D, when the fan is in operation. The fan and motor have a mass of 20 kg and a center of mass at G. Neglect the weight of the frame. Due to symmetry, both of the wheels support an equal load. Assume the air entering the fan at A is essentially at rest.

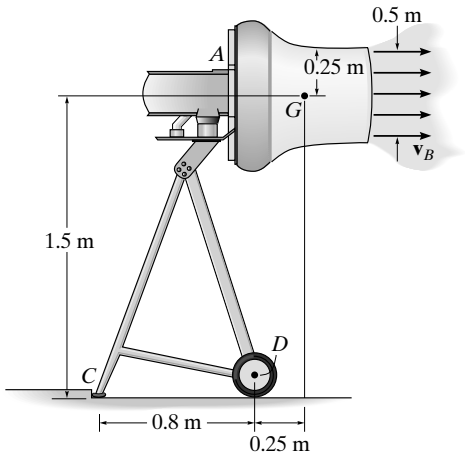

$$\frac{dm}{dt} = \rho v A = 1.22(20)(\pi)(0.25)^2 = 4.791 \text{ kg/s}$$

$$\xrightarrow{+} \Sigma F_x = \frac{dm}{dt}(v_{B_x} - v_{A_x})$$

$$C_x = 4.791(20 - 0)$$

$$C_x = 95.8 \text{ N} \qquad \textbf{Ans.}$$

$$+\uparrow \Sigma F_y = 0; \qquad C_y + 2D_y - 20(9.81) = 0$$

$$\circlearrowleft + \Sigma M_C = \frac{dm}{dt}(d_{CG}\, v_B - d_{CG}\, v_A)$$

$$2D_y(0.8) - 20(9.81)(1.05) = 4.791(-1.5(20) - 0)$$

Solving:

$$D_y = 38.9 \text{ N} \qquad \textbf{Ans.}$$

$$C_y = 118 \text{ N} \qquad \textbf{Ans.}$$

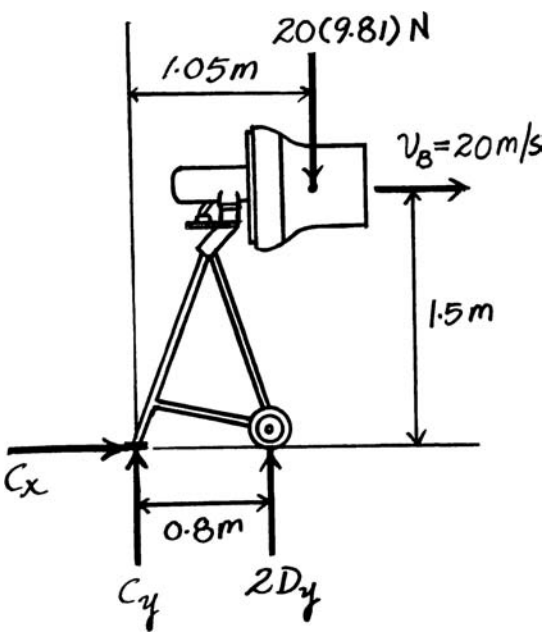

© 2010 Pearson Education, Inc., Upper Saddle River, NJ. All rights reserved. This material is protected under all copyright laws as they currently exist. No portion of this material may be reproduced, in any form or by any means, without permission in writing from the publisher.

•15–113. The blade divides the jet of water having a diameter of 3 in. If one-fourth of the water flows downward while the other three-fourths flows upwards, and the total flow is $Q = 0.5\ \text{ft}^3/\text{s}$, determine the horizontal and vertical components of force exerted on the blade by the jet, $\gamma_w = 62.4\ \text{lb/ft}^3$.

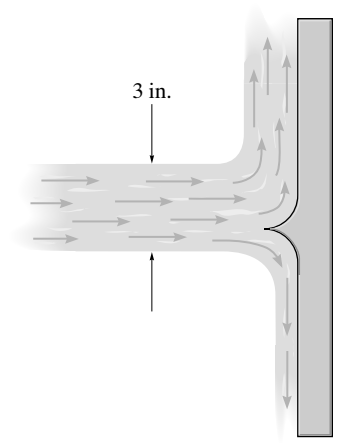

Equations of Steady Flow: Here, the flow rate $Q = 0.5\ \text{ft}^2/\text{s}$. Then, $v = \dfrac{Q}{A} = \dfrac{0.5}{\frac{\pi}{4}\left(\frac{3}{12}\right)^2} = 10.19\ \text{ft/s}$. Also, $\dfrac{dm}{dt} = \rho_w Q = \dfrac{62.4}{32.2}(0.5) = 0.9689\ \text{slug/s}$.

Applying Eq. 15–25 we have

$$\Sigma F_x = \Sigma \frac{dm}{dt}\left(v_{\text{out}_x} - v_{\text{in}_x}\right);\ -F_x = 0 - 0.9689\,(10.19) \qquad F_x = 9.87\ \text{lb} \qquad \textbf{Ans.}$$

$$\Sigma F_y = \Sigma \frac{dm}{dt}\left(v_{\text{out}_y} - v_{\text{in}_y}\right);\ F_y = \frac{3}{4}(0.9689)(10.19) + \frac{1}{4}(0.9689)(-10.19)$$

$$F_y = 4.93\ \text{lb} \qquad \textbf{Ans.}$$

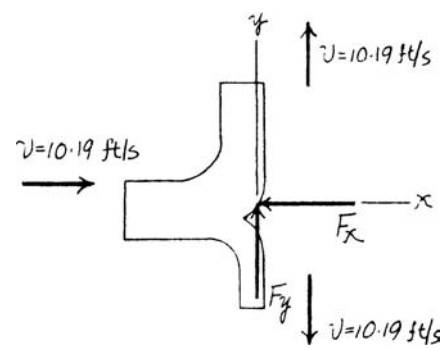

15–114. The toy sprinkler for children consists of a 0.2-kg cap and a hose that has a mass per length of 30 g/m. Determine the required rate of flow of water through the 5-mm-diameter tube so that the sprinkler will lift 1.5 m from the ground and hover from this position. Neglect the weight of the water in the tube. $\rho_w = 1\ \text{Mg/m}^3$.

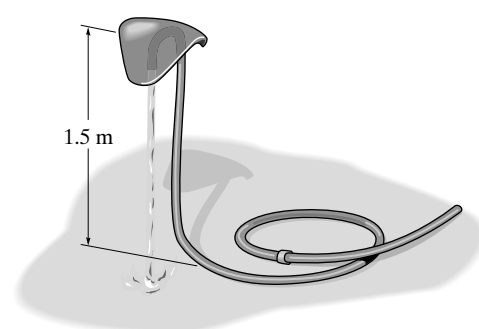

Equations of Steady Flow: Here, $v = \dfrac{Q}{\frac{\pi}{4}(0.005^2)} = \dfrac{Q}{6.25(10^{-6})\pi}$ and $\dfrac{dm}{dt} = \rho_w Q = 1000Q$. Applying Eq. 15–25, we have

$$\Sigma F_y = \frac{dm}{dt}\left(v_{B_y} - v_{A_y}\right);\ -[0.2 + 1.5\,(0.03)]\,(9.81) = 1000Q\left(-\frac{Q}{6.25\,(10^{-6})\ \pi} - 0\right)$$

$$Q = 0.217\left(10^{-3}\right)\text{m}^3/\text{s} \qquad \textbf{Ans.}$$

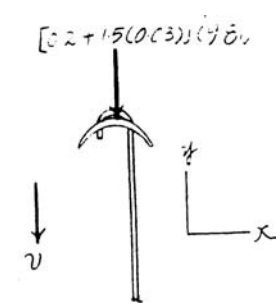

© 2010 Pearson Education, Inc., Upper Saddle River, NJ. All rights reserved. This material is protected under all copyright laws as they currently exist. No portion of this material may be reproduced, in any form or by any means, without permission in writing from the publisher.

15–115. The fire boat discharges two streams of seawater, each at a flow of 0.25 m^3/s and with a nozzle velocity of 50 m/s. Determine the tension developed in the anchor chain, needed to secure the boat. The density of seawater is $\rho_{sw} = 1020\ kg/m^3$.

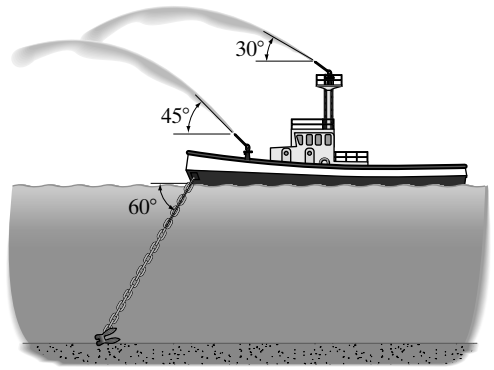

Steady Flow Equation: Here, the mass flow rate of the sea water at nozzles A and B are $\frac{dm_A}{dt} = \frac{dm_B}{dt} = \rho_{sw} Q = 1020(0.25) = 225$ kg/s. Since the sea water is collected from the large reservoir (the sea), the velocity of the sea water entering the control volume can be considered zero. By referring to the free-body diagram of the control volume(the boat),

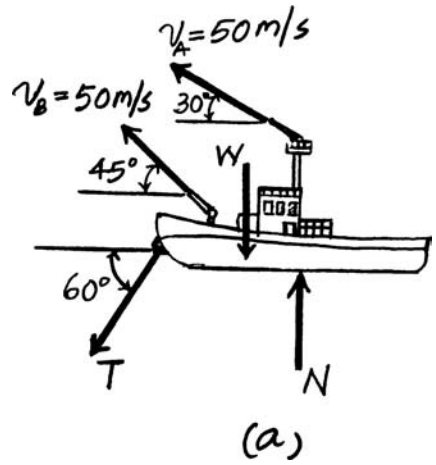

$$\overset{+}{\leftarrow} \Sigma F_x = \frac{dm_A}{dt}(v_A)_x + \frac{dm_B}{dt}(v_B)_x;$$

$$T \cos 60° = 225(50 \cos 30°) + 225(50 \cos 45°)$$

$$T = 40\,114.87 \text{ N} = 40.1 \text{ kN}$$ **Ans.**

© 2010 Pearson Education, Inc., Upper Saddle River, NJ. All rights reserved. This material is protected under all copyright laws as they currently exist. No portion of this material may be reproduced, in any form or by any means, without permission in writing from the publisher.

***15–116.** A speedboat is powered by the jet drive shown. Seawater is drawn into the pump housing at the rate of 20 ft^3/s through a 6-in.-diameter intake A. An impeller accelerates the water flow and forces it out horizontally through a 4-in.- diameter nozzle B. Determine the horizontal and vertical components of thrust exerted on the speedboat. The specific weight of seawater is $\gamma_{sw} = 64.3\ lb/ft^3$.

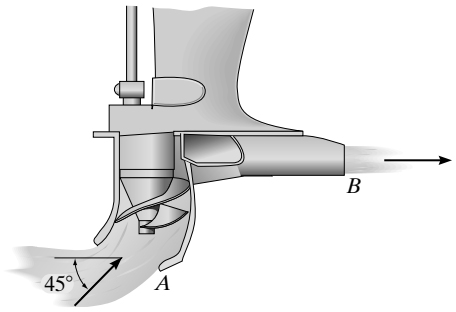

Steady Flow Equation: The speed of the sea water at the hull bottom A and B are $v_A = \dfrac{Q}{A_A} = \dfrac{20}{\frac{\pi}{4}\left(\frac{6}{12}\right)^2} = 101.86\ ft/s$ and $v_B = \dfrac{Q}{A_B} = \dfrac{20}{\frac{\pi}{4}\left(\frac{4}{12}\right)^2} = 229.18\ ft/s$ and the mass flow rate at the hull bottom A and nozle B are the same, i.e., $\dfrac{dm_A}{dt} = \dfrac{dm_B}{dt} = \dfrac{dm}{dt} = \rho_{sw} Q = \left(\dfrac{64.3}{32.2}\right)(20) = 39.94\ slug/s$. By referring to the free-body diagram of the control volume shown in Fig. a,

$$\left(\overset{+}{\rightarrow}\right)\Sigma F_x = \frac{dm}{dt}\left[(v_B)_x - (v_A)_x\right]; \qquad F_x = 39.94\left(229.18 - 101.86\cos 45°\right)$$

$$= 6276.55\ lb = 6.28\ kip \qquad \textbf{Ans.}$$

$$\left(+\uparrow\right)\Sigma F_y = \frac{dm}{dt}\left[(v_B)_y - (v_A)_y\right]; \qquad F_y = 39.94\left(101.86\sin 45° - 0\right)$$

$$= 2876.53\ lb = 2.28\ kip \qquad \textbf{Ans.}$$

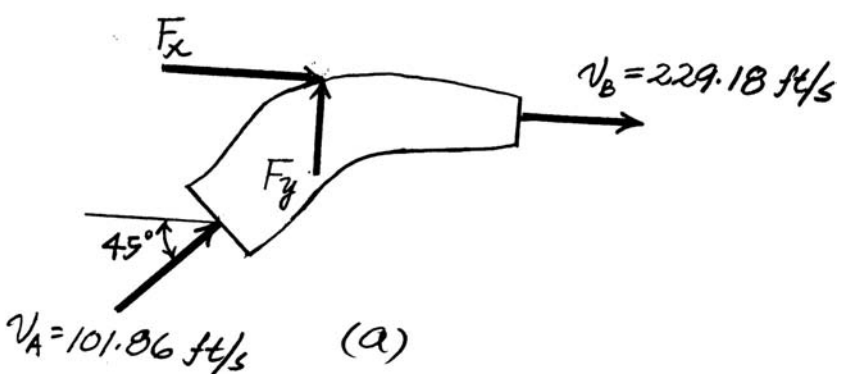

© 2010 Pearson Education, Inc., Upper Saddle River, NJ. All rights reserved. This material is protected under all copyright laws as they currently exist. No portion of this material may be reproduced, in any form or by any means, without permission in writing from the publisher.

•15–117. The fan blows air at 6000 ft^3/min. If the fan has a weight of 30 lb and a center of gravity at G, determine the smallest diameter d of its base so that it will not tip over. The specific weight of air is $\gamma = 0.076$ lb/ft^3.

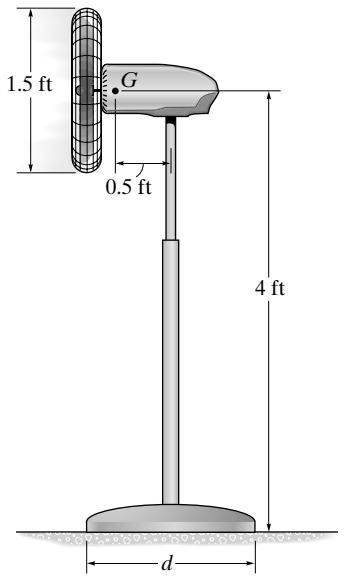

Equations of Steady Flow: Here $Q = \left(\frac{6000\text{ ft}^3}{\text{min}}\right) \times \left(\frac{1\text{ min}}{60\text{ s}}\right) = 100\text{ ft}^3/\text{s}$. Then, $v = \frac{Q}{A} = \frac{100}{\frac{\pi}{4}(1.5^2)} = 56.59$ ft/s. Also, $\frac{dm}{dt} = \rho_a Q = \frac{0.076}{32.2}(100) = 0.2360$ slug/s. Applying Eq. 15–26 we have

$$\circlearrowleft + \Sigma M_O = \frac{dm}{dt}(d_{OB}\, v_B - d_{OA}\, v_A);\quad 30\left(0.5 + \frac{d}{2}\right) = 0.2360\,[4(56.59) - 0]$$

$$d = 2.56\text{ ft} \qquad \textbf{Ans.}$$

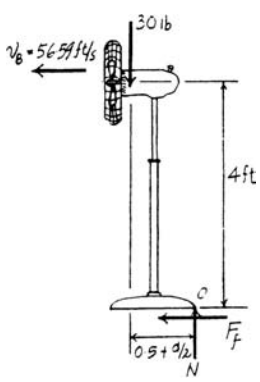

15–118. The elbow for a 5-in-diameter buried pipe is subjected to a static pressure of 10 lb/in^2. The speed of the water passing through it is $v = 8$ ft/s. Assuming the pipe connections at A and B do not offer any vertical force resistance on the elbow, determine the resultant vertical force **F** that the soil must then exert on the elbow in order to hold it in equilibrium. Neglect the weight of the elbow and the water within it. $\gamma_w = 62.4$ lb/ft^3.

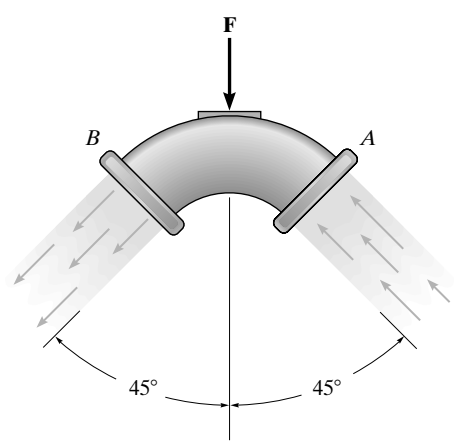

Equations of Steady Flow: Here. $Q = vA = 8\left[\frac{\pi}{4}\left(\frac{5}{12}\right)^2\right] = 1.091\text{ ft}^3/\text{s}$. Then, the mass flow rate is $\frac{dm}{dt} = \rho_w Q = \frac{62.4}{32.2}(1.091) = 2.114$ slug/s. Also, the force induced by the water pressure at A is $F = \rho A = 10\left[\frac{\pi}{4}(5^2)\right] = 62.5\pi$ lb. Applying Eq. 15–26, we have

$$\Sigma F_y = \frac{dm}{dt}(v_{B_y} - v_{A_y});\ -F + 2(62.5\,\pi\cos 45°) = 2.114(-8\sin 45° - 8\sin 45°)$$

$$F = 302\text{ lb} \qquad \textbf{Ans.}$$

$$\Sigma F_x = \frac{dm}{dt}(v_{B_x} - v_{A_x});\ 62.5\,\pi\sin 45° - 62.5\,\pi\sin 45°$$
$$= 2.114[-8\cos 45° - (-8\cos 45°)]$$

$$0 = 0 \qquad \textbf{(Check!)}$$

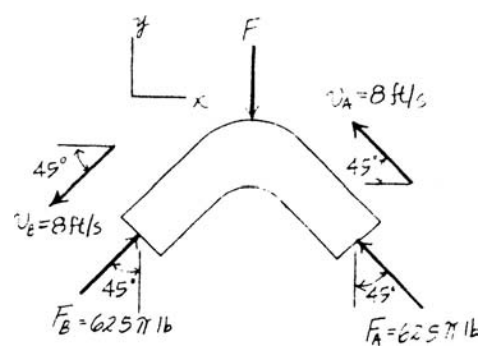

© 2010 Pearson Education, Inc., Upper Saddle River, NJ. All rights reserved. This material is protected under all copyright laws as they currently exist. No portion of this material may be reproduced, in any form or by any means, without permission in writing from the publisher.

15–119. The hemispherical bowl of mass m is held in equilibrium by the vertical jet of water discharged through a nozzle of diameter d. If the discharge of the water through the nozzle is Q, determine the height h at which the bowl is suspended. The water density is ρ_w. Neglect the weight of the water jet.

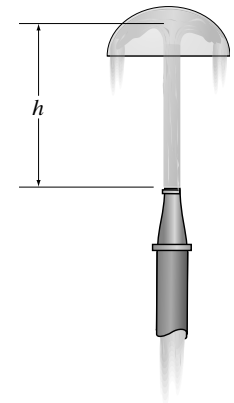

Conservation of Energy: The speed at which the water particle leaves the nozzle is $v_1 = \frac{Q}{A} = \frac{Q}{\frac{\pi}{4}d^2} = \frac{4Q}{\pi d^2}$. The speed of particle v_A when it comes in contact with the bowl can be determined using conservation of energy. With reference to the datum set in Fig. a,

$$T_1 + V_1 = T_2 + V_2 0$$

$$\frac{1}{2}mv_1{}^2 + (V_g)_1 = \frac{1}{2}mv_2{}^2 + (V_g)_2$$

$$\frac{1}{2}m\left(\frac{4Q}{\pi d^2}\right)^2 + 0 = \frac{1}{2}mv_A{}^2 + mgh$$

$$v_A = \sqrt{\frac{16Q^2}{\pi^2 d^4} - 2gh}$$

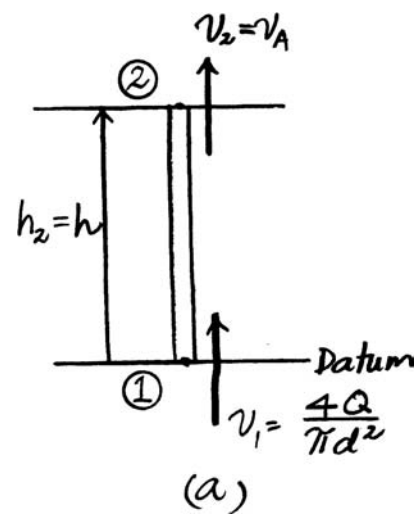

Steady Flow Equation: The mass flow rate of the water jet that enters the control volume at A is $\frac{dm_A}{dt} = \rho_w Q$, and exits from the control volume at B is $\frac{dm_B}{dt} = \frac{dm_A}{dt} = \rho_w Q$. Thus, $v_B = v_A = \sqrt{\frac{16Q^2}{\pi^2 d^4} - 2gh}$. Here, the vertical force acting on the control volume is equal to the weight of the bowl. By referring to the free - body diagram of the control volume, Fig. b,

$$+\uparrow \Sigma F_y = 2\frac{dm_B}{dt}v_B - \frac{dm_A}{dt}v_A;$$

$$-mg = -(\rho_w Q)\left(\sqrt{\frac{16Q^2}{\pi^2 d^4} - 2gh}\right) - \rho_w Q\left(\sqrt{\frac{16Q^2}{\pi^2 d^4} - 2gh}\right)$$

$$mg = 2\rho_w Q\left(\sqrt{\frac{16Q^2}{\pi^2 d^4} - 2gh}\right)$$

$$m^2 g^2 = 4\rho_w{}^2 Q^2\left(\frac{16Q^2}{\pi^2 d^4} - 2gh\right)$$

Ans. $$h = \frac{8Q^2}{\pi^2 d^4 g} - \frac{m^2 g}{8\rho_w{}^2 Q^2}$$

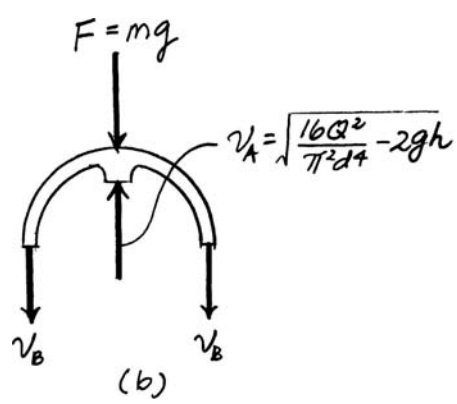

© 2010 Pearson Education, Inc., Upper Saddle River, NJ. All rights reserved. This material is protected under all copyright laws as they currently exist. No portion of this material may be reproduced, in any form or by any means, without permission in writing from the publisher.

***15–120.** The chute is used to divert the flow of water, $Q = 0.6\ \text{m}^3/\text{s}$. If the water has a cross-sectional area of $0.05\ \text{m}^2$, determine the force components at the pin D and roller C necessary for equilibrium. Neglect the weight of the chute and weight of the water on the chute. $\rho_w = 1\ \text{Mg/m}^3$.

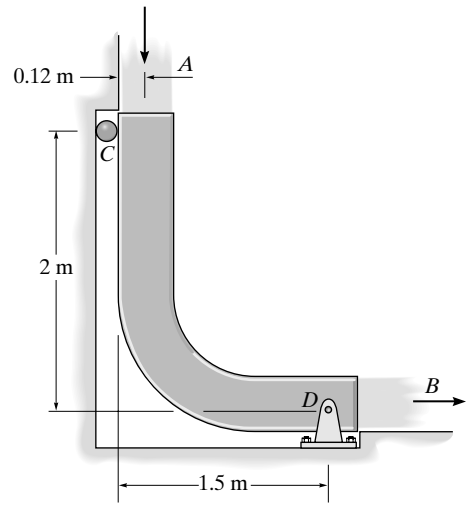

Equations of Steady Flow: Here, the flow rate $Q = 0.6\ \text{m}^2/\text{s}$. Then, $v = \dfrac{Q}{A} = \dfrac{0.6}{0.05} = 12.0\ \text{m/s}$. Also, $\dfrac{dm}{dt} = \rho_w Q = 1000\,(0.6) = 600\ \text{kg/s}$. Applying Eqs. 15–26 and 15–28, we have

$$\circlearrowleft + \Sigma M_A = \frac{dm}{dt}(d_{DB}\,v_B - d_{DA}\,v_A);$$

$$-C_x\,(2) = 600\,[0 - 1.38(12.0)] \qquad C_x = 4968\ \text{N} = 4.97\ \text{kN} \qquad \textbf{Ans.}$$

$$\xrightarrow{+} \Sigma F_x = \frac{dm}{dt}\left(v_{B_x} - v_{A_x}\right);$$

$$D_x + 4968 = 600\,(12.0 - 0) \qquad D_x = 2232\text{N} = 2.23\ \text{kN} \qquad \textbf{Ans.}$$

$$+\uparrow \Sigma F_y = \Sigma\frac{dm}{dt}\left(v_{\text{out}_y} - v_{\text{in}_y}\right);$$

$$D_y = 600[0 - (-12.0)] \qquad D_y = 7200\ \text{N} = 7.20\ \text{kN} \qquad \textbf{Ans.}$$

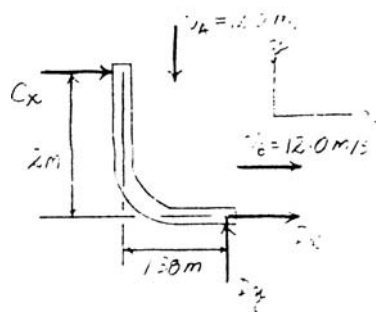

•15–121. The bend is connected to the pipe at flanges A and B as shown. If the diameter of the pipe is 1 ft and it carries a discharge of $50\ \text{ft}^3/\text{s}$, determine the horizontal and vertical components of force reaction and the moment reaction exerted at the fixed base D of the support. The total weight of the bend and the water within it is 500 lb, with a mass center at point G. The gauge pressure of the water at the flanges at A and B are 15 psi and 12 psi, respectively. Assume that no force is transferred to the flanges at A and B. The specific weight of water is $\gamma_w = 62.4\ \text{lb/ft}^3$.

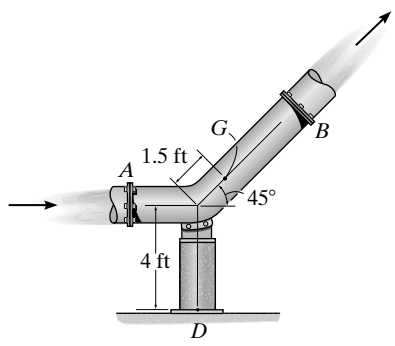

Free-Body Diagram: The free-body of the control volume is shown in Fig. *a*. The force exerted on sections A and B due to the water pressure is $F_A = P_A A_A = 15\left[\dfrac{\pi}{4}\left(12^2\right)\right] = 1696.46\ \text{lb}$ and $F_B = P_B A_B = 12\left[\dfrac{\pi}{4}\left(12^2\right)\right] = 1357.17\ \text{lb}$. The speed of the water at, sections A and B are $v_A = v_B = \dfrac{Q}{A} = \dfrac{50}{\frac{\pi}{4}\left(1^2\right)} = 63.66\ \text{ft/s}$. Also, the mass flow rate at these two sections are $\dfrac{dm_A}{dt} = \dfrac{dm_B}{dt} = \rho_W Q = \left(\dfrac{62.4}{32.2}\right)(50) = 96.894\ \text{slug/s}$.

© 2010 Pearson Education, Inc., Upper Saddle River, NJ. All rights reserved. This material is protected under all copyright laws as they currently exist. No portion of this material may be reproduced, in any form or by any means, without permission in writing from the publisher.

Steady Flow Equation: The moment steady flow equation will be written about point D to eliminate D_x and D_y.

$$\circlearrowleft + \Sigma M_D = \frac{dm_B}{dt} dv_B - \frac{dm_A}{dt} dv_A;$$

$$M_D + 1357.17 \cos 45°(4) - 500\left(1.5 \cos 45°\right) - 1696.46(4)$$

$$= -96.894(4)\left(63.66 \cos 45°\right) - [-96.894(4)(63.66)]$$

$$M_D = 10\,704.35 \text{ lb} \cdot \text{ft} = 10.7 \text{ kip} \cdot \text{ft} \qquad \textbf{Ans.}$$

Writing the force steady flow equation along the x and y axes,

$$(+\uparrow)\Sigma F_y = \frac{dm}{dt}\left[(v_B)_y - (v_A)_y\right];$$

$$D_y - 500 - 1357.17 \sin 45° = 96.894(63.66 \sin 45° - 0)$$

$$D_y = 5821.44 \text{ lb} = 5.82 \text{ kip} \qquad \textbf{Ans.}$$

$$\left(\overset{+}{\rightarrow}\right)\Sigma F_x = \frac{dm}{dt}\left[(v_B)_x - (v_A)_x\right];$$

$$1696.46 - 1357.17 \cos 45° - D_x = 96.894[63.66 \cos 45° - 63.66]$$

$$D_x = 2543.51 \text{ lb} = 2.54 \text{ kip} \qquad \textbf{Ans.}$$

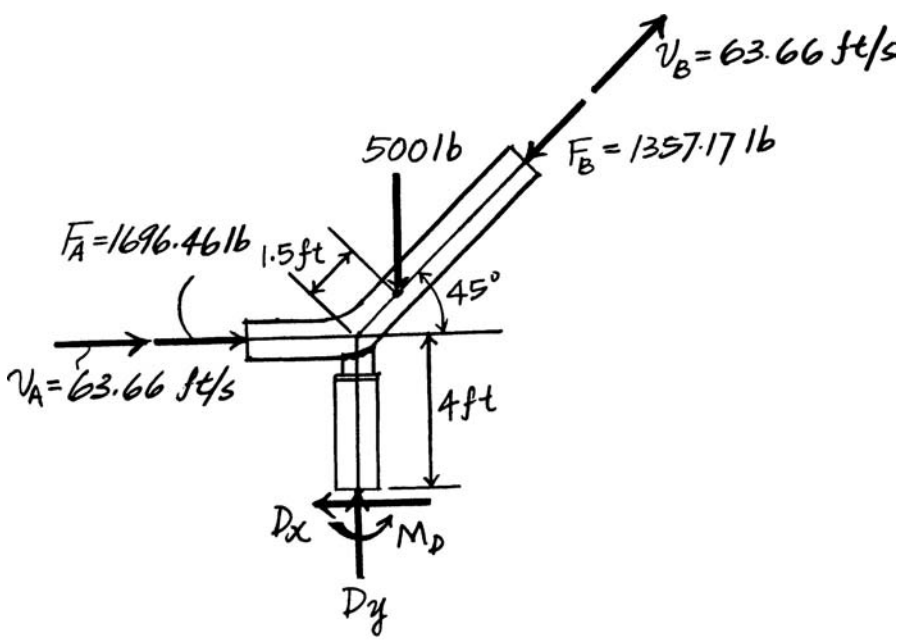

(a)

© 2010 Pearson Education, Inc., Upper Saddle River, NJ. All rights reserved. This material is protected under all copyright laws as they currently exist. No portion of this material may be reproduced, in any form or by any means, without permission in writing from the publisher.

15–122. The gauge pressure of water at C is 40 lb/in^2. If water flows out of the pipe at A and B with velocities $v_A = 12$ ft/s and $v_B = 25$ ft/s, determine the horizontal and vertical components of force exerted on the elbow necessary to hold the pipe assembly in equilibrium. Neglect the weight of water within the pipe and the weight of the pipe. The pipe has a diameter of 0.75 in. at C, and at A and B the diameter is 0.5 in. $\gamma_w = 62.4$ lb/ft^3.

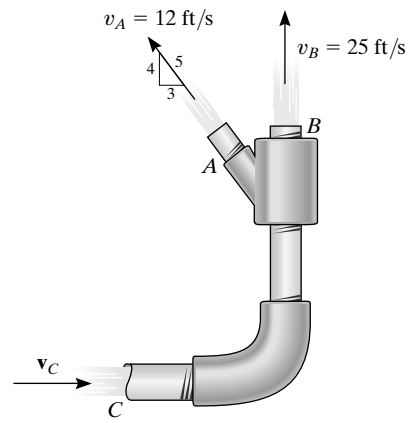

$$\frac{dm_A}{dt} = \frac{63.4}{32.2}(25)(\pi)\left(\frac{025}{15}\right)^2 = 0.03171 \text{ slug/s}$$

$$\frac{dm_B}{dt} = \frac{62.4}{32.2}(25)(\pi)\left(\frac{0.25}{12}\right)^2 = 0.06606 \text{ slug/s}$$

$$\frac{dm_C}{dt} = 0.03171 + 0.06606 = 0.09777 \text{ slug/s}$$

$$v_C A_C = v_A A_A + v_B A_B$$

$$v_C(\pi)\left(\frac{0.375}{12}\right)^2 = 12(\pi)\left(\frac{0.25}{12}\right)^2 + 25(\pi)\left(\frac{0.25}{12}\right)^2$$

$$v_C = 16.44 \text{ ft/s}$$

$$\overset{+}{\rightarrow} \Sigma F_x = \frac{dm_B}{dt} v_{B_s} + \frac{dm_A}{dt} v_{A_s} - \frac{dm_C}{dt} v_{C_s}$$

$$40(\pi)(0.375)^2 - F_x = 0 - 0.03171(12)\left(\frac{3}{5}\right) - 0.09777(16.44)$$

$$F_x = 19.5 \text{ lb}$$ **Ans.**

$$+\uparrow \Sigma F_y = \frac{dm_B}{dt} v_{B_y} + \frac{dm_A}{dt} v_{A_y} - \frac{dm_C}{dt} v_{C_y}$$

$$F_y = 0.06606(25) + 0.03171\left(\frac{4}{5}\right)(12) - 0$$

$$F_y = 1.9559 = 1.96 \text{ lb}$$ **Ans.**

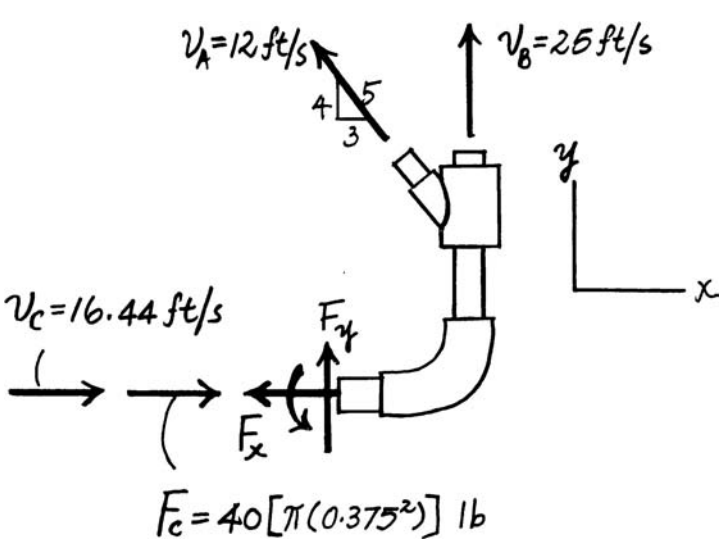

© 2010 Pearson Education, Inc., Upper Saddle River, NJ. All rights reserved. This material is protected under all copyright laws as they currently exist. No portion of this material may be reproduced, in any form or by any means, without permission in writing from the publisher.

15–123. A missile has a mass of 1.5 Mg (without fuel). If it consumes 500 kg of solid fuel at a rate of 20 kg/s and ejects it with a velocity of 2000 m/s relative to the missile, determine the velocity and acceleration of the missile at the instant all the fuel has been consumed. Neglect air resistance and the variation of its weight with altitude. The missile is launched vertically starting from rest.

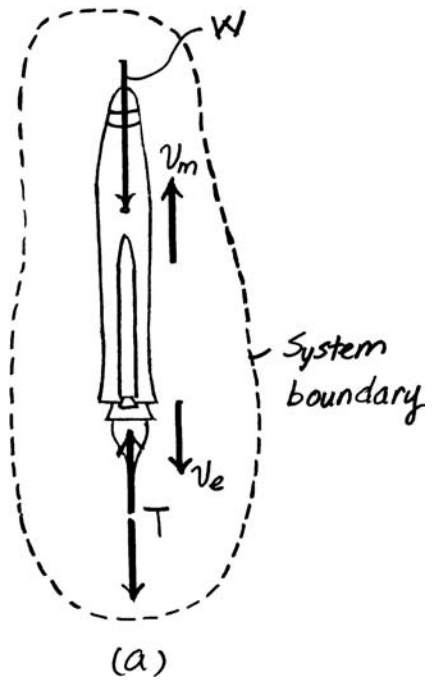

By referring to the free-body diagram of the missile system in Fig. *a*, notice that the pair of thrust **T** cancel each other since they are internal to the system. The mass of the missile at any instant t after lauch is given by $m = (1500 + 500) - 20t = (2000 - 20t)$kg. Thus, the weight at the same instant is $W = (2000 - 20t)(9.81)$.

$$+\uparrow \Sigma F_s = m\frac{dv}{dt} - v_{D/e}\frac{dm_e}{dt}; \qquad -(200-20t)(9.81) = (2000-20t)\frac{dv}{dt} - 2000(20)$$

$$a = \frac{dv}{dt} = \frac{2000}{100-t} - 9.81 \qquad \textbf{(1)}$$

The time taken for all the fuel to the consumed is $t = \frac{500}{20} = 25$ s. Substituting the result of t into Eq. (1),

$$a = \frac{2000}{100-25} - 9.81 = 16.9 \text{ m/s}^2\uparrow \qquad \textbf{Ans.}$$

Integrating Eq. (1),

$$\int_0^v dv = \int_0^{25\,s}\left(\frac{2000}{100-t} - 9.81\right)dt$$

$$v = \left(-2000\ln(100 - t) - 9.81t\right)\Big|_0^{25\text{ s}}$$

$$= 330 \text{ m/s} \qquad \textbf{Ans.}$$

© 2010 Pearson Education, Inc., Upper Saddle River, NJ. All rights reserved. This material is protected under all copyright laws as they currently exist. No portion of this material may be reproduced, in any form or by any means, without permission in writing from the publisher.

***15–124.** The rocket has a weight of 65 000 lb including the solid fuel. Determine the constant rate at which the fuel must be burned so that its thrust gives the rocket a speed of 200 ft/sin 10 s starting from rest. The fuel is expelled from the rocket at a relative speed of 3000 ft/s relative to the rocket. Neglect the effects of air resistance and assume that g is constant.

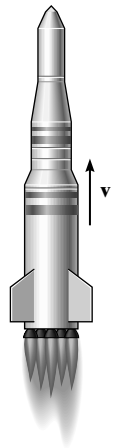

A System That Loses Mass: Here, $W = \left(m_0 - \frac{dm_r}{dt}t\right)g$. Applying Eq. 15–28, we have

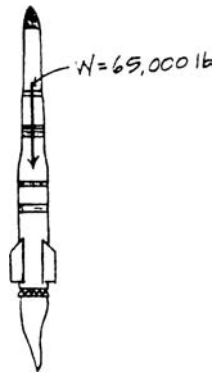

$$+\uparrow \Sigma F_s = m\frac{dv}{dt} - v_{D/e}\frac{dm_e}{dt};$$

$$-\left(m_0 - \frac{dm_e}{dt}t\right)g = \left(m_0 - \frac{dm_e}{dt}t\right)\frac{dv}{dt} - v_{D/e}\frac{dm_e}{dt}$$

$$\frac{dv}{dt} = \frac{v_{D/e}\frac{dm_e}{dt}}{m_0 - \frac{dm_e}{dt}t} - g$$

$$\int_0^v dv = \int_0^t \left(\frac{v_{D/e}\frac{dm_e}{dt}}{m_0 - \frac{dm_e}{dt}t} - g\right)dt$$

$$v = \left[-v_{D/e}\ln\left(m_0 - \frac{dm_e}{dt}t\right) - gt\right]\Big|_0^t$$

$$v = v_{D/e}\ln\left(\frac{m_0}{m_0 - \frac{dm_e}{dt}t}\right) - gt \qquad \textbf{[1]}$$

Substitute Eq. [1] with $m_0 = \frac{65\,000}{32.2} = 2018.63$ slug, $v_{D/e} = 3000$ ft/s, $v = 200$ ft/s and $t = 10\ s$, we have

$$200 = 3000\ln\left[\frac{2018.63}{2018.63 - \frac{dm_e}{dt}(10)}\right] - 32.2(10)$$

$$e^{0.174} = \frac{2018.63}{2018.63 - \frac{dm_e}{dt}(10)}$$

$$\frac{dm_e}{dt} = 32.2 \text{ slug/s} \qquad \textbf{Ans.}$$

© 2010 Pearson Education, Inc., Upper Saddle River, NJ. All rights reserved. This material is protected under all copyright laws as they currently exist. No portion of this material may be reproduced, in any form or by any means, without permission in writing from the publisher.

•15–125. The 10-Mg helicopter carries a bucket containing 500 kg of water, which is used to fight fires. If it hovers over the land in a fixed position and then releases 50 kg/s of water at 10 m/s, measured relative to the helicopter, determine the initial upward acceleration the helicopter experiences as the water is being released.

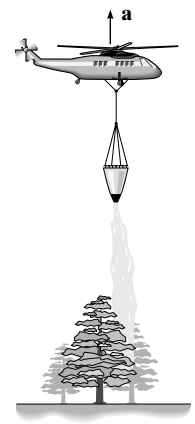

$$+\uparrow \Sigma F_t = m\frac{dv}{dt} - v_{D/e}\frac{dm_e}{dt}$$

Initially, the bucket is full of water, hence $m = 10(10^3) + 0.5(10^3) = 10.5(10^3)$ kg

$$0 = 10.5(10^3)a - (10)(50)$$

$$a = 0.0476 \text{ m/s}^2$$ **Ans.**

15–126. A plow located on the front of a locomotive scoops up snow at the rate of 10 ft^3/s and stores it in the train. If the locomotive is traveling at a constant speed of 12 ft/s, determine the resistance to motion caused by the shoveling. The specific weight of snow is $\gamma_s = 6$ lb/ft^3.

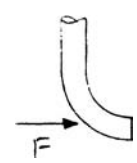

$$\Sigma F_x = m\frac{dv}{dt} + v_{D/t}\frac{dm_t}{dt}$$

$$F = 0 + (12 - 0)\left(\frac{10(6)}{32.2}\right)$$

$$F = 22.4 \text{ lb}$$ **Ans.**

15–127. The boat has a mass of 180 kg and is traveling forward on a river with a constant velocity of 70 km/h, measured *relative* to the river. The river is flowing in the opposite direction at 5 km/h. If a tube is placed in the water, as shown, and it collects 40 kg of water in the boat in 80 s, determine the horizontal thrust T on the tube that is required to overcome the resistance due to the water collection and yet maintain the constant speed of the boat. $\rho_w = 1$ Mg/m^3.

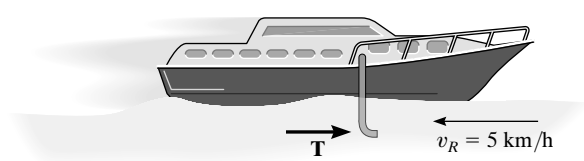

$$\frac{dm}{dt} = \frac{40}{80} = 0.5 \text{ kg/s}$$

$$v_{D/t} = (70)\left(\frac{1000}{3600}\right) = 19.444 \text{ m/s}$$

$$\Sigma F_s = m\frac{dv}{dt} + v_{D/i}\frac{dm_i}{dt}$$

$$T = 0 + 19.444(0.5) = 9.72 \text{ N}$$ **Ans.**

© 2010 Pearson Education, Inc., Upper Saddle River, NJ. All rights reserved. This material is protected under all copyright laws as they currently exist. No portion of this material may be reproduced, in any form or by any means, without permission in writing from the publisher.

***15–128.** The bin deposits gravel onto the conveyor belt at the rate of 1500 lb/min. If the speed of the belt is 5 ft/s, determine how much greater the tension in the top portion of the belt must be than that in the bottom portion in order to pull the belt forward.

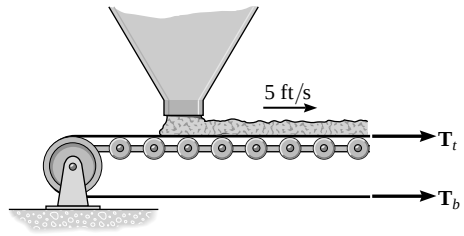

A System That Gains Mass: Here, $v_{D/t} = 5$ ft/s, $\frac{dv}{dt} = 0$ and $\frac{dm_t}{dt} = \left(\frac{1500\text{ lb}}{\text{min}}\right) \times \left(\frac{1\text{ slug}}{32.2\text{ lb}}\right) \times \left(\frac{1\text{ sin}}{60\text{ s}}\right) = 0.7764$ slug/s. Applying Eq. 15–29, we have

$$\xrightarrow{+} \Sigma F_s = m\frac{dv}{dt} + v_{D/t}\frac{dm_s}{dt}; \qquad T_t - T_b = 0 + 5(0.7764)$$

$$\Delta T = 3.88\text{ lb} \qquad \textbf{Ans.}$$

•15–129. The tractor together with the empty tank has a total mass of 4 Mg. The tank is filled with 2 Mg of water. The water is discharged at a constant rate of 50 kg/s with a constant velocity of 5 m/s, measured relative to the tractor. If the tractor starts from rest, and the rear wheels provide a resultant traction force of 250 N, determine the velocity and acceleration of the tractor at the instant the tank becomes empty.

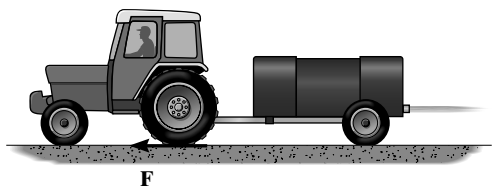

The free-body diagram of the tractor and water jet is shown in Fig. *a*. The pair of thrust **T** cancel each other since they are internal to the system. The mass of the tractor and the tank at any instant t is given by $m = (4000 + 2000) - 50t = (6000 - 50t)$kg.

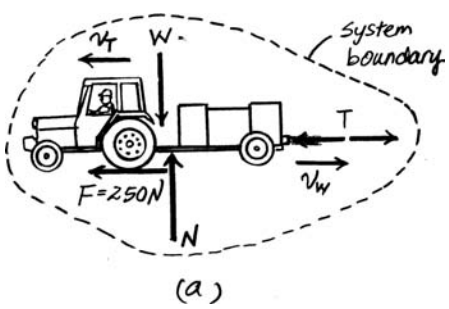

$$\xleftarrow{+} \Sigma F_s = m\frac{dv}{dt} - v_{D/e}\frac{dm_e}{dt}; \qquad 250 = (6000 - 50t)\frac{dv}{dt} - 5(50)$$

$$a = \frac{dv}{dt} = \frac{10}{120 - t} \qquad \textbf{(1)}$$

The time taken to empty the tank is $t = \frac{2000}{50} = 40$ s. Substituting the result of t into Eq. (1),

$$a = \frac{10}{120 - 40} = 0.125\text{m/s}^2 \qquad \textbf{Ans.}$$

Integrating Eq. (1),

$$\int_0^v dv = \int_0^{40\text{ s}} \frac{10}{120 - t}dt$$

$$v = -10\ln(120 - t)\Big|_0^{40\text{ s}}$$

$$= 4.05\text{ m/s} \qquad \textbf{Ans.}$$

© 2010 Pearson Education, Inc., Upper Saddle River, NJ. All rights reserved. This material is protected under all copyright laws as they currently exist. No portion of this material may be reproduced, in any form or by any means, without permission in writing from the publisher.

15–130. The second stage B of the two-stage rocket has a mass of 5 Mg (empty) and is launched from the first stage A with an initial velocity of 600 km/h. The fuel in the second stage has a mass of 0.7 Mg and is consumed at the rate of 4 kg/s. If it is ejected from the rocket at the rate of 3 km/s, measured relative to B, determine the acceleration of B at the instant the engine is fired and just before all the fuel is consumed. Neglect the effects of gravitation and air resistance.

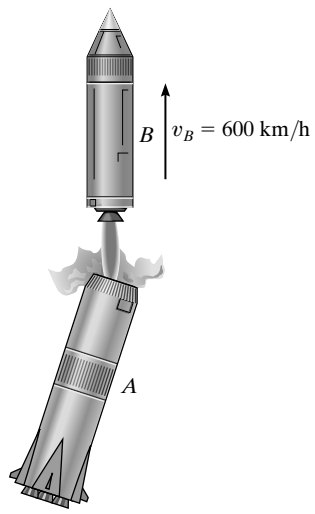

A System That Loses Mass: At the instant when stage B of rocket is launched, the total mass of the rocket is $m = 5000 + 5700$ kg. Applying Eq. 15–29, we have

$$\Sigma F_s = m\frac{dv}{dt} - v_{D/e}\frac{dm_e}{dt};$$

$$0 = (5700)\frac{dv}{dt} - 3\left(10^3\right)(4) \qquad a = \frac{dv}{dt} = 2.11 \text{ m/s}^2 \qquad \textbf{Ans.}$$

At the instant just before all the fuel being consumed, the mass of the rocket is $m = 5000$ kg. Applying Eq. 15–29, we have

$$\Sigma F_s = m\frac{dv}{dt} - v_{D/e}\frac{dm_e}{dt};$$

$$0 = (5000)\frac{dv}{dt} - 3\left(10^2\right)(4) \qquad a = \frac{dv}{dt} = 2.40 \text{ m/s}^2 \qquad \textbf{Ans.}$$

© 2010 Pearson Education, Inc., Upper Saddle River, NJ. All rights reserved. This material is protected under all copyright laws as they currently exist. No portion of this material may be reproduced, in any form or by any means, without permission in writing from the publisher.

15–131. The 12-Mg jet airplane has a constant speed of 950 km/h when it is flying along a horizontal straight line. Air enters the intake scoops S at the rate of 50 m^3/s. If the engine burns fuel at the rate of 0.4 kg/s and the gas (air and fuel) is exhausted relative to the plane with a speed of 450 m/s, determine the resultant drag force exerted on the plane by air resistance. Assume that air has a constant density of 1.22 kg/m^3. *Hint:* Since mass both enters and exits the plane, Eqs. 15–28 and 15–29 must be combined to yield.

$$\Sigma F_s = m\frac{dv}{dt} - v_{D/e}\frac{dm_e}{dt} + v_{D/i}\frac{dm_i}{dt}.$$

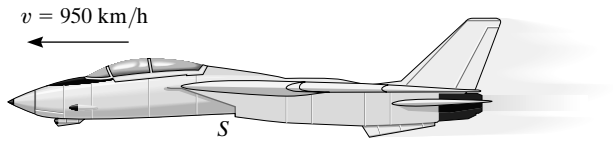

$$\Sigma F_s = m\frac{dv}{dt} - \frac{dm_e}{dt}(v_{D/E}) + \frac{dm_i}{dt}(v_{D/i}) \qquad \textbf{(1)}$$

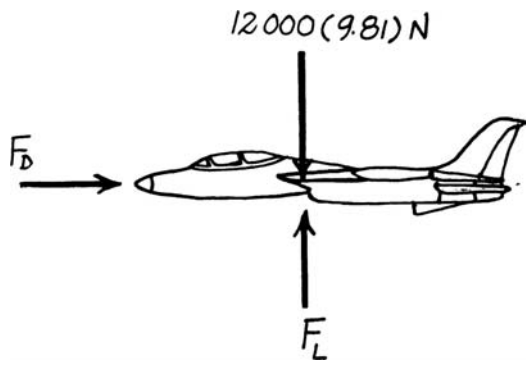

$$v = 950 \text{ km/h} = 0.2639 \text{ km/s}, \qquad \frac{dv}{dt} = 0$$

$$v_{D/E} = 0.45 \text{ km/s}$$

$$v_{D/t} = 0.2639 \text{ km/s}$$

$$\frac{dm_t}{dt} = 50(1.22) = 61.0 \text{ kg/s}$$

$$\frac{dm_e}{dt} = 0.4 + 61.0 = 61.4 \text{ kg/s}$$

Forces T and R are incorporated into Eq. (1) as the last two terms in the equation.

$$(\overset{+}{\leftarrow}) \quad -F_D = 0 - (0.45)(61.4) + (0.2639)(61)$$

$$F_D = 11.5 \text{ kN} \qquad \textbf{Ans.}$$

© 2010 Pearson Education, Inc., Upper Saddle River, NJ. All rights reserved. This material is protected under all copyright laws as they currently exist. No portion of this material may be reproduced, in any form or by any means, without permission in writing from the publisher.

***15–132.** The cart has a mass M and is filled with water that has a mass m_0. If a pump ejects the water through a nozzle having a cross-sectional area A at a constant rate of v_0 relative to the cart, determine the velocity of the cart as a function of time. What is the maximum speed of the cart assuming all the water can be pumped out? The frictional resistance to forward motion is F. The density of the water is ρ.

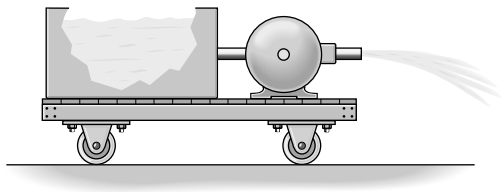

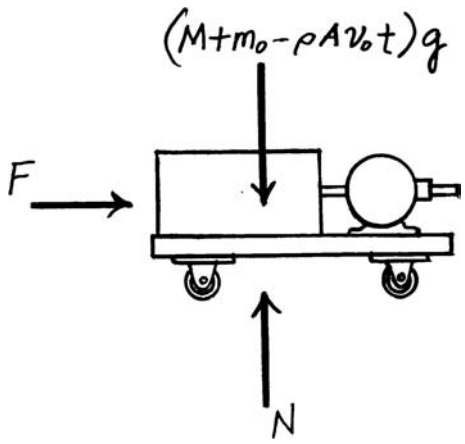

$$\overset{+}{\leftarrow} \Sigma F_s = m\frac{dv}{dt} - v_{D/e}\left(\frac{dm_e}{dt}\right)$$

$$\frac{dm_e}{dt} = \rho A v_0$$

$$-F = (M + m_0 - \rho A v_0 t)\frac{dv}{dt} - v_0(\rho A v_0)$$

$$\int_0^t \frac{dt}{M + m_0 - \rho A v_0 t} = \int_0^v \frac{dv}{\rho A v_0^2 - F}$$

$$-\left(\frac{1}{\rho A v_0}\right)\ln(M + m_0) = \rho A v_0 t) + \left(\frac{1}{\rho A v_0}\right)\ln(M + m_0) = \frac{v}{\rho A v_0^2 - F}$$

$$\left(\frac{1}{\rho A v_0}\right)\ln\left(\frac{M + m_0}{M + m_0 - \rho A v_0 t}\right) = \frac{v}{\rho A v_0^2 - F}$$

$$v = \left(\frac{\rho A v_0^2 - F}{\rho A v_0}\right)\ln\left(\frac{M + m_0}{M + m_0 - \rho A v_0 t}\right) \qquad \textbf{Ans.}$$

v_{max} occurs when $t = \dfrac{m_0}{\rho A v_0}$, or,

$$v_{max} = \left(\frac{\rho A v_0^2 - F}{\rho A v_0}\right)\ln\left(\frac{M + m_0}{M}\right) \qquad \textbf{Ans.}$$

•15–133. The truck has a mass of 50 Mg when empty. When it is unloading 5 m^3 of sand at a constant rate of 0.8 m^3/s, the sand flows out the back at a speed of 7 m/s, measured relative to the truck, in the direction shown. If the truck is free to roll, determine its initial acceleration just as the sand begins to fall out. Neglect the mass of the wheels and any frictional resistance to motion. The density of sand is $\rho_s = 1520\ kg/m^3$.

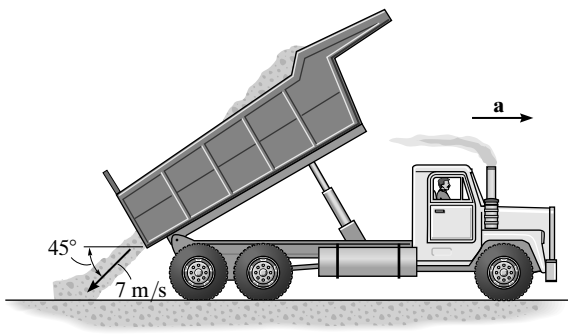

A System That Loses Mass: Initially, the total mass of the truck is $m = 50(10^3) + 5(1520) = 57.6(10^3)$ kg and $\dfrac{dm_e}{dt} = 0.8(1520) = 1216$ kg/s. Applying Eq. 15–29, we have

$$\overset{+}{\rightarrow} \Sigma F_s = m\frac{dv}{dt} - v_{D/e}\frac{dm_e}{dt}; \quad 0 = 57.6(10^3)a - (0.8\cos 45°)(1216)$$

$$a = 0.104\ m/s^2 \qquad \textbf{Ans.}$$

© 2010 Pearson Education, Inc., Upper Saddle River, NJ. All rights reserved. This material is protected under all copyright laws as they currently exist. No portion of this material may be reproduced, in any form or by any means, without permission in writing from the publisher.

15–134. The truck has a mass m_0 and is used to tow the smooth chain having a total length l and a mass per unit of length m'. If the chain is originally piled up, determine the tractive force **F** that must be supplied by the rear wheels of the truck necessary to maintain a constant speed v while the chain is being drawn out.

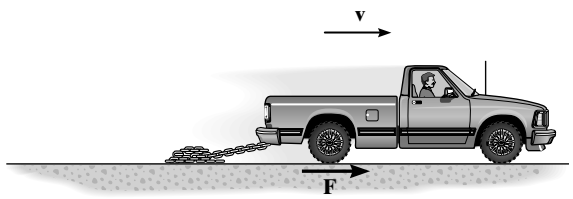

A System That Loses Mass: Here, $v_{D/t} = v$, $\frac{dv}{dt} = 0$ and $\frac{dm_t}{dt} = m'v$. Applying Eq. 15–29, we have

$$\xrightarrow{+} \Sigma F_S = m\frac{dv}{dt} + v_{D/t}\frac{dm_t}{dt}; \qquad F = 0 + v(m'v) = m'v^2 \qquad \textbf{Ans.}$$

15–135. The chain has a total length $L < d$ and a mass per unit length of m'. If a portion h of the chain is suspended over the table and released, determine the velocity of its end A as a function of its position y. Neglect friction.

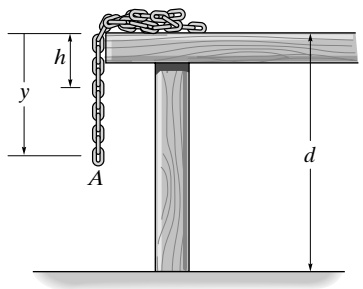

$$\Sigma F_s = m\frac{dv}{dt} + v_{D/e}\frac{dm_e}{dt}$$

$$m'gy = m'y\frac{dv}{dt} + v(m'v)$$

$$m'gy = m'\left(y\frac{dv}{dt} + v^2\right)$$

Since $dt = \frac{dy}{v}$, we have

$$gy = vy\frac{dv}{dy} + v^2$$

Multiply by $2y$ and integrate:

$$\int 2gy^2\,dy = \int\left(2vy^2\frac{dv}{dy} + 2yv^2\right)dy$$

$$\frac{2}{3}g^3y^3 + C = v^2y^2$$

when $v = 0$, $y = h$, so that $C = -\frac{2}{3}gh^3$

Thus, $v^2 = \frac{2}{3}g\left(\frac{y^3 - h^3}{y^2}\right)$

$$v = \sqrt{\frac{2}{3}g\left(\frac{y^3 - h^3}{y^2}\right)} \qquad \textbf{Ans.}$$

© 2010 Pearson Education, Inc., Upper Saddle River, NJ. All rights reserved. This material is protected under all copyright laws as they currently exist. No portion of this material may be reproduced, in any form or by any means, without permission in writing from the publisher.

***15–136.** A commercial jet aircraft has a mass of 150 Mg and is cruising at a constant speed of 850 km/h in level flight ($\theta = 0°$). If each of the two engines draws in air at a rate of 1000 kg/s and ejects it with a velocity of 900 m/s, relative to the aircraft, determine the maximum angle of inclination θ at which the aircraft can fly with a constant speed of 750 km/h. Assume that air resistance (drag) is proportional to the square of the speed, that is, $F_D = cv^2$, where c is a constant to be determined. The engines are operating with the same power in both cases. Neglect the amount of fuel consumed.

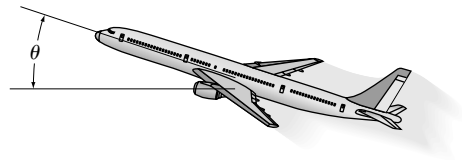

Steady Flow Equation: Since the air is collected from a large source (the atmosphere), its entrance speed into the engine is negligible. The exit speed of the air from the engine is given by

$$v_e = v_p + v_{e/p}$$

When the airplane is in level flight, it has a constant speed of $v_p = \left[850(10^3)\,\frac{\text{m}}{\text{h}}\right]\left(\frac{1\text{ h}}{3600\text{ s}}\right) = 236.11\text{m/s}$. Thus,

$$\left(\overset{+}{\rightarrow}\right) \qquad v_e = -236.11 + 900 = 663.89\text{ m/s} \rightarrow$$

By referring to the free-body diagram of the airplane shown in Fig. *a*,

$$\left(\overset{+}{\rightarrow}\right)\Sigma F_x = \frac{dm}{dt}\left[\left(v_B\right)_x - \left(v_A\right)_x\right]; \qquad C(236.11^2) = 2(1000)(663.89 - 0)$$

$$C = 23.817\text{ kg}\cdot\text{s/m}$$

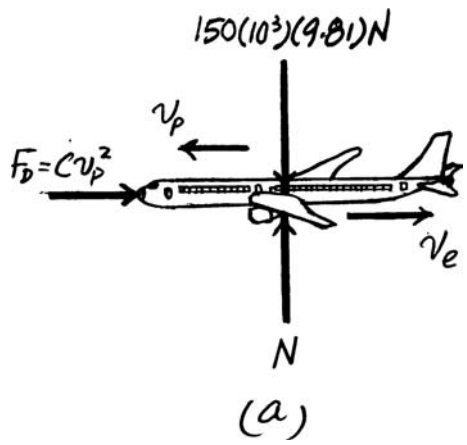

When the airplane is in the inclined position, it has a constant speed of $v_p = \left[750\left(10^3\right)\frac{\text{m}}{\text{h}}\right]\left(\frac{1\text{ h}}{3600\text{ s}}\right) = 208.33\text{ m/s}$. Thus,

$$v_e = -208.33 + 900 = 691.67\text{ m/s}$$

By referring to the free-body diagram of the airplane shown in Fig. *b* and using the result of C, we can write

$$\nwarrow + \Sigma F_{x'} = \frac{dm}{dt}\left[\left(v_B\right)_{x'} - \left(v_A\right)_{x'}\right]; \qquad 23.817\left(208.33^2\right) + 150\left(10^3\right)(9.81)\sin\theta = 2(1000)(691.67 - 0)$$

$$\theta = 13.7° \qquad \textbf{Ans.}$$

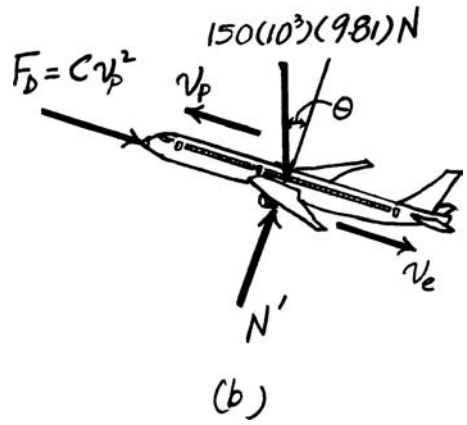

© 2010 Pearson Education, Inc., Upper Saddle River, NJ. All rights reserved. This material is protected under all copyright laws as they currently exist. No portion of this material may be reproduced, in any form or by any means, without permission in writing from the publisher.

•15–137. A coil of heavy open chain is used to reduce the stopping distance of a sled that has a mass M and travels at a speed of v_0. Determine the required mass per unit length of the chain needed to slow down the sled to $(1/2)v_0$ within a distance $x = s$ if the sled is hooked to the chain at $x = 0$. Neglect friction between the chain and the ground.

Observing the free-body diagram of the system shown in Fig. a, notice that the pair of forces **F,** which develop due to the change in momentum of the chain, cancel each other since they are internal to the system. Here, $v_{D/s} = v$ since the chain on the ground is at rest. The rate at which the system gains mass is $\frac{dm_s}{dt} = m'v$ and the mass of the system is $m = m'x + M$. Referring to Fig. a,

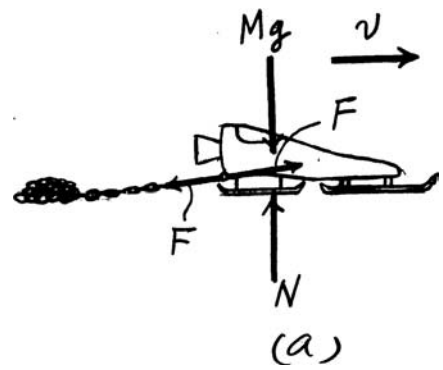

$$\left(\overset{+}{\rightarrow}\right)\Sigma F_s = m\frac{dv}{dt} + v_{D/s}\frac{dm_s}{dt}; \qquad 0 = \left(m'x + M\right)\frac{dv}{dt} + v\left(m'v\right)$$

$$0 = \left(m'x + M\right)\frac{dv}{dt} + m'v^2 \qquad \textbf{(1)}$$

Since $\frac{dx}{dt} = v$ or $dt = \frac{dx}{v}$,

$$\left(m'x + M\right)v\frac{dv}{dx} + m'v^2 = 0$$

$$\frac{dv}{v} = -\left(\frac{m'}{m'x + M}\right)dx \qquad \textbf{(2)}$$

Integrating using the limit $v = v_0$ at $x = 0$ and $v = \frac{1}{2}v_0$ at $x = s$,

$$\int_{v_0}^{\frac{1}{2}v_0}\frac{dv}{v} = -\int_0^s\left(\frac{m'}{m'x + M}\right)dx$$

$$1\text{n}\, v\Big|_{v_0}^{\frac{1}{2}v_0} = -1\text{n}\left(m'x + M\right)\Big|_0^s$$

$$\frac{1}{2} = \frac{M}{m's + M}$$

$$m' = \frac{M}{s} \qquad \textbf{Ans.}$$

© 2010 Pearson Education, Inc., Upper Saddle River, NJ. All rights reserved. This material is protected under all copyright laws as they currently exist. No portion of this material may be reproduced, in any form or by any means, without permission in writing from the publisher.

15–138. The car is used to scoop up water that is lying in a trough at the tracks. Determine the force needed to pull the car forward at constant velocity **v** for each of the three cases. The scoop has a cross-sectional area A and the density of water is ρ_w.

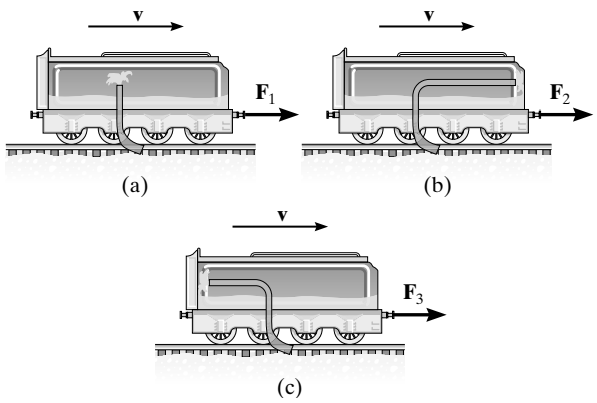

The system consists of the car and the scoop. In all cases

$$\Sigma F_t = m\frac{dv}{dt} - v_{D/e}\frac{dm_e}{dt}$$

$$F = 0 - v(\rho)(A)\,v$$

$$F = v^2\,\rho\,A$$ **Ans.**

15–139. A rocket has an empty weight of 500 lb and carries 300 lb of fuel. If the fuel is burned at the rate of 1.5 lb/s and ejected with a velocity of 4400 ft/s relative to the rocket, determine the maximum speed attained by the rocket starting from rest. Neglect the effect of gravitation on the rocket.

$$+\uparrow \Sigma F_s = \frac{dv}{dt} - v_{D/e}\frac{dm_e}{dt}$$

At a time t, $m = m_0 - ct$, where $c = \frac{dm_e}{dt}$. In space the weight of the rocket is zero.

$$0 = (m_0 - ct)\frac{dv}{dt} - v_{D/e}c$$

$$\int_0^v dv = \int_0^t \left(\frac{cv_{D/e}}{m_0 - ct}\right)dt$$

$$v = v_{D/e}\,\ln\left(\frac{m_0}{m_0 - ct}\right) \qquad \textbf{[1]}$$

The maximum speed occurs when all the fuel is consumed, that is, when $t = \frac{300}{15} = 20$ s.

Here, $m_0 = \frac{500 + 300}{32.2} = 24.8447$ slug, $c = \frac{15}{32.2} = 0.4658$ slug/s, $v_{D/e} = 4400$ ft/s.

Substitute the numerical into Eq. [1]:

$$v_{\max} = 4400\,\ln\left(\frac{24.8447}{24.8447 - (0.4658(20))}\right)$$

$$v_{\max} = 2068 \text{ ft/s}$$ **Ans.**

© 2010 Pearson Education, Inc., Upper Saddle River, NJ. All rights reserved. This material is protected under all copyright laws as they currently exist. No portion of this material may be reproduced, in any form or by any means, without permission in writing from the publisher.

***15–140.** Determine the magnitude of force **F** as a function of time, which must be applied to the end of the cord at A to raise the hook H with a constant speed $v = 0.4$ m/s. Initially the chain is at rest on the ground. Neglect the mass of the cord and the hook. The chain has a mass of 2 kg/m.

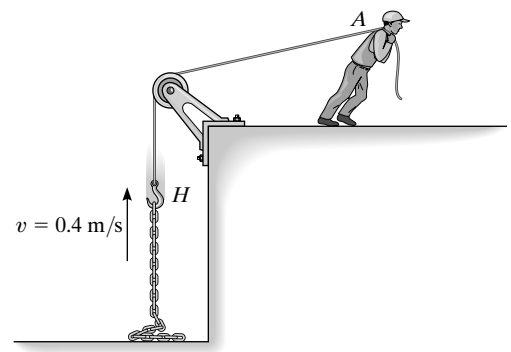

$$\frac{dv}{dt} = 0, \qquad y = vt$$

$$m_i = my = mvt$$

$$\frac{dm_i}{dt} = mv$$

$$+\uparrow \Sigma F_s = m\frac{dv}{dt} + v_{D/i}\left(\frac{dm_i}{dt}\right)$$

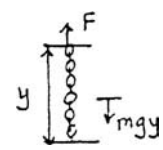

$$F - mgvt = 0 + v(mv)$$

$$F = m(gvt + v^2)$$

$$= 2[9.81(0.4)t + (0.4)^2]$$

$$F = (7.85t + 0.320)\text{ N}$$ **Ans.**

•15–141. The earthmover initially carries 10 m^3 of sand having a density of 1520 kg/m^3. The sand is unloaded horizontally through a 2.5-m^2 dumping port P at a rate of 900 kg/s measured relative to the port. If the earthmover maintains a constant resultant tractive force $F = 4$ kN at its front wheels to provide forward motion, determine its acceleration when half the sand is dumped. When empty, the earthmover has a mass of 30 Mg. Neglect any resistance to forward motion and the mass of the wheels. The rear wheels are free to roll.

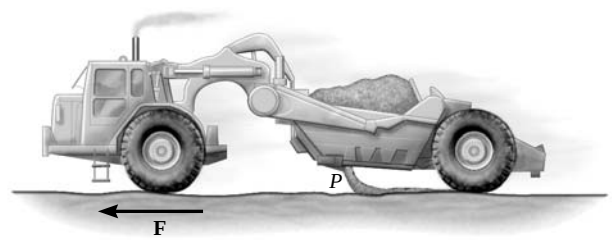

When half the sand remains,

$$m = 30\,000 + \frac{1}{2}(10)(1520) = 37\,600\text{ kg}$$

$$\frac{dm}{dt} = 900\text{ kg/s} = \rho\, v_{D/e}A$$

$$900 = 1520(v_{D/e})(2.5)$$

$$v_{D/e} = 0.237\text{ m/s}$$

$$a = \frac{dv}{dt} = 0.1$$

$$\overset{+}{\leftarrow} \Sigma F_s = m\frac{dv}{dt} - \frac{dm}{dt}v$$

$$F = 37\,600(0.1) - 900(0.237)$$

$$F = 3.55\text{ kN}$$ **Ans.**

© 2010 Pearson Education, Inc., Upper Saddle River, NJ. All rights reserved. This material is protected under all copyright laws as they currently exist. No portion of this material may be reproduced, in any form or by any means, without permission in writing from the publisher.

15–142. The earthmover initially carries $10\ \text{m}^3$ of sand having a density of $1520\ \text{kg/m}^3$. The sand is unloaded horizontally through a 2.5-m^2 dumping port P at a rate of $900\ \text{kg/s}$ measured relative to the port. Determine the resultant tractive force **F** at its front wheels if the acceleration of the earthmover is $0.1\ \text{m/s}^2$ when half the sand is dumped. When empty, the earthmover has a mass of 30 Mg. Neglect any resistance to forward motion and the mass of the wheels. The rear wheels are free to roll.

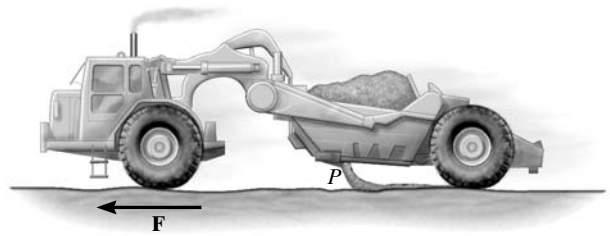

When half the sand remains,

$$m = 30\,000 + \frac{1}{2}(10)(1520) = 37\,600\ \text{kg}$$

$$\frac{dm}{dt} = 900\ \text{kg/s} = \rho\, v_{D/e}\, A$$

$$900 = 1520(v_{D/e})(2.5)$$

$$v_{D/e} = 0.237\ \text{m/s}$$

$$a = \frac{dv}{dt} = 0.1$$

$$\overset{+}{\leftarrow} \Sigma F_s = m\frac{dv}{dt} - \frac{dm}{dt}\text{v}$$

$$F = 37\,600(0.1) - 900(0.237)$$

$$F = 3.55\ \text{kN}$$ **Ans.**

© 2010 Pearson Education, Inc., Upper Saddle River, NJ. All rights reserved. This material is protected under all copyright laws as they currently exist. No portion of this material may be reproduced, in any form or by any means, without permission in writing from the publisher.

15–143. The jet is traveling at a speed of 500 mi/h, 30° with the horizontal. If the fuel is being spent at 3 lb/s, and the engine takes in air at 400 lb/s, whereas the exhaust gas (air and fuel) has a relative speed of 32 800 ft/s, determine the acceleration of the plane at this instant. The drag resistance of the air is $F_D = (0.7v^2)$ lb, where the speed is measured in ft/s. The jet has a weight of 15 000 lb. *Hint:* See Prob. 15–131.

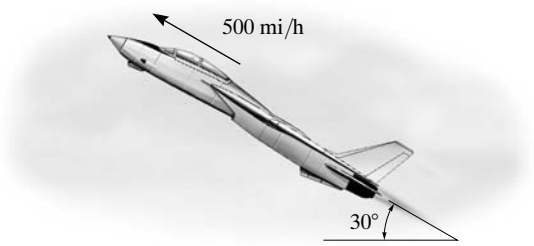

$$\frac{dm_i}{dt} = \frac{400}{32.2} = 12.42 \text{ slug/s}$$

$$\frac{dm_e}{dt} = \frac{403}{32.2} = 12.52 \text{ slug/s}$$

$$v = v_{D/i} = 500 \text{ mi/h} = 733.3 \text{ ft/s}$$

$$\nwarrow + \Sigma F_s = m\frac{dv}{dt} - v_{D/e}\frac{dm_e}{dt} + v_{D/i}\frac{dm_i}{dt}$$

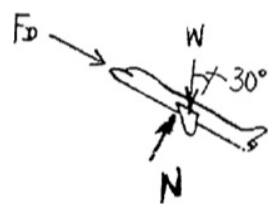

$$-(15\,000)\sin 30° - 0.7(733.3)^2 = \frac{15\,000}{32.2}\frac{dv}{dt} - 32\,800(12.52) + 733.3(12.42)$$

$$a = \frac{dv}{dt} = 37.5 \text{ ft/s}^2$$ **Ans.**

© 2010 Pearson Education, Inc., Upper Saddle River, NJ. All rights reserved. This material is protected under all copyright laws as they currently exist. No portion of this material may be reproduced, in any form or by any means, without permission in writing from the publisher.

***15–144.** The rocket has an initial mass m_0, including the fuel. For practical reasons desired for the crew, it is required that it maintain a constant upward acceleration a_0. If the fuel is expelled from the rocket at a relative speed $v_{e/r}$ determine the rate at which the fuel should be consumed to maintain the motion. Neglect air resistance, and assume that the gravitational acceleration is constant.

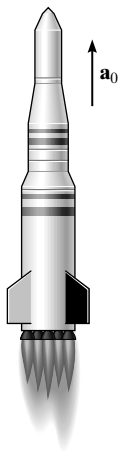

$$a_0 = \frac{dv}{dt}$$

$$+\uparrow \Sigma F_s = m\frac{dv}{dt} - \mathbf{v}_{D/e}\frac{dm_e}{dt}$$

$$-mg = ma_0 - v_{e/r}\frac{dm}{dt}$$

$$v_{e/r}\frac{dm}{m} = (a_0 + g)\,dt \qquad \textbf{(1)}$$

Since $v_{c/r}$ is constant, integrating, with $t = 0$ when $m = m_0$ yields

$$v_{e/r}\ln\left(\frac{m}{m_0}\right) = (a_0 + g)t$$

$$\frac{m}{m_0} = e^{[(a_0+g)/v_{e/r}]t}$$

The time rate of fuel consumption is determined from Eq. (1).

$$\frac{dm}{dt} = m\left(\frac{(a_0 + g)}{v_{e/r}}\right)$$

$$\frac{dm}{dt} = m_0\left(\frac{(a_0 + g)}{v_{e/r}}\right)e^{[(a_0+g)v_{e/r}]t} \qquad \textbf{Ans.}$$

Note: $v_{c/r}$ must be considered a negative quantity.

© 2010 Pearson Education, Inc., Upper Saddle River, NJ. All rights reserved. This material is protected under all copyright laws as they currently exist. No portion of this material may be reproduced, in any form or by any means, without permission in writing from the publisher.

•15–145. If the chain is lowered at a constant speed, determine the normal reaction exerted on the floor as a function of time. The chain has a weight of 5 lb/ft and a total length of 20 ft.

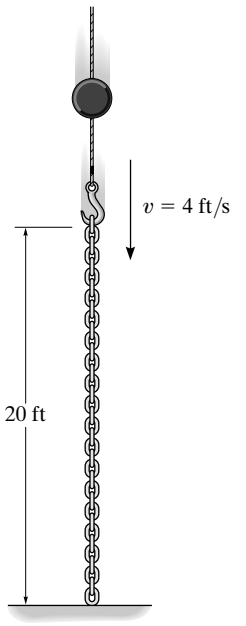

At time t, the weight of the chain on the floor is $W = mg(vt)$

$$\frac{dv}{dt} = 0, \qquad m_i = m(vt)$$

$$\frac{dm_i}{dt} = mv$$

$$\Sigma F_s = m\frac{dv}{dt} + v_{D/i}\frac{dm_i}{dt}$$

$$R - mg(vt) = 0 + v(mv)$$

$$R = m(gvt + v^2)$$

$$R = \frac{5}{32.2}(32.2(4)(t) + (4)^2)$$

$$R = (20t + 2.48)\text{ lb}$$ **Ans.**

© 2010 Pearson Education, Inc., Upper Saddle River, NJ. All rights reserved. This material is protected under all copyright laws as they currently exist. No portion of this material may be reproduced, in any form or by any means, without permission in writing from the publisher.

R1–1. The ball is thrown horizontally with a speed of 8 m/s. Find the equation of the path, $y = f(x)$, and then determine the ball's velocity and the normal and tangential components of acceleration when $t = 0.25$ s.

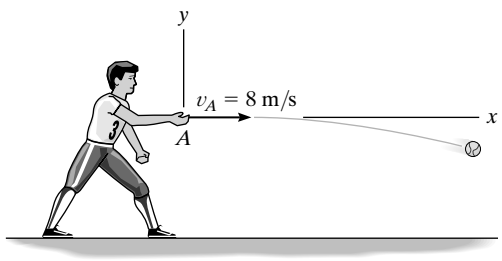

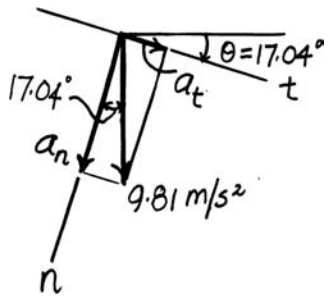

Horizontal Motion: The horizontal component of velocity is $v_x = 8$ m/s and the initial horizontal position is $(s_0)_x = 0$.

$(\xrightarrow{+})$ $$s_x = (s_0)_x + (v_0)_x t$$

$$x = 0 + 8t \qquad \textbf{[1]}$$

Vertical Motion: The vertical component of initial velocity $(v_0)_y = 0$ and the initial vertical position are $(s_0)_y = 0$.

$(+\uparrow)$ $$s_y = (s_0)_y + (v_0)_y t + \frac{1}{2}(a_c)_y t^2$$

$$y = 0 + 0 + \frac{1}{2}(-9.81)t^2 \qquad \textbf{[2]}$$

Eliminate t from Eqs. [1] and [2] yields

$$y = -0.0766x^2 \qquad \textbf{Ans.}$$

The vertical component of velocity when $t = 0.25$ s is given by

$(+\uparrow)$ $$v_y = (v_0)_y + (a_c)_y t$$

$$v_y = 0 + (-9.81)(0.25) = -2.4525 \text{ m/s} = 2.4525 \text{ m/s} \downarrow$$

The magnitude and direction angle when $t = 0.25$ s are

$$v = \sqrt{v_x^2 + v_y^2} = \sqrt{8^2 + 2.4525^2} = 8.37 \text{ m/s} \qquad \textbf{Ans.}$$

$$\theta = \tan^{-1}\frac{v_y}{v_x} = \tan^{-1}\frac{2.4525}{8} = 17.04° = 17.0° \searrow \qquad \textbf{Ans.}$$

Since the velocity is always directed along the tangent of the path and the acceleration $a = 9.81$ m/s^2 is directed downward, then tangential and normal components of acceleration are

$$a_t = 9.81 \sin 17.04° = 2.88 \text{ m/s}^2 \qquad \textbf{Ans.}$$

$$a_n = 9.81 \cos 17.04° = 9.38 \text{ m/s}^2 \qquad \textbf{Ans.}$$

© 2010 Pearson Education, Inc., Upper Saddle River, NJ. All rights reserved. This material is protected under all copyright laws as they currently exist. No portion of this material may be reproduced, in any form or by any means, without permission in writing from the publisher.

R1–2. Cartons having a mass of 5 kg are required to move along the assembly line with a constant speed of 8 m/s. Determine the smallest radius of curvature, ρ, for the conveyor so the cartons do not slip. The coefficients of static and kinetic friction between a carton and the conveyor are $\mu_s = 0.7$ and $\mu_k = 0.5$, respectively.

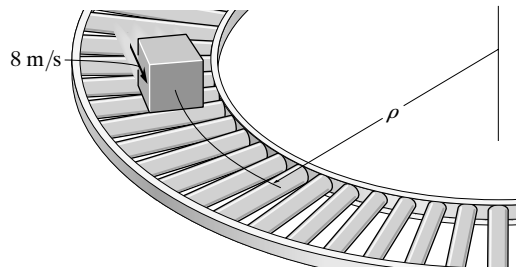

$+\uparrow \Sigma F_b = m\,a_b; \qquad N - W = 0$

$N = W$

$F_s = 0.7W$

$\overset{+}{\rightarrow} \Sigma F_n = m\,a_n; \qquad 0.7W = \dfrac{W}{9.81}\left(\dfrac{8^2}{\rho}\right)$

$\rho = 9.32 \text{ m}$ **Ans.**

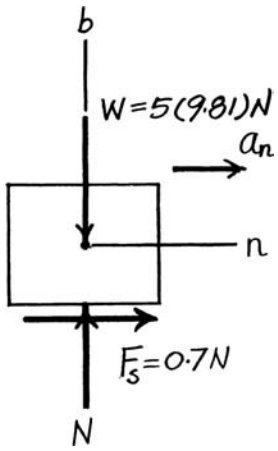

R1–3. A small metal particle travels downward through a fluid medium while being subjected to the attraction of a magnetic field such that its position is $s = (15t^3 - 3t)$ mm, where t is in seconds. Determine (a) the particle's displacement from $t = 2$ s to $t = 4$ s, and (b) the velocity and acceleration of the particle when $t = 5$ s.

a) $s = 15t^3 - 3t$

At $t = 2$ s, $s_1 = 114$ mm

At $t = 4$ s, $s_3 = 948$ mm

$\Delta s = 948 - 114 = 834$ mm **Ans.**

b) $v = \dfrac{ds}{dt} = 45t^2 - 3\Big|_{t=5} = 1122 \text{ mm/s} = 1.12 \text{ m/s}$ **Ans.**

$a = \dfrac{dv}{dt} = 90t\Big|_{t=5} = 450 \text{ mm/s}^2 = 0.450 \text{ m/s}^2$ **Ans.**

© 2010 Pearson Education, Inc., Upper Saddle River, NJ. All rights reserved. This material is protected under all copyright laws as they currently exist. No portion of this material may be reproduced, in any form or by any means, without permission in writing from the publisher.

***R1–4.** The flight path of a jet aircraft as it takes off is defined by the parametric equations $x = 1.25t^2$ and $y = 0.03t^3$, where t is the time after take-off, measured in seconds, and x and y are given in meters. If the plane starts to level off at $t = 40$ s, determine at this instant (a) the horizontal distance it is from the airport, (b) its altitude, (c) its speed, and (d) the magnitude of its acceleration.

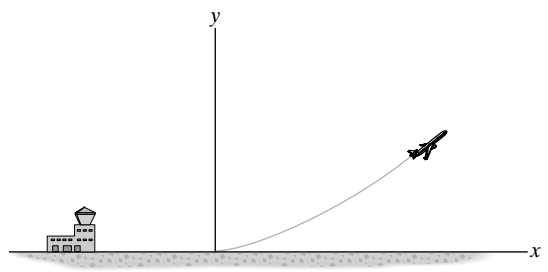

Position: When $t = 40\ s$, its horizontal position is given by

$$x = 1.25\left(40^2\right) = 2000 \text{ m} = 2.00 \text{ km} \qquad \textbf{Ans.}$$

and its altitude is given by

$$y = 0.03\left(40^3\right) = 1920 \text{ m} = 1.92 \text{ km} \qquad \textbf{Ans.}$$

Velocity: When $t = 40$ s, the horizontal component of velocity is given by

$$v_x = \dot{x} = 2.50t\big|_{t=40\text{ s}} = 100 \text{ m/s}$$

The vertical component of velocity is

$$v_y = \dot{y} = 0.09t^2\big|_{t=40\text{ s}} = 144 \text{ m/s}$$

Thus, the plane's speed at $t = 40$ s is

$$v_y = \sqrt{v_x^2 + v_y^2} = \sqrt{100^2 + 144^2} = 175 \text{ m/s} \qquad \textbf{Ans.}$$

Acceleration: The horizontal component of acceleration is

$$a_x = \ddot{x} = 2.50 \text{ m/s}^2$$

and the vertical component of acceleration is

$$a_y = \ddot{y} = 0.18t\big|_{t=40\text{ s}} = 7.20 \text{ m/s}^2$$

Thus, the magnitude of the plane's acceleration at $t = 40$ s is

$$a = \sqrt{a_x^2 + a_y^2} = \sqrt{2.50^2 + 7.20^2} = 7.62 \text{ m/s}^2 \qquad \textbf{Ans.}$$

© 2010 Pearson Education, Inc., Upper Saddle River, NJ. All rights reserved. This material is protected under all copyright laws as they currently exist. No portion of this material may be reproduced, in any form or by any means, without permission in writing from the publisher.

R1–5. The boy jumps off the flat car at A with a velocity of $v' = 4$ ft/s relative to the car as shown. If he lands on the second flat car B, determine the final speed of both cars after the motion. Each car has a weight of 80 lb. The boy's weight is 60 lb. Both cars are originally at rest. Neglect the mass of the car's wheels.

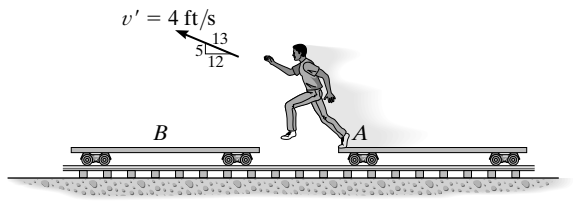

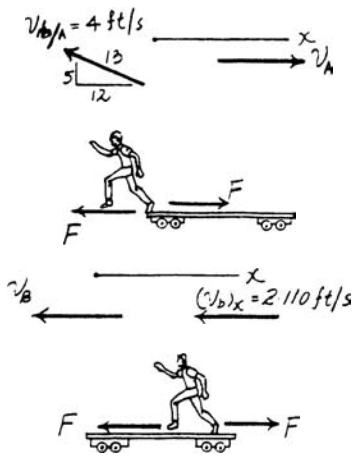

Relative Velocity: The horizontal component of the relative velocity of the boy with respect to the car A is $(v_{b/A})_x = 4\left(\frac{12}{13}\right) = 3.692$ ft/s. Thus, the horizontal component of the velocity of the boy is

$$(v_b)_x = v_A + (v_{b/A})_x$$

$$(\overset{+}{\leftarrow}) \qquad (v_b)_x = -v_A + 3.692 \qquad \textbf{[1]}$$

Conservation of Linear Momentum: If we consider the boy and the car as a system, then the impulsive force caused by traction of the shoes is *internal* to the system. Therefore, they will cancel out. As the result, the linear momentum is conserved along x axis. For car A

$$0 = m_b(v_b)_x + m_A v_A$$

$$(\overset{+}{\leftarrow}) \qquad 0 = \left(\frac{60}{32.2}\right)(v_b)_x + \left(\frac{80}{32.2}\right)(-v_A) \qquad \textbf{[2]}$$

Solving Eqs. [1] and [2] yields

$$v_A = 1.58 \text{ ft/s} \qquad \textbf{Ans.}$$

$$(v_b)_x = 2.110 \text{ ft/s}$$

For car B

$$m_b\,(v_b)_x = (m_b + m_B)v_B$$

$$(\overset{+}{\leftarrow}) \qquad \left(\frac{60}{32.2}\right)(2.110) = \left(\frac{60+80}{32.2}\right)v_B$$

$$v_B = 0.904 \text{ ft/s} \qquad \textbf{Ans.}$$

© 2010 Pearson Education, Inc., Upper Saddle River, NJ. All rights reserved. This material is protected under all copyright laws as they currently exist. No portion of this material may be reproduced, in any form or by any means, without permission in writing from the publisher.

R1-6. The man A has a weight of 175 lb and jumps from rest at a height $h = 8$ ft onto a platform P that has a weight of 60 lb. The platform is mounted on a spring, which has a stiffness $k = 200$ lb/ft. Determine (a) the velocities of A and P just after impact and (b) the maximum compression imparted to the spring by the impact. Assume the coefficient of restitution between the man and the platform is $e = 0.6$, and the man holds himself rigid during the motion.

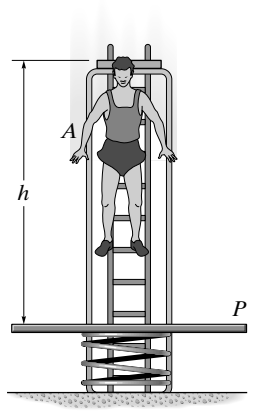

Conservation of Energy: The datum is set at the initial position of platform P. When the man falls from a height of 8 ft *above* the datum, his initial gravitational potential energy is $175(8) = 1400$ ft · lb. Applying Eq. 14–21, we have

$$T_1 + V_1 = T_2 + V_2$$

$$0 + 1400 = \frac{1}{2}\left(\frac{175}{32.2}\right)(v_M)_1^2 + 0$$

$$(v_H)_1 = 22.70 \text{ ft/s}$$

Conservation of Momentum:

$$m_M(v_M)_1 + m_P(v_P)_1 = m_M(v_M)_2 + m_p(v_p)_2$$

$$(+\downarrow) \qquad \left(\frac{175}{32.2}\right)(22.70) + 0 = \left(\frac{175}{32.2}\right)(v_M)_2 + \left(\frac{60}{32.2}\right)(v_p)_2 \qquad \textbf{[1]}$$

Coefficient of Restitution:

$$e = \frac{(v_P)_2 - (v_M)_2}{(v_M)_1 - (v_p)_1}$$

$$(+\downarrow) \qquad 0.6 = \frac{(v_P)_2 - (v_P)_2}{22.70 - 0} \qquad \textbf{[2]}$$

Solving Eqs. [1] and [2] yields

$$(v_p)_2 = 27.04 \text{ ft/s} \downarrow = 27.0 \text{ ft/s} \downarrow \qquad (v_M)_2 = 13.4 \text{ ft/s} \downarrow \qquad \textbf{Ans.}$$

Conservation of Energy: The datum is set at the spring's compressed position. Initially, the spring has been compressed $\frac{60}{200} = 0.3$ ft and the elastic potential energy is $\frac{1}{2}(200)\left(0.3^2\right) = 9.00$ ft · lb. When platform P is at a height of s *above* the datum, its initial gravitational potential energy is $60s$. When platform P stops momentary, the spring has been compressed to its maximum and the elastic potential energy at this instant is $\frac{1}{2}(200)(s + 0.3)^2 = 100s^2 + 60s + 9$. Applying Eq. 14–21, we have

$$T_1 + V_1 = T_2 + V_2$$

$$\frac{1}{2}\left(\frac{60}{32.2}\right)\left(27.04^2\right) + 60s + 9.00 = 100s^2 + 60s + 9$$

$$s = 2.61 \text{ ft} \qquad \textbf{Ans.}$$

© 2010 Pearson Education, Inc., Upper Saddle River, NJ. All rights reserved. This material is protected under all copyright laws as they currently exist. No portion of this material may be reproduced, in any form or by any means, without permission in writing from the publisher.

R1–7. The man A has a weight of 100 lb and jumps from rest onto the platform P that has a weight of 60 lb. The platform is mounted on a spring, which has a stiffness $k = 200$ lb/ft. If the coefficient of restitution between the man and the platform is $e = 0.6$, and the man holds himself rigid during the motion, determine the required height h of the jump if the maximum compression of the spring is 2 ft.

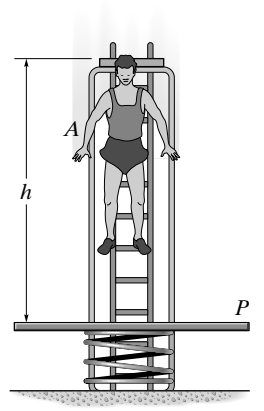

Conservation of Energy: The datum is set at the initial position of platform P. When the man falls from a height of h *above* the datum, his initial gravitational potential energy is $100h$. Applying Eq. 14–21, we have

$$T_1 + V_1 = T_2 + V_2$$

$$0 + 100h = \frac{1}{2}\left(\frac{100}{32.2}\right)(v_M)_1^2 + 0$$

$$(v_H)_1 = \sqrt{64.4h}$$

Conservation of Momentum:

$$m_M\,(v_M)_1 + m_P\,(v_P)_1 = m_M\,(v_M)_2 + m_P\,(v_P)_2$$

$$(+\downarrow) \qquad \left(\frac{100}{32.2}\right)(\sqrt{64.4h}) + 0 = \left(\frac{100}{32.2}\right)(v_M)_2 + \left(\frac{60}{32.2}\right)(v_P)_2 \qquad \textbf{[1]}$$

Coefficient of Restitution:

$$e = \frac{(v_p)_2 - (v_M)_2}{(v_M)_1 - (v_p)_1}$$

$$(+\downarrow) \qquad 0.6 = \frac{(v_p)_2 - (v_M)_2}{\sqrt{64.4h} - 0} \qquad \textbf{[2]}$$

Solving Eqs. [1] and [2] yields

$$(v_p)_2 = \sqrt{64.4h}\ \downarrow \qquad (v_M)_2 = 0.4\sqrt{64.4h}\ \downarrow$$

Conservation of Energy: The datum is set at the spring's compressed position. Initially, the spring has been compressed $\frac{60}{200} = 0.3$ ft and the elastic potential energy is $\frac{1}{2}(200)\left(0.3^2\right) = 9.00$ ft · lb. Here, the compression of the spring caused by impact is $(2 - 0.3)$ ft $= 1.7$ ft. When platform P is at a height of 1.7 ft *above* the datum, its initial gravitational potential energy is $60(1.7) = 102$ ft · lb. When platform P stops momentary, the spring has been compressed to its maximum and the elastic potential energy at this instant is $\frac{1}{2}(200)\left(2^2\right) = 400$ ft · lb. Applying Eq. 14–21, we have

$$T_1 + V_1 = T_2 + V_2$$

$$\frac{1}{2}\left(\frac{60}{32.2}\right)\left(\sqrt{64.4h}\right)^2 + 102 + 9.00 = 400$$

$$h = 4.82 \text{ ft} \qquad \textbf{Ans.}$$

© 2010 Pearson Education, Inc., Upper Saddle River, NJ. All rights reserved. This material is protected under all copyright laws as they currently exist. No portion of this material may be reproduced, in any form or by any means, without permission in writing from the publisher.

***R1–8.** The baggage truck A has a mass of 800 kg and is used to pull each of the 300-kg cars. Determine the tension in the couplings at B and C if the tractive force **F** on the truck is $F = 480$ N. What is the speed of the truck when $t = 2$ s, starting from rest? The car wheels are free to roll. Neglect the mass of the wheels.

$\overset{+}{\rightarrow} \Sigma F_x = ma_x;$ $\quad 480 = [800 + 2(300)]a$

$a = 0.3429 \text{ m/s}^2$

$(\overset{+}{\rightarrow})$ $\quad v = v_0 + a_c t$

$v = 0 + 0.3429(2) = 0.686 \text{ m/s}$ **Ans.**

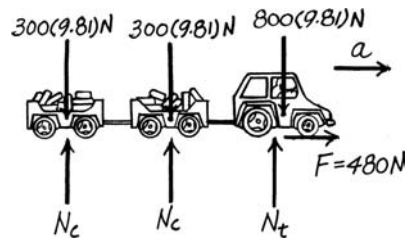

$\overset{+}{\rightarrow} \Sigma F_x = ma_x;$ $\quad T_B = 2(300)(0.3429)$

$T_B = 205.71 = 206 \text{ N}$ **Ans.**

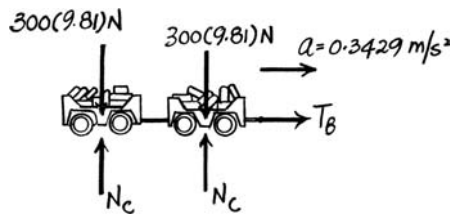

$\overset{+}{\rightarrow} \Sigma F_x = ma_x;$ $\quad T_C = (300)(0.3429)$

$T_C = 102.86 = 103 \text{ N}$ **Ans.**

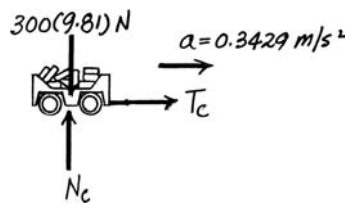

R1–9. The baggage truck A has a mass of 800 kg and is used to pull each of the 300-kg cars. If the tractive force **F** on the truck is $F = 480$ N, determine the acceleration of the truck. What is the acceleration of the truck if the coupling at C suddenly fails? The car wheels are free to roll. Neglect the mass of the wheels.

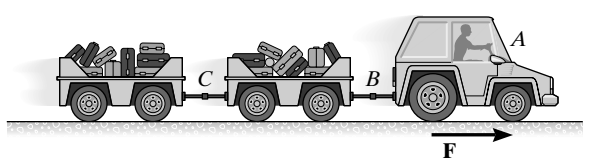

$\overset{+}{\rightarrow} \Sigma F_x = ma_x;$ $\quad 480 = [800 + 2(300)]a$

$a = 0.3429 = 0.343 \text{ m/s}^2$ **Ans.**

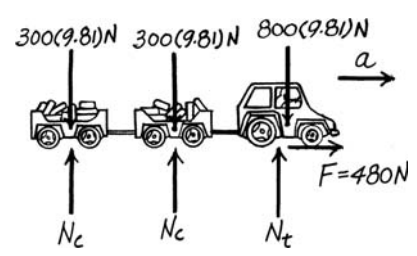

$\overset{+}{\rightarrow} \Sigma F_x = ma_x;$ $\quad 480 = (800 + 300)a$

$a = 0.436 \text{ m/s}^2$ **Ans.**

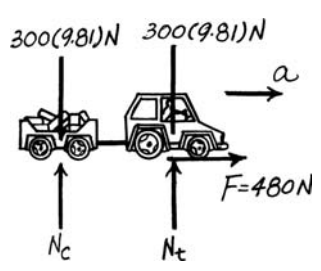

© 2010 Pearson Education, Inc., Upper Saddle River, NJ. All rights reserved. This material is protected under all copyright laws as they currently exist. No portion of this material may be reproduced, in any form or by any means, without permission in writing from the publisher.

R1–10. A car travels at 80 ft/s when the brakes are suddenly applied, causing a constant deceleration of 10 ft/s^2. Determine the time required to stop the car and the distance traveled before stopping.

$(\overset{+}{\rightarrow})$ $v = v_0 + a_c t$

$0 = 80 + (-10)t$

$t = 8$ s **Ans.**

$(\overset{+}{\rightarrow})$ $v^2 = v_0^2 + 2a_c(s - s_0)$

$0 = (80)^2 + 2(-10)(s - 0)$

$s = 320$ ft **Ans.**

R1–11. Determine the speed of block B if the end of the cable at C is pulled downward with a speed of 10 ft/s. What is the relative velocity of the block with respect to C?

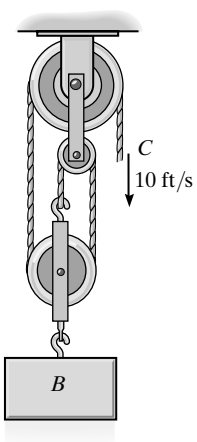

$3s_B + s_C = l$

$3v_B = -v_C$

$3v_B = -(10)$

$v_B = -3.33$ ft/s $= 3.33$ ft/s $\uparrow$ **Ans.**

$(+\downarrow)$ $v_B = v_C + v_{B/C}$

$-3.33 = 10 + v_{B/C}$

$v_{B/C} = -13.3$ ft/s $= 13.3$ ft/s $\uparrow$ **Ans.**

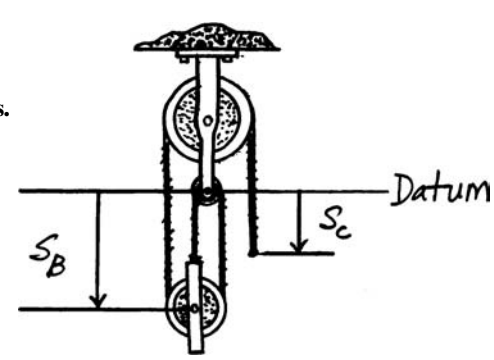

© 2010 Pearson Education, Inc., Upper Saddle River, NJ. All rights reserved. This material is protected under all copyright laws as they currently exist. No portion of this material may be reproduced, in any form or by any means, without permission in writing from the publisher.

***R1–12.** The skier starts fom rest at A and travels down the ramp. If friction and air resistance can be neglected, determine his speed v_B when he reaches B. Also, compute the distance s to where he strikes the ground at C, if he makes the jump traveling horizontally at B. Neglect the skier's size. He has a mass of 70 kg.

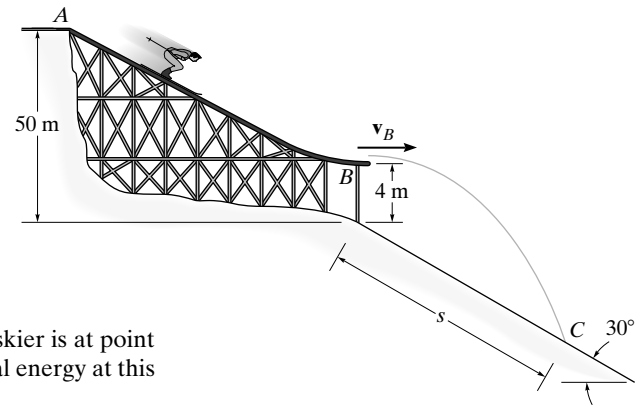

Potential Energy: The datum is set at the lowest point B. When the skier is at point A, he is $(50 - 4) = 46$ m *above* the datum. His gravitational potential energy at this position is $70(9.81)(46) = 31588.2$ J.

Conservation of Energy: Applying Eq. 14–21, we have

$$T_A + V_A = T_B + V_B$$

$$0 + 31588.2 = \frac{1}{2}(70)\,v_B^2$$

$$v_B = 30.04 \text{ m/s} = 30.0 \text{ m/s} \qquad \textbf{Ans.}$$

Kinematics: By considering the vertical motion of the skier, we have

$$(+\downarrow) \qquad s_y = (s_0)_y + (v_0)_y\,t + \frac{1}{2}(a_c)_y\,t^2$$

$$4 + s\sin 30° = 0 + 0 + \frac{1}{2}(9.81)\,t^2 \qquad \textbf{[1]}$$

By considering the horizontal motion of the skier, we have

$$(\overset{+}{\leftarrow}) \qquad s_x = (s_0)_x + v_x\,t$$

$$s\cos 30° = 0 + 30.04\,t \qquad \textbf{[2]}$$

Solving Eqs. [1] and [2] yields

$$s = 130 \text{ m} \qquad \textbf{Ans.}$$

$$t = 3.753 \text{ s}$$

© 2010 Pearson Education, Inc., Upper Saddle River, NJ. All rights reserved. This material is protected under all copyright laws as they currently exist. No portion of this material may be reproduced, in any form or by any means, without permission in writing from the publisher.

R1–13. The position of a particle is defined by $r = \{5(\cos 2t)\mathbf{i} + 4(\sin 2t)\mathbf{j}\}$ m, where t is in seconds and the arguments for the sine and cosine are given in radians. Determine the magnitudes of the velocity and acceleration of the particle when $t = 1$ s. Also, prove that the path of the particle is elliptical.

Velocity: The velocity expressed in Cartesian vector form can be obtained by applying Eq. 12–7.

$$\mathbf{v} = \frac{d\mathbf{r}}{dt} = \{-10 \sin 2r\mathbf{i} + 8 \cos 2r\mathbf{j}\} \text{ m/s}$$

When $t = 1$ s, $\mathbf{v} = -10 \sin 2(1)\mathbf{i} + 8 \cos 2(1)\,\mathbf{j} = (-9.093\mathbf{i} - 3.329\mathbf{j}\}$ m/s. Thus, the magnitude of the velocity is

$$v = \sqrt{v_x^2 + v_y^2} = \sqrt{(-9.093)^2 + (-3.329)^2} = 9.68 \text{ m/s} \qquad \textbf{Ans.}$$

Acceleration: The acceleration express in Cartesian vector form can be obtained by applying Eq. 12–9.

$$\mathbf{a} = \frac{d\mathbf{v}}{dt} = \{-20 \cos 2\mathbf{r}\mathbf{i} - 16 \sin 2r\mathbf{j}\} \text{ m/s}^2$$

When $t = 1$ s, $\mathbf{a} = -20 \cos 2(1)\,\mathbf{i} - 16 \sin 2(1)\,\mathbf{j} = \{8.323\mathbf{i} - 14.549\mathbf{j}\}$ m/s^2. Thus, the magnitude of the acceleration is

$$a = \sqrt{a_x^2 + a_y^2} = \sqrt{8.323^2 + (-14.549)^2} = 16.8 \text{ m/s}^2 \qquad \textbf{Ans.}$$

Travelling Path: Here, $x = 5 \cos 2t$ and $y = 4 \sin 2t$. Then,

$$\frac{x^2}{25} = \cos^2 2t \qquad \textbf{[1]}$$

$$\frac{y^2}{16} = \sin^2 2t \qquad \textbf{[2]}$$

Adding Eqs [1] and [2] yields

$$\frac{x^2}{25} + \frac{y^2}{16} = \cos^2 2r + \sin^2 2t$$

However, $\cos^2 2r + \sin^2 2t = 1$. Thus,

$$\frac{x^2}{25} + \frac{y^2}{16} = 1 \quad (\textbf{Equation of an Ellipse}) \qquad \textbf{(Q.E.D.)}$$

© 2010 Pearson Education, Inc., Upper Saddle River, NJ. All rights reserved. This material is protected under all copyright laws as they currently exist. No portion of this material may be reproduced, in any form or by any means, without permission in writing from the publisher.

R1–14. The 5-lb cylinder falls past A with a speed $v_A = 10$ ft/s onto the platform. Determine the maximum displacement of the platform, caused by the collision. The spring has an unstretched length of 1.75 ft and is originally kept in compression by the 1-ft-long cables attached to the platform. Neglect the mass of the platform and spring and any energy lost during the collision.

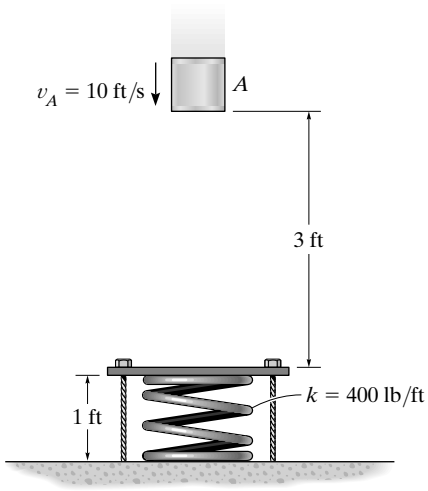

Potential Energy: Datum is set at the final position of the platform. When the cylinder is at point A, its position is $(3 + s)$ *above* the datum where s is the maximum displacement of the platform when the cylinder stops momentary. Thus, its gravitational potential energy at this position is $5(3 + s) = (15 + 5s)$ ft · lb. The initial and final elastic potential energy are $\frac{1}{2}(400)(1.75 - 1)^2 = 112.5$ ft · lb and $\frac{1}{2}(400)(s + 0.75)^2 = 200s^2 + 300s + 112.5$, respectively.

Conservation of Energy: Applying Eq. 14–22, we have

$$\Sigma T_A + \Sigma V_A = \Sigma T_B + \Sigma V_B$$

$$\frac{1}{2}\left(\frac{5}{32.2}\right)\left(10^2\right) + (15 + 5s) + 112.5 = 0 + 200s^2 + 300s + 112.5$$

$$s = 0.0735 \text{ ft} \qquad \textbf{Ans.}$$

R1–15. The block has a mass of 50 kg and rests on the surface of the cart having a mass of 75 kg. If the spring which is attached to the cart and not the block is compressed 0.2 m and the system is released from rest, determine the speed of the block after the spring becomes undeformed. Neglect the mass of the cart's wheels and the spring in the calculation. Also neglect friction. Take $k = 300$ N/m.

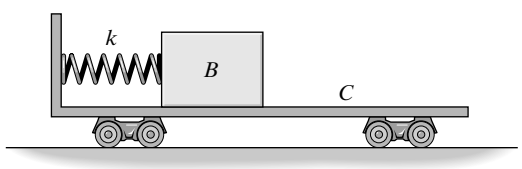

$$T_1 + V_1 = T_2 + V_2$$

$$[0 + 0] + \frac{1}{2}(300)(0.2)^2 = \frac{1}{2}(50)\,v_b^2 + \frac{1}{2}(75)\,v_e^2$$

$$12 = 50\,v_b^2 + 75\,v_e^2$$

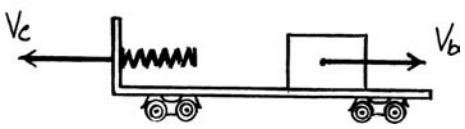

$$(\overset{+}{\rightarrow}) \qquad \Sigma m v_1 = \Sigma m v_2$$

$$0 + 0 = 50\,v_b - 75\,v_e$$

$$v_b = 1.5 v_e$$

$$v_c = 0.253 \text{ m/s} \leftarrow$$

$$v_b = 0.379 \text{ m/s} \rightarrow \qquad \textbf{Ans.}$$

© 2010 Pearson Education, Inc., Upper Saddle River, NJ. All rights reserved. This material is protected under all copyright laws as they currently exist. No portion of this material may be reproduced, in any form or by any means, without permission in writing from the publisher.

***R1–16.** The block has a mass of 50 kg and rests on the surface of the cart having a mass of 75 kg. If the spring which is attached to the cart and not the block is compressed 0.2 m and the system is released from rest, determine the speed of the block with respect to the cart after the spring becomes undeformed. Neglect the mass of the cart's wheels and the spring in the calculation. Also neglect friction. Take $k = 300$ N/m.

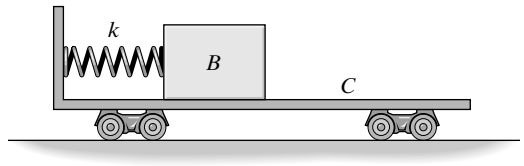

$T_1 + V_1 = T_2 + V_2$

$[0 + 0] + \frac{1}{2}(300)(0.2)^2 = \frac{1}{2}(50)v_b^2 + \frac{1}{2}(75)\,v_e^2$

$12 = 50\,v_b^2 + 75\,v_e^2$

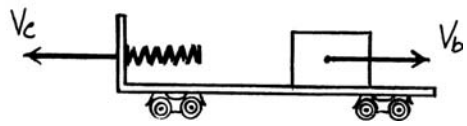

$(\overset{+}{\rightarrow})$ $\quad \Sigma m v_1 = \Sigma m v_2$

$0 + 0 = 50\,v_b - 75\,v_e$

$v_b = 1.5\,v_e$

$v_c = 0.253 \text{ m/s} \leftarrow$

$v_b = 0.379 \text{ m/s} \rightarrow$

$\mathbf{v}_b = \mathbf{v}_c + \mathbf{v}_{b/c}$

$(\overset{+}{\rightarrow})$ $\quad 0.379 = -0.253 + \mathbf{v}_{b/c}$

$v_{b/c} = 0.632 \text{ m/s} \rightarrow$ **Ans.**

© 2010 Pearson Education, Inc., Upper Saddle River, NJ. All rights reserved. This material is protected under all copyright laws as they currently exist. No portion of this material may be reproduced, in any form or by any means, without permission in writing from the publisher.

R1–17. A ball is launched from point A at an angle of 30°. Determine the maximum and minimum speed v_A it can have so that it lands in the container.

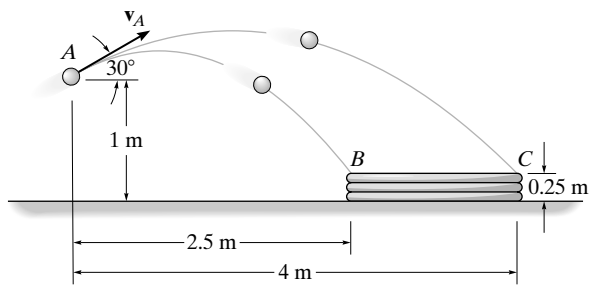

Min. speed:

$(\overset{+}{\rightarrow})$ $\quad s = s_0 + v_0 t$

$$2.5 = 0 + v_A \cos 30° t$$

$(+\uparrow)$ $\quad s = s_0 + v_0 t + \frac{1}{2} a_c t^2$

$$0.25 = 1 + v_A \sin 30° t - \frac{1}{2}(9.81)t^2$$

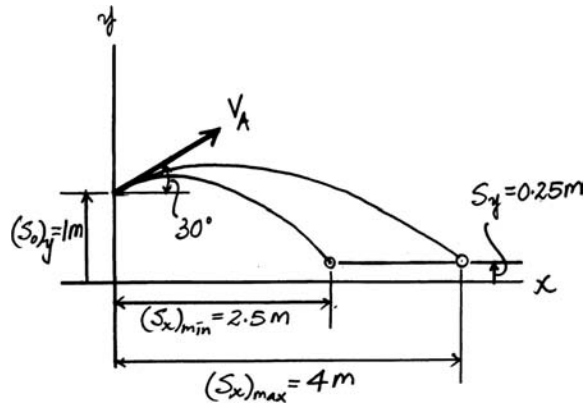

Solving

$t = 0.669$ s

$v_A = (v_A)_{\min} = 4.32$ m/s **Ans.**

Max. speed:

$(\overset{+}{\rightarrow})$ $\quad s = s_0 + v_0 t$

$$4 = 0 + v_A \cos 30° t$$

$(+\uparrow)$ $\quad s = s_0 + v_0 t + \frac{1}{2} a_c t^2$

$$0.25 = 1 + v_A \sin 30° t - \frac{1}{2}(9.81) t^2$$

Solving:

$t = 0.790$ s

$v_A = (v_A)_{\max} = 5.85$ m/s **Ans.**

© 2010 Pearson Education, Inc., Upper Saddle River, NJ. All rights reserved. This material is protected under all copyright laws as they currently exist. No portion of this material may be reproduced, in any form or by any means, without permission in writing from the publisher.

R1–18. At the instant shown, cars A and B travel at speeds of 55 mi/h and 40 mi/h, respectively. If B is increasing its speed by 1200 mi/h^2, while A maintains its constant speed, determine the velocity and acceleration of B with respect to A. Car B moves along a curve having a radius of curvature of 0.5 mi.

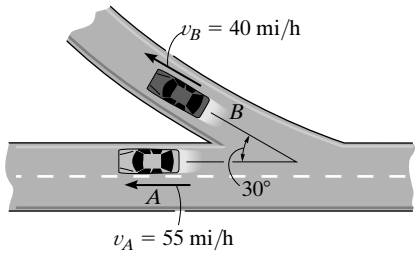

$\mathbf{v}_B = -40\cos 30°\mathbf{i} + 40\sin 30°\mathbf{j} = \{-34.64\mathbf{i} + 20\mathbf{j}\}$ mi/h

$\mathbf{v}_A = \{-55\mathbf{i}\}$ mi/h

$\mathbf{v}_{B/A} = \mathbf{v}_B - \mathbf{v}_A$

$= (-34.64\mathbf{i} + 20\mathbf{j}) - (-55\mathbf{i}) = \{20.36\mathbf{i} + 20\mathbf{j}\}$ mi/h

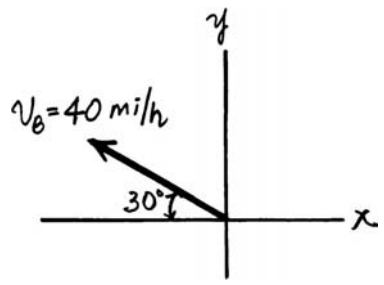

$v_{B/A} = \sqrt{20.36^2 + 20^2} = 28.5$ mi/h **Ans.**

$\theta = \tan^{-1}\left(\dfrac{20}{20.36}\right) = 44.5°\ \measuredangle$ **Ans.**

$(a_B)_n = \dfrac{v_B^2}{\rho} = \dfrac{40^2}{0.5} = 3200$ mi/h^2 $\qquad (a_B)_t = 1200$ mi/h^2

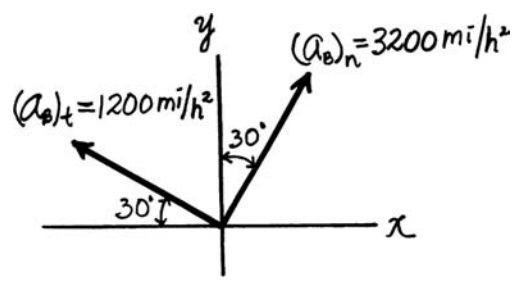

$\mathbf{a}_B = (3200\sin 30° - 1200\cos 30°)\mathbf{i} + (3200\cos 30° + 1200\sin 30°)\mathbf{j}$

$= \{560.77\mathbf{i} + 3371.28\mathbf{j}\}$ mi/h^2

$\mathbf{a}_A = \mathbf{0}$

$\mathbf{a}_B = \mathbf{a}_A + \mathbf{a}_{B/A}$

$560.77\mathbf{i} + 3371.28\mathbf{j} = \mathbf{0} + \mathbf{a}_{B/A}$

$\mathbf{a}_{B/A} = \{560.77\mathbf{i} + 3371.28\mathbf{j}\}$ mi/h^2

$a_{B/A} = \sqrt{(560.77)^2 + (3371.28)^2} = 3418$ mi/h$^2 = 3.42\left(10^3\right)$ mi/h^2 **Ans.**

$\theta = \tan^{-1}\left(\dfrac{3371.28}{560.77}\right) = 80.6°\ \measuredangle$ **Ans.**

© 2010 Pearson Education, Inc., Upper Saddle River, NJ. All rights reserved. This material is protected under all copyright laws as they currently exist. No portion of this material may be reproduced, in any form or by any means, without permission in writing from the publisher.

R1–19. At the instant shown, cars A and B travel at speeds of 55 mi/h and 40 mi/h, respectively. If B is decreasing its speed at 1500 mi/h^2 while A is increasing its speed at 800 mi/h^2, determine the acceleration of B with respect to A. Car B moves along a curve having a radius of curvature of 0.75 mi.

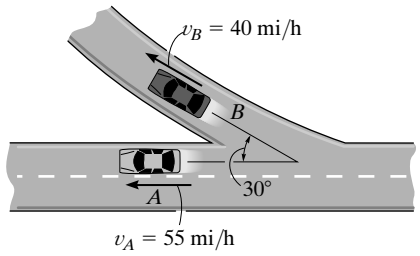

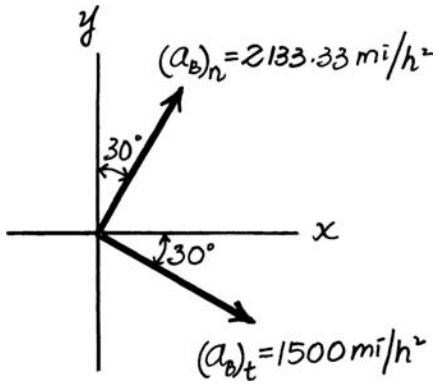

$$(a_B)_n = \frac{v_B^2}{\rho} = \frac{(40)^2}{0.75} = 2133.33 \text{ mi/h}^2$$

$$\mathbf{a}_B = \mathbf{a}_A + \mathbf{a}_{B/A}$$

$$2133.33 \sin 30°\mathbf{i} + 2133.33 \cos 30°\mathbf{j} + 1500 \cos 30°\mathbf{i} - 1500 \sin 30°\mathbf{j}$$

$$= -800\mathbf{i} + (a_{B/A})_x\,\mathbf{i} + (a_{B/A})_y\,\mathbf{j}$$

$(\overset{+}{\rightarrow})$ $\quad 2133.33 \sin 30° + 1500 \cos 30° = -800 + (a_{B/A})_x$

$$(a_{B/A})_x = 3165.705 \rightarrow$$

$(+\uparrow)$ $\quad 2133.33 \cos 30° - 1500 \sin 30° = (a_{B/A})_y$

$$(a_{B/A})_y = 1097.521 \uparrow$$

$$(a_{B/A}) = \sqrt{(1097.521)^2 + (3165.705)^2}$$

$$a_{B/A} = 3351 \text{ mi/h}^2 = 3.35\left(10^3\right) \text{ mi/h}^2 \qquad \textbf{Ans.}$$

$$\theta = \tan^{-1}\left(\frac{1097.521}{3165.705}\right) = 19.1° \measuredangle \qquad \textbf{Ans.}$$

© 2010 Pearson Education, Inc., Upper Saddle River, NJ. All rights reserved. This material is protected under all copyright laws as they currently exist. No portion of this material may be reproduced, in any form or by any means, without permission in writing from the publisher.

***R1–20.** Four inelastic cables C are attached to a plate P and hold the 1-ft-long spring 0.25 ft in compression when *no weight* is on the plate. There is also an undeformed spring nested within this compressed spring. If the block, having a weight of 10 lb, is moving downward at $v = 4$ ft/s, when it is 2 ft above the plate, determine the maximum compression in each spring after it strikes the plate. Neglect the mass of the plate and springs and any energy lost in the collision.

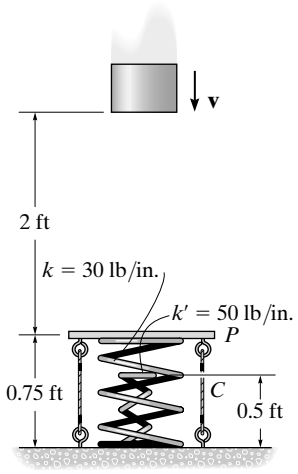

$k = 30(12) = 360$ lb/ft

$k' = 50(12) = 600$ lb/ft

Assume both springs compress;

$T_1 + V_1 = T_2 + V_2$

$$\frac{1}{2}\left(\frac{10}{32.2}\right)(4)^2 + 0 + \frac{1}{2}(360)(0.25)^2 = 0 + \frac{1}{2}(360)(s + 0.25)^2 + \frac{1}{2}(600)(s - 0.25)^2 - 10(s + 2)$$

$$13.73 = 180(s + 0.25)^2 + 300(s - 0.25)^2 - 10s - 20 \qquad \textbf{(1)}$$

$$33.73 = 180(s + 0.25)^2 + 300(s - 0.25)^2 - 10s$$

$$480s^2 - 70s - 3.73 = 0$$

Choose the positive root;

$s = 0.1874 \text{ ft} < 0.25 \text{ ft}$ **NG!**

The nested spring does not deform.

Thus Eq. (1) becomes

$$13.73 = 180(s + 0.25)^2 - 10s - 20$$

$$180\,s^2 + 80\,s - 22.48 = 0$$

$s = 0.195$ ft **Ans.**

© 2010 Pearson Education, Inc., Upper Saddle River, NJ. All rights reserved. This material is protected under all copyright laws as they currently exist. No portion of this material may be reproduced, in any form or by any means, without permission in writing from the publisher.

R1–21. Four inelastic cables C are attached to plate P and hold the 1-ft-long spring 0.25 ft in compression when *no weight* is on the plate. There is also a 0.5-ft-long undeformed spring nested within this compressed spring. Determine the speed v of the 10-lb block when it is 2 ft above the plate, so that after it strikes the plate, it compresses the nested spring, having a stiffness of 50 lb/in., an amount of 0.20 ft. Neglect the mass of the plate and springs and any energy lost in the collision.

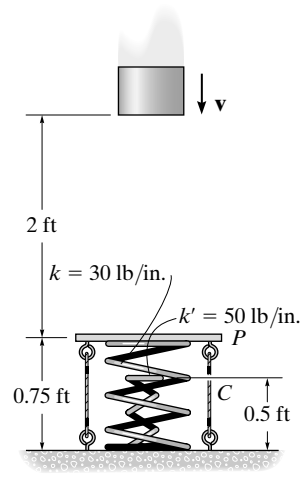

$k = 30(12) = 360 \text{ lb/ft}$

$k' = 50(12) = 600 \text{ lb/ft}$

$T_1 + V_1 = T_2 + V_2$

$$\frac{1}{2}\left(\frac{10}{32.2}\right)v^2 + \frac{1}{2}(360)(0.25)^2 = \frac{1}{2}(360)(0.25 + 0.25 + 0.20)^2 + \frac{1}{2}(600)(0.20)^2 - 10(2 + 0.25 + 0.20)$$

$v = 20.4 \text{ ft/s}$ **Ans.**

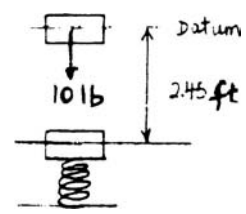

R1–22. The 2-kg spool S fits loosely on the rotating inclined rod for which the coefficient of static friction is $\mu_s = 0.2$. If the spool is located 0.25 m from A, determine the minimum constant speed the spool can have so that it does not slip down the rod.

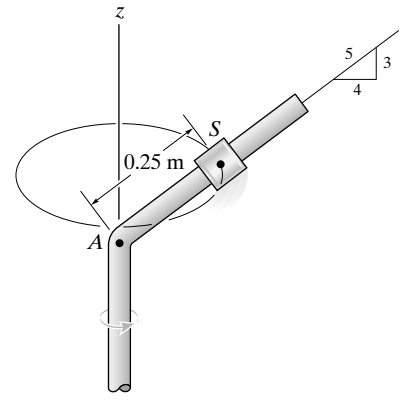

$$\rho = 0.25\left(\frac{4}{5}\right) = 0.2 \text{ m}$$

$\overset{+}{\leftarrow} \Sigma F_n = ma_n;$ $\quad N_s\left(\frac{3}{5}\right) - 0.2N_s\left(\frac{4}{5}\right) = 2\left(\frac{v^2}{0.2}\right)$

$+\uparrow \Sigma F_b = m\,a_b;$ $\quad N_s\left(\frac{4}{5}\right) + 0.2N_s\left(\frac{3}{5}\right) - 2(9.81) = 0$

$N_s = 21.3 \text{ N}$

$v = 0.969 \text{ m/s}$ **Ans.**

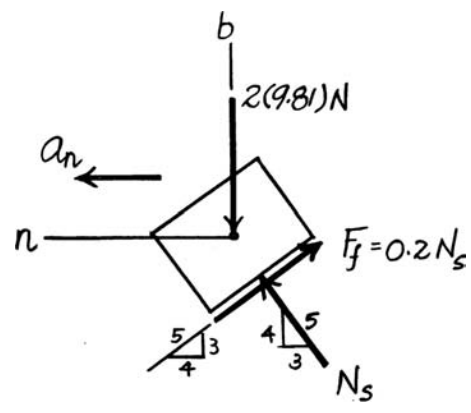

© 2010 Pearson Education, Inc., Upper Saddle River, NJ. All rights reserved. This material is protected under all copyright laws as they currently exist. No portion of this material may be reproduced, in any form or by any means, without permission in writing from the publisher.

R1–23. The 2-kg spool S fits loosely on the rotating inclined rod for which the coefficient of static friction is $\mu_s = 0.2$. If the spool is located 0.25 m from A, determine the maximum constant speed the spool can have so that it does not slip up the rod.

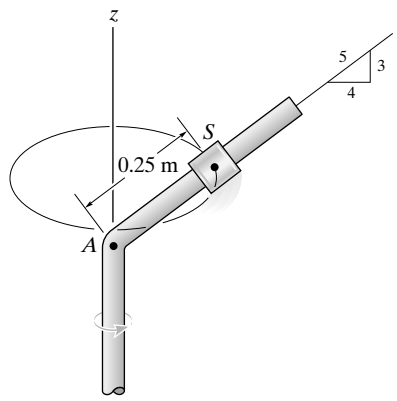

$$\rho = 0.25\left(\frac{4}{5}\right) = 0.2 \text{ m}$$

$$\overset{+}{\leftarrow} \Sigma F_n = ma_n; \qquad N_s\left(\frac{3}{5}\right) + 0.2N_s\left(\frac{4}{5}\right) = 2\left(\frac{v^2}{0.2}\right)$$

$$+\uparrow \Sigma F_b = m\,a_b; \qquad N_s\left(\frac{4}{5}\right) - 0.2N_s\left(\frac{3}{5}\right) - 2(9.81) = 0$$

$$N_s = 28.85 \text{ N}$$

$$v = 1.48 \text{ m/s} \qquad \textbf{Ans.}$$

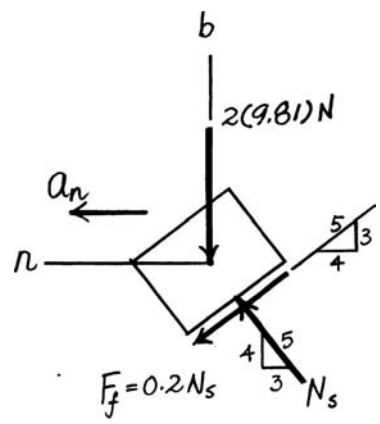

***R1–24.** The winding drum D draws in the cable at an accelerated rate of 5 m/s^2. Determine the cable tension if the suspended crate has a mass of 800 kg.

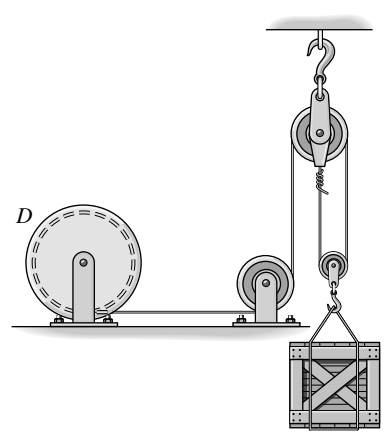

$$s_A + 2\,s_B = l$$

$$a_A = -2\,a_B$$

$$5 = -2\,a_B$$

$$a_B = -2.5 \text{ m/s}^2 = 2.5 \text{ m/s}^2 \uparrow$$

$$+\uparrow \Sigma F_y = ma_y; \qquad 2T - 800(9.81) = 800(2.5)$$

$$T = 4924 \text{ N} = 4.92 \text{ kN} \qquad \textbf{Ans.}$$

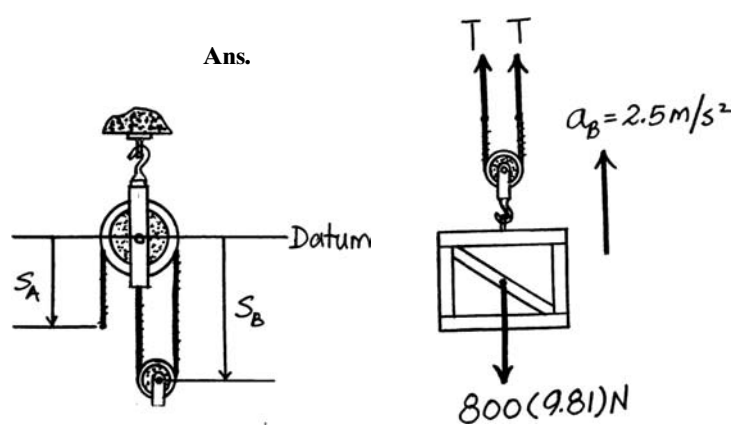

© 2010 Pearson Education, Inc., Upper Saddle River, NJ. All rights reserved. This material is protected under all copyright laws as they currently exist. No portion of this material may be reproduced, in any form or by any means, without permission in writing from the publisher.

R1–25. The bottle rests at a distance of 3 ft from the center of the horizontal platform. If the coefficient of static friction between the bottle and the platform is $\mu_s = 0.3$, determine the maximum speed that the bottle can attain before slipping. Assume the angular motion of the platform is slowly increasing.

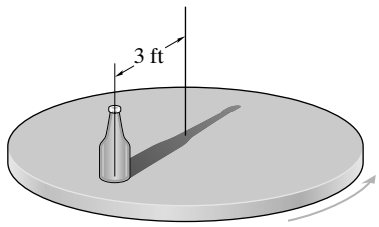

$\Sigma F_b = 0;$ $\quad N - W = 0 \quad N = W$

Since the bottle is on the verge of slipping, then $F_f = \mu_s N = 0.3W$.

$\Sigma F_n = ma_n;$ $\quad 0.3W = \left(\frac{W}{32.2}\right)\left(\frac{v^2}{3}\right)$

$v = 5.38 \text{ ft/s}$ **Ans.**

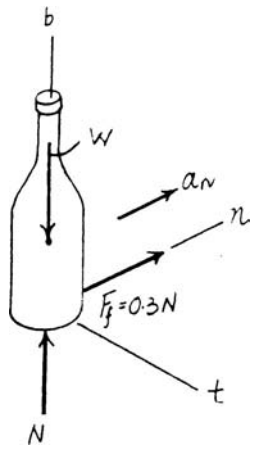

R1–26. Work Prob. R1–25 assuming that the platform starts rotating from rest so that the speed of the bottle is increased at 2 ft/s^2.

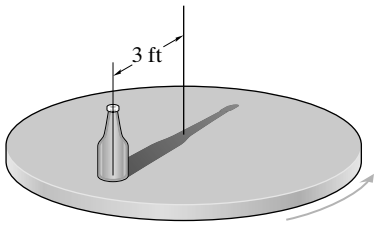

Applying Eq. 13–8, we have

$\Sigma F_b = 0;$ $\quad N - W = 0 \quad N = W$

Since the bottle is on the verge of slipping, then $F_f = \mu_s N = 0.3W$.

$\Sigma F_t = ma_t;$ $\quad 0.3W \sin\theta = \left(\frac{W}{32.2}\right)(2)$ **[1]**

$\Sigma F_n = ma_n;$ $\quad 0.3W \cos\theta = \left(\frac{W}{32.2}\right)\left(\frac{v^2}{3}\right)$ **[2]**

Solving Eqs. [1] and [2] yields

$v = 5.32 \text{ ft/s}$ **Ans.**

$\theta = 11.95°$

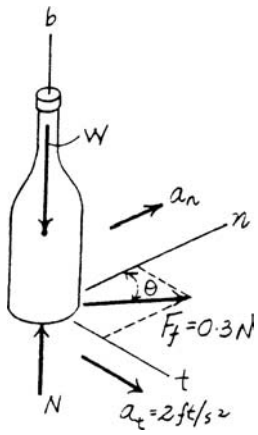

© 2010 Pearson Education, Inc., Upper Saddle River, NJ. All rights reserved. This material is protected under all copyright laws as they currently exist. No portion of this material may be reproduced, in any form or by any means, without permission in writing from the publisher.

R1–27. The 150-lb man lies against the cushion for which the coefficient of static friction is $\mu_s = 0.5$. Determine the resultant normal and frictional forces the cushion exerts on him if, due to rotation about the z axis, he has a constant speed $v = 20$ ft/s. Neglect the size of the man. Take $\theta = 60°$.

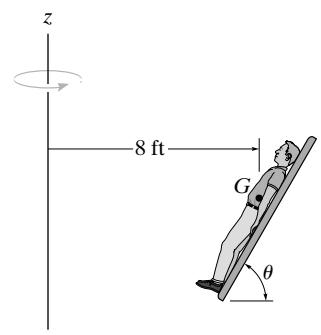

$$+\nwarrow \Sigma F_y = m(a_n)_y; \qquad N - 150\cos 60° = \frac{150}{32.2}\left(\frac{20^2}{8}\right)\sin 60°$$

$$N = 277 \text{ lb} \qquad \textbf{Ans.}$$

$$+\swarrow \Sigma F_x = m(a_n)_x; \qquad -F + 150\sin 60° = \frac{150}{32.2}\left(\frac{20^2}{8}\right)\cos 60°$$

$$F = 13.4 \text{ lb} \qquad \textbf{Ans.}$$

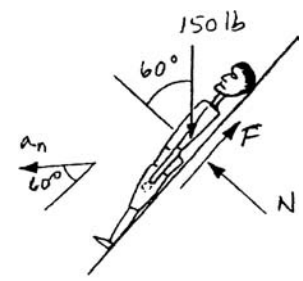

Note: No slipping occurs

Since $\mu_s N = 138.4 \text{ lb} > 13.4 \text{ lb}$

***R1–28.** The 150-lb man lies against the cushion for which the coefficient of static friction is $\mu_s = 0.5$. If he rotates about the z axis with a constant speed $v = 30$ ft/s, determine the smallest angle θ of the cushion at which he will begin to slip up the cushion.

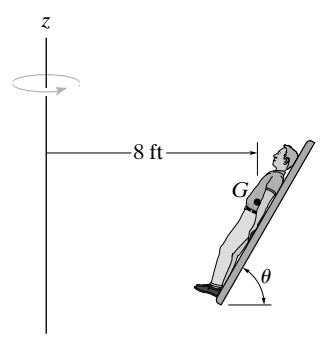

$$\overset{+}{\leftarrow} \Sigma F_n = ma_n; \qquad 0.5N\cos\theta + N\sin\theta = \frac{150}{32.2}\left(\frac{(30)^2}{8}\right)$$

$$+\uparrow \Sigma F_b = 0; \qquad -150 + N\cos\theta - 0.5\,N\sin\theta = 0$$

$$N = \frac{150}{\cos\theta - 0.5\sin\theta}$$

$$\frac{(0.5\cos\theta + \sin\theta)150}{(\cos\theta - 0.5\sin\theta)} = \frac{150}{32.2}\left(\frac{(30)^2}{8}\right)$$

$$0.5\cos\theta + \sin\theta = 3.493\,79\cos\theta - 1.746\,89\sin\theta$$

$$\theta = 47.5° \qquad \textbf{Ans.}$$

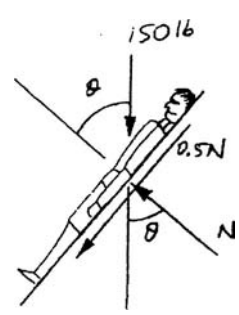

© 2010 Pearson Education, Inc., Upper Saddle River, NJ. All rights reserved. This material is protected under all copyright laws as they currently exist. No portion of this material may be reproduced, in any form or by any means, without permission in writing from the publisher.

R1–29. The motor pulls on the cable at A with a force $F = (30 + t^2)$ lb, where t is in seconds. If the 34-lb crate is originally at rest on the ground when $t = 0$, determine its speed when $t = 4$ s. Neglect the mass of the cable and pulleys. *Hint:* First find the time needed to begin lifting the crate.

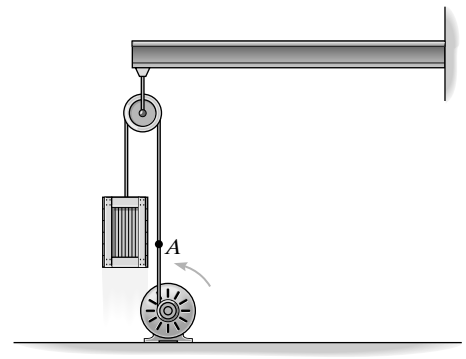

$$30 + t^2 = 34$$

$t = 2$ s for crate to start moving

$(+\uparrow)$ $\quad mv_1 + \Sigma \int F dt = mv_2$

$$0 + \int_2^4 (30 + t^2)dt - 34(4 - 2) = \frac{34}{32.2} v_2$$

$$[30t + \frac{1}{3}t^3]_2^4 - 68 = \frac{34}{32.2} v_2$$

$v_2 = 10.1$ ft/s **Ans.**

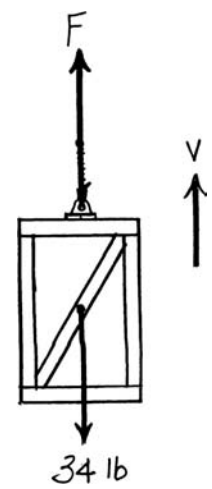

R1–30. The motor pulls on the cable at A with a force $F = (e^{2t})$ lb, where t is in seconds. If the 34-lb crate is originally at rest on the ground when $t = 0$, determine the crate's velocity when $t = 2$ s. Neglect the mass of the cable and pulleys. *Hint:* First find the time needed to begin lifting the crate.

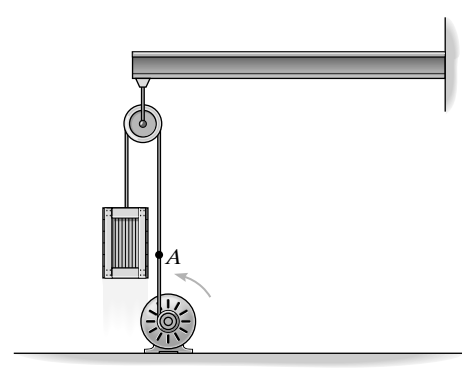

$$F = e^{2t} = 34$$

$t = 1.7632$ s for crate to start moving

$(+\uparrow)$ $\quad mv_1 + \Sigma \int F\, dt = mv_2$

$$0 + \int_{1.7632}^{2} e^{2t}\, dt - 34(2 - 1.7632) = \frac{34}{32.2} v_2$$

$$\frac{1}{2}e^{2t}\Big|_{1.7632}^{2} - 8.0519 = 1.0559\, v_2$$

$v_2 = 2.13$ ft/s **Ans.**

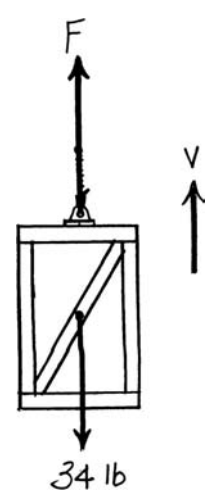

© 2010 Pearson Education, Inc., Upper Saddle River, NJ. All rights reserved. This material is protected under all copyright laws as they currently exist. No portion of this material may be reproduced, in any form or by any means, without permission in writing from the publisher.

R1–31. The collar has a mass of 2 kg and travels along the smooth *horizontal* rod defined by the equiangular spiral $r = (e^{\theta})$ m, where θ is in radians. Determine the tangential force **F** and the normal force **N** acting on the collar when $\theta = 45°$, if force **F** maintains a constant angular motion $\dot{\theta} = 2$ rad/s.

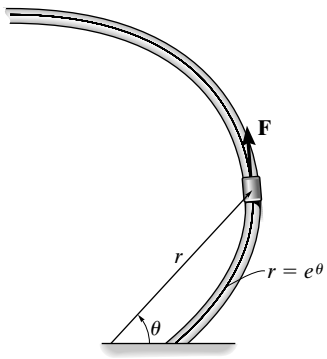

$$r = e^{\theta}$$

$$\dot{r} = e^{\theta}\dot{\theta}$$

$$\ddot{r} = e^{\theta}(\dot{\theta})^2 + e^{\theta}\ddot{\theta}$$

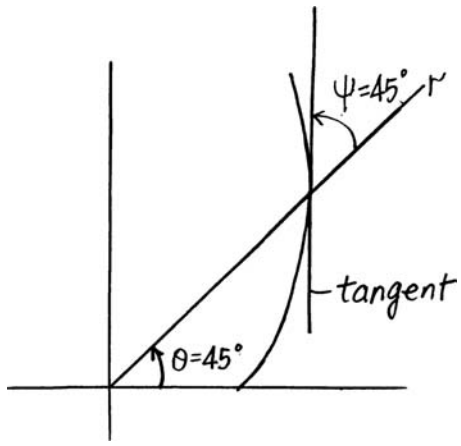

At $\theta = 45°$

$$\dot{\theta} = 2 \text{ rad/s}$$

$$\theta = 0$$

$$r = 2.1933 \text{ m}$$

$$\dot{r} = 4.38656 \text{ m/s}$$

$$\ddot{r} = 8.7731 \text{ m/s}^2$$

$$a_r = \ddot{r} - r\,(\dot{\theta})^2 = 8.7731 - 2.1933(2)^2 = 0$$

$$a_\theta = r\ddot{\theta} + 2\dot{r}\dot{\theta} = 0 + 2(4.38656)(2) = 17.5462 \text{ m/s}^2$$

$$\tan\psi = \frac{r}{\left(\frac{dr}{d\theta}\right)} = e^{\theta}/e^{\theta} = 1$$

$$\psi = \theta = 45°$$

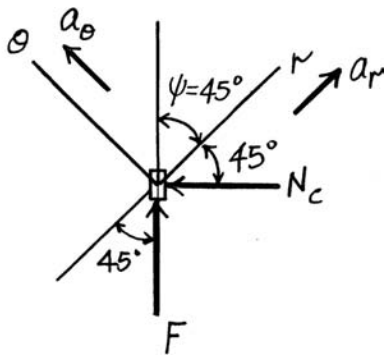

$$\Sigma F_r = m\,a_r; \qquad -N_r\cos 45° + F\cos 45° = 2(0)$$

$$\Sigma F_\theta = m\,a_\theta; \qquad F\sin 45° + N_\theta\sin 45° = 2(17.5462)$$

$N = 24.8$ N **Ans.**

$F = 24.8$ N **Ans.**

© 2010 Pearson Education, Inc., Upper Saddle River, NJ. All rights reserved. This material is protected under all copyright laws as they currently exist. No portion of this material may be reproduced, in any form or by any means, without permission in writing from the publisher.

***R1–32.** The collar has a mass of 2 kg and travels along the smooth *horizontal* rod defined by the equiangular spiral $r = (e^{\theta})$ m, where θ is in radians. Determine the tangential force **F** and the normal force **N** acting on the collar when $\theta = 90°$, if force **F** maintains a constant angular motion $\dot{\theta} = 2$ rad/s.

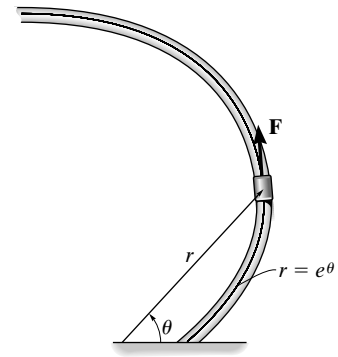

$$r = e^{\theta}$$

$$\dot{r} = e^{\theta}\,\dot{\theta}$$

$$\ddot{r} = e^{\theta}\,(\dot{\theta})^2 + e^{\theta}\,\ddot{\theta}$$

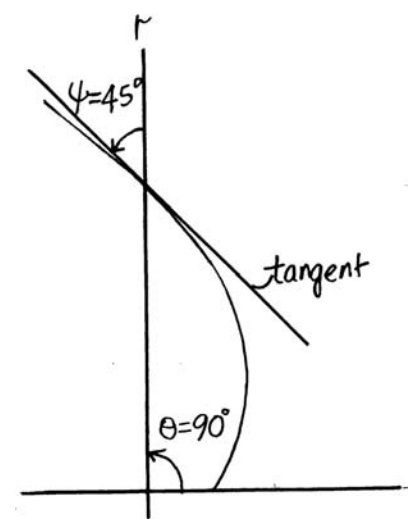

At $\theta = 90°$

$$\dot{\theta} = 2 \text{ rad/s}$$

$$\dot{\theta} = 0$$

$$r = 4.8105 \text{ m}$$

$$\dot{r} = 9.6210 \text{ m/s}$$

$$\ddot{r} = 19.242 \text{ m/s}^2$$

$$a_r = \ddot{r} - r(\dot{\theta})^2 = 19.242 - 4.8105(2)^2 = 0$$

$$a_\theta = r\,\ddot{\theta} + 2\,\dot{r}\,\dot{\theta} = 0 + 2(9.6210)(2) = 38.4838 \text{ m/s}^2$$

$$\tan\psi = \frac{r}{\left(\frac{dr}{d\theta}\right)} = e^{\theta}/e^{\theta} = 1$$

$$\psi = \theta = 45°$$

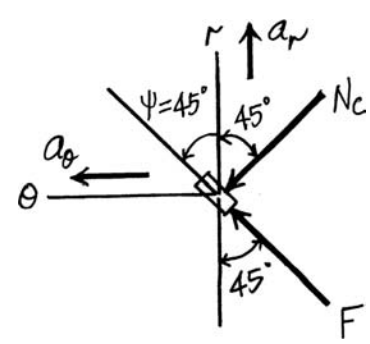

$+\uparrow \Sigma F_t = m\,a_t;\qquad -N\cos 45° + F\cos 45° = 2(0)$

$\overset{+}{\leftarrow} \Sigma F_\theta = m\,a_\theta;\qquad F\sin 45° + N\sin 45° = 2(38.4838)$

$N_t = 54.4$ N **Ans.**

$F = 54.4$ N **Ans.**

© 2010 Pearson Education, Inc., Upper Saddle River, NJ. All rights reserved. This material is protected under all copyright laws as they currently exist. No portion of this material may be reproduced, in any form or by any means, without permission in writing from the publisher.

R1–33. The acceleration of a particle along a straight line is defined by $a = (2t - 9)\ \text{m/s}^2$, where t is in seconds. When $t = 0$, $s = 1$ m and $v = 10$ m/s. When $t = 9$ s, determine (a) the particle's position, (b) the total distance traveled, and (c) the velocity. Assume the positive direction is to the right.

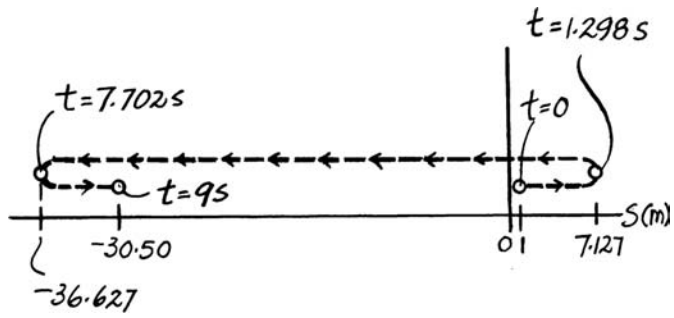

$$a = (2t - 9)$$

$$dv = a\,dt$$

$$\int_{10}^{v} dv = \int_{0}^{t} (2t - 9)\,dt$$

$$v - 10 = t^2 - 9t$$

$$v = t^2 - 9t + 10$$

$$ds = v\,dt$$

$$\int_{1}^{s} ds = \int_{0}^{t} \left(t^2 - 9t + 10\right) dt$$

$$s - 1 = \frac{1}{3}t^3 - 4.5t^2 + 10t$$

$$s = \frac{1}{3}t^3 - 4.5t^2 + 10t + 1$$

Note $v = 0$ at $t^2 - 9t + 10 = 0$

$$t = 1.298 \text{ s and } t = 7.702 \text{ s}$$

At $t = 1.298$ s, $s = 7.127$ m

At $t = 7.702$ s, $s = -36.627$ m

At $t = 9$ s, $s = -30.50$ m

a) $s = -30.5$ m **Ans.**

b) $s_{\text{tot}} = (7.127 - 1) + 7.127 + 36.627 + (36.627 - 30.50) = 56.0$ m **Ans.**

c) $v|_{t=9} = (9)^2 - 9(9) + 10 = 10$ m/s **Ans.**

© 2010 Pearson Education, Inc., Upper Saddle River, NJ. All rights reserved. This material is protected under all copyright laws as they currently exist. No portion of this material may be reproduced, in any form or by any means, without permission in writing from the publisher.

R1–34. The 400-kg mine car is hoisted up the incline using the cable and motor M. For a short time, the force in the cable is $F = (3200t^2)$ N, where t is in seconds. If the car has an initial velocity $v_1 = 2$ m/s when $t = 0$, determine its velocity when $t = 2$ s.

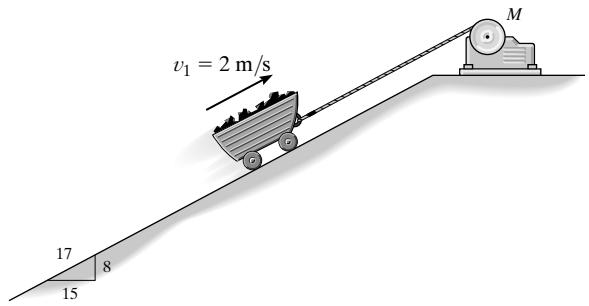

$$+\nearrow \Sigma F_{x'} = ma_{x'}; \qquad 3200t^2 - 400(9.81)\left(\frac{8}{17}\right) = 400a \qquad a = 8t^2 - 4.616$$

$$dv = adt$$

$$\int_2^v dv = \int_0^2 \left(8t^2 - 4.616\right)dt$$

$$v = 14.1 \text{ m/s}$$ **Ans.**

Also,

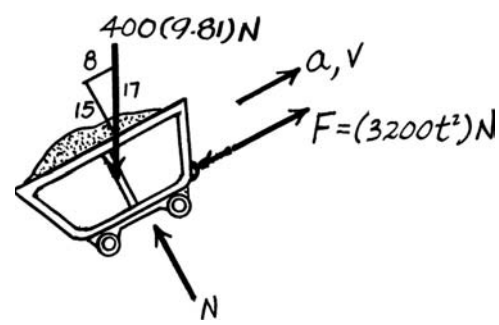

$$m\mathbf{v}_1 + \Sigma \int \mathbf{F}\, dt = m\mathbf{v}_2$$

$$+\nearrow \qquad 400(2) + \int_0^2 3200\, t^2\, dt - 400(9.81)(2 - 0)\left(\frac{8}{17}\right) = 400v_2$$

$$800 + 8533.33 - 3693.18 = 400v_2$$

$$v_2 = 14.1 \text{ m/s}$$

R1–35. The 400-kg mine car is hoisted up the incline using the cable and motor M. For a short time, the force in the cable is $F = (3200t^2)$ N, where t is in seconds. If the car has an initial velocity $v_1 = 2$ m/s at $s = 0$ and $t = 0$, determine the distance it moves up the plane when $t = 2$ s.

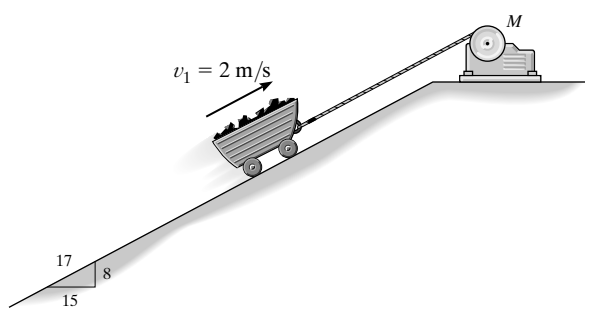

$$\Sigma F_{x'} = ma_{x'}; \qquad 3200t^2 - 400(9.81)\left(\frac{8}{17}\right) = 400a \qquad a = 8t^2 - 4.616$$

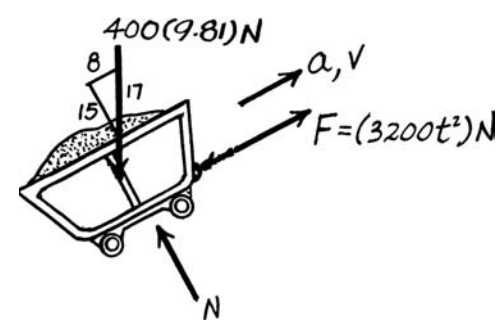

$$dv = adt$$

$$\int_2^v dv = \int_0^t \left(8t^2 - 4.616\right)dt$$

$$v = \frac{ds}{dt} = 2.667t^3 - 4.616t + 2$$

$$\int_2^s ds = \int_0^2 \left(2.667t^3 - 4.616t + 2\right)dt$$

$$s = 5.43 \text{ m}$$ **Ans.**

© 2010 Pearson Education, Inc., Upper Saddle River, NJ. All rights reserved. This material is protected under all copyright laws as they currently exist. No portion of this material may be reproduced, in any form or by any means, without permission in writing from the publisher.

***R1–36.** The rocket sled has a mass of 4 Mg and travels along the smooth horizontal track such that it maintains a constant power output of 450 kW. Neglect the loss of fuel mass and air resistance, and determine how far the sled must travel to reach a speed of $v = 60$ m/s starting from rest.

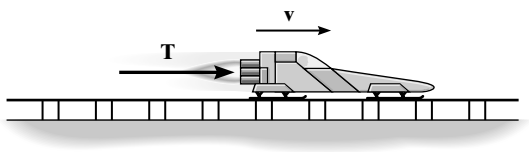

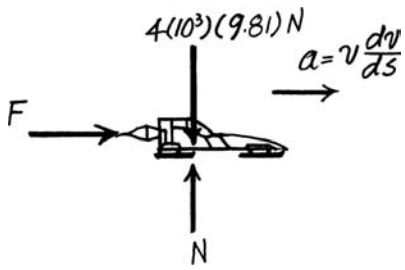

$$\xrightarrow{+} \Sigma F_x = m\,a_x\,; \qquad F = m\,a = m\left(\frac{v\,dv}{ds}\right)$$

$$P = F\,v = m\left(\frac{v^2\,dv}{ds}\right)$$

$$\int P\,ds = m\int v^2\,dv$$

$$P\int_0^s ds = m\int_0^v v^2\,dv$$

$$Ps = \frac{m\,v^3}{3}$$

$$s = \frac{m\,v^3}{3\,P}$$

$$s = \frac{4(10^3)(60)^3}{3(450)(10^3)} = 640\text{ m}$$ **Ans.**

R1–37. The collar has a mass of 20 kg and can slide freely on the smooth rod. The attached springs are undeformed when $d = 0.5$ m. Determine the speed of the collar after the applied force $F = 100$ N causes it to be displaced so that $d = 0.3$ m. When $d = 0.5$ m the collar is at rest.

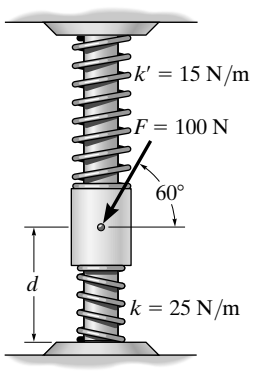

$$T_1 + \Sigma U_{1-2} = T_2$$

$$0 + 100\sin 60°(0.5 - 0.3) + 20(9.81)(0.5 - 0.3) - \frac{1}{2}(15)(0.5 - 0.3)^2 - \frac{1}{2}(25)(0.5 - 0.3)^2 = \frac{1}{2}(20)v_C^2$$

$$v_C = 2.36\text{ m/s}$$ **Ans.**

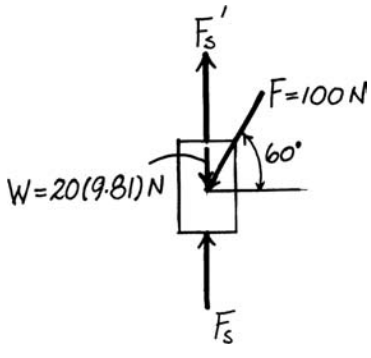

© 2010 Pearson Education, Inc., Upper Saddle River, NJ. All rights reserved. This material is protected under all copyright laws as they currently exist. No portion of this material may be reproduced, in any form or by any means, without permission in writing from the publisher.

R1–38. The collar has a mass of 20 kg and can slide freely on the smooth rod. The attached springs are both compressed 0.4 m when $d = 0.5$ m. Determine the speed of the collar after the applied force $F = 100$ N causes it to be displaced so that $d = 0.3$ m. When $d = 0.5$ m the collar is at rest.

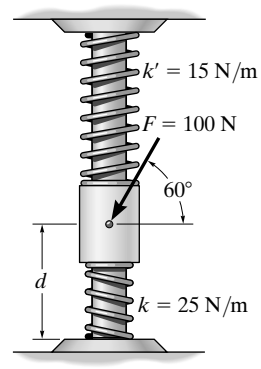

$T_1 + \Sigma U_{1-2} = T_2$

$$0 + 100 \sin 60°(0.5 - 0.3) + 196.2(0.5 - 0.3) - [\frac{1}{2}(25)[0.4 + 0.2]^2 - \frac{1}{2}(25)(0.4)^2]$$

$$- [\frac{1}{2}(15)[0.4 - 0.2]^2 - \frac{1}{2}(15)(0.4)^2] = \frac{1}{2}(20)v_C^2$$

$v_C = 2.34$ m/s **Ans.**

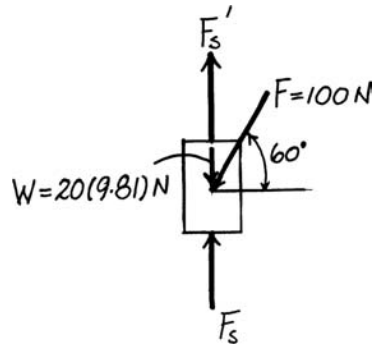

R1–39. The assembly consists of two blocks A and B which have masses of 20 kg and 30 kg, respectively. Determine the speed of each block when B descends 1.5 m. The blocks are released from rest. Neglect the mass of the pulleys and cords.

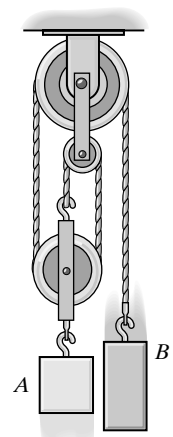

$3\, s_A + s_B = l$

$3\, \Delta s_A = -\Delta s_B$

$3\, v_A = -v_B$

$T_1 + V_1 = T_2 + V_2$

$$(0 + 0) + (0 + 0) = \frac{1}{2}(20)(v_A)^2 + \frac{1}{2}(30)(-3v_A)^2 + 20(9.81)\left(\frac{1.5}{3}\right) - 30(9.81)(1.5)$$

$v_A = 1.54$ m/s **Ans.**

$v_B = 4.62$ m/s **Ans.**

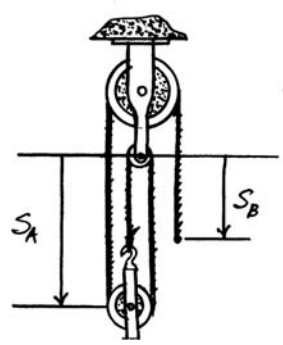

© 2010 Pearson Education, Inc., Upper Saddle River, NJ. All rights reserved. This material is protected under all copyright laws as they currently exist. No portion of this material may be reproduced, in any form or by any means, without permission in writing from the publisher.

***R1–40.** The assembly consists of two blocks A and B, which have masses of 20 kg and 30 kg, respectively. Determine the distance B must descend in order for A to achieve a speed of 3 m/s starting from rest.

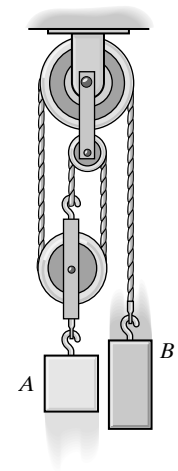

$3\,s_A + s_B = l$

$3\,\Delta s_A = -\Delta s_B$

$3\,v_A = -v_B$

$v_B = -9\text{ m/s}$

$T_1 + V_1 = T_2 + V_2$

$$(0 + 0) + (0 + 0) = \frac{1}{2}(20)(3)^2 + \frac{1}{2}(30)(-9)^2 + 20(9.81)\left(\frac{s_B}{3}\right) - 30(9.81)(s_B)$$

$s_B = 5.70\text{ m}$ **Ans.**

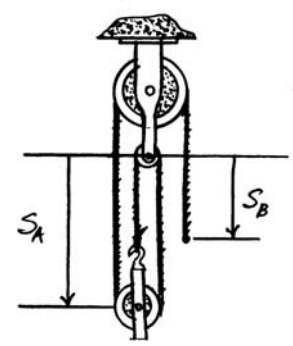

R1–41. Block A, having a mass m, is released from rest, falls a distance h and strikes the plate B having a mass $2m$. If the coefficient of restitution between A and B is e, determine the velocity of the plate just after collision. The spring has a stiffness k.

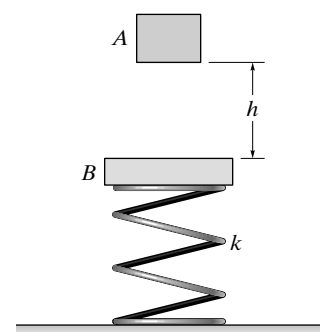

Just before impact, the velocity of A is

$T_1 + V_1 = T_2 + V_2$

$$0 + 0 = \frac{1}{2}mv_A^2 - mgh$$

$v_A = \sqrt{2gh}$

$(+\downarrow)$ $$e = \frac{(v_B)_2 - (v_A)_2}{\sqrt{2gh}}$$

$$e\sqrt{2gh} = (v_B)_2 - (v_A)_2 \qquad \textbf{(1)}$$

$(+\downarrow)$ $$\Sigma mv_1 = \Sigma mv_2$$

$$m(v_A) + 0 = m(v_A)_2 + 2m(v_B)_2 \qquad \textbf{(2)}$$

Solving Eqs. (1) and (2) for $(v_B)_2$ yields

$$(v_B)_2 = \frac{1}{3}\sqrt{2gh}\,(1 + e) \qquad \textbf{Ans.}$$

© 2010 Pearson Education, Inc., Upper Saddle River, NJ. All rights reserved. This material is protected under all copyright laws as they currently exist. No portion of this material may be reproduced, in any form or by any means, without permission in writing from the publisher.

R1–42. Block A, having a mass of 2 kg, is released from rest, falls a distance $h = 0.5$ m, and strikes the plate B having a mass of 3 kg. If the coefficient of restitution between A and B is $e = 0.6$, determine the velocity of the block just after collision. The spring has a stiffness $k = 30$ N/m.

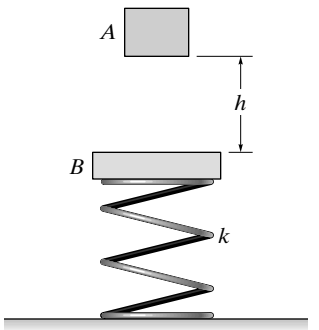

Just before impact, the velocity of A is

$$T_1 + V_1 = T_2 + V_2$$

$$0 + 0 = \frac{1}{2}(2)(v_A)_2^2 - 2(9.81)(0.5)$$

$$(v_A)_2 = \sqrt{2(9.81)(0.5)} = 3.132 \text{ m/s}$$

$$(+\downarrow) \qquad e = \frac{(v_B)_3 - (v_A)_3}{3.132 - 0}$$

$$0.6(3.132) = (v_B)_3 - (v_A)_3$$

$$1.879 = (v_B)_3 - (v_A)_3 \qquad \textbf{(1)}$$

$$(+\downarrow) \qquad \Sigma m v_2 = \Sigma m v_3$$

$$2(3.132) + 0 = 2(v_A)_3 + 3(v_B)_3 \qquad \textbf{(2)}$$

Solving Eqs. (1) and (2) for $(v_A)_3$ yields

$$(v_B)_3 = 2.00 \text{ m/s}$$

$$(v_A)_3 = 0.125 \text{ m/s} \qquad \textbf{Ans.}$$

R1–43. The cylindrical plug has a weight of 2 lb and it is free to move within the confines of the smooth pipe. The spring has a stiffness $k = 14$ lb/ft and when no motion occurs the distance $d = 0.5$ ft. Determine the force of the spring on the plug when the plug is at rest with respect to the pipe. The plug travels in a circle with a constant speed of 15 ft/s, which is caused by the rotation of the pipe about the vertical axis. Neglect the size of the plug.

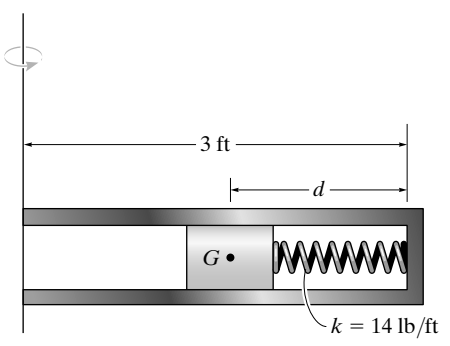

$$\overset{+}{\leftarrow} \Sigma F_n = m a_n; \qquad F_s = \frac{2}{32.2}\left[\frac{(15)^2}{3 - d}\right]$$

$$F_s = ks; \qquad F_s = 14(0.5 - d)$$

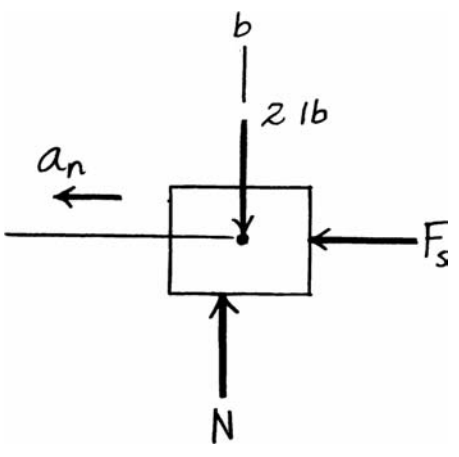

Thus,

$$14(0.5 - d) = \frac{2}{32.2}\left[\frac{(15)^2}{3 - d}\right]$$

$$(0.5 - d)(3 - d) = 0.9982$$

$$1.5 - 3.5d + d^2 = 0.9982$$

$$d^2 - 3.5d + 0.5018 = 0$$

Choosing the root < 0.5 ft

$$d = 0.1498 \text{ ft}$$

$$F_s = 14(0.5 - 0.1498) = 4.90 \text{ lb} \qquad \textbf{Ans.}$$

© 2010 Pearson Education, Inc., Upper Saddle River, NJ. All rights reserved. This material is protected under all copyright laws as they currently exist. No portion of this material may be reproduced, in any form or by any means, without permission in writing from the publisher.

***R1–44.** A 20-g bullet is fired horizontally into the 300-g block which rests on the smooth surface. After the bullet becomes embedded into the block, the block moves to the right 0.3 m before momentarily coming to rest. Determine the speed $(v_B)_1$ of the bullet. The spring has a stiffness $k = 200$ N/m and is originally unstretched.

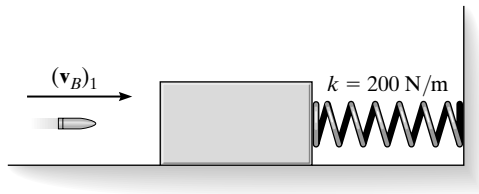

After collision

$$T_1 + \Sigma U_{1-2} = T_2$$

$$\frac{1}{2}(0.320)(v_2)^2 - \frac{1}{2}(200)(0.3)^2 = 0$$

$$v_2 = 7.50 \text{ m/s}$$

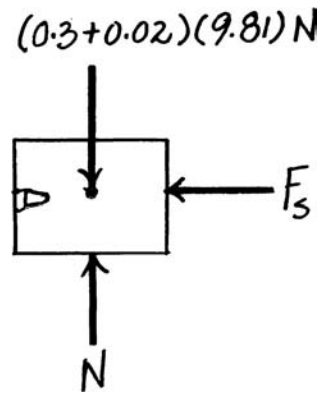

Impact

$$\Sigma m v_1 = \Sigma m v_2$$

$$0.02(v_B)_1 + 0 = 0.320(7.50)$$

$$(v_B)_1 = 120 \text{ m/s}$$ **Ans.**

R1–45. The 20-g bullet is fired horizontally at $(v_B)_1 = 1200$ m/s into the 300-g block which rests on the smooth surface. Determine the distance the block moves to the right before momentarily coming to rest. The spring has a stiffness $k = 200$ N/m and is originally unstretched.

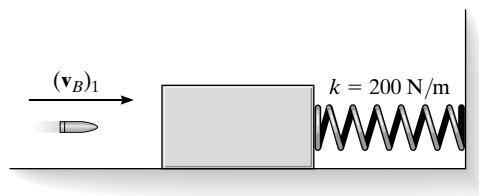

Impact

$$\Sigma m v_1 = \Sigma m v_2$$

$$0.02(1200) + 0 = 0.320(v_2)$$

$$v_2 = 75 \text{ m/s}$$

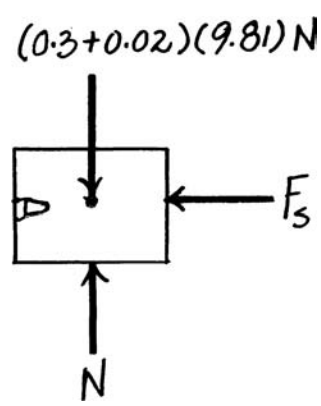

After collision;

$$T_1 + \Sigma U_{1-2} = T_2$$

$$\frac{1}{2}(0.320)(75)^2 - \frac{1}{2}(200)(x^2) = 0$$

$$x = 3 \text{ m}$$ **Ans.**

© 2010 Pearson Education, Inc., Upper Saddle River, NJ. All rights reserved. This material is protected under all copyright laws as they currently exist. No portion of this material may be reproduced, in any form or by any means, without permission in writing from the publisher.

R1–46. A particle of mass m is fired at an angle θ_0 with a velocity $\mathbf{v}_0$ in a liquid that develops a drag resistance $F = -kv$, where k is a constant. Determine the maximum or terminal speed reached by the particle.

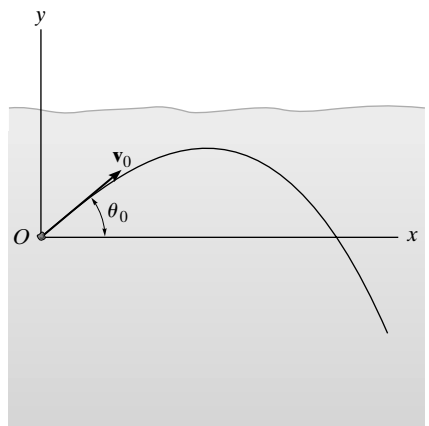

Equation of Motion: Applying Eq. 13–7, we have

$$\xrightarrow{+} \Sigma F_x = ma_x; \qquad -kv_x = ma_x \qquad a_x = -\frac{k}{m}v_x \qquad \textbf{[1]}$$

$$+\uparrow \Sigma F_y = ma_y; \qquad -mg - kv_y = ma_y \qquad a_y = -g - \frac{k}{m}v_y \qquad \textbf{[2]}$$

However, $v_x = \frac{dx}{dt}$, $a_x = \frac{d^2x}{dt^2}$, $v_y = \frac{dy}{dt}$ and $a_y = \frac{d^2y}{dt^2}$. Substitute these values into Eqs. [1] and [2], we have

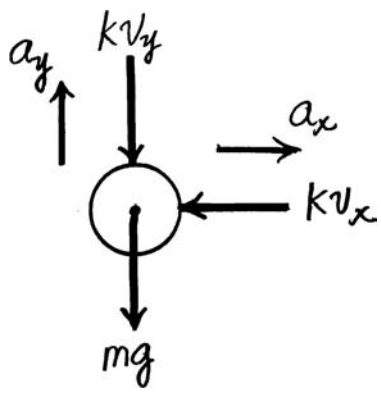

$$\frac{d^2x}{dt^2} + \frac{k}{m}\frac{dx}{dt} = 0 \qquad \textbf{[3]}$$

$$\frac{d^2y}{dt^2} + \frac{k}{m}\frac{dy}{dt} = -g \qquad \textbf{[4]}$$

The solution for the differential equation, Eq. [3], is in the form of

$$x = C_1 e^{-\frac{k}{m}t} + C_2 \qquad \textbf{[5]}$$

Thus,

$$\dot{x} = -\frac{C_1 k}{m} e^{-\frac{k}{m}t} \qquad \textbf{[6]}$$

However, at $t = 0$, $x = 0$ and $\dot{x} = v_0 \cos\theta_0$. Substitute these values into Eqs. [5] and [6], one obtains $C_1 = -\frac{m}{k} v_0 \cos\theta_0$ and $C_2 = \frac{m}{k} v_0 \cos\theta_0$. Substitute C_1 into Eq. [6] and rearrange. This yields

$$\dot{x} = e^{-\frac{k}{m}t}(v_0 \cos\theta_0) \qquad \textbf{[7]}$$

The solution for the differential equation, Eq. [4], is in the form of

$$y = C_3 e^{-\frac{k}{m}t} + C_4 - \frac{mg}{k}t \qquad \textbf{[8]}$$

Thus,

$$\dot{y} = -\frac{C_3 k}{m} e^{-\frac{k}{m}t} - \frac{mg}{k} \qquad \textbf{[9]}$$

However, at $t = 0$, $y = 0$ and $\dot{y} = v_0 \sin\theta_0$. Substitute these values into Eq. [8] and [9], one obtains $C_3 = -\frac{m}{k}\left(v_0 \sin\theta_0 + \frac{mg}{k}\right)$ and $C_4 = \frac{m}{k}\left(v_0 \sin\theta_0 + \frac{mg}{k}\right)$. Substitute C_3 into Eq. [9] and rearrange. This yields

$$\dot{y} = e^{-\frac{k}{m}t}\left(v_0 \sin\theta_0 + \frac{mg}{k}\right) - \frac{mg}{k} \qquad \textbf{[10]}$$

For the particle to achieve terminal speed, $t \to \infty$ and $e^{-\frac{k}{m}t} \to 0$. When this happen, from Eqs. [7] and [10], $v_x = \dot{x} = 0$ and $v_y = \dot{y} = -\frac{mg}{k}$. Thus,

$$v_{\max} = \sqrt{v_x^2 + v_y^2} = \sqrt{0^2 + \left(-\frac{mg}{k}\right)^2} = \frac{mg}{k} \qquad \textbf{Ans.}$$

© 2010 Pearson Education, Inc., Upper Saddle River, NJ. All rights reserved. This material is protected under all copyright laws as they currently exist. No portion of this material may be reproduced, in any form or by any means, without permission in writing from the publisher.

R1–47. A projectile of mass m is fired into a liquid at an angle θ_0 with an initial velocity $\mathbf{v}_0$ as shown. If the liquid develops a friction or drag resistance on the projectile which is proportional to its velocity, i.e., $F = -kv$, where k is a constant, determine the x and y components of its position at any instant. Also, what is the maximum distance $x_{\max}$ that it travels?

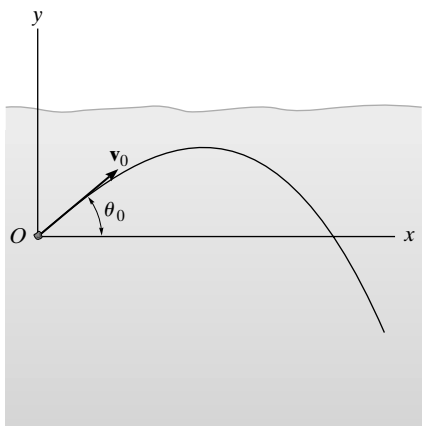

Equation of Motion: Applying Eq. 13–7, we have

$$\xrightarrow{+} \Sigma F_x = ma_x; \qquad -kv_x = ma_x \qquad a_x = -\frac{k}{m}v_x \qquad \textbf{[1]}$$

$$+\uparrow \Sigma F_y = ma_y; \qquad -mg - kv_y = ma_y \qquad a_y = -g - \frac{k}{m}v_y \qquad \textbf{[2]}$$

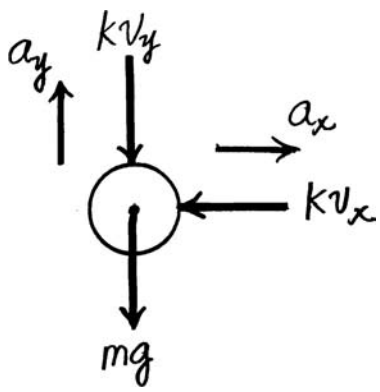

However, $v_x = \frac{dx}{dt}$, $a_x = \frac{d^2x}{dt^2}$, $v_y = \frac{dy}{dt}$ and $a_y = \frac{d^2y}{dt^2}$. Substituting these values into Eqs. [1] and [2], we have

$$\frac{d^2x}{dt^2} + \frac{k}{m}\frac{dx}{dt} = 0 \qquad \textbf{[3]}$$

$$\frac{d^2y}{dt^2} + \frac{k}{m}\frac{dy}{dt} = -g \qquad \textbf{[4]}$$

The solution for the differential equation, Eq. [3], is in the form of

$$x = C_1 e^{-\frac{k}{m}t} + C_2 \qquad \textbf{[5]}$$

Thus,

$$\dot{x} = -\frac{C_1 k}{m} e^{-\frac{k}{m}t} \qquad \textbf{[6]}$$

However, at $t = 0$, $x = 0$ and $\dot{x} = v_0 \cos\theta_0$. Substituting these values into Eq. [5] and [6], one can obtain $C_1 = -\frac{m}{k} v_0 \cos\theta_0$ and $C_2 = \frac{m}{k} v_0 \cos\theta_0$. Substituting C_1 and C_2 into Eq. [5] and rearrange yields

$$x = \frac{m}{k} v_0 \cos\theta_0 \left(1 - e^{-\frac{k}{m}t}\right) \qquad \textbf{Ans.}$$

When $t \to \infty$, $e^{-\frac{k}{m}t} \to 0$ and $x = x_{\max}$. Then,

$$x_{\max} = \frac{m}{k} v_0 \cos\theta_0 \qquad \textbf{Ans.}$$

The solution for the differential equation. Eq. [4], is in the form of

$$y = C_3 e^{-\frac{k}{m}t} + C_4 - \frac{mg}{k} t \qquad \textbf{[7]}$$

Thus,

$$\dot{y} = -\frac{C_3 k}{m} e^{-\frac{k}{m}t} - \frac{mg}{k} \qquad \textbf{[8]}$$

However, at $t = 0$, $y = 0$ and $\dot{y} = v_0 \sin\theta_0$. Substitute these values into Eq. [7] and [8], one can obtain $C_3 = -\frac{m}{k}\left(v_0 \sin\theta_0 + \frac{mg}{k}\right)$ and $C_4 = \frac{m}{k}\left(v_0 \sin\theta_0 + \frac{mg}{k}\right)$. Substitute C_3 and C_4 into Eq. [7] and rearrange yields

$$y = \frac{m}{k}\left(v_0 \sin\theta_0 + \frac{mg}{k}\right)\left(1 - e^{-\frac{k}{m}t}\right) - \frac{mg}{k} t \qquad \textbf{Ans.}$$

© 2010 Pearson Education, Inc., Upper Saddle River, NJ. All rights reserved. This material is protected under all copyright laws as they currently exist. No portion of this material may be reproduced, in any form or by any means, without permission in writing from the publisher.

***R1–48.** The position of particles A and B are $\mathbf{r}_A = \{3t\mathbf{i} + 9t(2 - t)\mathbf{j}\}$ m and $\mathbf{r}_B = \{3(t^2 - 2t + 2)\mathbf{i} + 3(t - 2)\mathbf{j}\}$ m, respectively, where t is in seconds. Determine the point where the particles collide and their speeds just before the collision. How long does it take before the collision occurs?

When collision occurs, $\mathbf{r}_A = \mathbf{r}_B$.

$$3t = 3(t^2 - 2t + 2)$$

$$t^2 - 3t + 2 = 0$$

$$t = 1\text{ s}, \qquad t = 2\text{ s}$$

Also,

$$9t(2 - t) = 3(t - 2)$$

$$3t^2 - 5t - 2 = 0$$

The positive root is $t = 2$ s

Thus,

$$t = 2\text{ s}$$ **Ans.**

$$x = 3(2) = 6\text{ m} \qquad y = 9(2)(2 - 2) = 0$$

Hence, (6 m, 0) **Ans.**

$$\mathbf{v}_A = \frac{d\mathbf{r}_A}{dt} = 3\mathbf{i} + (18 - 18t)\mathbf{j}$$

$$\mathbf{v}_A|_{t=2} = \{3\mathbf{i} - 18\mathbf{j}\}\text{ m/s}$$

$$v_A = \sqrt{(3)^2 + (-18)^2} = 18.2\text{ m/s}$$ **Ans.**

$$\mathbf{v}_B = \frac{d\mathbf{r}_B}{dt} = 3(2t - 2)\mathbf{i} + 3\mathbf{j}$$

$$\mathbf{v}_B|_{t=2} = \{6\mathbf{i} + 3\mathbf{j}\}\text{ m/s}$$

$$v_B = \sqrt{(6)^2 + (3)^2} = 6.71\text{ m/s}$$ **Ans.**

© 2010 Pearson Education, Inc., Upper Saddle River, NJ. All rights reserved. This material is protected under all copyright laws as they currently exist. No portion of this material may be reproduced, in any form or by any means, without permission in writing from the publisher.

R1–49. Determine the speed of the automobile if it has the acceleration shown and is traveling on a road which has a radius of curvature of $\rho = 50$ m. Also, what is the automobile's rate of increase in speed?

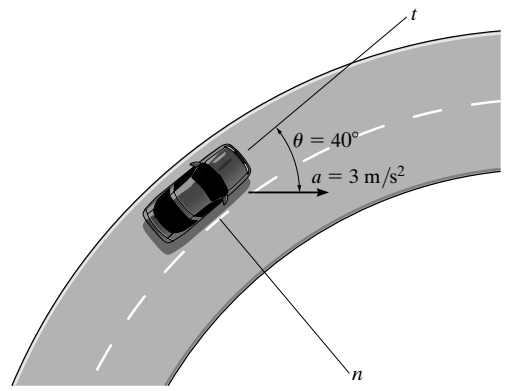

$$a_n = \frac{v^2}{\rho}$$

$$3 \sin 40° = \frac{v^2}{50}$$

$v = 9.82$ m/s **Ans.**

$a_t = 3 \cos 40° = 2.30$ m/s^2 **Ans.**

R1–50. The spring has a stiffness $k = 3$ lb/ft and an unstretched length of 2 ft. If it is attached to the 5-lb smooth collar and the collar is released from rest at A, determine the speed of the collar just before it strikes the end of the rod at B. Neglect the size of the collar.

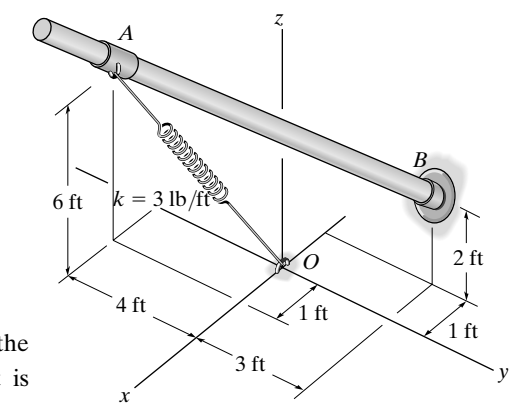

Potential Energy: Datum is set at point B. The collar is $(6 - 2) = 4$ ft *above* the datum when it is at A. Thus, its gravitational potential energy at this point is $5(4) = 20.0$ ft · lb. The length of the spring when the collar is at points A and B are calculated as $l_{OA} = \sqrt{1^2 + 4^2 + 6^2} = \sqrt{53}$ ft and $l_{OB} = \sqrt{1^2 + 3^2 + 2^2} = \sqrt{14}$ ft, respectively. The initial and final elastic potential energy are $\frac{1}{2}(3)\left(\sqrt{53} - 2\right)^2 = 41.82$ ft · lb and $\frac{1}{2}(3)\left(\sqrt{14} - 2\right)^2 = 4.550$ ft · lb, respectively.

Conservation of Energy: Applying Eq. 14–22, we have

$$\Sigma T_A + \Sigma V_A = \Sigma T_B + \Sigma V_B$$

$$0 + 20.0 + 41.82 = \frac{1}{2}\left(\frac{5}{32.2}\right)v_B^2 + 4.550$$

$$v_B = 27.2 \text{ ft/s}$$ **Ans.**