© 2010 Pearson Education, Inc., Upper Saddle River, NJ. All rights reserved. This material is protected under all copyright laws as they currently exist. No portion of this material may be reproduced, in any form or by any means, without permission in writing from the publisher.

•20–1. The anemometer located on the ship at A spins about its own axis at a rate ω_s, while the ship rolls about the x axis at the rate ω_x and about the y axis at the rate ω_y. Determine the angular velocity and angular acceleration of the anemometer at the instant the ship is level as shown. Assume that the magnitudes of all components of angular velocity are constant and that the rolling motion caused by the sea is independent in the x and y directions.

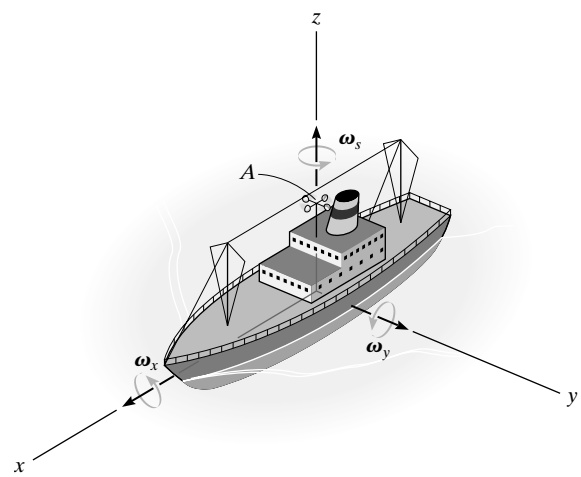

$$\omega = \omega_x \mathbf{i} + \omega_y \mathbf{j} + \omega_z \mathbf{k} \qquad \textbf{Ans.}$$

Let $\Omega = \omega_x \mathbf{i} + \omega_y \mathbf{j}$.

Since ω_x and ω_y are independent of one another, they do not change their direction or magnitude. Thus,

$$\alpha = \dot{\omega} = \left(\dot{\omega}\right)_{xyz} + (\omega_x + \omega_y) \times \omega_z$$

$$\alpha = \mathbf{0} + (\omega_x \mathbf{i} + \omega_y \mathbf{j}) \times (\omega_y \mathbf{k})$$

$$\alpha = \omega_y \omega_x \mathbf{i} - \omega_x \omega_z \mathbf{j} \qquad \textbf{Ans.}$$

20–2. The motion of the top is such that at the instant shown it rotates about the z axis at $\omega_1 = 0.6$ rad/s, while it spins at $\omega_2 = 8$ rad/s. Determine the angular velocity and angular acceleration of the top at this instant. Express the result as a Cartesian vector.

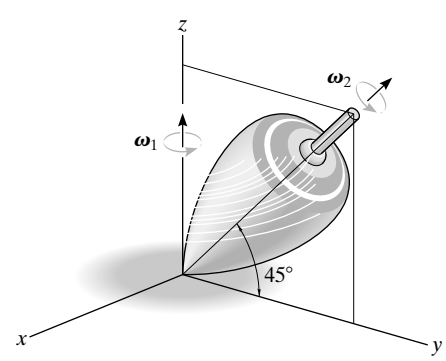

$$\omega = \omega_1 + \omega_2$$

$$\omega = 0.6\mathbf{k} + 8\cos 45°\,\mathbf{j} + 8\sin 45°\mathbf{k}$$

$$\omega = \{5.66\mathbf{j} + 6.26\mathbf{k}\}\ \text{rad/s} \qquad \textbf{Ans.}$$

$$\dot{\omega} = \dot{\omega}_1 + \dot{\omega}_2$$

Let x, y, z axes have angular velocity of $\Omega = \omega_1$, thus

$$\dot{\omega}_1 = \mathbf{0}$$

$$\omega_2 = \left(\omega_2\right)_{xyz} + (\omega_1 \times \omega_2) = \mathbf{0} + (0.6\mathbf{k}) \times (8\cos 45°\mathbf{j} + 8\sin 45°\mathbf{k}) = -3.394\mathbf{i}$$

$$\alpha = \omega = \{-3.39\mathbf{i}\}\ \text{rad/s}^2 \qquad \textbf{Ans.}$$

© 2010 Pearson Education, Inc., Upper Saddle River, NJ. All rights reserved. This material is protected under all copyright laws as they currently exist. No portion of this material may be reproduced, in any form or by any means, without permission in writing from the publisher.

20–3. At a given instant, the satellite dish has an angular motion $\omega_1 = 6$ rad/s and $\dot{\omega}_1 = 3$ rad/s^2 about the z axis. At this same instant $\theta = 25°$, the angular motion about the x axis is $\omega_2 = 2$ rad/s, and $\dot{\omega}_2 = 1.5$ rad/s^2. Determine the velocity and acceleration of the signal horn A at this instant.

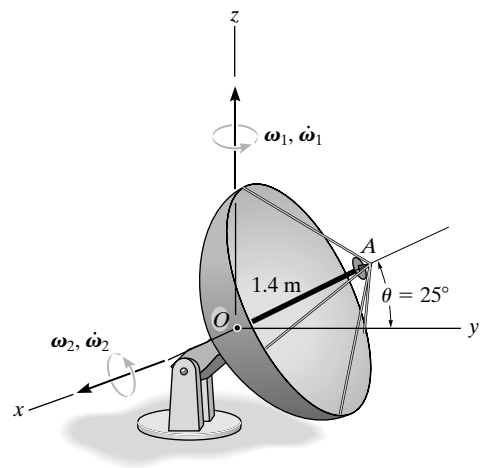

Angular Velocity: The coordinate axes for the fixed frame (X, Y, Z) and rotating frame (x, y, z) at the instant shown are set to be coincident. Thus, the angular velocity of the satellite at this instant (with reference to X, Y, Z) can be expressed in terms of **i, j, k** components.

$$\omega = \omega_1 + \omega_2 = \{2\mathbf{i} + 6\mathbf{k}\} \text{ rad/s}$$

Angular Acceleration: The angular acceleration α will be determined by investigating separately the time rate of change of *each angular velocity component* with respect to the fixed XYZ frame. ω_2 is observed to have a *constant direction* from the rotating xyz frame if this frame is rotating at $\Omega = \omega_1 = \{6\mathbf{k}\}$ rad/s. Applying Eq. 20–6 with $(\dot{\omega}_2)_{xyz} = \{1.5\mathbf{i}\}$ rad/s^2. we have

$$\dot{\omega}_2 = (\dot{\omega}_2)_{xyz} + \omega_1 \times \omega_2 = 1.5\mathbf{i} + 6\mathbf{k} \times 2\mathbf{i} = \{1.5\mathbf{i} + 12\mathbf{j}\} \text{ rad/s}^2$$

Since ω_1 is always directed along the Z axis ($\Omega = \mathbf{0}$), then

$$\dot{\omega}_1 = (\dot{\omega}_1)_{xyz} + \mathbf{0} \times \omega_1 = \{3\mathbf{k}\} \text{ rad/s}^2$$

Thus, the angular acceleration of the satellite is

$$\alpha = \dot{\omega}_1 + \dot{\omega}_2 = \{1.5\mathbf{i} + 12\mathbf{j} + 3\mathbf{k}\} \text{ rad/s}^2$$

Velocity and Acceleration: Applying Eqs. 20–3 and 20–4 with the ω and α obtained above and $\mathbf{r}_A = \{1.4 \cos 25°\mathbf{j} + 1.4 \sin 25°\mathbf{k}\}$ m $= \{1.2688\mathbf{j} + 0.5917\mathbf{k}\}$ m, we have

$$\mathbf{v}_A = \omega \times \mathbf{r}_A = (2\mathbf{i} + 6\mathbf{k}) \times (1.2688\mathbf{j} + 0.5917\mathbf{k})$$

$$= \{-7.61\mathbf{i} - 1.18\mathbf{j} + 2.54\mathbf{k}\} \text{ m/s} \qquad \textbf{Ans.}$$

$$\mathbf{a}_A = \alpha \times \mathbf{r}_A + \omega \times (\omega \times \mathbf{r}_A)$$

$$= (1.3\mathbf{i} + 12\mathbf{j} + 3\mathbf{k}) \times (1.2688\mathbf{j} + 0.5917\mathbf{k})$$

$$+ (2\mathbf{i} + 6\mathbf{k}) \times [(2\mathbf{i} + 6\mathbf{k}) \times (1.2688\mathbf{j} + 0.5917\mathbf{k})]$$

$$= \{10.4\mathbf{i} - 51.6\mathbf{j} - 0.463\mathbf{k}\} \text{ m/s}^2 \qquad \textbf{Ans.}$$

© 2010 Pearson Education, Inc., Upper Saddle River, NJ. All rights reserved. This material is protected under all copyright laws as they currently exist. No portion of this material may be reproduced, in any form or by any means, without permission in writing from the publisher.

***20–4.** The fan is mounted on a swivel support such that at the instant shown it is rotating about the z axis at $\omega_1 = 0.8$ rad/s, which is increasing at 12 rad/s^2. The blade is spinning at $\omega_2 = 16$ rad/s, which is decreasing at 2 rad/s^2. Determine the angular velocity and angular acceleration of the blade at this instant.

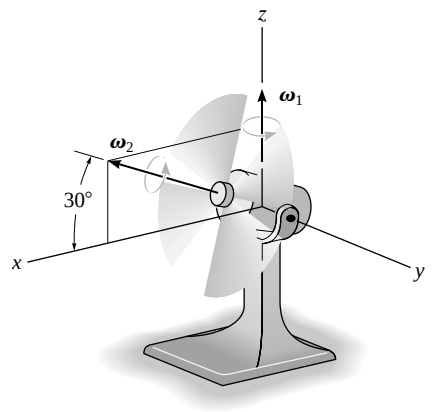

$$\omega = \omega_1 + \omega_2$$

$$= 0.8\mathbf{k} + (16\cos 30°\mathbf{i} + 16\sin 30°\mathbf{k})$$

$$= \{13.9\mathbf{i} + 8.80\mathbf{k}\}\ \text{rad/s} \qquad \textbf{Ans.}$$

For ω_2, $\Omega = \omega_1 = \{0.8\mathbf{k}\}$ rad/s.

$$(\dot{\omega}_2)_{XYZ} = (\dot{\omega}_2)_{xyz} + \Omega \times \omega_2$$

$$= (-2\cos 30°\mathbf{i} - 2\sin 30°\mathbf{k}) + (0.8\mathbf{k}) \times (16\cos 30°\mathbf{i} + 16\sin 30°\mathbf{k})$$

$$= \{-1.7320\mathbf{i} + 11.0851\mathbf{j} - 1\mathbf{k}\}\ \text{rad/s}^2$$

For ω_1, $\Omega = \mathbf{0}$.

$$(\omega_1)_{XYZ} = (\omega_1)_{xyz} + \Omega \times \omega_1$$

$$= (12\mathbf{k}) + 0$$

$$= \{12\mathbf{k}\}\ \text{rad/s}^2$$

$$\alpha = \dot{\omega} = (\dot{\omega}_1)_{XYZ} + (\dot{\omega}_2)_{XYZ}$$

$$\alpha = 12\mathbf{k} + (-1.7320\mathbf{i} + 11.0851\mathbf{j} - 1\mathbf{k})$$

$$= \{-1.73\mathbf{i} + 11.1\mathbf{j} + 11.0\mathbf{k}\}\ \text{rad/s}^2 \qquad \textbf{Ans.}$$

© 2010 Pearson Education, Inc., Upper Saddle River, NJ. All rights reserved. This material is protected under all copyright laws as they currently exist. No portion of this material may be reproduced, in any form or by any means, without permission in writing from the publisher.

•20–5. Gears A and B are fixed, while gears C and D are free to rotate about the shaft S. If the shaft turns about the z axis at a constant rate of $\omega_1 = 4$ rad/s, determine the angular velocity and angular acceleration of gear C.

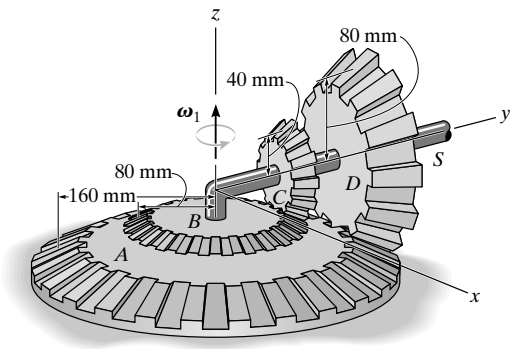

The resultant angular velocity $\omega = \omega_1 + \omega_2$ is always directed along the instantaneous axis of zero velocity IA.

$$\omega = \omega_1 + \omega_2$$

$$\frac{2}{\sqrt{5}}\omega\mathbf{j} - \frac{1}{\sqrt{5}}\omega\mathbf{k} = 4\mathbf{k} + \omega_2\mathbf{j}$$

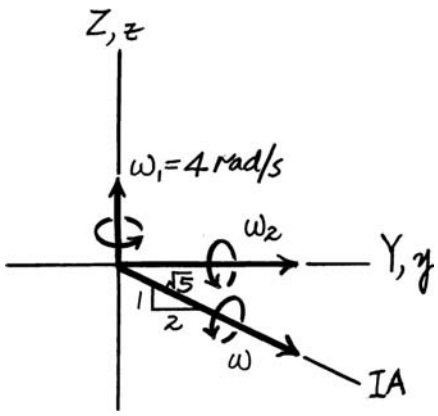

Equating $\mathbf{j}$ and $\mathbf{k}$ components

$$-\frac{1}{\sqrt{5}}\omega = 4 \qquad \omega = -8.944 \text{ rad/s}$$

$$\omega_2 = \frac{2}{\sqrt{5}}(-8.944) = -8.0 \text{ rad/s}$$

Hence $\quad \omega = \frac{2}{\sqrt{5}}(-8.944)\mathbf{j} - \frac{1}{\sqrt{5}}(-8.944)\mathbf{k} = \{-8.0\mathbf{j} + 4.0\mathbf{k}\}$ rad/s **Ans.**

For ω_2, $\Omega = \omega_1 = \{4\mathbf{k}\}$ rad/s.

$$(\dot{\omega}_2)_{XYZ} = (\dot{\omega}_2)_{xyz} + \Omega \times \omega_2$$

$$= 0 + (4\mathbf{k}) \times (-8\mathbf{j})$$

$$= \{32\mathbf{i}\} \text{ rad/s}^2$$

For ω_1, $\Omega = \mathbf{0}$.

$$(\dot{\omega}_1)_{XYZ} = (\dot{\omega}_1)_{xyz} + \Omega \times \omega_1 = 0 + 0 = 0$$

$$\alpha = \dot{\omega} = (\dot{\omega}_1)_{XYZ} + (\dot{\omega}_2)_{XYZ}$$

$$\alpha = \mathbf{0} + (32\mathbf{i}) = \{32\mathbf{i}\} \text{ rad/s}^2$$ **Ans.**

© 2010 Pearson Education, Inc., Upper Saddle River, NJ. All rights reserved. This material is protected under all copyright laws as they currently exist. No portion of this material may be reproduced, in any form or by any means, without permission in writing from the publisher.

20–6. The disk rotates about the z axis $\omega_z = 0.5$ rad/s without slipping on the horizontal plane. If at this same instant ω_z is increasing at $\dot{\omega}_z = 0.3$ rad/s^2, determine the velocity and acceleration of point A on the disk.

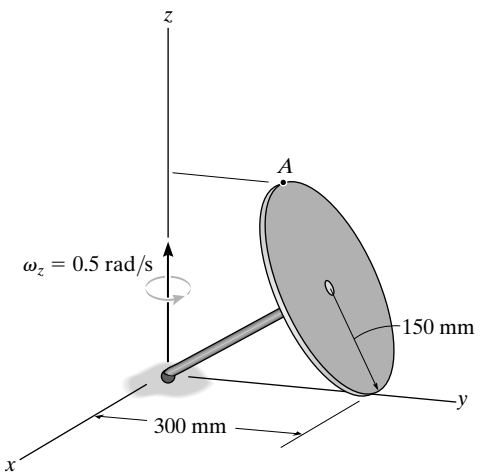

Angular Velocity: The coordinate axes for the fixed frame (X, Y, Z) and rotating frame (x, y, z) at the instant shown are set to be coincident. Thus, the angular velocity of the disk at this instant (with reference to X, Y, Z) can be expressed in terms of **i, j, k** components. Since the disk rolls without slipping, then its angular velocity $\omega = \omega_s + \omega_z$ is always directed along the instantaneous axis of zero velocity (y axis). Thus,

$$\omega = \omega_s + \omega_z$$

$$-\omega\mathbf{j} = -\omega_s \cos 30°\mathbf{j} - \omega_s \sin 30°\mathbf{k} + 0.5\mathbf{k}$$

Equating **k** and **j** components, we have

$$0 = -\omega_s \sin 30° + 0.5 \qquad \omega_s = 1.00 \text{ rad/s}$$

$$-\omega = -1.00 \cos 30° \qquad \omega = 0.8660 \text{ rad/s}$$

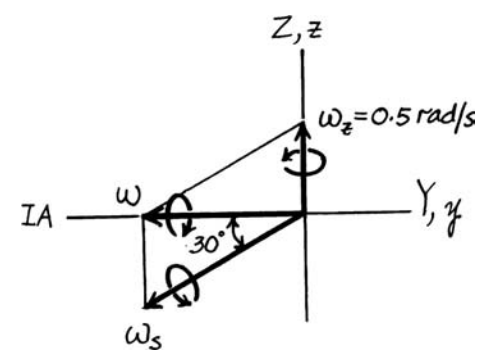

Angular Acceleration: The angular acceleration α will be determined by investigating the time rate of change of *angular velocity* with respect to the fixed XYZ frame. Since ω always lies in the fixed X–Y plane, then $\omega = \{-0.8660\mathbf{j}\}$ rad/s is observed to have a *constant direction* from the rotating xyz frame if this frame is rotating at $\Omega = \omega_z = \{0.5\mathbf{k}\}$ rad/s. $(\dot{\omega}_s)_{xyz}$

$$= \left\{-\frac{0.3}{\sin 30°}(\cos 30°)\,\mathbf{j} - \frac{0.3}{\sin 30°}(\sin 30°)\,\mathbf{k}\right\} \text{rad/s}^2 = \{-0.5196\mathbf{j} - 0.3\mathbf{k}\} \text{ rad/s}^2.$$

Thus, $(\dot{\omega})_{xyz} = \dot{\omega}_z + (\dot{\omega}_x)_{xyz} = \{-0.5196\mathbf{j}\}$ rad/s^2. Applying Eq. 20–6, we have

$$\alpha = \dot{\omega} = (\dot{\omega})_{xyz} + \omega_z \times \omega$$

$$= -0.5196\mathbf{j} + 0.5\mathbf{k} \times (-0.8660\mathbf{j})$$

$$= \{0.4330\mathbf{i} - 0.5196\mathbf{j}\} \text{ rad/s}^2$$

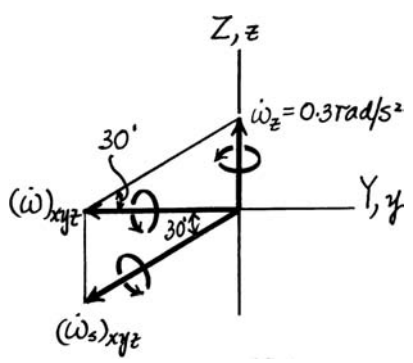

Velocity and Acceleration: Applying Eqs. 20–3 and 20–4 with the ω and α obtained above and $\mathbf{r}_A = \{(0.3 - 0.3\cos 60°)\mathbf{j} + 0.3 \sin 60°\mathbf{k}\}$ m $= \{0.15\mathbf{j} + 0.2598\mathbf{k}\}$ m, we have

$$\mathbf{v}_A = \omega \times \mathbf{r}_A = (-0.8660\mathbf{j}) \times (0.15\mathbf{j} + 0.2598\mathbf{k}) = \{-0.225\mathbf{i}\} \text{ m/s} \qquad \textbf{Ans.}$$

$$\mathbf{a}_A = \alpha \times \mathbf{r}_A + \omega \times (\omega \times \mathbf{r}_A)$$

$$= (0.4330\mathbf{i} - 0.5196\mathbf{j}) \times (0.15\mathbf{j} + 0.2598\mathbf{k})$$

$$+ (-0.8660\mathbf{j}) \times [(-0.8660\mathbf{j}) \times (0.15\mathbf{j} + 0.2598\mathbf{k})]$$

$$= \{-0.135\mathbf{i} - 0.1125\mathbf{j} - 0.130\mathbf{k}\} \text{ m/s}^2 \qquad \textbf{Ans.}$$

© 2010 Pearson Education, Inc., Upper Saddle River, NJ. All rights reserved. This material is protected under all copyright laws as they currently exist. No portion of this material may be reproduced, in any form or by any means, without permission in writing from the publisher.

20–7. If the top gear B rotates at a constant rate of $\boldsymbol{\omega}$, determine the angular velocity of gear A, which is free to rotate about the shaft and rolls on the bottom fixed gear C.

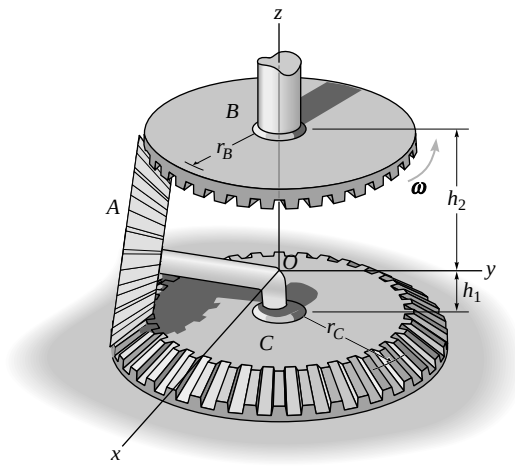

$$\mathbf{v}_P = \omega\mathbf{k} \times (-r_B\,\mathbf{j}) = \omega r_B\,\mathbf{i}$$

Also,

$$\mathbf{v}_P = \omega_A \times (-r_B\,\mathbf{j} + h_2\mathbf{k}) = \begin{vmatrix} \mathbf{i} & \mathbf{j} & \mathbf{k} \\ \omega_{Ax} & \omega_{Ay} & \omega_{Az} \\ 0 & -r_B & h_2 \end{vmatrix}$$

$$= (\omega_{Ay}\,h_2 + \omega_{Az}\,r_B)\mathbf{i} - (\omega_{Ax}\,h_2)\mathbf{j} - \omega_{Ax}\,r_B\,\mathbf{k}$$

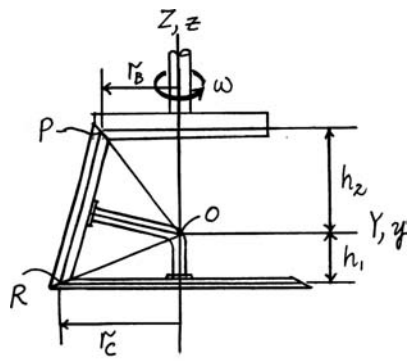

Thus,

$$\omega r_B = \omega_{Ay}\,h_2 + \omega_{Az}\,r_B \qquad \textbf{(1)}$$

$$0 = \omega_{Ax}\,h_2$$

$$0 = \omega_{Ax}\,r_B$$

$$\omega_{Ax} = 0$$

$$\mathbf{v}_R = \mathbf{0} = \begin{vmatrix} \mathbf{i} & \mathbf{j} & \mathbf{k} \\ 0 & \omega_{Ay} & \omega_{Az} \\ 0 & -r_C & -h_1 \end{vmatrix} = (-\omega_{Ay}\,h_1 + \omega_{Az}\,r_C)\mathbf{i}$$

$$\omega_{Ay} = \omega_{Az}\left(\frac{r_C}{h_1}\right)$$

From Eq. (1)

$$\omega r_B = \omega_{Az}\left[\left(\frac{r_C\,h_2}{h_1}\right) + r_B\right]$$

$$\omega_{Az} = \frac{r_B\,h_1\,\omega}{r_C\,h_2 + r_B\,h_1}; \qquad \omega_{Ay} = \left(\frac{r_C}{h_1}\right)\left(\frac{r_B\,h_1\omega}{r_C\,h_2 + r_B\,h_1}\right)$$

$$\omega_A = \left(\frac{r_C}{h_1}\right)\left(\frac{r_B\,h_1\,\omega}{r_C\,h_2 + r_B\,h_1}\right)\mathbf{j} + \left(\frac{r_B\,h_1\omega}{r_C\,h_2 + r_B\,h_1}\right)\mathbf{k} \qquad \textbf{Ans.}$$

© 2010 Pearson Education, Inc., Upper Saddle River, NJ. All rights reserved. This material is protected under all copyright laws as they currently exist. No portion of this material may be reproduced, in any form or by any means, without permission in writing from the publisher.

***20–8.** The telescope is mounted on the frame F that allows it to be directed to any point in the sky. At the instant $\theta = 30°$, the frame has an angular acceleration of $\alpha_{y'} = 0.2\ \text{rad/s}^2$ and an angular velocity of $\omega_{y'} = 0.3\ \text{rad/s}$ about the y' axis, and $\ddot{\theta} = 0.5\ \text{rad/s}^2$ while $\dot{\theta} = 0.4\ \text{rad/s}$. Determine the velocity and acceleration of the observing capsule at C at this instant.

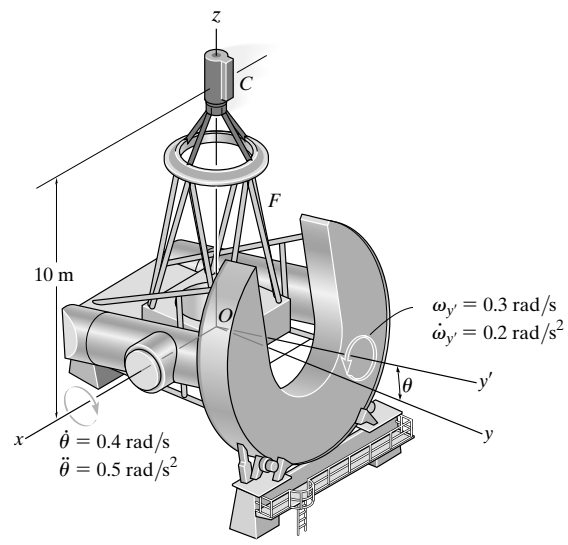

Angular Velocity: The coordinate axes for the fixed frame (X, Y, Z) and rotating frame (x, y, z) at the instant shown are coincident. Thus, the angular velocity of the frame at this instant is

$$\omega = \dot{\theta} + \omega_{y'} = -0.4\mathbf{i} + (0.3\cos 30°\mathbf{j} + 0.3\sin 30°\mathbf{k})$$

$$= [-0.4\mathbf{i} + 0.2598\mathbf{j} + 0.15\mathbf{k}]\ \text{rad/s}$$

Angular Acceleration: $\omega_{y'}$ is observed to have a constant direction relative to the rotating xyz frame which rotates at $\Omega = \dot{\theta} = [-0.4\mathbf{i}]\ \text{rad/s}$. With $(\dot{\omega}_{y'})_{xyz} = \alpha_{y'} = 0.2\cos 30°\mathbf{j} + 0.2\sin 30°\mathbf{k} = [0.1732\mathbf{j} + 0.1\mathbf{k}]\ \text{rad/s}^2$, we obtain

$$\dot{\omega}_{y'} = (\dot{\omega}_{y'})_{xyz} + \Omega \times \omega_{y'}$$

$$= (0.1732\mathbf{j} + 0.1\mathbf{k}) + (-0.4\mathbf{i}) \times (0.3\cos 30°\mathbf{j} + 0.3\sin 30°\mathbf{k})$$

$$= [0.2332\mathbf{j} - 0.003923\mathbf{k}]\ \text{rad/s}^2$$

Since $\dot{\theta}$ is always directed along the X axis $(\Omega = 0)$, then

$$\ddot{\theta} = (\ddot{\theta})_{xyz} + 0 \times \dot{\theta} = [-0.5\mathbf{i}]\ \text{rad/s}^2$$

Thus, the angular acceleration of the frame is

$$\alpha = \dot{\omega}_{y'} + \ddot{\theta} = [-0.5\mathbf{i} + 0.2332\mathbf{j} - 0.003923\mathbf{k}]\ \text{rad/s}^2$$

Velocity and Acceleration:

$$\mathbf{v}_c = \omega \times \mathbf{r}_{oc} = (-0.4\mathbf{i} + 0.2598\mathbf{j} + 0.15\mathbf{k}) \times (10\mathbf{k})$$

$$= [2.598\mathbf{i} + 4.00\mathbf{j}]\ \text{m/s} = [2.60\mathbf{i} + 4.00\mathbf{j}]\ \text{m/s} \qquad \textbf{Ans.}$$

$$\mathbf{a}_c = \alpha \times \mathbf{r}_{oc} + \omega \times (\omega \times \mathbf{r}_{oc})$$

$$= (-0.5\mathbf{i} + 0.2332\mathbf{j} - 0.003923\mathbf{k}) \times (10\mathbf{k}) + (-0.4\mathbf{i} + 0.2598\mathbf{j} + 0.15\mathbf{k}) \times [(-0.4\mathbf{i} + 0.2598\mathbf{j} + 0.15\mathbf{k}) \times (10\mathbf{k})]$$

$$= [1.732\mathbf{i} + 5.390\mathbf{j} - 2.275\mathbf{k}]\ \text{m/s}^2$$

$$= [1.73\mathbf{i} + 5.39\mathbf{j} - 2.275\mathbf{k}]\ \text{m/s}^2 \qquad \textbf{Ans.}$$

© 2010 Pearson Education, Inc., Upper Saddle River, NJ. All rights reserved. This material is protected under all copyright laws as they currently exist. No portion of this material may be reproduced, in any form or by any means, without permission in writing from the publisher.

•20–9. At the instant when $\theta = 90°$, the satellite's body is rotating with an angular velocity of $\omega_1 = 15$ rad/s and angular acceleration of $\dot{\omega}_1 = 3$ rad/s^2. Simultaneously, the solar panels rotate with an angular velocity of $\omega_2 = 6$ rad/s and angular acceleration of $\dot{\omega}_2 = 1.5$ rad/s^2. Determine the velocity and acceleration of point B on the solar panel at this instant.

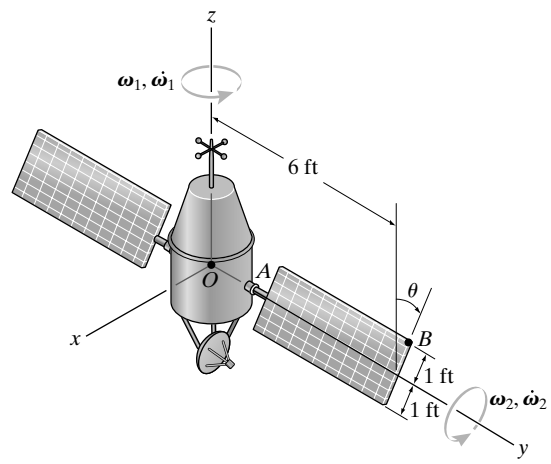

Here, the solar panel rotates about a fixed point O. The XYZ fixed reference frame is set to coincide with the xyz rotating frame at the instant considered. Thus, the angular velocity of the solar panel can be obtained by vector addition of ω_1 and ω_2.

$$\omega = \omega_1 + \omega_2 = [6\mathbf{j} + 15\mathbf{k}] \text{ rad/s} \qquad \textbf{Ans.}$$

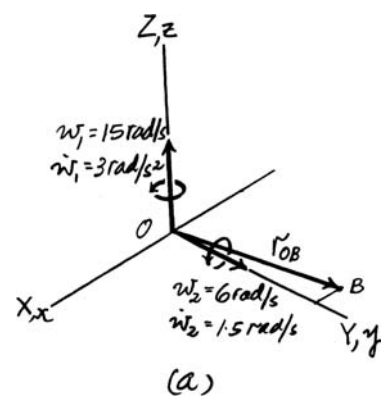

The angular acceleration of the solar panel can be determined from

$$\alpha = \dot{\omega} = \dot{\omega}_1 + \dot{\omega}_2$$

If we set the xyz frame to have an angular velocity of $\Omega = \omega_1 = [15\mathbf{k}]$ rad/s, then the direction of ω_2 will remain constant with respect to the xyz frame, which is along the y axis. Thus,

$$\dot{\omega}_2 = (\dot{\omega}_2)_{xyz} + \omega_1 \times \omega_2 = 1.5\mathbf{j} + (15\mathbf{k} \times 6\mathbf{j}) = [-90\mathbf{i} + 1.5\mathbf{j}] \text{ rad/s}^2$$

Since ω_1 is always directed along the Z axis when $\Omega = \omega_1$, then

$$\dot{\omega}_1 = (\dot{\omega}_1)_{xyz} + \omega_1 \times \omega_1 = [3\mathbf{k}] \text{ rad/s}^2$$

Thus,

$$\alpha = 3\mathbf{k} + (-90\mathbf{i} + 1.5\mathbf{j})$$
$$= [-90\mathbf{i} + 1.5\mathbf{j} + 3\mathbf{k}] \text{ rad/s}^2$$

When $\theta = 90°$, $\mathbf{r}_{OB} = [-1\mathbf{i} + 6\mathbf{j}]$ ft. Thus,

$$\mathbf{v}_B = \omega \times r_{OB} = (6\mathbf{j} + 15\mathbf{k}) \times (-1\mathbf{i} + 6\mathbf{j})$$
$$= [-90\mathbf{i} - 15\mathbf{j} + 6\mathbf{k}] \text{ ft/s} \qquad \textbf{Ans.}$$

and

$$\mathbf{a}_B = \alpha \times \mathbf{r}_{OB} + \omega \times (\omega \times \mathbf{r}_{OB})$$
$$= (-90\mathbf{i} + 15\mathbf{j} + 3\mathbf{k}) \times (-1\mathbf{i} + 6\mathbf{j}) + (6\mathbf{j} + 15\mathbf{k}) \times [(6\mathbf{j} + 15\mathbf{k}) \times (-1\mathbf{i} + 6\mathbf{j})]$$
$$= [243\mathbf{i} - 1353\mathbf{j} + 1.5\mathbf{k}] \text{ ft/s}^2 \qquad \textbf{Ans.}$$

© 2010 Pearson Education, Inc., Upper Saddle River, NJ. All rights reserved. This material is protected under all copyright laws as they currently exist. No portion of this material may be reproduced, in any form or by any means, without permission in writing from the publisher.

20–10. At the instant when $\theta = 90°$, the satellite's body travels in the x direction with a velocity of $\mathbf{v}_O = \{500\mathbf{i}\}$ m/s and acceleration of $\mathbf{a}_O = \{50\mathbf{i}\}$ m/s^2. Simultaneously, the body also rotates with an angular velocity of $\omega_1 = 15$ rad/s and angular acceleration of $\dot{\omega}_1 = 3$ rad/s^2. At the same time, the solar panels rotate with an angular velocity of $\omega_2 = 6$ rad/s and angular acceleration of $\dot{\omega}_2 = 1.5$ rad/s^2 Determine the velocity and acceleration of point B on the solar panel.

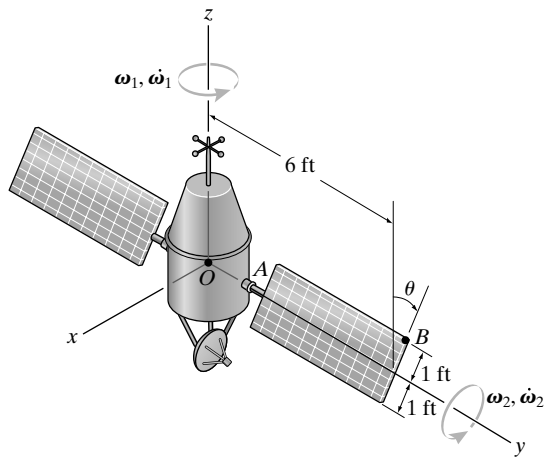

The XYZ translating reference frame is set to coincide with the xyz rotating frame at the instant considered. Thus, the angular velocity of the solar panel at this instant can be obtained by vector addition of ω_1 and ω_2.

$$\omega = \omega_1 + \omega_2 = [6\mathbf{j} + 15\mathbf{k}] \text{ rad/s}$$

The angular acceleration of the solar panel can be determined from

$$\alpha = \dot{\omega} = \omega_1 + \omega_2$$

If we set the xyz frame to have an angular velocity of $\Omega = \omega_1 = [15\mathbf{k}]$ rad/s, then the direction of ω_2 will remain constant with respect to the xyz frame, which is along the y axis. Thus,

$$\dot{\omega}_2 = (\dot{\omega}_2)_{xyz} + \omega_1 \times \omega_2 = 1.5\mathbf{j} + (15\mathbf{k} \times 6\mathbf{j}) = [-90\mathbf{i} + 15\mathbf{j}] \text{ rad/s}^2$$

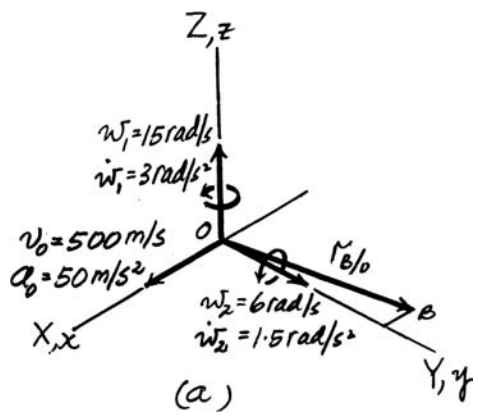

Since ω_1 is always directed along the Z axis when $\Omega = \omega_1$, then

$$\dot{\omega}_1 = (\dot{\omega}_1)_{xyz} + \omega_1 \times \omega_1 = [3\mathbf{k}] \text{ rad/s}^2$$

Thus,

$$\alpha = 3\mathbf{k} + (-90\mathbf{i} + 1.5\mathbf{j})$$

$$= [-90\mathbf{i} + 1.5\mathbf{j} + 3\mathbf{k}] \text{ rad/s}^2$$

When $\theta = 90°$, $\mathbf{r}_{B/O} = [-1\mathbf{i} + 6\mathbf{j}]$ ft. Since the satellite undergoes general motion, then

$$\mathbf{v}_B = \mathbf{v}_O + \omega \times r_{B/O} = (500\mathbf{i}) + (6\mathbf{j} + 15\mathbf{k}) \times (-1\mathbf{i} + 6\mathbf{j})$$

$$= [410\mathbf{i} - 15\mathbf{j} + 6\mathbf{k}] \text{ ft/s} \qquad \textbf{Ans.}$$

and

$$\mathbf{a}_B = \mathbf{a}_O + \alpha \times \mathbf{r}_{B/O} + \omega \times (\omega \times \mathbf{r}_{B/O})$$

$$= 50\mathbf{i} + (-90\mathbf{i} + 1.5\mathbf{j} + 3\mathbf{k}) \times (-1\mathbf{i} + 6\mathbf{j}) + (6\mathbf{j} + 15\mathbf{k}) \times [(6\mathbf{j} + 15\mathbf{k}) \times (-1\mathbf{i} + 6\mathbf{j})]$$

$$= [293\mathbf{i} - 1353\mathbf{j} + 1.5\mathbf{k}] \text{ ft/s}^2 \qquad \textbf{Ans.}$$

© 2010 Pearson Education, Inc., Upper Saddle River, NJ. All rights reserved. This material is protected under all copyright laws as they currently exist. No portion of this material may be reproduced, in any form or by any means, without permission in writing from the publisher.

20–11. The cone rolls in a circle and rotates about the z axis at a constant rate $\omega_z = 8$ rad/s. Determine the angular velocity and angular acceleration of the cone if it rolls without slipping. Also, what are the velocity and acceleration of point A?

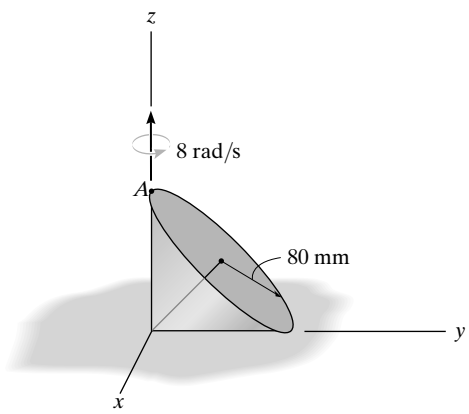

Angular Velocity: The coordinate axes for the fixed frame (X, Y, Z) and rotating frame (x, y, z) at the instant shown are set to be coincident. Thus, the angular velocity of the disk at this instant (with reference to X, Y, Z) can be expressed in terms of **i, j, k** components. Since the disk rolls without slipping, then its angular velocity $\omega = \omega_s + \omega_z$ is always directed along the instantaneuos axis of zero velocity (y axis). Thus,

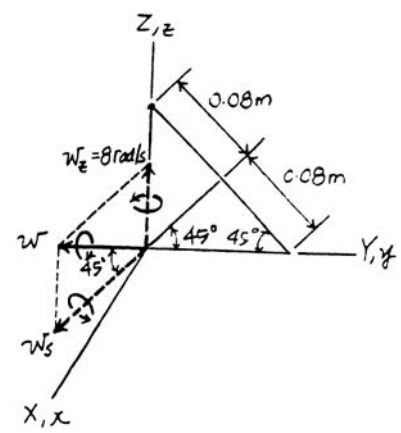

$$\omega = \omega_s + \omega_z$$

$$-\omega\mathbf{j} = -\omega_s \cos 45°\mathbf{j} - \omega_s \sin 45°\mathbf{k} + 8\mathbf{k}$$

Equating **k** and **j** components, we have

$$0 = -\omega_s \sin 45° + 8 \qquad \omega_s = 11.31 \text{ rad/s}$$

$$-\omega = -11.13 \cos 45° \qquad \omega = 8.00 \text{ rad/s}$$

Thus, $\omega = \{-8.00\mathbf{j}\}$ rad/s **Ans.**

Angular Acceleration: The angular acceleration α will be determined by investigating the time rate of change of *angular velocity* with respect to the fixed XYZ frame. Since ω always lies in the fixed X–Y plane, then $\omega = \{-8.00\mathbf{j}\}$ rad/s is observed to have a *constant direction* from the rotating xyz frame if this frame is rotating at $\Omega = \omega_z = \{8\mathbf{k}\}$ rad/s. Applying Eq. 20–6 with $(\dot{\omega})_{xyz} = \mathbf{0}$, we have

$$\alpha = \dot{\omega} = (\dot{\omega})_{xyz} + \omega_z \times \omega = \mathbf{0} + 8\mathbf{k} \times (-8.00\mathbf{j}) = \{64.0\mathbf{i}\} \text{ rad/s}^2 \qquad \textbf{Ans.}$$

Velocity and Acceleration: Applying Eqs. 20–3 and 20–4 with the ω and α obtained above and $\mathbf{r}_A = \{0.16 \cos 45°\mathbf{k}\}$ m $= \{0.1131\mathbf{k}\}$ m, we have

$$\mathbf{v}_A = \omega \times \mathbf{r}_A = (-8.00\mathbf{j}) \times (0.1131\mathbf{k}) = \{-0.905\mathbf{i}\} \text{ m/s} \qquad \textbf{Ans.}$$

$$\mathbf{a}_A = \alpha \times \mathbf{r}_A + \omega \times (\omega \times \mathbf{r}_A)$$

$$= (64.0\mathbf{i}) \times (0.1131\mathbf{k}) + (-8.00\mathbf{j}) \times [(-8.00\mathbf{j}) \times (0.1131\mathbf{k})]$$

$$= \{-7.24\mathbf{j} - 7.24\mathbf{k}\} \text{ m/s}^2 \qquad \textbf{Ans.}$$

© 2010 Pearson Education, Inc., Upper Saddle River, NJ. All rights reserved. This material is protected under all copyright laws as they currently exist. No portion of this material may be reproduced, in any form or by any means, without permission in writing from the publisher.

***20–12.** At the instant shown, the motor rotates about the z axis with an angular velocity of $\omega_1 = 3$ rad/s and angular acceleration of $\dot{\omega}_1 = 1.5$ rad/s^2. Simultaneously, shaft OA rotates with an angular velocity of $\omega_2 = 6$ rad/s and angular acceleration of $\dot{\omega}_2 = 3$ rad/s^2, and collar C slides along rod AB with a velocity and acceleration of 6 m/s and 3 m/s^2. Determine the velocity and acceleration of collar C at this instant.

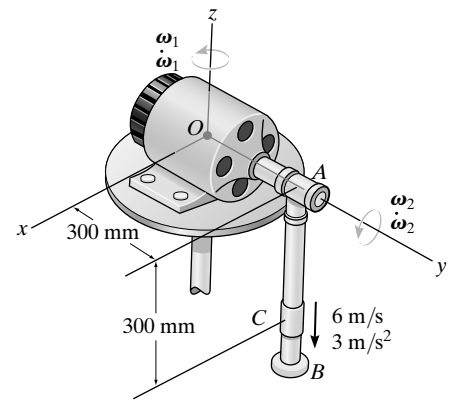

The xyz rotating frame is set parallel to the fixed XYZ frame with its origin attached to point A, Fig. a. Thus, the angular velocity and angular acceleration of this frame with respect to the XYZ frame are

$$\Omega = \omega_1 = [3\mathbf{k}] \text{ rad/s} \qquad \dot{\omega} = [1.5\mathbf{k}] \text{ rad/s}^2$$

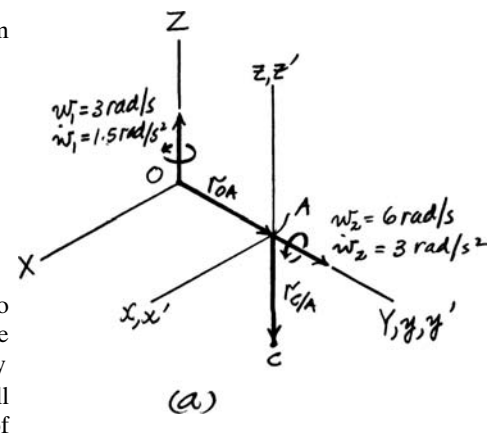

Since point A rotates about a fixed axis (Z axis), its motion can be determined from

$$\mathbf{v}_A = \omega_1 \times \mathbf{r}_{OA} = (3\mathbf{k}) \times (0.3\mathbf{j}) = [-0.9\mathbf{i}] \text{ m/s}$$

$$\begin{aligned}\mathbf{a}_A &= \dot{\omega}_1 \times \mathbf{r}_{OA} + \omega_1 \times (\omega \times \mathbf{r}_{OA}) \\ &= (1.5\mathbf{k}) \times (0.3\mathbf{j}) + (3\mathbf{k}) \times (3\mathbf{k} \times 0.3\mathbf{j}) \\ &= [-0.45\mathbf{i} - 2.7\mathbf{j}] \text{ m/s}^2\end{aligned}$$

In order to determine the motion of point C relative to point A, it is necessary to establish a second $x'y'z'$ rotating frame that coincides with the xyz frame at the instant considered, Fig. a. If we set the $x'y'z'$ frame to have an angular velocity relative to the xyz frame of $\Omega' = \omega_2 = [6\mathbf{j}]$ rad/s, the direction of $\left(\mathbf{r}_{C/A}\right)_{xyz}$ will remain unchanged with respect to the $x'y'z'$ frame. Taking the time derivative of $\left(\mathbf{r}_{C/A}\right)_{xyz}$,

$$\begin{aligned}(\mathbf{v}_{C/A})_{xyz} = (\dot{\mathbf{r}}_{C/A})_{xyz} &= \left[(\dot{\mathbf{r}}_{C/A})_{x'y'z'} + \omega_2 \times (\mathbf{r}_{C/A})_{xyz}\right] \\ &= (-6\mathbf{k}) + 6\mathbf{j} \times (-0.3\mathbf{k}) \\ &= [-1.8\mathbf{i} - 6\mathbf{k}] \text{ m/s}\end{aligned}$$

Since $\Omega' = \omega_2$ has a constant direction with respect to the xyz frame, then $\dot{\Omega}' = \dot{\omega}_2 = [3\mathbf{j}]$ rad/s^2. Taking the time derivative of $(\dot{\mathbf{r}}_{C/A})_{xyz}$,

$$\begin{aligned}(\mathbf{a}_{C/A})_{xyz} = (\ddot{\mathbf{r}}_{C/A})_{xyz} &= \left[(\ddot{\mathbf{r}}_{C/A})_{x'y'z'} + \omega_2 \times (\dot{\mathbf{r}}_{C/A})_{x'y'z'}\right] + \dot{\omega}_2 \times (\mathbf{r}_{C/A})_{xyz} + \omega_2 \times (\dot{\mathbf{r}}_{C/A})_{xyz} \\ &= [(-3\mathbf{k}) + 6\mathbf{j} \times (-6\mathbf{k})] + (3\mathbf{j}) \times (-0.3\mathbf{k}) + 6\mathbf{j} \times (-1.8\mathbf{i} - 6\mathbf{k}) \\ &= [-72.9\mathbf{i} + 7.8\mathbf{k}] \text{ m/s}\end{aligned}$$

Thus,

$$\begin{aligned}\mathbf{v}_C &= \mathbf{v}_A + \Omega \times \mathbf{r}_{C/A} + (\mathbf{v}_{C/A})_{xyz} \\ &= (-0.9\mathbf{i}) + 3\mathbf{k} \times (-0.3\mathbf{k}) + (-1.8\mathbf{i} - 6\mathbf{k}) \\ &= [-2.7\mathbf{i} - 6\mathbf{k}] \text{ m/s} \qquad \textbf{Ans.}\end{aligned}$$

and

$$\begin{aligned}\mathbf{a}_C &= \mathbf{a}_A + \dot{\Omega} \times \mathbf{r}_{C/A} + \Omega \times (\Omega \times \mathbf{r}_{C/A}) + 2\Omega \times (\mathbf{v}_{C/A})_{xyz} + (\mathbf{a}_{C/A})_{xyz} \\ &= (-0.45\mathbf{i} - 2.7\mathbf{j}) + 1.5\mathbf{k} \times (-0.3\mathbf{k}) + (3\mathbf{k}) \times [(3\mathbf{k}) \times (-0.3\mathbf{k})] + 2(3\mathbf{k}) \times (-1.8\mathbf{i} - 6\mathbf{k}) + (-72.9\mathbf{i} + 7.8\mathbf{k}) \\ &= [-73.35\mathbf{i} - 13.5\mathbf{j} + 7.8\mathbf{k}] \text{ m/s} \qquad \textbf{Ans.}\end{aligned}$$

© 2010 Pearson Education, Inc., Upper Saddle River, NJ. All rights reserved. This material is protected under all copyright laws as they currently exist. No portion of this material may be reproduced, in any form or by any means, without permission in writing from the publisher.

•20–13. At the instant shown, the tower crane rotates about the z axis with an angular velocity $\omega_1 = 0.25$ rad/s, which is increasing at 0.6 rad/s^2. The boom OA rotates downward with an angular velocity $\omega_2 = 0.4$ rad/s, which is increasing at 0.8 rad/s^2. Determine the velocity and acceleration of point A located at the end of the boom at this instant.

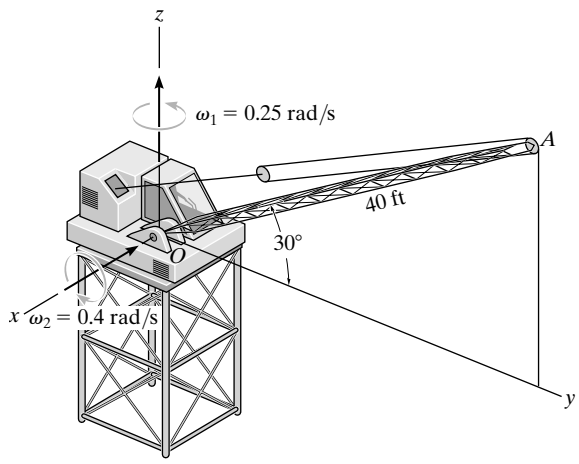

$\omega = \omega_1 \cdot \omega_2 = \{-0.4\,\mathbf{i} + 0.25\mathbf{k}\}$ rad/s

$\Omega = \{0.25\,\mathbf{k}\}$ rad/s

$\omega = \omega_{1\cdot 2} + \Omega \times \omega = (-0.8\,\mathbf{i} + 0.6\mathbf{k}) + (0.25\mathbf{k}) \times (-0.4\,\mathbf{i} + 0.25\mathbf{k})$

$= \{-0.8\mathbf{i} - 0.1\mathbf{j} + 0.6\mathbf{k}\}$ rad/s^2

$\mathbf{r}_A = 40\cos 30°\mathbf{j} + 40\sin 30°\mathbf{k} = \{34.64\mathbf{j} + 20\mathbf{k}\}$ ft

$\mathbf{v}_A = \omega \times \mathbf{r}_A = 1 - 0.4\,\mathbf{i} + 0.25\,\mathbf{k}) \times (34.64\mathbf{j} + 20\mathbf{k})$

$\mathbf{v}_A = \{-8.66\mathbf{i} + 8.00\mathbf{j} - 13.9\mathbf{k}\}$ft/s **Ans.**

$\mathbf{a}_A = \alpha \cdot \mathbf{r}_A + \omega \times \mathbf{v}_A = (-0.8\mathbf{i} - 0.1\mathbf{j} + 0.6\mathbf{k}) \times (34.64\mathbf{j} + 20\mathbf{k}) + (-0.4\mathbf{i} + 0.25\mathbf{k}) \times (-8.66\mathbf{i} + 8.00\mathbf{j} - 13.9\mathbf{k})$

$\mathbf{a}_A = \{-24.8\mathbf{i} + 8.29\mathbf{j} - 30.9\mathbf{k}\}$ft/s^2 **Ans.**

© 2010 Pearson Education, Inc., Upper Saddle River, NJ. All rights reserved. This material is protected under all copyright laws as they currently exist. No portion of this material may be reproduced, in any form or by any means, without permission in writing from the publisher.

20–14. Gear C is driven by shaft DE, while gear B spins freely about its axle GF, which precesses freely about shaft DE. If gear A is held fixed ($\omega_A = 0$), and shaft DE rotates with a constant angular velocity of $\omega_{DE} = 10$ rad/s, determine the angular velocity of gear B.

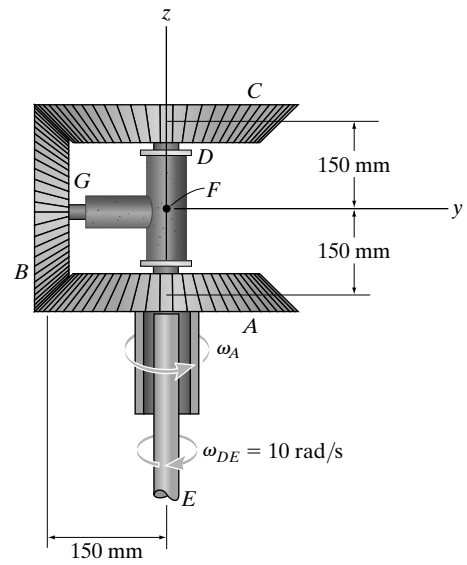

Since gear C rotates about the fixed axis ($z$axis), the velocity of the contact point P between gears B and C is

$$\mathbf{v}_P = \omega_{DE} \times \mathbf{r}_C = (10\mathbf{k}) \times (-0.15\mathbf{j}) = [1.5\mathbf{i}] \text{ m/s}$$

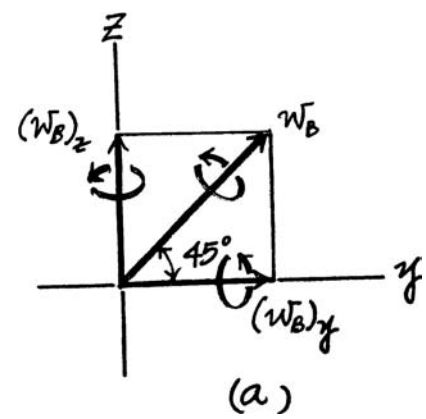

Here, gear B spins about its axle with an angular velocity of $(\omega_B)_y$ and precesses about shaft DE with an angular velocity of $(\omega_B)_z$. Thus, the angular velocity of gear B is

$$\omega_B = (\omega_B)_y \mathbf{j} + (\omega_B)_z \mathbf{k}$$

Here, $\mathbf{r}_{FP} = [-0.15\mathbf{j} + 0.15\mathbf{k}]$ m. Thus,

$$\mathbf{v}_P = \omega_B \times \mathbf{r}_{FP}$$

$$1.5\mathbf{i} = \left[(\omega_B)_y \mathbf{j} + (\omega_B)_z \mathbf{k}\right] \times (-0.15\mathbf{j} + 0.15\mathbf{k})$$

$$1.5\mathbf{i} = \left[0.15(\omega_B)_y - (-0.15)(\omega_B)_z\right]\mathbf{i}$$

$$1.5 = 0.15(\omega_B)_y + 0.15(\omega_B)_z$$

$$(\omega_B)_y + (\omega_B)_z = 10 \qquad \textbf{(1)}$$

Since gear A is held fixed, ω_B will be directed along the instantaneous axis of zero velocity, which is along the line where gears A and B mesh. From the geometry of Fig. a,

$$\frac{(\omega_B)_z}{(\omega_B)_y} = \tan 45° \qquad (\omega_B)_z = (\omega_B)_y \qquad \textbf{(2)}$$

Solving Eqs. (1) and (2),

$$(\omega_B)_y = (\omega_B)_z = 5 \text{ rad/s}$$

Thus,

$$\omega_B = [5\mathbf{j} + 5\mathbf{k}] \text{ rad/s} \qquad \textbf{Ans.}$$

© 2010 Pearson Education, Inc., Upper Saddle River, NJ. All rights reserved. This material is protected under all copyright laws as they currently exist. No portion of this material may be reproduced, in any form or by any means, without permission in writing from the publisher.

20–15. Gear C is driven by shaft DE, while gear B spins freely about its axle GF, which precesses freely about shaft DE. If gear A is driven with a constant angular velocity of $\omega_A = 5$ rad/s and shaft DE rotates with a constant angular velocity of $\omega_{DE} = 10$ rad/s, determine the angular velocity of gear B.

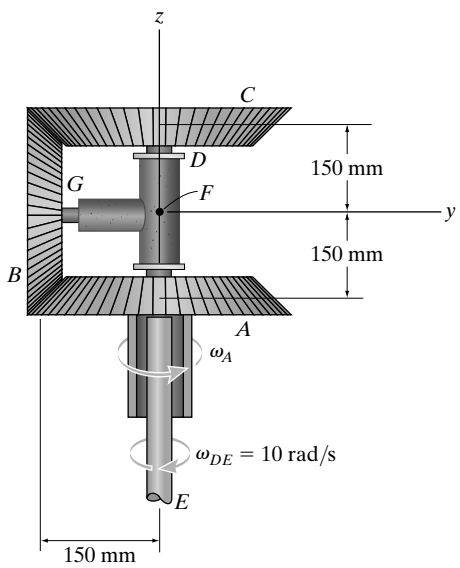

Since gears A and C rotate about the fixed axis (z axis), the velocity of the contact point P between gears B and C and point P' between gears A and B are

$$\mathbf{v}_P = \omega_{DE} \times \mathbf{r}_C = (10\mathbf{k}) \times (-0.15\mathbf{j}) = [1.5\mathbf{i}] \text{ m/s}$$

and

$$\mathbf{v}_{P'} = \omega_A \times \mathbf{r}_A = (-5\mathbf{k}) \times (-0.15\mathbf{j}) = [-0.75\mathbf{i}] \text{ m/s}$$

Gear B spins about its axle with an angular velocity of $(\omega_B)_y$ and precesses about shaft DE with an angular velocity of $(\omega_B)_z$. Thus, the angular velocity of gear B is

$$\omega_B = (\omega_B)_y\mathbf{j} + (\omega_B)_z\mathbf{k}$$

Here, $r_{FP} = [-0.15\mathbf{j} + 0.15\mathbf{k}]$ m and $r_{FP'} = [-0.15\mathbf{j} - 0.15\mathbf{k}]$. Thus,

$$\mathbf{v}_P = \omega_B \times \mathbf{r}_{FP}$$

$$1.5\mathbf{i} = \left[(\omega_B)_y\mathbf{j} + (\omega_B)_z\mathbf{k}\right] \times (-0.15\mathbf{j} + 0.15\mathbf{k})$$

$$1.5\mathbf{i} = \left[0.15(\omega_B)_y + 0.15(\omega_B)_z\right]\mathbf{i}$$

so that

$$1.5 = 0.15(\omega_B)_y + 0.15(\omega_B)_z$$

$$(\omega_B)_y + (\omega_B)_z = 10 \qquad \textbf{(1)}$$

and

$$\mathbf{v}_{P'} = \omega_B \times \mathbf{r}_{FP'}$$

$$-0.75\mathbf{i} = \left[(\omega_B)_y\mathbf{j} + (\omega_B)_z\mathbf{k}\right] \times (-0.15\mathbf{j} - 0.15\mathbf{k})$$

$$-0.75\mathbf{i} = \left[0.15(\omega_B)_z - 0.15(\omega_B)_y\right]\mathbf{i}$$

Thus,

$$-0.75 = 0.15(\omega_B)_z - 0.15(\omega_B)_y$$

$$(\omega_B)_y - (\omega_B)_z = 5 \qquad \textbf{(2)}$$

Solving Eqs. (1) and (2), we obtain

$$(\omega_B)_y = 7.5 \text{ rad/s}$$

$$(\omega_B)_z = 2.5 \text{ rad/s}$$

Thus,

$$\omega_B = [7.5\mathbf{j} + 2.5\mathbf{k}] \text{ rad/s} \qquad \textbf{Ans.}$$

© 2010 Pearson Education, Inc., Upper Saddle River, NJ. All rights reserved. This material is protected under all copyright laws as they currently exist. No portion of this material may be reproduced, in any form or by any means, without permission in writing from the publisher.

***20–16.** At the instant $\theta = 0°$, the satellite's body is rotating with an angular velocity of $\omega_1 = 20$ rad/s, and it has an angular acceleration of $\dot{\omega}_1 = 5$ rad/s^2. Simultaneously, the solar panels rotate with an angular velocity of $\omega_2 = 5$ rad/s and angular acceleration of $\dot{\omega}_2 = 3$ rad/s^2. Determine the velocity and acceleration of point B located at the end of one of the solar panels at this instant.

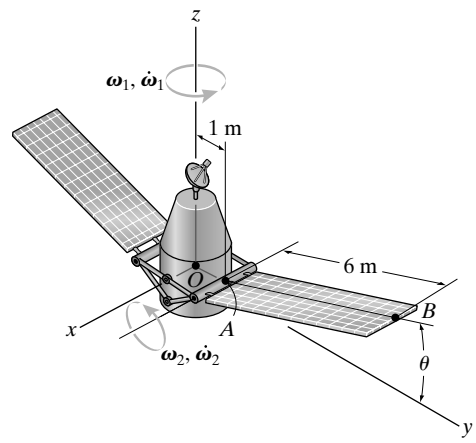

The xyz rotating frame is set parallel to the fixed XYZ frame with its origin attached to point A, Fig. a. Thus, the angular velocity and angular acceleration of this frame with respect to the XYZ frame are

$$\Omega = \omega_1 = [20\mathbf{k}] \text{ rad/s} \qquad \dot{\omega} = \dot{\omega}_1 = [5\mathbf{k}] \text{ rad/s}^2$$

Since point A rotates about a fixed axis (Z axis), its motion can be determined from

$$\mathbf{v}_A = \omega_1 \times \mathbf{r}_{OA} = (20\mathbf{k}) \times (1\mathbf{j}) = [-20\mathbf{i}] \text{ m/s}$$

and

$$\begin{aligned}\mathbf{a}_A &= \dot{\omega}_1 \times \mathbf{r}_{OA} + \omega_1 \times (\omega_1 \times \mathbf{r}_{OA}) \\ &= (5\mathbf{k}) \times (1\mathbf{j}) + (20\mathbf{i}) \times \left[(20\mathbf{i}) \times (1\mathbf{j})\right] \\ &= [-5\mathbf{i} - 400\mathbf{j}] \text{ m/s}^2\end{aligned}$$

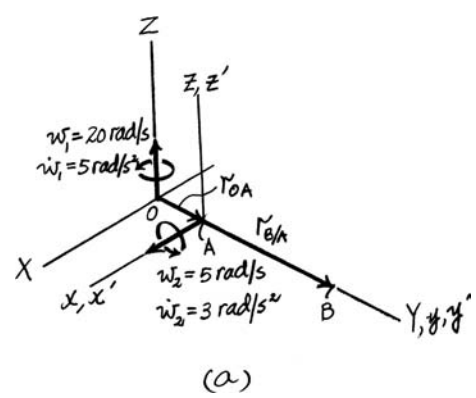

(a)

In order to determine the motion of point B relative to point A, it is necessary to establish a second $x'y'z'$ rotating frame that coincides with the xyz frame at the instant considered, Fig. a. If we set the $x'y'z'$ frame to have an angular velocity relative to the xyz frame of $\Omega' = \omega_2 = [5\mathbf{i}]$ rad/s, the direction of $(\mathbf{r}_{B/A})_{xyz}$ will remain unchanged with respect to the $x'y'z'$ frame. Taking the time derivative of $(\mathbf{r}_{B/A})_{xyz}$,

$$\begin{aligned}(\mathbf{v}_{B/A})_{xyz} &= (\dot{\mathbf{r}}_{B/A})_{xyz} = \left[(\dot{\mathbf{r}}_{B/A})_{x'y'z'} + \omega_2 \times (\mathbf{r}_{B/A})_{xyz}\right] \\ &= 0 + (5\mathbf{i}) \times (6\mathbf{j}) \\ &= [30\mathbf{k}] \text{ m/s}\end{aligned}$$

Since $\Omega' = \omega_2$ has a constant direction with respect to the xyz frame, then $\dot{\Omega}' = \dot{\omega}_2 = [3\mathbf{i}]$ rad/s^2. Taking the time derivative of $(\dot{\mathbf{r}}_{B/A})_{xyz}$,

$$\begin{aligned}(\mathbf{a}_{B/A})_{xyz} &= (\ddot{\mathbf{r}}_{B/A})_{xyz} = \left[(\ddot{\mathbf{r}}_{B/A})_{x'y'z'} + \omega_2 \times (\dot{\mathbf{r}}_{B/A})_{x'y'z'}\right] + \dot{\omega}_2 \times (\mathbf{r}_{B/A})_{xyz} + \omega_2 \times (\dot{\mathbf{r}}_{B/A})_{xyz} \\ &= [\mathbf{0} + \mathbf{0}] + (3\mathbf{i}) \times (6\mathbf{j}) + (5\mathbf{i}) \times (30\mathbf{k}) \\ &= [-150\mathbf{j} + 18\mathbf{k}] \text{ m/s}^2\end{aligned}$$

Thus,

$$\begin{aligned}\mathbf{v}_B &= \mathbf{v}_A + \Omega \times \mathbf{r}_{B/A} + (\mathbf{v}_{B/A})_{xyz} \\ &= (-20\mathbf{i}) + (20\mathbf{k}) \times (6\mathbf{j}) + (30\mathbf{k}) \\ &= [-140\mathbf{i} + 30\mathbf{k}] \text{ m/s} \qquad \textbf{Ans.}\end{aligned}$$

and

$$\begin{aligned}\mathbf{a}_B &= \mathbf{a}_A + \dot{\Omega} \times \mathbf{r}_{B/A} + \Omega \times (\Omega \times r_{B/A}) + 2\Omega \times (\mathbf{v}_{B/A})_{xyz} + (\mathbf{a}_{B/A})_{xyz} \\ &= (-5\mathbf{i} - 400\mathbf{j}) + (5\mathbf{k}) \times (6\mathbf{j}) + (20\mathbf{k}) \times \left[(20\mathbf{k}) \times (6\mathbf{j})\right] + 2(20\mathbf{k}) \times 30\mathbf{k} + (-150\mathbf{j} + 18\mathbf{k}) \\ &= [-35\mathbf{i} - 2950\mathbf{j} + 18\mathbf{k}] \text{ m/s}^2 \qquad \textbf{Ans.}\end{aligned}$$

© 2010 Pearson Education, Inc., Upper Saddle River, NJ. All rights reserved. This material is protected under all copyright laws as they currently exist. No portion of this material may be reproduced, in any form or by any means, without permission in writing from the publisher.

•20–17. At the instant $\theta = 30°$, the satellite's body is rotating with an angular velocity of $\omega_1 = 20$ rad/s, and it has an angular acceleration of $\dot{\omega}_1 = 5$ rad/s^2. Simultaneously, the solar panels rotate with a constant angular velocity of $\omega_2 = 5$ rad/s. Determine the velocity and acceleration of point B located at the end of one of the solar panels at this instant.

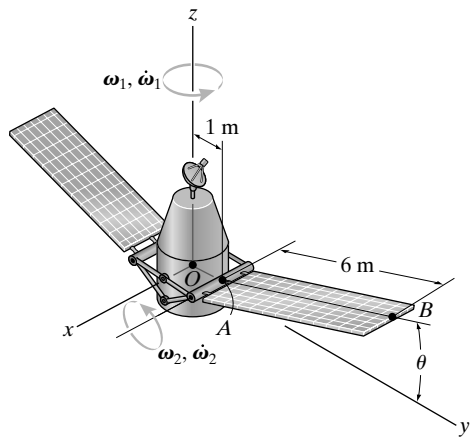

The xyz rotating frame is set parallel to the fixed XYZ frame with its origin attached to point A, Fig. a. Thus, the angular velocity and angular acceleration of this frame with respect to the XYZ frame are

$$\Omega = \omega_1 = [20\mathbf{k}] \text{ rad/s} \qquad \dot{\omega} = \dot{\omega}_1 = [5\mathbf{k}] \text{ rad/s}^2$$

Since point A rotates about a fixed axis (Z axis), its motion can be determined from

$$\mathbf{v}_A = \omega_1 \times \mathbf{r}_{OA} = (20\mathbf{k}) \times (1\mathbf{j}) = [-20\mathbf{i}] \text{ m/s}$$

and

$$\begin{aligned} a_A &= \dot{\omega}_1 \times \mathbf{r}_{OA} + \omega_1 \times (\omega_1 \times \mathbf{r}_{OA}) \\ &= (5\mathbf{k}) \times (1\mathbf{j}) + (20\mathbf{k}) \times [(20\mathbf{k}) \times (1\mathbf{j})] \\ &= [-5\mathbf{i} - 400\mathbf{j}] \text{ m/s}^2 \end{aligned}$$

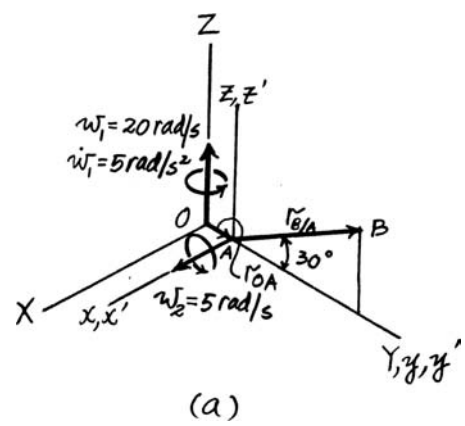

(a)

In order to determined the motion of point B relative to point A, it is necessary to establish a second $x'y'z'$ rotating frame that coincides with the xyz frame at the instant considered, Fig. a. If we set the $x'y'z'$ frame to have an angular velocity relative to the xyz frame of $\Omega' = \omega_2 = [5\mathbf{k}]$ rad/s, the direction of $(\mathbf{r}_{B/A})_{xyz}$ will remain unchanged with respect to the $x'y'z'$ frame. Taking the time derivative of $(\mathbf{r}_{B/A})_{xyz}$,

$$\begin{aligned} (\mathbf{v}_{B/A})_{xyz} = (\dot{\mathbf{r}}_{B/A})_{xyz} &= \left[(\dot{\mathbf{r}}_{B/A})_{x'y'z'} + \omega_2 \times (\mathbf{r}_{B/A})_{xyz}\right] \\ &= \mathbf{0} + (5\mathbf{i}) \times (6\cos 30°\,\mathbf{j} + 6\sin 30°\,\mathbf{k}) \\ &= [-15\mathbf{j} + 25.98\mathbf{k}] \text{ m/s} \end{aligned}$$

Since $\Omega' = \omega_2$ has a constant direction with respect to the xyz frame, then $\dot{\Omega}' = \dot{\omega}_2 = \mathbf{0}$. Taking the time derivative of $(\dot{\mathbf{r}}_{B/A})_{xyz}$,

$$\begin{aligned} (\mathbf{a}_{B/A})_{xyz} = \left(\ddot{\mathbf{r}}_{B/A}\right)_{xyz} &= \left[\left(\ddot{\mathbf{r}}_{B/A}\right)_{x'y'z'} + \omega_2 \times (\dot{\mathbf{r}}_{B/A})_{x'y'z'}\right] + \dot{\omega}_2 \times (\mathbf{r}_{B/A})_{xyz} + \omega_2 \times (\dot{\mathbf{r}}_{B/A})_{xyz} \\ &= [\mathbf{0} + \mathbf{0}] + \mathbf{0} + (5\mathbf{i}) \times (-15\mathbf{j} + 25.98\mathbf{k}) \\ &= [-129.90\mathbf{j} - 75\mathbf{k}] \text{ m/s}^2 \end{aligned}$$

Thus,

$$\begin{aligned} \mathbf{v}_B &= \mathbf{v}_A + \Omega \times \mathbf{r}_{B/A} + (\mathbf{v}_{B/A})_{xyz} \\ &= (-20\mathbf{i}) + (20\mathbf{k}) \times (6\cos 30°\,\mathbf{j} + 6\sin 30°\mathbf{k}) + (-15\mathbf{j} + 25.98\mathbf{k}) \\ &= [-124\mathbf{i} - 15\mathbf{j} + 26.0\mathbf{k}] \text{ m/s} \qquad \textbf{Ans.} \end{aligned}$$

and

$$\begin{aligned} \mathbf{a}_B &= \mathbf{a}_A + \dot{\Omega} \times \mathbf{r}_{B/A} + \Omega \times (\Omega \times \mathbf{r}_{B/A}) + 2\Omega \times (\mathbf{v}_{B/A})_{xyz} + (\mathbf{a}_{B/A})_{xyz} \\ &= (-5\mathbf{i} - 400\mathbf{j}) + (5\mathbf{k}) \times (6\cos 30°\mathbf{j} + 6\sin 30°\,\mathbf{k}) + (20\mathbf{k}) \times \left[(20\mathbf{k}) \times (6\cos 30°\,\mathbf{j} + 6\sin 30°\mathbf{k})\right] \\ &\quad + 2(20\mathbf{k}) \times (-15\mathbf{j} + 25.98\mathbf{k}) + (-129.90\mathbf{j} - 75\mathbf{k}) \\ &= [569\mathbf{i} - 2608\mathbf{j} - 75\mathbf{k}] \text{m/s}^2 \qquad \textbf{Ans.} \end{aligned}$$

© 2010 Pearson Education, Inc., Upper Saddle River, NJ. All rights reserved. This material is protected under all copyright laws as they currently exist. No portion of this material may be reproduced, in any form or by any means, without permission in writing from the publisher.

20–18. At the instant $\theta = 30°$, the satellite's body is rotating with an angular velocity of $\omega_1 = 20$ rad/s, and it has an angular acceleration of $\dot{\omega}_1 = 5$ rad/s^2. At the same instant, the satellite travels in the x direction with a velocity of $\mathbf{v}_O = \{5000\mathbf{i}\}$ m/s, and it has an acceleration of $\mathbf{a}_O = \{500\mathbf{i}\}$ m/s^2. Simultaneously, the solar panels rotate with a constant angular speed of $\omega_2 = 5$ rad/s. Determine the velocity and acceleration of point B located at the end of one of the solar panels at this instant.

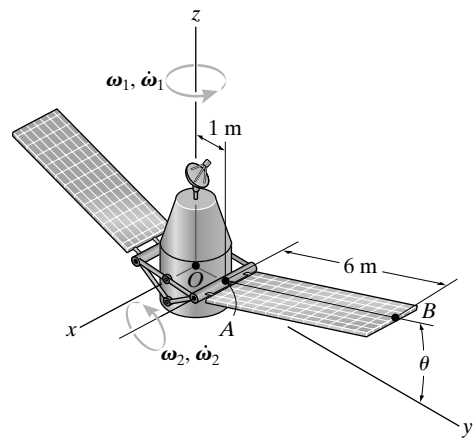

The xyz rotating frame is set parallel to the fixed XYZ frame with its origin attached to point A, Fig. a. Thus, the angular velocity and angular acceleration of this frame with respect to the XYZ frame are

$$\Omega = \omega_1 = [20\mathbf{k}] \text{ rad/s} \qquad \dot{\omega} = \dot{\omega}_1 = [5\mathbf{k}] \text{ rad/s}^2$$

Since the body of the satellite undergoes general motion, the motion of points O and A can be related using

$$\mathbf{v}_A = \mathbf{v}_O + \omega_1 \times \mathbf{r}_{A/O} = 5000\mathbf{i} + (20\mathbf{k}) \times (1\mathbf{j}) = [4980\mathbf{i}] \text{ m/s}$$

and

$$\begin{aligned}\mathbf{a}_A &= \mathbf{a}_O + \dot{\omega}_1 \times \mathbf{r}_{A/O} + \omega_1 \times (\omega_1 \times \mathbf{r}_{O/A}) \\ &= (500\mathbf{i}) + (5\mathbf{k}) \times (1\mathbf{j}) + (20\mathbf{k}) \times [(20\mathbf{k}) \times (1\mathbf{j})] \\ &= [495\mathbf{i} - 400\mathbf{j}] \text{ m/s}^2\end{aligned}$$

In order to determine the motion of point B relative to point A, it is necessary to establish a second $x'y'z'$ rotating frame that coincides with the xyz frame at the instant considered, Fig. a. If we set the $x'y'z'$ frame to have an angular velocity of $\Omega' = \omega_2 = [5\mathbf{i}]$ rad/s, the direction of $(\mathbf{r}_{B/A})_{xyz}$ will remain unchanged with respect to the $x'y'z'$ frame. Taking the time derivative of $(\mathbf{r}_{B/A})_{xyz}$,

$$\begin{aligned}(\mathbf{v}_{B/A})_{xyz} &= (\dot{\mathbf{r}}_{B/A})_{xyz} = \left[(\dot{\mathbf{r}}_{B/A})_{x'y'z'} + \omega_2 \times (\mathbf{r}_{B/A})_{xyz}\right] \\ &= \mathbf{0} + (5\mathbf{i}) \times (6\cos 30°\,\mathbf{j} + 6\sin 30°\,\mathbf{k}) \\ &= [-15\mathbf{j} + 25.98\mathbf{k}] \text{ m/s}\end{aligned}$$

Since $\Omega' = \omega_2$ has a constant direction with respect to the xyz frame, then $\dot{\Omega} = \dot{\omega}_2 = \mathbf{0}$. Taking the time derivative of $(\dot{\mathbf{r}}_{B/A})_{xyz}$,

© 2010 Pearson Education, Inc., Upper Saddle River, NJ. All rights reserved. This material is protected under all copyright laws as they currently exist. No portion of this material may be reproduced, in any form or by any means, without permission in writing from the publisher.

20–18. Continued

$$(\mathbf{a}_{B/A})_{xyz} = \left(\ddot{\mathbf{r}}_{B/A}\right)_{xyz} = \left[\left(\ddot{\mathbf{r}}_{B/A}\right)_{x'y'z'} + \omega_2 \times (\dot{\mathbf{r}}_{B/A})_{x'y'z'}\right] + \dot{\omega}_2 \times (\mathbf{r}_{B/A})_{xyz} + \omega_2 \times (\dot{\mathbf{r}}_{B/A})_{xyz}$$

$$= [0 + 0] + 0 + (5\mathbf{i}) \times (-15\mathbf{j} + 25.98\mathbf{k})$$

$$= [-129.90\mathbf{j} - 75\mathbf{k}]\ \text{m/s}^2$$

Thus,

$$\mathbf{v}_B = \mathbf{v}_A + \Omega \times \mathbf{r}_{B/A} + (\mathbf{v}_{B/A})_{xyz}$$

$$= (4980\mathbf{i}) + (20\mathbf{k}) \times (6\cos 30°\,\mathbf{j} + 6\sin 30°\mathbf{k}) + (-15\mathbf{j} + 25.98\mathbf{k})$$

$$= [4876\mathbf{i} - 15\mathbf{j} + 26.0\mathbf{k}]\text{m/s} \qquad \textbf{Ans.}$$

and

$$\mathbf{a}_B = \mathbf{a}_A + \dot{\Omega} \times \mathbf{r}_{B/A} + \Omega \times (\Omega \times \mathbf{r}_{B/A}) + 2\Omega \times (\mathbf{v}_{B/A})_{xyz} + (\mathbf{a}_{B/A})_{xyz}$$

$$= (495\mathbf{i} - 400\mathbf{j}) + (5\mathbf{k})\times(6\cos 30°\mathbf{j} + 6\sin 30°\,\mathbf{k}) + (20\mathbf{k})\times\left[(20\mathbf{k})\times(6\cos 30°\,\mathbf{j} + 6\sin 30°\mathbf{k})\right]$$

$$+ 2(20\mathbf{k})\times(-15\mathbf{j} + 25.98\mathbf{k}) + (-129.90\mathbf{j} - 75\mathbf{k})$$

$$= [1069\mathbf{i} - 2608\mathbf{j} - 75\mathbf{k}]\ \text{m/s}^2 \qquad \textbf{Ans.}$$

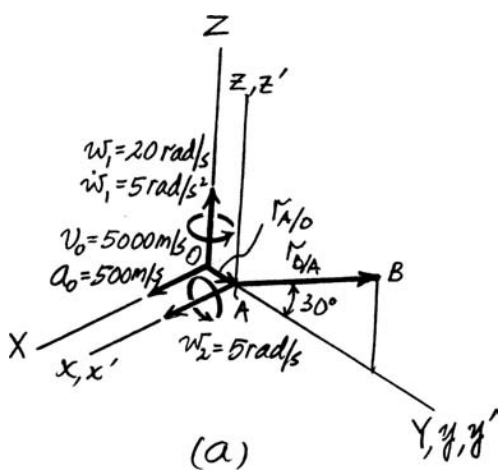

(a)

© 2010 Pearson Education, Inc., Upper Saddle River, NJ. All rights reserved. This material is protected under all copyright laws as they currently exist. No portion of this material may be reproduced, in any form or by any means, without permission in writing from the publisher.

20–19. The crane boom OA rotates about the z axis with a constant angular velocity of $\omega_1 = 0.15$ rad/s, while it is rotating downward with a constant angular velocity of $\omega_2 = 0.2$ rad/s. Determine the velocity and acceleration of point A located at the end of the boom at the instant shown.

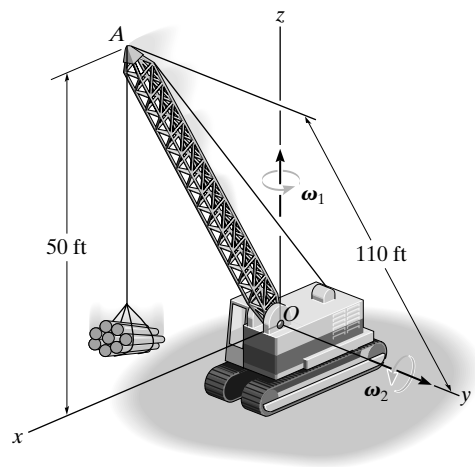

$\dot{\omega} = \omega_1 + \omega_2 = \{0.2\mathbf{j} + 0.15\mathbf{k}\}$ rad/s

$\omega = \omega_1 - \omega_2$

Let the x, y, z axes rotate at $\Omega = \omega_1$, then

$\omega = \omega = |\omega| + \omega_1 \times \omega_2$

$\omega = \mathbf{0} + 0.15\mathbf{k} \times \mathbf{0.2j} = \{-0.03\mathbf{i}\}$ rad/s^2

$\mathbf{r}_A = \left[\sqrt{(110)^2 - (50)^2}\right]\mathbf{i} + 50\mathbf{k} = \{97.98\mathbf{i} + 50\mathbf{k}\}$ ft

$$\mathbf{v}_A = \omega_A \mathbf{r}_A = \begin{vmatrix} \mathbf{i} & \mathbf{j} & \mathbf{k} \\ 0 & 0.2 & 0.15 \\ 97.98 & 0 & 50 \end{vmatrix}$$

$\mathbf{v}_A = \{10\mathbf{i} + 117\mathbf{j} - 19.6\mathbf{k}\}$ ft/s **Ans.**

$$\mathbf{a}_A = \alpha + \mathbf{r}_A + \omega + \mathbf{v}_A = \begin{vmatrix} \mathbf{i} & \mathbf{j} & \mathbf{k} \\ -0.03 & 0 & 0 \\ 97.98 & 0 & 50 \end{vmatrix} + \begin{vmatrix} \mathbf{i} & \mathbf{j} & \mathbf{k} \\ 0 & 0.2 & 0.15 \\ 10 & 14.7 & -19.6 \end{vmatrix}$$

$\mathbf{a}_A = \{-6.12\mathbf{i} + 3\mathbf{j} - 2\mathbf{k}\}$ ft/s^2 **Ans.**

© 2010 Pearson Education, Inc., Upper Saddle River, NJ. All rights reserved. This material is protected under all copyright laws as they currently exist. No portion of this material may be reproduced, in any form or by any means, without permission in writing from the publisher.

***20–20.** If the frame rotates with a constant angular velocity of $\omega_p = \{-10\mathbf{k}\}$ rad/s and the horizontal gear B rotates with a constant angular velocity of $\omega_B = \{5\mathbf{k}\}$ rad/s, determine the angular velocity and angular acceleration of the bevel gear A.

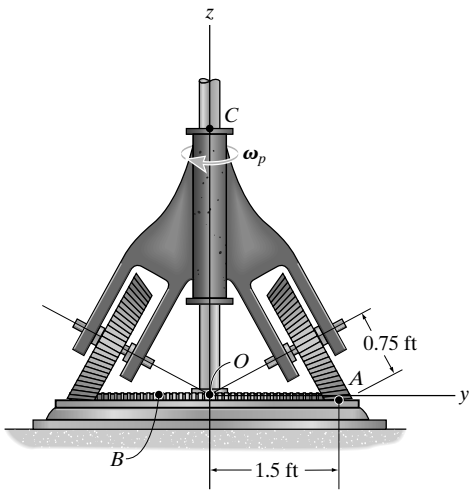

If the bevel gear A spins about its axle with an angular velocity of ω_S, then its angular velocity is

$$\omega = \omega_s + \omega_p$$

$$= (\omega_s \cos 30^\circ\,\mathbf{j} + \omega_s \sin 30^\circ\,\mathbf{k}) - 10\,\mathbf{k}$$

$$= 0.8660\omega_s\mathbf{j} + (0.5\omega_s - 10)\mathbf{k}$$

Since gear B rotates about the fixed axis ($z$axis), the velocity of the contact point P between gears A and B is

$$\mathbf{v}_p = \omega_B \times \mathbf{r}_B = (5\mathbf{k}) \times (1.5\mathbf{j}) = [-7.5\mathbf{i}]\text{ft/s}$$

Since gear A rotates about a fixed point O then $r_{OP} = [1.5\mathbf{j}]$ ft. Also,

$$\mathbf{v}_p = \omega \times \mathbf{r}_{OP}$$

$$-7.5\mathbf{i} = [0.8660\omega_s\mathbf{j} + (0.5\omega_s - 10)\mathbf{k}] \times (1.5\mathbf{j})$$

$$-7.5\mathbf{i} = -1.5(0.5\omega_s - 10)\mathbf{i}$$

$$-7.5 = -1.5(0.5\omega_s - 10)$$

$$\omega_s = 30\text{ rad/s}$$

Thus,

$$\omega_s = 30\cos 30^\circ\,\mathbf{j} + 30\sin 30^\circ\mathbf{k} = [25.98\mathbf{j} + 15\mathbf{k}]\text{ rad/s}$$

$$\omega = 0.8660(30)\mathbf{j} + [0.5(30) - 10]\mathbf{k} = [26.0\mathbf{j} + 5\mathbf{k}]\text{ rad/s} \qquad \textbf{Ans.}$$

We will set the XYZ fixed reference frame to coincide with the xyz rotating reference frame at the instant considered. If the xyz frame rotates with an angular velocity of $\Omega = \omega_p = [-10\mathbf{k}]$ rad/s, the direction of ω_s will remain constant with respect to the xyz frame. Thus,

$$\dot{\omega}_s = (\dot{\omega}_S)_{xyz} + \omega_p \times \omega_s$$

$$= \mathbf{0} + (-10\mathbf{k}) \times (25.98\mathbf{j} + 15\mathbf{k})$$

$$= [259.81\mathbf{i}]\text{ rad/s}^2$$

If $\Omega = \omega_p$, then ω_p is always directed along the z axis. Thus,

$$\dot{\omega}_p = \left(\dot{\omega}_p\right)_{xyz} + \omega_p \times \omega_p = \mathbf{0} + \mathbf{0} = 0$$

Thus,

$$\alpha = \dot{\omega} = \dot{\omega}_s + \dot{\omega}_p = (259.81\mathbf{i}) + \mathbf{0} = [260\mathbf{i}]\text{ rad/s}^2 \qquad \textbf{Ans.}$$

© 2010 Pearson Education, Inc., Upper Saddle River, NJ. All rights reserved. This material is protected under all copyright laws as they currently exist. No portion of this material may be reproduced, in any form or by any means, without permission in writing from the publisher.

•20–21. Rod AB is attached to collars at its ends by ball-and-socket joints. If the collar A has a velocity of $v_A = 3$ ft/s, determine the angular velocity of the rod and the velocity of collar B at the instant shown. Assume the angular velocity of the rod is directed perpendicular to the rod.

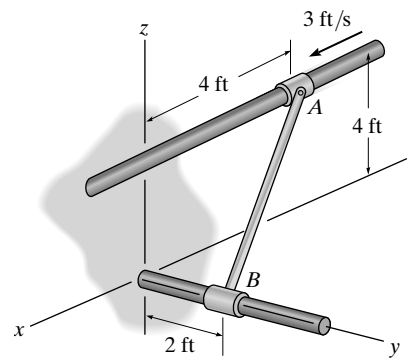

Velocity Equation: Here, $\mathbf{r}_{B/A} = \{[0 - (-4)]\,\mathbf{i} + (2 - 0)\,\mathbf{j} + (0 - 4)\mathbf{k}\}$ ft $= \{4\mathbf{i} + 2\mathbf{j} - 4\mathbf{k}\}$ ft, $\mathbf{v}_A = \{3\mathbf{i}\}$ ft/s, $\mathbf{v}_B = v_B\,\mathbf{j}$ and $\omega = \omega_x\,\mathbf{i} + \omega_y\,\mathbf{j} + \omega_z\,\mathbf{k}$. Applying Eq. 20–7, we have

$$\mathbf{v}_B = \mathbf{v}_A + \omega \times \mathbf{r}_{B/A}$$

$$v_B\,\mathbf{j} = 3\mathbf{i} + \left(\omega_x\,\mathbf{i} + \omega_y\,\mathbf{j} + \omega_z\mathbf{k}\right) \times (4\mathbf{i} + 2\mathbf{j} - 4\mathbf{k})$$

$$v_B\,\mathbf{j} = \left(3 - 4\omega_y - 2\omega_z\right)\mathbf{i} + (4\omega_x + 4\omega_z)\,\mathbf{j} + \left(2\omega_x - 4\omega_y\right)\mathbf{k}$$

Equating $\mathbf{i}$, $\mathbf{j}$ and $\mathbf{k}$ components, we have

$$3 - 4\omega_y - 2\omega_z = 0 \qquad \textbf{[1]}$$

$$v_B = 4\omega_x + 4\omega_z \qquad \textbf{[2]}$$

$$2\omega_x - 4\omega_y = 0 \qquad \textbf{[3]}$$

If ω is specified acting *perpendicular* to the axis of the rod AB. then

$$\omega \cdot \mathbf{r}_{B/A} = 0$$

$$\left(\omega_x\,\mathbf{i} + \omega_y\,\mathbf{j} + \omega_z\,\mathbf{k}\right) \cdot (4\mathbf{i} + 2\mathbf{j} - 4\mathbf{k}) = 0$$

$$4\omega_x + 2\omega_y - 4\omega_z = 0 \qquad \textbf{[4]}$$

Solving Eqs. [1], [2], [3] and [4] yields

$$v_B = 6.00 \text{ ft/s} \qquad \omega_x = 0.6667 \text{ rad/s}$$

$$\omega_y = 0.3333 \text{ rad/s} \qquad \omega_z = 0.8333 \text{ rad/s}$$

Thus,

$$\mathbf{v}_B = \{6.00\mathbf{j}\} \text{ ft/s} \qquad \textbf{Ans.}$$

$$\omega = \{0.667\mathbf{i} + 0.333\mathbf{j} + 0.833\mathbf{k}\} \text{ rad/s} \qquad \textbf{Ans.}$$

© 2010 Pearson Education, Inc., Upper Saddle River, NJ. All rights reserved. This material is protected under all copyright laws as they currently exist. No portion of this material may be reproduced, in any form or by any means, without permission in writing from the publisher.

20–22. The rod AB is attached to collars at its ends by ball-and-socket joints. If collar A has an acceleration of $\mathbf{a}_A = \{8\mathbf{i}\}$ ft/s^2 and a velocity $\mathbf{v}_A = \{3\mathbf{i}\}$ ft/s, determine the angular acceleration of the rod and the acceleration of collar B at the instant shown. Assume the angular acceleration of the rod is directed perpendicular to the rod.

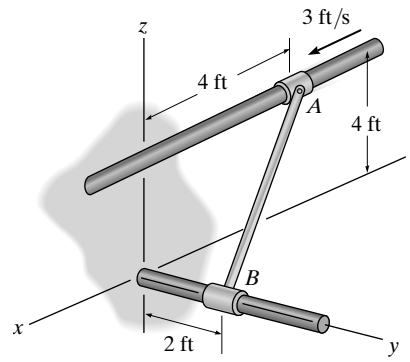

Velocity Equation: Here, $\mathbf{r}_{B/A} = \{[0 - (-4)]\,\mathbf{i} + (2 - 0)\,\mathbf{j} + (0 - 4)\mathbf{k}\}$ ft $= \{4\mathbf{i} + 2\mathbf{j} - 4\mathbf{k}\}$ ft, $\mathbf{v}_A = \{3\mathbf{i}\}$ ft/s, $\mathbf{v}_B = v_B\,\mathbf{j}$ and $\omega = \omega_x\,\mathbf{i} + \omega_y\,\mathbf{j} + \omega_z\,\mathbf{k}$. Applying Eq. 20–7. we have

$$\mathbf{v}_B = \mathbf{v}_A + \omega \times \mathbf{r}_{B/A}$$

$$v_B\,\mathbf{j} = 3\mathbf{i} + \left(\omega_x\,\mathbf{i} + \omega_y\,\mathbf{j} + \omega_z\mathbf{k}\right) \times (4\mathbf{i} + 2\mathbf{j} - 4\mathbf{k})$$

$$v_B\,\mathbf{j} = \left(3 - 4\omega_y - 2\omega_z\right)\mathbf{i} + (4\omega_x + 4\omega_z)\,\mathbf{j} + \left(2\omega_x - 4\omega_y\right)\mathbf{k}$$

Equating $\mathbf{i}, \mathbf{j}, \mathbf{k}$ components, we have

$$3 - 4\omega_y - 2\omega_z = 0 \qquad \textbf{[1]}$$

$$v_B = 4\omega_x + 4\omega_z \qquad \textbf{[2]}$$

$$2\omega_x - 4\omega_y = 0 \qquad \textbf{[3]}$$

If ω is specified acting *perpendicular* to the axis of rod AB, then

$$\omega \cdot \mathbf{r}_{B/A} = 0$$

$$\left(\omega_x\,\mathbf{i} + \omega_y\,\mathbf{j} + \omega_z\,\mathbf{k}\right) \cdot (4\mathbf{i} + 2\mathbf{j} - 4\mathbf{k}) = 0$$

$$4\omega_x + 2\omega_y - 4\omega_z = 0 \qquad \textbf{[4]}$$

Solving Eqs. [1], [2], [3] and [4] yields

$$v_B = 6.00 \text{ ft/s} \qquad \omega_x = 0.6667 \text{ rad/s}$$

$$\omega_y = 0.3333 \text{ rad/s} \qquad \omega_z = 0.8333 \text{ rad/s}$$

Thus, $\omega = \{0.6667\mathbf{i} + 0.3333\mathbf{j} + 0.8333\mathbf{k}\}$ rad/s

Acceleration Equation: With $\alpha = \alpha_x\,\mathbf{i} + \alpha_y\,\mathbf{j} + \alpha_z\,\mathbf{k}$ and the result obtained above, applying Eq. 20–8, we have

$$\mathbf{a}_B = \mathbf{a}_A + \alpha \times \mathbf{r}_{B/A} + \omega \times (\omega \times \mathbf{r}_{B/A})$$

$$a_B\,\mathbf{j} = 8\mathbf{i} + \left(\alpha_x\,\mathbf{i} + \alpha_y\,\mathbf{j} + \alpha_z\mathbf{k}\right) \times (4\mathbf{i} + 2\mathbf{j} - 4\mathbf{k})$$

© 2010 Pearson Education, Inc., Upper Saddle River, NJ. All rights reserved. This material is protected under all copyright laws as they currently exist. No portion of this material may be reproduced, in any form or by any means, without permission in writing from the publisher.

20–22. Continued

$$+(0.6667\mathbf{i} + 0.3333\mathbf{j} + 0.8333\mathbf{k}) \times [(0.6667\mathbf{i} + 0.3333\mathbf{j} + 0.8333\mathbf{k}) \times (4\mathbf{i} + 2\mathbf{j} - 4\mathbf{k})$$

$$a_B\,\mathbf{j} = \left(3 - 4\alpha_y - 2\alpha_z\right)\mathbf{i} + (-2.50 + 4\alpha_x + 4\alpha_z)\mathbf{j} + \left(5 + 2\alpha_x - 4\alpha_y\right)\mathbf{k}$$

Equating $\mathbf{i}, \mathbf{j}, \mathbf{k}$ components, we have

$$3 - 4\alpha_y - 2\alpha_z = 0 \qquad \textbf{[5]}$$

$$a_B = -2.50 + 4\alpha_x + 4\alpha_z \qquad \textbf{[6]}$$

$$5 + 2\alpha_x - 4\alpha_y = 0 \qquad \textbf{[7]}$$

If α is specified acting *perpendicular* to the axis of rod AB, then

$$\alpha \cdot \mathbf{r}_{B/A} = 0$$

$$\left(\alpha_x\,\mathbf{i} + \alpha_y\,\mathbf{j} + \alpha_2\,\mathbf{k}\right) \cdot (4\mathbf{i} + 2 - 4\mathbf{k}) = 0$$

$$4\alpha_x + 2\alpha_y - 4\alpha_z = 0 \qquad \textbf{[8]}$$

Solving Eqs. [5], [6], [7] and [8] yields

$$a_B = -6.50 \text{ ft/s}^2 \qquad \alpha_x = -0.7222 \text{ rad/s}^2$$

$$\alpha_y = 0.8889 \text{ rad/s} \qquad \alpha_z = -0.2778 \text{ rad/s}^2$$

Thus,

$$\mathbf{a}_B = \{-6.50\mathbf{j}\} \text{ ft/s}^2 \qquad \textbf{Ans.}$$

$$\alpha = \{-0.722\mathbf{i} + 0.889\mathbf{j} - 0.278\mathbf{k}\} \text{ rad/s}^2 \qquad \textbf{Ans.}$$

© 2010 Pearson Education, Inc., Upper Saddle River, NJ. All rights reserved. This material is protected under all copyright laws as they currently exist. No portion of this material may be reproduced, in any form or by any means, without permission in writing from the publisher.

20–23. Rod AB is attached to collars at its ends by ball-and-socket joints. If collar A moves upward with a velocity of $\mathbf{v}_A = \{8\mathbf{k}\}$ ft/s, determine the angular velocity of the rod and the speed of collar B at the instant shown. Assume that the rod's angular velocity is directed perpendicular to the rod.

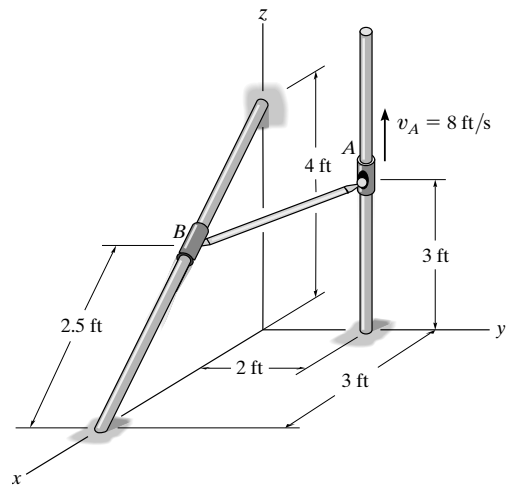

$\mathbf{v}_B = \{8\mathbf{k}\}$ ft/s $\qquad \mathbf{v}_B = -\frac{3}{5}v_B\mathbf{i} + \frac{4}{5}v_B\mathbf{k} \qquad \omega_{AB} = \omega_x\mathbf{i} + \omega_y\mathbf{j} + \omega_z\mathbf{k}$

$$\mathbf{r}_{B/A} = \{1.5\mathbf{i} - 2\mathbf{j} - 1\mathbf{k}\}\text{ ft}$$

$$\mathbf{v}_B = \mathbf{v}_A + \omega_{AB} \times \mathbf{r}_{B/A}$$

$$-\frac{3}{5}v_B\mathbf{i} + \frac{4}{5}v_B\mathbf{k} = 8\mathbf{k} + \begin{vmatrix} \mathbf{i} & \mathbf{j} & \mathbf{k} \\ \omega_x & \omega_y & \omega_z \\ 1.5 & -2 & -1 \end{vmatrix}$$

Equating $\mathbf{i}$, $\mathbf{j}$, and $\mathbf{k}$

$$-\omega_z + 2\omega_z = -\frac{3}{5}v_B \qquad \textbf{(1)}$$

$$\omega_z + 1.5\omega_z = 0 \qquad \textbf{(2)}$$

$$\omega - 2\omega_x - 1.5\omega_x = \frac{4}{5}v_B \qquad \textbf{(3)}$$

Since ω_{AB} is perpendicular to the axis of the rod,

$$\omega_{AB}\cdot\mathbf{r}_{B/A} = (\omega_x\mathbf{i} + \omega_y\mathbf{j} + \omega_z\mathbf{k})\cdot(1.5\mathbf{i} - 2\mathbf{j} - 1\mathbf{k}) = 0$$

$$1.5\omega_x - 2\omega_y - \omega_z = 0 \qquad \textbf{(4)}$$

Solving Eqs.(1) to (4) yields:

$\omega_x = 1.1684$ rad/s $\qquad \omega_y = 1.2657$rad/s $\qquad \omega_z = -0.7789$ rad/s

$$v_B = 4.71\text{ ft/s} \qquad \textbf{Ans.}$$

Then $\omega_{AB} = \{1.17\mathbf{i} + 1.27\mathbf{j} - 0.779\mathbf{k}\}$ rad/s **Ans.**

© 2010 Pearson Education, Inc., Upper Saddle River, NJ. All rights reserved. This material is protected under all copyright laws as they currently exist. No portion of this material may be reproduced, in any form or by any means, without permission in writing from the publisher.

***20–24.** Rod AB is attached to collars at its ends by ball-and-socket joints. If collar A moves upward with an acceleration of $\mathbf{a}_A = \{4\mathbf{k}\}\text{ft/s}^2$, determine the angular acceleration of rod AB and the magnitude of acceleration of collar B. Assume that the rod's angular acceleration is directed perpendicular to the rod.

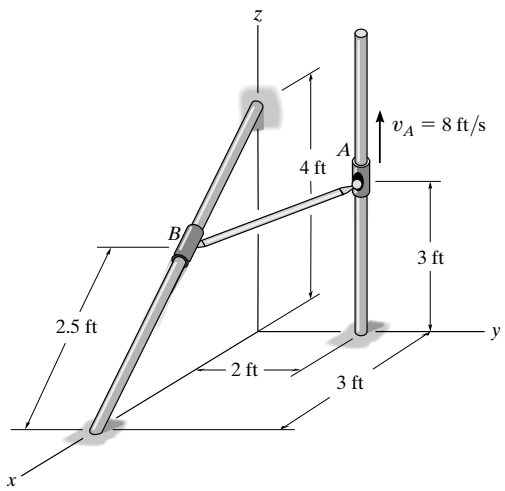

From Prob. 20–23

$\omega_{AB} = \{1.1684\mathbf{i} + 1.2657\mathbf{j} - 0.7789\mathbf{k}\}$ rad/s

$\mathbf{r}_{B\cdot A} = \{1.5\mathbf{i} - 2\mathbf{j} - 1\mathbf{k}\}$ ft

$\alpha_{AB} = \alpha_x\,\mathbf{i} + \alpha_y\,\mathbf{j} + \alpha_z\,\mathbf{k}$

$$\mathbf{a}_A = \{4\mathbf{k}\}\ \text{ft/s}^2 \qquad \mathbf{a}_B = -\frac{3}{5}a_B\,\mathbf{i} + \frac{4}{5}a_B\,\mathbf{k}$$

$$\mathbf{a}_B = \mathbf{a}_A + \alpha_{AB} \times \mathbf{r}_{B/A} + \omega_{AB} \times (\omega_{AB} \times \mathbf{r}_{B/A})$$

$$-\frac{3}{5}a_B\,\mathbf{i} + \frac{4}{5}a_B\,\mathbf{k} = 4\mathbf{k} + (\alpha_x\mathbf{i} + \alpha_y\,\mathbf{j} + \alpha_z\,\mathbf{k}) \times (1.5\mathbf{i} - 2\mathbf{j} - 1\mathbf{k})$$
$$+(1.1684\mathbf{i} + 1.2657\mathbf{j} - 0.7789\mathbf{k})$$
$$\times\left[(1.1684\mathbf{i} + 1.2657\mathbf{j} - 0.7789\mathbf{k}) \times (1.5\mathbf{i} - 2\mathbf{j} - 1\mathbf{k})\right]$$

Equating **i**, **j**, and **k** components

$$-\alpha_y + 2\alpha_z - 5.3607 = -\frac{3}{5}a_B \qquad \textbf{(1)}$$

$$\alpha_x + 1.5\alpha_z + 7.1479 = 0 \qquad \textbf{(2)}$$

$$7.5737 - 2\alpha_x - 1.5\alpha_y = \frac{4}{5}a \qquad \textbf{(3)}$$

Since α_{AB} is perpendicular to the axis of the rod,

$$\alpha_{AB}\cdot\mathbf{r}_{B/A} = (\alpha_x\,\mathbf{i} + \alpha_y\,\mathbf{j} + \alpha_z\mathbf{k})\cdot(1.5\mathbf{i} - 2\mathbf{j} - 1\mathbf{k}) = 0$$

$$1.5\alpha_x - 2\alpha_y - \alpha_z = 0 \qquad \textbf{(4)}$$

Solving Eqs.(1) to (4) yields:

$\alpha_x = -2.7794\ \text{rad/s}^2 \qquad \alpha_y = -0.6285\text{rad/s}^2 \qquad \alpha_z = -2.91213\ \text{rad/s}^2$

$$a_B = 17.6\ \text{ft/s}^2 \qquad \textbf{Ans.}$$

Then $\alpha_{AB} = \{-2.78\mathbf{i} - 0.628\mathbf{j} - 2.91\mathbf{k}\}\ \text{rad/s}^2$ **Ans.**

© 2010 Pearson Education, Inc., Upper Saddle River, NJ. All rights reserved. This material is protected under all copyright laws as they currently exist. No portion of this material may be reproduced, in any form or by any means, without permission in writing from the publisher.

•20–25. If collar A moves with a constant velocity of $\mathbf{v}_A = \{10\mathbf{i}\}$ ft/s, determine the velocity of collar B when rod AB is in the position shown. Assume the angular velocity of AB is perpendicular to the rod.

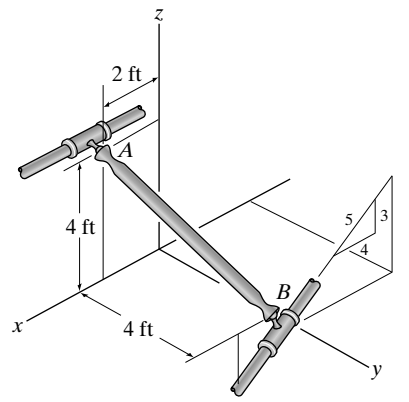

Since rod AB undergoes general motion $\mathbf{v}_A$ and $\mathbf{v}_B$ can be related using the relative velocity equation.

$$\mathbf{v}_B = \mathbf{v}_A + \omega_{AB} \times \mathbf{r}_{B/A}$$

Assume $\mathbf{v}_B = \frac{4}{5}v_B\,\mathbf{i} - \frac{3}{5}v_B\,\mathbf{k}$ and $\omega_{AB} = (\omega_{AB})_x\,\mathbf{i} + (\omega_{AB})_y\,\mathbf{j} + (\omega_{AB})_z\,\mathbf{k}$. Also,

$\mathbf{r}_{B/A} = [-2\mathbf{i} + 4\mathbf{j} - 4\mathbf{k}]$ ft. Thus,

$$\frac{4}{5}v_B\mathbf{i} - \frac{3}{5}v_B\mathbf{k} = 10\mathbf{i} + \left[(\omega_{AB})_x\,\mathbf{i} + (\omega_{AB})_y\mathbf{j} + (\omega_{AB})_z\mathbf{k}\right] \times (-2\mathbf{i} + 4\mathbf{j} - 4\mathbf{k})$$

$$\frac{4}{5}v_B\mathbf{i} - \frac{3}{5}v_B\mathbf{k} = \left[10 - 4(\omega_{AB})_y - 4(\omega_{AB})_z\right]\mathbf{i} + \left[4(\omega_{AB})_x - 2(\omega_{AB})_z\right]\mathbf{j} + \left[4(\omega_{AB})_x + 2(\omega_{AB})_y\right]\mathbf{k}$$

Equating the $\mathbf{i}$, $\mathbf{j}$, and $\mathbf{k}$ components

$$\frac{4}{5}v_B = 10 - 4(\omega_{AB})_y - 4(\omega_{AB})_z \qquad \textbf{(1)}$$

$$0 = 4(\omega_{AB})_x - 2(\omega_{AB})_z \qquad \textbf{(2)}$$

$$-\frac{3}{5}v_B = 4(\omega_{AB})_x + 2(\omega_{AB})_y \qquad \textbf{(3)}$$

The fourth equation can be obtained from the dot product of

$$\omega_{AB} \cdot \mathbf{r}_{B/A} = 0$$

$$\left[(\omega_{AB})_x\,\mathbf{i} + (\omega_{AB})_y\,\mathbf{j} + (\omega_{AB})_z\mathbf{k}\right] \cdot (-2\mathbf{i} + 4\mathbf{j} - 4\mathbf{k}) = 0$$

$$-2(\omega_{AB})_x + 4(\omega_{AB})_y - 4(\omega_{AB})_z = 0 \qquad \textbf{(4)}$$

Solving Eqs. (1) through (4),

$(\omega_{AB})_x = 1.667$ rad/s $\qquad (\omega_{AB})_y = 4.167$ rad/s $\qquad (\omega_{AB})_z = 3.333$ rad/s

$$v_B = -25 \text{ ft/s}$$

Then,

$$\mathbf{v}_B = \frac{4}{5}(-25)\mathbf{i} - \frac{3}{5}(-25)\mathbf{k} = [-20\mathbf{i} + 15\mathbf{k}] \text{ ft/s} \qquad \textbf{Ans.}$$

© 2010 Pearson Education, Inc., Upper Saddle River, NJ. All rights reserved. This material is protected under all copyright laws as they currently exist. No portion of this material may be reproduced, in any form or by any means, without permission in writing from the publisher.

20–26. When rod AB is in the position shown, collar A moves with a velocity of $\mathbf{v}_A = \{10\mathbf{i}\}$ ft/s and acceleration of $\mathbf{a}_A = \{2\mathbf{i}\}$ ft/s^2. Determine the acceleration of collar B at this instant. Assume the angular velocity and angular acceleration of AB are perpendicular to the rod.

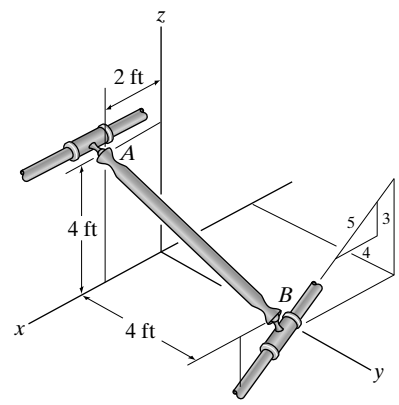

For general motion, $\mathbf{a}_A$ and $\mathbf{a}_B$ can be related using the relative acceleration equation.

$$\mathbf{a}_B = \mathbf{a}_A + \alpha_{AB} \times \mathbf{r}_{B/A} + \omega_{AB} \times (\omega_{AB} \times \mathbf{r}_{B/A})$$

Using the result of Prob. 19-17, $\omega_{AB} = [1.667\mathbf{i} + 4.166\mathbf{j} + 3.333\mathbf{k}]$ rad/s.

Assume $\mathbf{a}_B = \frac{4}{5}a_B\mathbf{i} - \frac{3}{5}a_B\mathbf{k}$ and $\alpha_{AB} = (\alpha_{AB})_x\mathbf{i} + (\alpha_{AB})_y\mathbf{j} + (\alpha_{AB})_z\mathbf{k}$. Also,

$$\mathbf{r}_{B/A} = [-2\mathbf{i} + 4\mathbf{j} - 4\mathbf{k}] \text{ ft. Thus,}$$

$$\frac{4}{5}a_B\mathbf{i} - \frac{3}{5}a_B\mathbf{k} = 2\mathbf{i} + \left[(\alpha_{AB})_x\mathbf{i} + (\alpha_{AB})_y\mathbf{j} + (\alpha_{AB})_z\mathbf{k}\right] \times (-2\mathbf{i} + 4\mathbf{j} - 4\mathbf{k})$$

$$+(1.667\mathbf{i} + 4.166\mathbf{j} + 3.333\mathbf{k}) \times [(1.667\mathbf{i} + 4.166\mathbf{j} + 3.333\mathbf{k}) \times (-2\mathbf{i} + 4\mathbf{j} - 4\mathbf{k})]$$

$$\frac{4}{5}a_B\mathbf{i} - \frac{3}{5}a_B\mathbf{k} = \left[64.5 - 4(\alpha_{AB})_y - 4(\alpha_{AB})_z\right]\mathbf{i} + \left[4(\alpha_{AB})_x - 2(\alpha_{AB})_z - 125\right]\mathbf{j} + \left[4(\alpha_{AB})_x + 2(\alpha_{AB})_y + 125\right]\mathbf{k}$$

Equating the $\mathbf{i}$, $\mathbf{j}$, and $\mathbf{k}$ components

$$\frac{4}{5}a_B = 64.5 - 4(\alpha_{AB})_y - 4(\alpha_{AB})_z \qquad \textbf{(1)}$$

$$0 = 4(\alpha_{AB})_x - 2(\alpha_{AB})_z - 125 \qquad \textbf{(2)}$$

$$-\frac{3}{5}a_B = 4(\alpha_{AB})_x + 2(\alpha_{AB})_y + 125 \qquad \textbf{(3)}$$

The fourth equation can be obtained from the dot product of

$$\alpha_{AB} \cdot \mathbf{r}_{B/A} = 0$$

$$\left[(\alpha_{AB})_x\mathbf{i} + (\alpha_{AB})_y\mathbf{j} + (\alpha_{AB})_z\mathbf{k}\right] \cdot (-2\mathbf{i} + 4\mathbf{j} - 4\mathbf{k}) = 0$$

$$-2(\alpha_{AB})_x + 4(\alpha_{AB})_y - 4(\alpha_{AB})_z = 0 \qquad \textbf{(4)}$$

Solving Eqs. (1) through (4),

$$(\alpha_{AB})_x = 94.08 \text{ rad/s}^2 \qquad (\alpha_{AB})_y = 172.71 \text{ rad/s}^2 \qquad (\alpha_{AB})_z = 125.67 \text{ rad/s}^2$$

$$a_B = -1411.25 \text{ ft/s}^2$$

Then,

$$\mathbf{a}_B = \frac{4}{5}(-1411.25)\mathbf{i} - \frac{3}{5}(-1411.25)\mathbf{k} = [-1129\mathbf{i} + 846.75\mathbf{k}] \text{ ft/s} \qquad \textbf{Ans.}$$

© 2010 Pearson Education, Inc., Upper Saddle River, NJ. All rights reserved. This material is protected under all copyright laws as they currently exist. No portion of this material may be reproduced, in any form or by any means, without permission in writing from the publisher.

20–27. If collar A moves with a constant velocity of $\mathbf{v}_A = \{3\mathbf{i}\}$ m/s, determine the velocity of collar B when rod AB is in the position shown. Assume the angular velocity of AB is perpendicular to the rod.

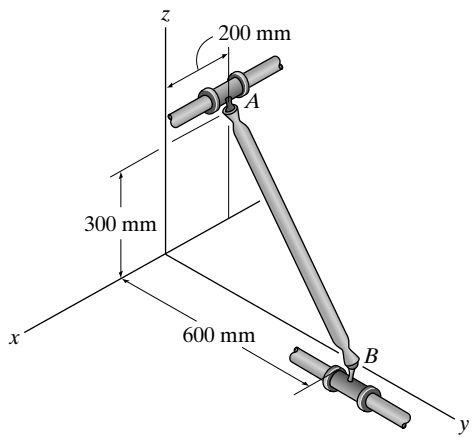

Since rod AB undergoes general motion $\mathbf{v}_A$ and $\mathbf{v}_B$ can be related using the relative velocity equation.

$$\mathbf{v}_B = \mathbf{v}_A + \omega_{AB} \times \mathbf{r}_{B/A}$$

Assume $\mathbf{v}_B = v_B\,\mathbf{j}$, $\omega_{AB} = \left[(\omega_{AB})_x\,\mathbf{i} + (\omega_{AB})_y\,\mathbf{j} + (\omega_{AB})_z\,\mathbf{k}\right]$, and

$$\mathbf{r}_{B/A} = [0.2\mathbf{i} + 0.6\mathbf{j} - 0.3\mathbf{k}]\text{ ft. Thus,}$$

$$v_B\,\mathbf{j} = 3\mathbf{i} + \left[(\omega_{AB})_x\,\mathbf{i} + (\omega_{AB})_y\mathbf{j} + (\omega_{AB})_z\,\mathbf{k}\right] \times (0.2\mathbf{i} + 0.6\mathbf{j} - 0.3\mathbf{k})$$

$$v_B\,\mathbf{j} = \left[3 - 0.3(\omega_{AB})_y - 0.6(\omega_{AB})_z\right]\mathbf{i} + \left[0.3(\omega_{AB})_x + 0.2(\omega_{AB})_z\right]\mathbf{j} + \left[0.6(\omega_{AB})_x - 0.2(\omega_{AB})_y\right]\mathbf{k}$$

Equating the $\mathbf{i}$, $\mathbf{j}$, and $\mathbf{k}$ components

$$0 = 3 - 0.3(\omega_{AB})_y - 0.6(\omega_{AB})_z \qquad \textbf{(1)}$$

$$v_B = 0.3(\omega_{AB})_x + 0.2(\omega_{AB})_z \qquad \textbf{(2)}$$

$$0 = 0.6(\omega_{AB})_x - 0.2(\omega_{AB})_y \qquad \textbf{(3)}$$

The fourth equation can be obtained from the dot product of

$$\omega_{AB} \cdot \mathbf{r}_{B/A} = 0$$

$$\left[(\omega_{AB})_x\,\mathbf{i} + (\omega_{AB})_y\mathbf{j} + (\omega_{AB})_z\,\mathbf{k}\right] \cdot (0.2\mathbf{i} + 0.6\mathbf{j} - 0.3\mathbf{k}) = 0$$

$$0.2(\omega_{AB})_x + 0.6(\omega_{AB})_y - 0.3(\omega_{AB})_z = 0 \qquad \textbf{(4)}$$

Solving Eqs. (1) through (4),

$$(\omega_{AB})_x = 0.6122\text{ rad/s} \qquad (\omega_{AB})_y = 1.837\text{ rad/s} \qquad (\omega_{AB})_z = 4.082\text{ rad/s}$$

$$v_B = 1\text{ m/s}$$

Then,

$$\mathbf{v}_B = [1\mathbf{j}]\text{m/s} \qquad \textbf{Ans.}$$

© 2010 Pearson Education, Inc., Upper Saddle River, NJ. All rights reserved. This material is protected under all copyright laws as they currently exist. No portion of this material may be reproduced, in any form or by any means, without permission in writing from the publisher.

***20–28.** When rod AB is in the position shown, collar A moves with a velocity of $\mathbf{v}_A = \{3\mathbf{i}\}$ m/s and acceleration of $\mathbf{a}_A = \{0.5\mathbf{i}\}$ m/s^2. Determine the acceleration of collar B at this instant. Assume the angular velocity and angular acceleration of AB are perpendicular to the rod.

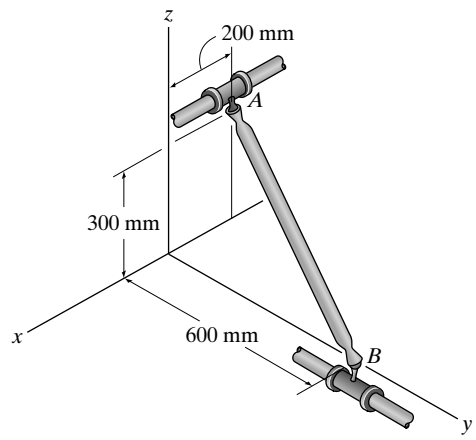

For general motion, $\mathbf{a}_A$ and $\mathbf{a}_B$ can be related using the relative acceleration equation.

$$\mathbf{a}_B = \mathbf{a}_A + \alpha_{AB} \times \mathbf{r}_{B/A} + \omega_{AB} \times (\omega_{AB} \times \mathbf{r}_{B/A})$$

Using the result of Prob. 19-22, $\omega_{AB} = [0.6122\mathbf{i} + 1837\mathbf{j} + 4.082\mathbf{k}]$ rad/s

Also, $\mathbf{a}_B = a_B\,\mathbf{j}$, $\alpha_{AB} = (\alpha_{AB})_x\,\mathbf{i} + (\alpha_{AB})_y\,\mathbf{j} + (\alpha_{AB})_z\,\mathbf{k}$, and
$\mathbf{r}_{B/A} = [0.2\mathbf{i} + 0.6\mathbf{j} - 0.3\mathbf{k}]$ m. Thus,

$$\mathbf{a}_B\,\mathbf{j} = (0.5\mathbf{i}) + \left[(\alpha_{AB})_x\,\mathbf{i} + (\alpha_{AB})_y\,\mathbf{j} + (\alpha_{AB})_z\,\mathbf{k}\right] \times (0.2\mathbf{i} + 0.6\mathbf{j} - 0.3\mathbf{k})$$
$$+(0.6122\mathbf{i} + 1837\mathbf{j} + 4.082\mathbf{k}) \times [(0.6122\mathbf{i} + 1837\mathbf{j} + 4.082\mathbf{k}) \times (0.2\mathbf{i} + 0.6\mathbf{j} - 0.3\mathbf{k})]$$

$$a_B\mathbf{j} = -\left[0.3(\alpha_{AB})_y + 0.6(\alpha_{AB})_z + 3.5816\right]\mathbf{i} + \left[0.3(\alpha_{AB})_x + 0.2(\alpha_{AB})_z - 12.2449\right]\mathbf{j} + \left[0.6(\alpha_{AB})_x - 0.2(\alpha_{AB})_y + 6.1224\right]\mathbf{k}$$

Equating the $\mathbf{i}$, $\mathbf{j}$, and $\mathbf{k}$ components

$$0 = -\left[0.3(\alpha_{AB})_y + 0.6(\alpha_{AB})_z + 3.5816\right] \qquad \textbf{(1)}$$

$$a_B = 0.3(\alpha_{AB})_x + 0.2(\alpha_{AB})_z - 12.2449 \qquad \textbf{(2)}$$

$$0 = 0.6(\alpha_{AB})_x - 0.2(\alpha_{AB})_y + 6.1224 \qquad \textbf{(3)}$$

The fourth equation can be obtained from the dot product of

$$\alpha_{AB} \cdot \mathbf{r}_{B/A} = 0$$

$$\left[(\alpha_{AB})_x\,\mathbf{i} + (\alpha_{AB})_y\,\mathbf{j} + (\alpha_{AB})_z\,\mathbf{k}\right] \cdot (0.2\mathbf{i} + 0.6\mathbf{j} - 0.3\mathbf{k}) = 0$$

$$0.2(\alpha_{AB})_x + 0.6(\alpha_{AB})_y - 0.3(\alpha_{AB})_z = 0 \qquad \textbf{(4)}$$

Solving Eqs. (1) through (4),

$(\alpha_{AB})_x = -10.1020$ rad/s^2 $\quad (\alpha_{AB})_y = 0.3061$rad/s^2 $\quad (\alpha_{AB})_z = -6.1224$ rad/s^2

$$a_B = -16.5 \text{ m/s}^2$$

Then,

$$\mathbf{a}_B = [-16.5\mathbf{j}]\text{m/s}^2 \qquad \textbf{Ans.}$$

© 2010 Pearson Education, Inc., Upper Saddle River, NJ. All rights reserved. This material is protected under all copyright laws as they currently exist. No portion of this material may be reproduced, in any form or by any means, without permission in writing from the publisher.

•20–29. If crank BC rotates with a constant angular velocity of $\omega_{BC} = 6$ rad/s, determine the velocity of the collar at A. Assume the angular velocity of AB is perpendicular to the rod.

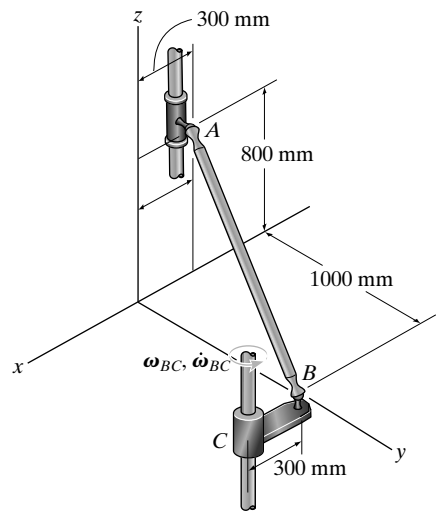

Here, $\mathbf{r}_{C/B} = [-0.3\mathbf{i}]$ m and $\omega_{BC} = [6\mathbf{k}]$ rad/s. Since crank BC rotates about a fixed axis, then

$$\mathbf{v}_B = \omega_{AB} \times r_{B/C} = \left(6\mathbf{k}\right) \times \left(-0.3\mathbf{i}\right) = [-1.8\mathbf{j}] \text{ m/s}$$

Since rod AB undergoes general motion $\mathbf{v}_A$ and $\mathbf{v}_B$ can be related using the relative velocity equation.

$$\mathbf{v}_A = \mathbf{v}_B + \omega_{AB} \times \mathbf{r}_{A/B}$$

Here, $\mathbf{v}_B = v_A\,\mathbf{k}, \omega_{AB} = \left[(\omega_{AB})_x\,\mathbf{i} + (\omega_{AB})_y\,\mathbf{j} + (\omega_{AB})_z\,\mathbf{k}\right]$, and

$$\mathbf{r}_{A/B} = [-0.3\mathbf{i} - 1\mathbf{j} + 0.8\mathbf{k}] \text{ m. Thus,}$$

$$v_A\,\mathbf{k} = -1.8\mathbf{j} + \left[(\omega_{AB})_x\,\mathbf{i} + (\omega_{AB})_y\mathbf{j} + (\omega_{AB})_z\,\mathbf{k}\right] \times (-0.3\mathbf{i} - 1\mathbf{j} + 0.8\mathbf{k})$$

$$v_A\,\mathbf{k} = \left[0.8(\omega_{AB})_y + (\omega_{AB})_z\right]\mathbf{i} - \left[0.8(\omega_{AB})_x + 0.3(\omega_{AB})_z + 1.8\right]\mathbf{j} + \left[0.3(\omega_{AB})_y - (\omega_{AB})_x\right]\mathbf{k}$$

Equating the $\mathbf{i}$, $\mathbf{j}$, and $\mathbf{k}$ components

$$0 = 0.8(\omega_{AB})_y + (\omega_{AB})_z \qquad \textbf{(1)}$$

$$0 = -\left[0.8(\omega_{AB})_x + 0.3(\omega_{AB})_z + 1.8\right] \qquad \textbf{(2)}$$

$$v_A = 0.3(\omega_{AB})_y - (\omega_{AB})_x \qquad \textbf{(3)}$$

The fourth equation can be obtained from the dot product of

$$\omega_{AB} \cdot \mathbf{r}_{A/B} = 0$$

$$\left[(\omega_{AB})_x\,\mathbf{i} + (\omega_{AB})_y\,\mathbf{j} + (\omega_{AB})_z\,\mathbf{k}\right] \cdot (-0.3\mathbf{i} - 1\mathbf{j} + 0.8\mathbf{k}) = 0$$

$$-0.3(\omega_{AB})_x - (\omega_{AB})_y + 0.8(\omega_{AB})_z = 0 \qquad \textbf{(4)}$$

Solving Eqs. (1) through (4),

$(\omega_{AB})_x = -2.133$ rad/s $\qquad (\omega_{AB})_y = 0.3902$rad/s $\qquad (\omega_{AB})_z = -0.3121$ rad/s^2

$v_A = 2.25$ m/s

Then,

$$\mathbf{v}_A = [2.25\mathbf{k}]\text{m/s} \qquad \textbf{Ans.}$$

© 2010 Pearson Education, Inc., Upper Saddle River, NJ. All rights reserved. This material is protected under all copyright laws as they currently exist. No portion of this material may be reproduced, in any form or by any means, without permission in writing from the publisher.

20–30. If crank BC is rotating with an angular velocity of $\omega_{BC} = 6$ rad/s and an angular acceleration of $\dot{\omega}_{BC} = 1.5$ rad/s^2, determine the acceleration of collar A at this instant. Assume the angular velocity and angular acceleration of AB are perpendicular to the rod.

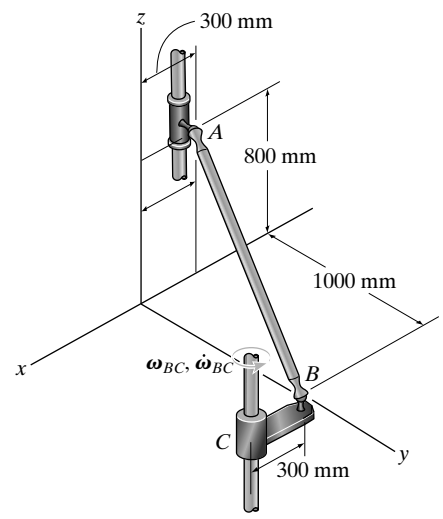

Here, $\mathbf{r}_{CB} = [-0.3\mathbf{i}]$ m and $\alpha_{BC} = [1.5\mathbf{k}]$ rad/s^2. Since crank BC rotates about a fixed axis, then

$$\mathbf{a}_B = \alpha_{BC} \times \mathbf{r}_{CB} + \omega_{BC} \times (\omega_{BC} \times r_{CB}) = (1.5\mathbf{k}) \times (-0.3\mathbf{i}) + 6\mathbf{k} \times [(6\mathbf{k}) \times (-0.3\mathbf{i})]$$

$$= [10.8\mathbf{i} - 0.45\mathbf{j}] \text{ m/s}^2$$

For general motion, $\mathbf{a}_A$ and $\mathbf{a}_B$ can be related using the acceleration equation.

$$\mathbf{a}_A = \mathbf{a}_B + \alpha_{AB} \times \mathbf{r}_{A/B} + \omega_{AB} \times (\omega_{AB} \times \mathbf{r}_{A/B})$$

Using the result of Prob. 20-29, $\omega_{AB} = [-2.133\mathbf{i} + 0.3902\mathbf{j} - 0.3121\mathbf{k}]$ rad/s.

Also, $\mathbf{a}_A = a_A\,\mathbf{k}$, $\alpha_{AB} = (\alpha_{AB})_x\,\mathbf{i} + (\alpha_{AB})_y\,\mathbf{j} + (\alpha_{AB})_z\,\mathbf{k}$, and

$$\mathbf{r}_{A/B} = [-0.3\mathbf{i} - 1\mathbf{j} + 0.8\mathbf{k}] \text{ m. Thus,}$$

$$a_A\mathbf{k} = (10.8\mathbf{i} - 0.45\mathbf{j}) + \left[(\alpha_{AB})_x\,\mathbf{i} + (\alpha_{AB})_y\mathbf{j} + (\alpha_{AB})_z\,\mathbf{k}\right] \times (-0.3\mathbf{i} - 1\mathbf{j} + 0.8\mathbf{k})$$

$$+(-2.133\mathbf{i} + 0.3902\mathbf{j} - 0.3121\mathbf{k}) \times [(-2.133\mathbf{i} + 0.3902\mathbf{j} - 0.3121\mathbf{k}) \times (-0.3\mathbf{i} - 1\mathbf{j} + 0.8\mathbf{k})]$$

$$a_A\mathbf{k} = \left[0.8(\alpha_{AB})_y + (\alpha_{AB})_z + 12.24\right]\mathbf{i} + \left[4.349 - 0.8(\alpha_{AB})_x - 0.3(\alpha_{AB})_z\right]\mathbf{j} + \left[0.3(\alpha_{AB})_y - (\alpha_{AB})_x - 3.839\right]\mathbf{k}$$

Equating the $\mathbf{i}$, $\mathbf{j}$, and $\mathbf{k}$ components

$$0 = 0.8(\alpha_{AB})_y + (\alpha_{AB})_z + 12.24 \qquad \textbf{(1)}$$

$$0 = 4.349 - 0.8(\alpha_{AB})_x - 0.3(\alpha_{AB})_z \qquad \textbf{(2)}$$

$$a_A = 0.3(\alpha_{AB})_y - (\alpha_{AB})_x - 3.839 \qquad \textbf{(3)}$$

The fourth equation can be obtained from the dot product of

$$\alpha_{AB} \cdot \mathbf{r}_{A/B} = 0$$

$$\left[(\alpha_{AB})_x\,\mathbf{i} + (\alpha_{AB})_y\,\mathbf{j} + (\alpha_{AB})_z\,\mathbf{k}\right] \cdot (-0.3\mathbf{i} - 1\mathbf{j} + 0.8\mathbf{k}) = 0$$

$$-0.3(\alpha_{AB})_x - (\alpha_{AB})_y + 0.8(\alpha_{AB})_z = 0 \qquad \textbf{(4)}$$

Solving Eqs. (1) through (4).

$$(\alpha_{AB})_x = 7.807 \text{ rad/s}^2 \qquad (\alpha_{AB})_y = -7.399 \text{rad/s}^2 \qquad (\alpha_{AB})_z = -6.321 \text{ rad/s}^2$$

$$a_A = -13.9 \text{ m/s}^2$$

Then,

$$\mathbf{a}_A = [-13.9\mathbf{k}] \text{m/s}^2 \qquad \textbf{Ans.}$$

© 2010 Pearson Education, Inc., Upper Saddle River, NJ. All rights reserved. This material is protected under all copyright laws as they currently exist. No portion of this material may be reproduced, in any form or by any means, without permission in writing from the publisher.

20–31. Rod AB is attached to collars at its ends by ball-and-socket joints. If collar A has a velocity $v_A = 15$ ft/s at the instant shown, determine the velocity of collar B. Assume the angular velocity is perpendicular to the rod.

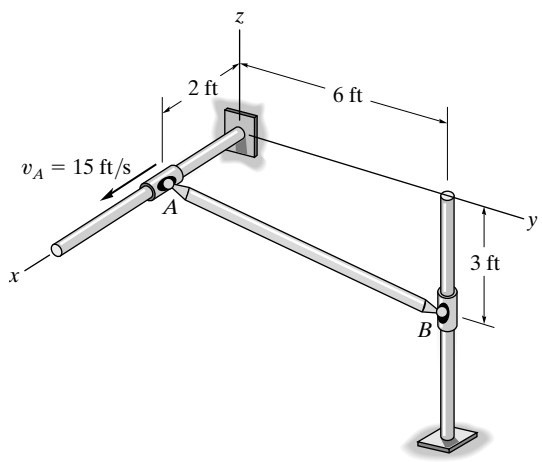

$\mathbf{v}_A = \{15\mathbf{i}\}$ ft/s $\quad \mathbf{v}_B = v_B\mathbf{k} \quad \omega_{AB} = \omega_x\mathbf{i} + \omega_y\mathbf{j} + \omega_z\mathbf{k}$

$$\mathbf{r}_{B/A} = \{-2\,\mathbf{i} + 6\mathbf{j} - 3\mathbf{k}\}\text{ ft}$$

$$\mathbf{v}_B = \mathbf{v}_A + \omega_{AB} \times \mathbf{r}_{B/A}$$

$$v_B\mathbf{k} = 15\mathbf{i} + \begin{vmatrix} \mathbf{i} & \mathbf{j} & \mathbf{k} \\ \omega_x & \omega_y & \omega_z \\ -2 & 6 & -3 \end{vmatrix}$$

Equating **i**, **j**, and **k** components yields:

$$15 - 3\,\omega_y - 6\omega_z = 0 \qquad \textbf{(1)}$$

$$3\,\omega_x - 2\,\omega_z = 0 \qquad \textbf{(2)}$$

$$6\omega_x + 2\omega_y = v_B \qquad \textbf{(3)}$$

If ω_{AB} is perpendicular to the axis of the rod,

$$\omega_{AB}\cdot\mathbf{r}_{B/A} = (\omega_x\,\mathbf{i} + \omega_y\,\mathbf{j} + \omega_z\,\mathbf{k})\cdot(-2\mathbf{i} + 6\mathbf{j} - 3\mathbf{k}) = 0$$

$$-2\omega_x + 6\omega_y - 3\omega_z = 0 \qquad \textbf{(4)}$$

Solving Eqs. (1) to (4) yields:

$\omega_x = 1.2245$ rad/s $\quad \omega_y = 1.3265$ rad/s $\quad \omega_z = 1.8367$ rad/s $\quad v_B = 10$ ft/s

Note: v_B can be obtained by solving Eqs. (1)-(3) without knowing the direction of ω

Hence $\omega_{AB} = \{1.2245\mathbf{i} + 1.3265\mathbf{j} + 1.8367\mathbf{k}\}$ rad/s

$$\mathbf{v}_B = \{10\mathbf{k}\}\text{ ft/s} \qquad \textbf{Ans.}$$

© 2010 Pearson Education, Inc., Upper Saddle River, NJ. All rights reserved. This material is protected under all copyright laws as they currently exist. No portion of this material may be reproduced, in any form or by any means, without permission in writing from the publisher.

***20–32.** Rod AB is attached to collars at its ends by ball-and-socket joints. If collar A has a velocity of $\mathbf{v}_A = \{15\mathbf{i}\}$ ft/s and an acceleration of $\mathbf{a}_A = \{2\mathbf{i}\}$ ft/s^2 at the instant shown, determine the acceleration of collar B. Assume the angular velocity and angular acceleration are perpendicular to the rod.

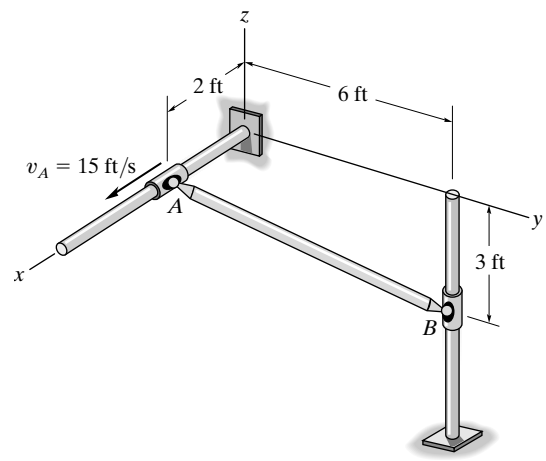

From Prob. 20–31

$$\omega_{AB} = \{1.2245\mathbf{i} + 1.3265\mathbf{j} + 1.8367\mathbf{k}\} \text{ rad/s}$$

$$\mathbf{r}_{B/A} = \{-2\,\mathbf{i} + 6\mathbf{j} - 3\mathbf{k}\} \text{ ft}$$

$$\alpha_{AB} = \alpha_x\,\mathbf{i} + \alpha_y\,\mathbf{j} + \alpha_z\,\mathbf{k}$$

$$\mathbf{a}_A = \{\,2\mathbf{i}\,\} \quad \text{ft/s}^2 \qquad\qquad \mathbf{a}_B = a_B\,\mathbf{k}$$

$$\mathbf{a}_B = \mathbf{a}_A + \alpha_{AB} \times \mathbf{r}_{B/A} + \omega_{AB} \times (\omega_{AB} \times \mathbf{r}_{B/A})$$

$$a_B\,\mathbf{k} = 2\mathbf{i} + (\alpha_x\,\mathbf{i} + \alpha_y\,\mathbf{j} + \alpha_z\mathbf{k}) \times (-2\mathbf{i} + 6\mathbf{j} - 3\mathbf{k})$$
$$+(1.2245\mathbf{i} + 1.3265\mathbf{j} + 1.8367\mathbf{k})$$
$$\times\big[(1.2245\mathbf{i} + 1.3265\mathbf{j} + 1.8367\mathbf{k}) \times (-2\mathbf{i} + 6\mathbf{j} - 3\mathbf{k})\big]$$

Equating $\mathbf{i}$, $\mathbf{j}$, and $\mathbf{k}$ components yields:

$$15.2653 - 3\,\alpha_y - 6\alpha_z = 0 \qquad \textbf{(1)}$$

$$3\alpha_x - 2\alpha_z - 39.7955 = 0 \qquad \textbf{(2)}$$

$$6\alpha_x + 2\alpha_y + 19.8975 = a_B \qquad \textbf{(3)}$$

If α_{AB} is perpendicular to the axis of the rod,

$$\alpha_{AB} \cdot \mathbf{r}_{B/A} = (\alpha_x\,\mathbf{i} + \alpha_y\,\mathbf{j} + \alpha_z\mathbf{k}) \cdot (-2\mathbf{i} + 6\mathbf{j} - 3\mathbf{k}) = 0$$

$$-2\alpha_x + 6\alpha_y - 3\alpha_z = 0 \qquad \textbf{(4)}$$

Solving Eqs. (1) to (4) yields:

$\alpha_x = 13.43$ rad/s^2 $\quad \alpha_y = 4.599$ rad/s^2 $\quad \alpha_z = 0.2449$ rad/s^2 $\quad a_B = 109.7$ ft/s^2

Note: $\mathbf{a}_B$ can be obtained by solving Eqs. (1)-(3) without knowing the direction of α

Hence $\qquad \mathbf{a}_B = \{\,110\mathbf{k}\,\}$ ft/s^2 $\qquad$ **Ans.**

© 2010 Pearson Education, Inc., Upper Saddle River, NJ. All rights reserved. This material is protected under all copyright laws as they currently exist. No portion of this material may be reproduced, in any form or by any means, without permission in writing from the publisher.

•20–33. Rod AB is attached to collars at its ends by ball-and-socket joints. If collar A has a speed $v_A = 3$ m/s, determine the speed of collar B at the instant shown. Assume the angular velocity is perpendicular to the rod.

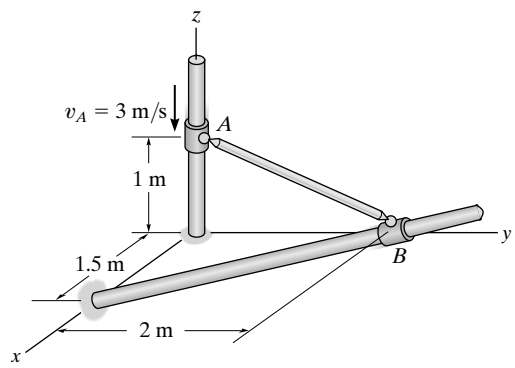

Velocity Equation: Here, $\mathbf{r}_{B/A} = \{(2 - 0)\,\mathbf{j} + (0 - 1\,\mathbf{k})\text{ m} = \{2\mathbf{j} - 1\mathbf{k}\}\text{ m}$,

$\mathbf{v}_A = \{-3\mathbf{k}\}$ m/s, $\mathbf{v}_B = v_B\left[\dfrac{(0 - 1.5)\,\mathbf{i} + (2 - 0)\,\mathbf{j}}{\sqrt{(0 - 1.5)^2 + (2 - 0)^2}}\right] = -0.6\,v_B\,\mathbf{i} + 0.8\,v_B\,\mathbf{j}$ and

$\omega = \omega_x\,\mathbf{i} + \omega_y\,\mathbf{j} + \omega_z\,\mathbf{k}$. Applying Eq. 20–7, we have

$$\mathbf{v}_B = \mathbf{v}_A + \omega \times \mathbf{r}_{B/A}$$

$$-0.6\,v_B\,\mathbf{i} + 0.8\,v_B\,\mathbf{j} = -3\mathbf{k} + (\,\omega_x\mathbf{i} + \omega_y\,\mathbf{j} + \omega_z\,\mathbf{k}) \times (2\mathbf{j} - 1\mathbf{k})$$

$$-0.6\,v_B\,\mathbf{i} + 0.8\,v_B\,\mathbf{j} = (-\,\omega_y - 2\omega_z)\mathbf{i} + \omega_x\,\mathbf{j} + (2\omega_x - 3)\,\mathbf{k}$$

Equating **i**, **j** and **k** components, we have.

$$-0.6\,v_B = -\omega_y - 2\omega_z \qquad \textbf{[1]}$$

$$0.8\,v_B = \omega_x \qquad \textbf{[2]}$$

$$0 = 2\,\omega_x - 3 \qquad \textbf{[3]}$$

If ω is specified acting *perpendicular* to the axis of the rod AB, then

$$\omega \cdot \mathbf{r}_{B/A} = 0$$

$$(\,\omega_x\,\mathbf{i} + \omega_y\,\mathbf{j} + \omega_z\,\mathbf{k}) \cdot (2\mathbf{j} - 1\mathbf{k}) = 0$$

$$2\omega_y - \omega_z = 0 \qquad \textbf{[4]}$$

Solving Eqs. [1], [2], [3] and [4] yields

$$v_B = 1.875\text{ m/s} \qquad \textbf{Ans.}$$

$$\omega_x = 1.50\text{ rad/s} \qquad \omega_y = 0.225\text{ rad/s} \qquad \omega_z = 0.450\text{ rad/s}$$

© 2010 Pearson Education, Inc., Upper Saddle River, NJ. All rights reserved. This material is protected under all copyright laws as they currently exist. No portion of this material may be reproduced, in any form or by any means, without permission in writing from the publisher.

20–34. If the collar at A in Prob 20–33 has an acceleration of $\mathbf{a}_A = \{-2\mathbf{k}\}$ m/s^2 at the instant its velocity is $\mathbf{v}_A = \{-3\mathbf{k}\}$ m/s, determine the magnitude of the acceleration of the collar at B at this instant. Assume the angular velocity and angular acceleration are perpendicular to the rod.

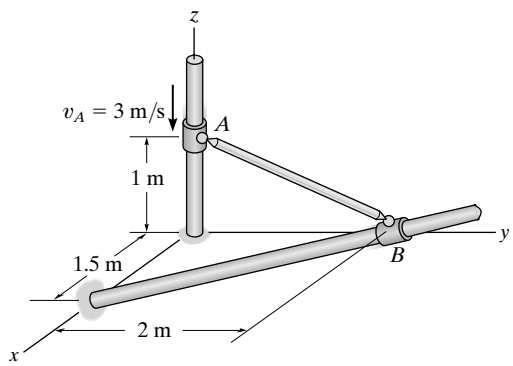

Velocity Equation: Here, $\mathbf{r}_{B/A} = \{(2-0)\mathbf{j} + (0-1)\,\mathbf{k}\}$ m $= \{2\mathbf{j} - 1\mathbf{k}\}$ m,

$\mathbf{v}_A = \{-3\mathbf{k}\}$ m/s, $\mathbf{v}_B = v_B\left[\dfrac{(0-1.5)\mathbf{i} + (2-0)\mathbf{j}}{\sqrt{(0-1.5)^2 + (2-0)^2}}\right] = -0.6\,v_B\,\mathbf{i} + 0.8\,v_B\,\mathbf{j}$ and

$\omega = \omega\,\mathbf{j} + \omega_z\,\mathbf{k}$. Applying Eq. 20–7, we have

$$\mathbf{v}_B = \mathbf{v}_A + \omega \times \mathbf{r}_{B/A}$$

$$-0.6v_B\,\mathbf{i} + 0.8\,v_B\,\mathbf{j} = -3\mathbf{k} + (\omega_x\mathbf{i} + \omega_y\,\mathbf{j} + \omega_z\,\mathbf{k}) \times (2\mathbf{j} - 1\mathbf{k})$$

$$-0.6\,v_B\,\mathbf{i} + 0.8\,v_B\,\mathbf{j} = (-3-\omega_y - 2\omega_z)\mathbf{i} + \omega_x\,\mathbf{j} + (2\,\omega_x - 3)\,\mathbf{k}$$

Equating $\mathbf{i}$, $\mathbf{j}$, and $\mathbf{k}$ components, we have

$$-0.6\,v_B = -3-\omega_y - 2\omega_z \qquad \textbf{[1]}$$

$$0.8\,v_B = \omega_x \qquad \textbf{[2]}$$

$$0 = 2\omega_x - 3 \qquad \textbf{[3]}$$

If ω is specified acting *perpendicular* to the axis of the rod AB, then

$$\omega \cdot \mathbf{r}_{B/A} = 0$$

$$\left(\omega_x\,\mathbf{i} + \omega_y\,\mathbf{j} + \omega_z\,\mathbf{k}\right)\cdot(2\mathbf{j} - 1\mathbf{k}) = 0$$

$$2\omega_y - \omega_z = 0 \qquad \textbf{[4]}$$

Solving Eqs. [1], [2], [3] and [4] yields

$$v_B = 1.875 \text{ m/s} \qquad \omega_x = 1.50 \text{ rad/s}$$

$$\omega_y = 0.225 \text{ rad/s} \qquad \omega_z = 0.450 \text{ rad/s}$$

Thus,

$$\omega = \{1.50\mathbf{i} + 0.225\mathbf{j} + 0.450\mathbf{k}\} \text{ rad/s}$$

© 2010 Pearson Education, Inc., Upper Saddle River, NJ. All rights reserved. This material is protected under all copyright laws as they currently exist. No portion of this material may be reproduced, in any form or by any means, without permission in writing from the publisher.

20–34. Continued

Acceleration Equation: With $\alpha = \alpha_x \mathbf{i} + \alpha_y \mathbf{j} + \alpha_z \mathbf{k}$ and the result obtained above, Applying Eq. 20–8, we have

$$\mathbf{a}_B = \mathbf{a}_A + \alpha \times \mathbf{r}_{B/A} + \omega \times (\omega \times \mathbf{r}_{B/A})$$

$$-0.6a_B \mathbf{i} + 0.8a_B \mathbf{j} = -2\mathbf{k} + \left(\alpha_x \mathbf{i} + \alpha_y \mathbf{j} + \alpha_z \mathbf{k}\right) \times (2\mathbf{j} - 1\mathbf{k})$$

$$+ (1.50\mathbf{i} + 0.225\mathbf{j} + 0.450\mathbf{k}) \times [(1.50\mathbf{i} + 0.225\mathbf{j} + 0.450\mathbf{k}) \times (2\mathbf{j} - 1\mathbf{k})]$$

$$-0.6a_B \mathbf{i} + 0.8a_B \mathbf{j} = \left(-\alpha_y - 2\alpha_z\right)\mathbf{i} + (\alpha_x - 5.00625)\mathbf{j} + (2\alpha_x + 0.503125)\mathbf{k}$$

Equating **i**, **j**, and **k** components. we have

$$-0.6a_B = -\alpha_y - 2\alpha_z \qquad \textbf{[5]}$$

$$0.8a_B = \alpha_y - 5.00625 \qquad \textbf{[6]}$$

$$0 = 2\alpha_y + 0.503125 \qquad \textbf{[7]}$$

Solving Eqs. [6] and [7] yields

$$\alpha_x = -0.2515 \text{ rad/s}^2$$

$$a_B = -6.57 \text{ m/s}^2 \qquad \textbf{Ans.}$$

Negative sign indicates that $\mathbf{a}_B$ is directed in the opposite direction to that of the above assumed direction

Note: In order to determine α_y and α_z. one should obtain another equation by pacifying the direction of α which acts *perpendicular* to the axis of rod AB.

© 2010 Pearson Education, Inc., Upper Saddle River, NJ. All rights reserved. This material is protected under all copyright laws as they currently exist. No portion of this material may be reproduced, in any form or by any means, without permission in writing from the publisher.

20–35. The triangular plate ABC is supported at A by a ball-and-socket joint and at C by the $x-z$ plane. The side AB lies in the $x-y$ plane. At the instant $\theta = 60°$, $\dot{\theta} = 2$ rad/s and point C has the coordinates shown. Determine the angular velocity of the plate and the velocity of point C at this instant.

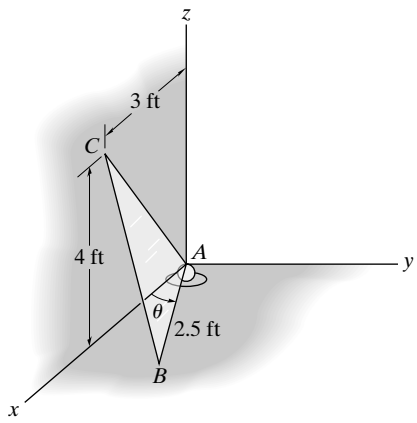

$$\mathbf{v}_B = -5 \sin 60°\mathbf{i} + 5 \cos 60°\mathbf{j}$$

$$= \{-4.33\mathbf{i} + 2.5\mathbf{j}\} \text{ ft/s}$$

$$\mathbf{v}_C = (v_C)_x\,\mathbf{i} + (v_C)_z\,\mathbf{k}$$

$$\mathbf{r}_{C/A} = \{3\mathbf{i} + 4\mathbf{k}\} \text{ ft}$$

$$\mathbf{r}_{B/A} = \{1.25\mathbf{i} + 2.165\mathbf{j}\} \text{ ft}$$

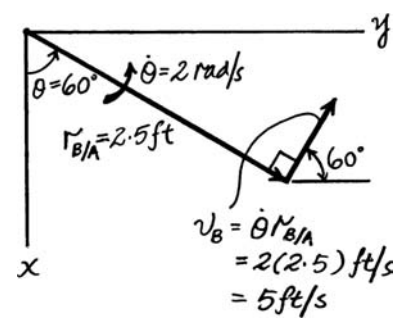

$$\mathbf{v}_B = \omega \times \mathbf{r}_{B/A}$$

$$-4.33\mathbf{i} + 2.5\mathbf{j} = \begin{vmatrix} \mathbf{i} & \mathbf{j} & \mathbf{k} \\ \omega_x & \omega_y & \omega_z \\ 1.25 & 2.165 & 0 \end{vmatrix}$$

$$-2.165\omega_z = -4.33\,; \qquad \omega_z = 2 \text{ rad/s}$$

$$2.165\omega_x - 1.25\omega_y = 0; \qquad \omega_y = 1.732\omega_x$$

$$\mathbf{v}_C = \omega \times \mathbf{r}_{C/A}$$

$$(v_C)_x\,\mathbf{i} + (v_C)_z\mathbf{k} = \begin{vmatrix} \mathbf{i} & \mathbf{j} & \mathbf{k} \\ \omega_x & \omega_y & 2 \\ 3 & 0 & 4 \end{vmatrix}$$

$$(v_C)_x = 4\omega_y$$

$$0 = 4\omega_x - 6; \qquad \omega_x = 1.5 \text{ rad/s}$$

$$(v_C)_z = -3\omega_y$$

Solving,

$$\omega_y = 2.5981 \text{ rad/s}$$

$$(v_C)_x = 10.392 \text{ ft/s}$$

$$(v_C)_z = -7.7942 \text{ ft/s}$$

Thus,

$$\omega = \{1.50\mathbf{i} + 2.60\mathbf{j} + 2.00\mathbf{k}\} \text{ rad/s} \qquad \textbf{Ans.}$$

$$\mathbf{v}_C = \{10.4\mathbf{i} - 7.79\mathbf{k}\} \text{ ft/s} \qquad \textbf{Ans.}$$

© 2010 Pearson Education, Inc., Upper Saddle River, NJ. All rights reserved. This material is protected under all copyright laws as they currently exist. No portion of this material may be reproduced, in any form or by any means, without permission in writing from the publisher.

***20–36.** The triangular plate ABC is supported at A by a ball-and-socket joint and at C by the $x-z$ plane. The side AB lies in the $x-y$ plane. At the instant $\theta = 60°$, $\dot{\theta} = 2$ rad/s, $\ddot{\theta} = 3$ rad/s^2 and point C has the coordinates shown. Determine the angular acceleration of the plate and the acceleration of point C at this instant.

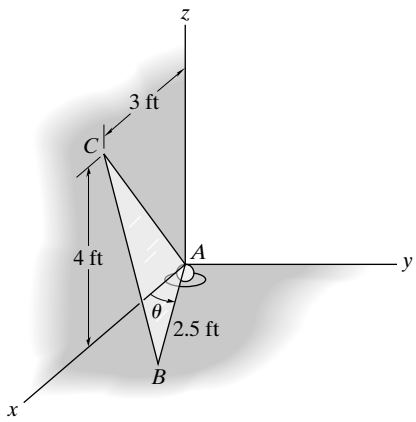

From Prob. 20–35.

$$\omega = 1.5\mathbf{i} + 2.5981\mathbf{j} + 2\mathbf{k}$$

$$\mathbf{r}_{B/A} = 1.25\mathbf{i} + 2.165\mathbf{j}$$

$$\mathbf{v}_B = -4.33\mathbf{i} + 2.5\mathbf{j}$$

$$(a_B)_t = 3(2.5) = 7.5 \text{ ft/s}^2$$

$$(a_B)_n = (2)^2(2.5) = 10 \text{ ft/s}^2$$

$$\mathbf{a}_B = -7.5 \sin 60°\mathbf{i} + 7.5 \cos 60°\mathbf{j} - 10 \cos 60°\mathbf{i} - 10 \sin 60°\mathbf{j}$$

$$\mathbf{a}_B = -11.4952\mathbf{i} - 4.91025\mathbf{j}$$

$$\mathbf{a}_B = \alpha \times \mathbf{r}_{B/A} + \omega \times \mathbf{v}_{B/A}$$

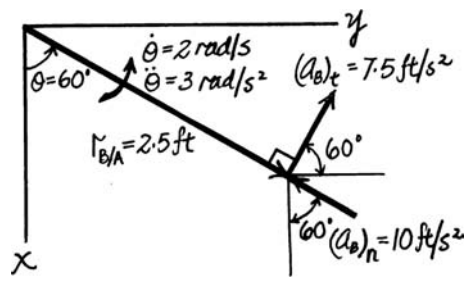

$$-11.4952\mathbf{i} - 4.91025\mathbf{j} = \begin{vmatrix} \mathbf{i} & \mathbf{j} & \mathbf{k} \\ \alpha_x & \alpha_y & \alpha_z \\ 1.25 & 2.165 & 0 \end{vmatrix} + \begin{vmatrix} \mathbf{i} & \mathbf{j} & \mathbf{k} \\ 1.5 & 2.5981 & 2 \\ -4.33 & 2.5 & 0 \end{vmatrix}$$

$$-11.4952 = -2.165\alpha_z - 5$$

$$-4.91025 = 1.25\alpha_z - 8.66$$

$$\alpha_z = 3 \text{ rad/s}^2$$

$$0 = 2.165\alpha_x - 1.25\alpha_y + 15 \qquad \textbf{(1)}$$

$$\mathbf{a}_C = \alpha \times \mathbf{r}_{C/A} + \omega \times \mathbf{v}_{C/A}$$

$$\mathbf{v}_{C/A} = 10.39\mathbf{i} - 7.794\mathbf{k}$$

$$\mathbf{a}_C = (a_C)_x\,\mathbf{i} + (a_C)_z\mathbf{k} = \begin{vmatrix} \mathbf{i} & \mathbf{j} & \mathbf{k} \\ \alpha_x & \alpha_y & \alpha_z \\ 3 & 0 & 4 \end{vmatrix} + \begin{vmatrix} \mathbf{i} & \mathbf{j} & \mathbf{k} \\ 1.5 & 2.5981 & 2 \\ 10.39 & 0 & -7.794 \end{vmatrix}$$

$$(a_C)_x = 4\alpha_y - 20.25 \qquad \textbf{(2)}$$

$$0 = 3\alpha_z - 4\alpha_x + 32.4760 \qquad \textbf{(3)}$$

$$(a_C)_z = -3\alpha_y - 27 \qquad \textbf{(4)}$$

Solving Eqs. (1)-(4),

$$\alpha_x = 10.369 \text{ rad/s}^2$$

$$\alpha_y = 29.96 \text{ rad/s}^2$$

$$(a_C)_x = 99.6 \text{ ft/s}^2$$

$$(a_C)_z = -117 \text{ ft/s}^2$$

$$\mathbf{a}_C = \{99.6\mathbf{i} - 117\mathbf{k}\}\text{ft/s}^2 \qquad \textbf{Ans.}$$

$$\alpha = \{10.4\mathbf{i} + 30.0\mathbf{j} + 3\mathbf{k}\} \text{ rad/s}^2 \qquad \textbf{Ans.}$$

© 2010 Pearson Education, Inc., Upper Saddle River, NJ. All rights reserved. This material is protected under all copyright laws as they currently exist. No portion of this material may be reproduced, in any form or by any means, without permission in writing from the publisher.

•20–37. Disk A rotates at a constant angular velocity of 10 rad/s. If rod BC is joined to the disk and a collar by ball-and-socket joints, determine the velocity of collar B at the instant shown. Also, what is the rod's angular velocity $\boldsymbol{\omega}_{BC}$ if it is directed perpendicular to the axis of the rod?

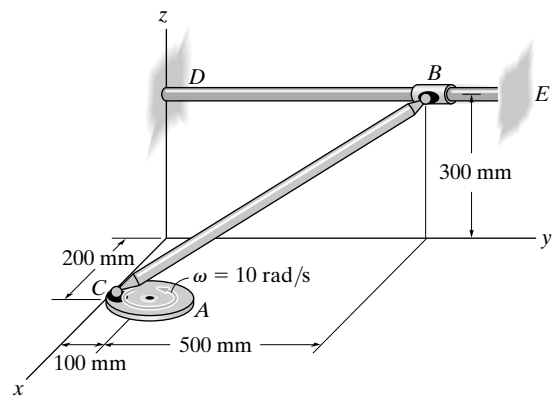

$\mathbf{v}_C = \{1\mathbf{i}\}$ m/s $\quad \mathbf{v}_B = -v_B\mathbf{j} \quad \omega_{BC} = \omega_x\,\mathbf{i} + \omega_y\,\mathbf{j} + \omega_z\,\mathbf{k}$

$$r_{B/C} = \{-0.2\mathbf{i} + 0.6\mathbf{j} + 0.3\mathbf{k}\}\text{ m}$$

$$\mathbf{v}_B = \mathbf{v}_C + \omega_{BC} \times \mathbf{r}_{B/C}$$

$$-\mathbf{v}_B = 1\mathbf{i} + \begin{vmatrix} \mathbf{i} & \mathbf{j} & \mathbf{k} \\ \omega_x & \omega_y & \omega_z \\ -0.2 & 0.6 & 0.3 \end{vmatrix}$$

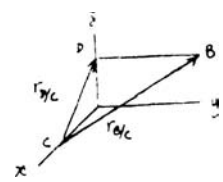

Equating $\mathbf{i}$, $\mathbf{j}$, and $\mathbf{k}$ components

$$1 - 0.3\omega_y - 0.6\omega_z = 0 \qquad \textbf{(1)}$$

$$0.3\omega_x + 0.2\omega_z = v_B \qquad \textbf{(2)}$$

$$0.6\omega_x + 0.2\omega_y = 0 \qquad \textbf{(3)}$$

Since ω_{BC} is perpendicular to the axis of the rod,

$$\omega_{BC} \quad \mathbf{r}_{B/C} = (\omega_x\,\mathbf{i} + \omega_y\,\mathbf{j} + \omega_z\mathbf{k})\cdot(-0.2\mathbf{i} + 0.6\mathbf{j} + 0.3\mathbf{k}) = 0$$

$$-0.2\omega_x + 0.6\omega_y + 0.3\omega_z = 0 \qquad \textbf{(4)}$$

Solving Eqs. (1) to (4) yields:

$\omega_x = 0.204$ rad/s $\quad \omega_y = -0.612$ rad/s $\quad \omega_z = 1.36$ rad/s $\quad v_B = 0.333$ m/s

Then

$$\omega_{BC} = \{0.204\mathbf{i} - 0.612\mathbf{j} + 1.36\mathbf{k}\}\text{ rad/s} \qquad \textbf{Ans.}$$

$$\mathbf{v}_B = \{-0.333\mathbf{j}\}\text{ m/s} \qquad \textbf{Ans.}$$

© 2010 Pearson Education, Inc., Upper Saddle River, NJ. All rights reserved. This material is protected under all copyright laws as they currently exist. No portion of this material may be reproduced, in any form or by any means, without permission in writing from the publisher.

20–38. Solve Prob. 20–37 if the connection at B consists of a pin as shown in the figure below, rather than a ball-and-socket joint. *Hint:* The constraint allows rotation of the rod both about bar DE (**j** direction) and about the axis of the pin (**n** direction). Since there is no rotational component in the **u** direction, i.e., perpendicular to **n** and **j** where $\mathbf{u} = \mathbf{j} \times \mathbf{n}$, an additional equation for solution can be obtained from $\boldsymbol{\omega} \cdot \mathbf{u} = 0$. The vector **n** is in the same direction as $\mathbf{r}_{B/C} \times \mathbf{r}_{D/C}$.

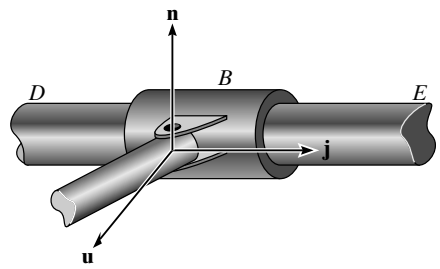

$\mathbf{v}_C = \{1\mathbf{i}\}$ m/s $\qquad \mathbf{v}_B = -v_B\mathbf{j} \qquad \omega_{BC} = \omega_x\,\mathbf{i} + \omega_y\,\mathbf{j} + \omega_z\,\mathbf{k}$

$$\mathbf{r}_{B/C} = \{-0.2\mathbf{i} + 0.6\mathbf{j} + 0.3\mathbf{k}\}\text{ m}$$

$$\mathbf{v}_B = \mathbf{v}_C + \omega_{BC} \times \mathbf{r}_{B/C}$$

$$-v_B\mathbf{j} = 1\mathbf{i} + \begin{vmatrix} \mathbf{i} & \mathbf{j} & \mathbf{k} \\ \omega_x & \omega_y & \omega_z \\ -0.2 & 0.6 & 0.3 \end{vmatrix}$$

Equating **i**, **j**, and **k** components

$$1 + 0.3\omega_x - 0.6\omega_z = 0 \qquad \textbf{(1)}$$

$$0.3\omega_x + 0.2\omega_z = v_B \qquad \textbf{(2)}$$

$$0.6\omega_x + 0.2\omega_z = 0 \qquad \textbf{(3)}$$

Also,

$$\mathbf{r}_{B/C} = \{-0.2\mathbf{i} + 0.6\mathbf{j} + 0.3\mathbf{k}\}\text{ m}$$

$$\mathbf{r}_{D/C} = \{-0.2\mathbf{i} + 0.3\mathbf{k}\}\text{ m}$$

$$\mathbf{r}_{B/C} \times \mathbf{r}_{D/C} = \begin{vmatrix} \mathbf{i} & \mathbf{j} & \mathbf{k} \\ -0.2 & 0.6 & 0.3 \\ -0.2 & 0 & 0.3 \end{vmatrix} = \{0.18\mathbf{i} + 0.12\mathbf{k}\}\text{ m}^2$$

$$\mathbf{n} = \frac{0.18\mathbf{i} + 0.12\mathbf{k}}{\sqrt{0.18^2 + 0.12^2}} = 0.8321\mathbf{i} + 0.5547\mathbf{k}$$

$$\mathbf{u} = \mathbf{j} \times \mathbf{n} = \mathbf{j} \times (0.8321\mathbf{i} + 0.5547\mathbf{k}) = 0.5547\mathbf{i} - 0.8321\mathbf{k}$$

$$\omega_{BC} \cdot \mathbf{u} = (\omega_x\,\mathbf{i} + \omega_y\,\mathbf{j} + \omega_z\mathbf{k}) \cdot (0.5547\mathbf{i} - 0.8321\mathbf{k}) = 0$$

$$0.5547\omega_x - 0.8321\omega_z = 0 \qquad \textbf{(4)}$$

Solving Eqs. (1) to (4) yields:

$\omega_x = 0.769$ rad/s $\qquad \omega_y = -2.31$ rad/s $\qquad \omega_z = 0.513$ rad/s $\qquad v_B = 0.333$ m/s

Then

$$\omega_{BC} = \{0.769\mathbf{i} - 2.31\mathbf{j} + 0.513\mathbf{k}\}\text{ rad/s} \qquad \textbf{Ans.}$$

$$\mathbf{v}_B = \{-0.333\mathbf{j}\}\text{ m/s} \qquad \textbf{Ans.}$$

© 2010 Pearson Education, Inc., Upper Saddle River, NJ. All rights reserved. This material is protected under all copyright laws as they currently exist. No portion of this material may be reproduced, in any form or by any means, without permission in writing from the publisher.

20–39. Solve Example 20–5 such that the x, y, z axes move with curvilinear translation, $\mathbf{\Omega} = \mathbf{0}$ in which case the collar appears to have both an angular velocity $\mathbf{\Omega}_{xyz} = \boldsymbol{\omega}_1 + \boldsymbol{\omega}_2$ and radial motion.

Relative to XYZ, let xyz have

$$\Omega = 0 \qquad \dot{\Omega} = 0$$

$$\mathbf{r}_B = \{-0.5\mathbf{k}\}\ \text{m}$$

$$\mathbf{v}_B = \{2\mathbf{j}\}\ \text{m/s}$$

$$\mathbf{a}_B = \{0.75\mathbf{j} + 8\mathbf{k}\}\ \text{m/s}^2$$

Relative to xyz, let $x'\ y'\ z'$ be coincident with xyz and be fixed to BD. Then

$$\Omega_{xyz} = \omega_1 + \omega_2 = \{4\mathbf{i} + 5\mathbf{k}\}\ \text{rad/s} \qquad \dot{\omega}_{xyz} = \dot{\omega}_1 + \dot{\omega}_2 = \{1.5\mathbf{i} - 6\mathbf{k}\}\ \text{rad/s}^2$$

$$(\mathbf{r}_{C/B})_{xyz} = \{0.2\mathbf{j}\}\ \text{m}$$

$$(\mathbf{v}_{C/B})_{xyz} = (\dot{\mathbf{r}}_{C/B})_{xyz} = (\dot{\mathbf{r}}_{C/B})_{x'y'z'} + (\omega_1 + \omega_2) \times (\mathbf{r}_{C/B})_{xyz}$$

$$= 3\mathbf{j} + (4\mathbf{i} + 5\mathbf{k}) \times (0.2\mathbf{j})$$

$$= \{-1\mathbf{i} + 3\mathbf{j} + 0.8\mathbf{k}\}\ \text{m/s}$$

$$(\mathbf{a}_{C/B})_{xyz} = (\ddot{\mathbf{r}}_{C/B})_{xyz} = \left[(\ddot{\mathbf{r}}_{C/B})_{x'y'z'} + (\omega_1 + \omega_2) \times (\dot{\mathbf{r}}_{C/B})_{x'y'z'}\right]$$

$$+\left[(\dot{\omega}_1 + \dot{\omega}_2) \times (\mathbf{r}_{C/B})_{xyz}\right] + \left[(\omega_1 + \omega_2) \times (\dot{\mathbf{r}}_{C/B})_{xyz}\right]$$

$$(\mathbf{a}_{C/B})_{xyz} = \left[2\mathbf{j} + (4\mathbf{i} + 5\mathbf{k}) \times 3\mathbf{j}\right] + \left[(1.5\mathbf{i} - 6\mathbf{k}) \times 0.2\mathbf{j}\right] + \left[(4\mathbf{i} + 5\mathbf{k}) \times (-1\mathbf{i} + 3\mathbf{j} + 0.8\mathbf{k})\right]$$

$$= \{-28.8\mathbf{i} - 6.2\mathbf{j} + 24.3\mathbf{k}\}\ \text{m/s}^2$$

$$\mathbf{v}_C = \mathbf{v}_B + \Omega \times \mathbf{r}_{C/B} + (\mathbf{v}_{C/B})_{xyz}$$

$$= 2\mathbf{j} + 0 + (-1\mathbf{i} + 3\mathbf{j} + 0.8\mathbf{k})$$

$$= \{-1.00\mathbf{i} + 5.00\mathbf{j} + 0.800\mathbf{k}\}\ \text{m/s} \qquad \textbf{Ans.}$$

$$\mathbf{a}_C = \mathbf{a}_B + \Omega \times \mathbf{r}_{C/B} + \Omega \times (\Omega \times \mathbf{r}_{C/B}) + 2\Omega \times (\mathbf{v}_{C/B})_{xyz} + (\mathbf{a}_{C/B})_{xyz}$$

$$= (0.75\mathbf{j} + 8\mathbf{k}) + \mathbf{0} + \mathbf{0} + \mathbf{0} + (-28.8\mathbf{i} - 6.2\mathbf{j} + 24.3\mathbf{k})$$

$$= \{-28.8\mathbf{i} - 5.45\mathbf{j} + 32.3\mathbf{k}\}\ \text{m/s}^2 \qquad \textbf{Ans.}$$

© 2010 Pearson Education, Inc., Upper Saddle River, NJ. All rights reserved. This material is protected under all copyright laws as they currently exist. No portion of this material may be reproduced, in any form or by any means, without permission in writing from the publisher.

***20–40.** Solve Example 20–5 by fixing x, y, z axes to rod BD so that $\mathbf{\Omega} = \boldsymbol{\omega}_1 + \boldsymbol{\omega}_2$. In this case the collar appears only to move radially outward along BD; hence $\mathbf{\Omega}_{xyz} = \mathbf{0}$.

Relative to XYZ, let $x'\ y'\ z'$ be concident with XYZ and have $\Omega' = \omega_1$ and $\dot{\Omega}' = \dot{\omega}_1$

$$\dot{\omega} = \dot{\omega}_1 + \dot{\omega}_2 = \{4\mathbf{i} + 5\mathbf{k}\}\ \text{rad/s}$$

$$\dot{\omega} = \dot{\omega}_1 + \dot{\omega}_2 = \left[\left(\dot{\omega}_1\right)_{x'y'z'} + \omega_1 \times \omega_1\right] + \left[\left(\omega_2\right)_{x'y'z'} + \omega_1 \times \omega_2\right]$$
$$= (1.5\mathbf{i} + \mathbf{0}) + \left[-6\mathbf{k} + (4\mathbf{i}) \times (5\mathbf{k})\right] = \{1.5\mathbf{i} - 20\mathbf{j} - 6\mathbf{k}\}\ \text{rad/s}^2$$

$$\mathbf{r}_B = \{-0.5\mathbf{k}\}\ \text{m}$$

$$\mathbf{v}_B = \dot{\mathbf{r}}_B = \left(\dot{\mathbf{r}}_B\right)_{x'y'z'} + \omega_1 \times \mathbf{r}_B = \mathbf{0} + (4\mathbf{i}) \times (-0.5\mathbf{k}) = \{2\mathbf{j}\}\ \text{m/s}$$

$$\mathbf{a}_B = \dot{\mathbf{r}}_B = \left[\left(\ddot{\mathbf{r}}_B\right)_{x'y'z'} + \omega_1 \times \left(\dot{\mathbf{r}}_\mathbf{B}\right)_{x'y'z'}\right] + \dot{\omega}_1 \times r_B + \omega_1 \times \dot{\mathbf{r}}_B$$
$$= \mathbf{0} + \mathbf{0} + \left[(1.5\mathbf{i}) \times (-0.5\mathbf{k})\right] + (4\mathbf{i} \times 2\mathbf{j}) = \{0.75\mathbf{j} + 8\mathbf{k}\}\ \text{m/s}^2$$

Relative to $x'y'z'$, let xyz have

$$\Omega_{x'y'z'} = \mathbf{0}; \qquad \dot{\Omega}_{x'y'z'} = \mathbf{0};$$
$$\left(r_{C/B}\right)_{xyz} = \{0.2\mathbf{j}\}\ \text{m}$$
$$(\mathbf{v}_{C/B})_{xyz} = \{3\mathbf{j}\}\ \text{m/s}$$
$$(\mathbf{a}_{C/B})_{xyz} = \{2\mathbf{j}\}\ \text{m/s}^2$$
$$\mathbf{v}_C = \mathbf{v}_B + \Omega \times \mathbf{r}_{C/B} + (\mathbf{v}_{C/B})_{xyz}$$
$$= 2\mathbf{j} + \left[(4\mathbf{i} + 5\mathbf{k}) \times (0.2\mathbf{j})\right] + 3\mathbf{j}$$
$$= \{-1\mathbf{i} + 5\mathbf{j} + 0.8\mathbf{k}\}\text{m/s} \qquad \textbf{Ans.}$$

$$\mathbf{a}_C = \mathbf{a}_B + \Omega \times \mathbf{r}_{C/B} + \Omega \times (\Omega \times \mathbf{r}_{C/B}) + 2\Omega \times (\mathbf{v}_{C/B})_{xyz} + (\mathbf{a}_{C/B})_{xyz}$$
$$= (0.75\mathbf{j} + 8\mathbf{k}) + \left[(1.5\mathbf{i} - 20\mathbf{j} - 6\mathbf{k}) \times (0.2\mathbf{j})\right] + (4\mathbf{i} + 5\mathbf{k}) \times \left[(4\mathbf{i} + 5\mathbf{k}) \times (0.2\mathbf{j})\right] + 2\left[(4\mathbf{i} + 5\mathbf{k}) \times (3\mathbf{j})\right] + 2\mathbf{j}$$

$$\mathbf{a}_C = \{-28.2\mathbf{i} - 5.45\mathbf{j} + 32.3\mathbf{k}\}\ \text{m/s}^2 \qquad \textbf{Ans.}$$

© 2010 Pearson Education, Inc., Upper Saddle River, NJ. All rights reserved. This material is protected under all copyright laws as they currently exist. No portion of this material may be reproduced, in any form or by any means, without permission in writing from the publisher.

•20–41. At the instant shown, the shaft rotates with an angular velocity of $\omega_p = 6$ rad/s and has an angular acceleration of $\dot{\omega}_p = 3$ rad/s^2. At the same instant, the disk spins about its axle with an angular velocity of $\omega_s = 12$ rad/s, increasing at a constant rate of $\dot{\omega}_s = 6$ rad/s^2. Determine the velocity of point C located on the rim of the disk at this instant.

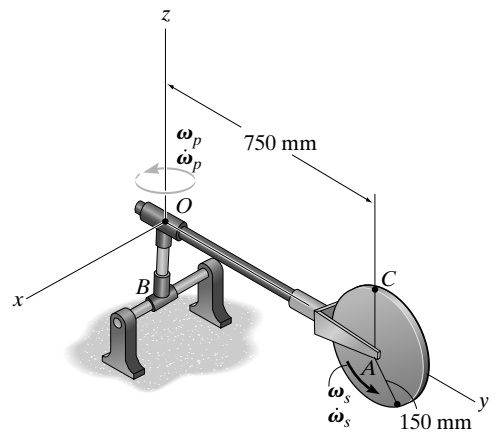

The xyz rotating frame is set parallel to the fixed XYZ frame with its origin attached to point A, Fig. a. The angular velocity and angular acceleration of this frame with respect to the XYZ frame are

$$\Omega = \omega_p = [6\mathbf{k}] \text{ rad/s} \qquad \dot{\omega} = \dot{\omega}_p = [3\mathbf{k}] \text{ rad/s}^2$$

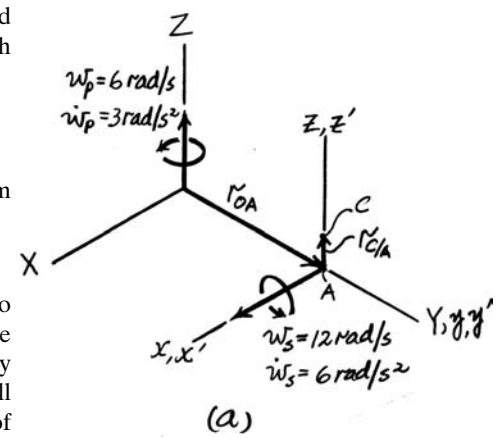

Since point A rotates about a fixed axis (Z axis), its motion can be determined from

$$\mathbf{v}_A = \omega_P \times \mathbf{r}_{OA} = (6\mathbf{k}) \times (0.75\mathbf{j}) = [-4.5\mathbf{i}] \text{ m/s}$$

In order to determine the motion of point C relative to point A, it is necessary to establish a second $x'y'z'$ rotating frame that coincides with the xyz frame at the instant considered, Fig. a. If we set the $x'y'z'$ frame to have an angular velocity relative to the xyz frame of $\Omega' = \omega_S = [12\mathbf{i}]$ rad/s, the direction of $(\mathbf{r}_{C/A})_{xyz}$ will remain unchanged with respect to the $x'y'z'$ frame. Taking the time derivative of $(\mathbf{r}_{C/A})_{xyz}$,

$$\begin{aligned}(\mathbf{v}_{C/A})_{xyz} = (\dot{\mathbf{r}}_{C/A})_{xyz} &= \left[(\dot{\mathbf{r}}_{C/A})_{x'y'z'} + \omega_s \times (\mathbf{r}_{C/A})_{xyz}\right] \\ &= 0 + (12\mathbf{i}) \times (0.15\mathbf{k}) \\ &= [-1.8\mathbf{j}] \text{ m/s}\end{aligned}$$

Thus,

$$\begin{aligned}\mathbf{v}_C &= \mathbf{v}_A + \Omega \times \mathbf{r}_{C/A} + (\mathbf{v}_{C/A})_{xyz} \\ &= (-4.5\mathbf{i}) + 6\mathbf{k} \times 0.15\mathbf{k} + (-1.8\mathbf{j}) \\ &= [-4.5\mathbf{i} - 1.8\mathbf{j}] \text{ m/s} \qquad \textbf{Ans.}\end{aligned}$$

© 2010 Pearson Education, Inc., Upper Saddle River, NJ. All rights reserved. This material is protected under all copyright laws as they currently exist. No portion of this material may be reproduced, in any form or by any means, without permission in writing from the publisher.

20–42. At the instant shown, the shaft rotates with an angular velocity of $\omega_p = 6$ rad/s and has an angular acceleration of $\dot{\omega}_p = 3$ rad/s^2. At the same instant, the disk spins about its axle with an angular velocity of $\omega_s = 12$ rad/s, increasing at a constant rate of $\dot{\omega}_s = 6$ rad/s^2. Determine the acceleration of point C located on the rim of the disk at this instant.

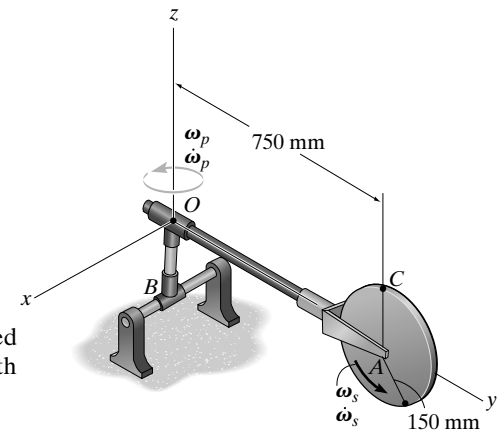

The xyz rotating frame is set parallel to the fixed XYZ frame with its origin attached to point A, Fig. a. The angular velocity and angular acceleration of this frame with respect to the XYZ frame are

$$\Omega = \omega_p = [6\mathbf{k}] \text{ rad/s} \qquad \dot{\omega} = \dot{\Omega}_p = [3\mathbf{k}] \text{ rad/s}^2$$

Since point A rotates about a fixed axis (Z axis), its motion can be determined from

$$\mathbf{v}_A = \omega_p \times \mathbf{r}_{OA} = (6\mathbf{k}) \times (0.75\mathbf{j}) = [-4.5\mathbf{i}] \text{ m/s}$$

$$a_A = \dot{\omega}_p \times \mathbf{r}_{OA} + \omega_p \times \left(\omega_p \times \mathbf{r}_{OA}\right)$$

$$= (3\mathbf{k}) \times (0.75\mathbf{j}) + 6\mathbf{k} \times [6\mathbf{k} \times 0.75\mathbf{j}]$$

$$= [-2.25\mathbf{i} - 27\mathbf{j}] \text{ m/s}^2$$

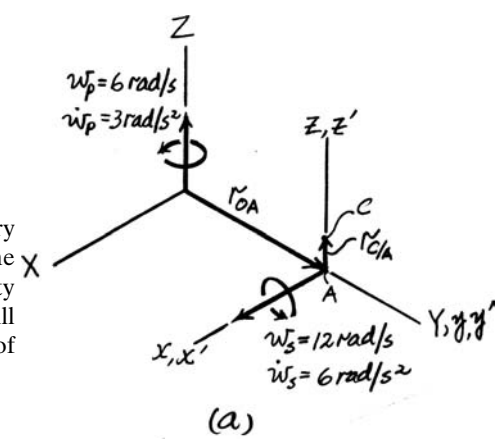

In order to determine the motion of the point C relative to point A, it is neccessary to establish a second $x'y'z'$ rotating frame that coincides with the xyz frame at the instant considered, Fig. a. If we set the $x'y'z'$ frame to have an angular velocity relative to the xyz frame of $\Omega' = \omega_s = [12\mathbf{i}]$ rad/s, the direction of $(\mathbf{r}_{C/A})_{xyz}$ will remain unchanged with respect to the $x'y'z'$ frame. Taking the time derivative of $(\mathbf{r}_{C/A})_{xyz}$,

$$(\mathbf{v}_{C/A})_{xyz} = (\dot{\mathbf{r}}_{C/A})_{xyz} = \left[(\dot{\mathbf{r}}_{C/A})_{x'y'z'} + \omega_S \times (\mathbf{r}_{C/A})_{xyz}\right]$$

$$= 0 + (12\mathbf{i}) \times (0.15\mathbf{k})$$

$$= [-1.8\mathbf{j}] \text{ m/s}$$

Since $\Omega' = \omega_s$ has a constant direction with respect to the xyz frame, then $\dot{\Omega} = \dot{\omega}_s = [6\mathbf{i}]$ rad/s^2. Taking the time derivative of $(\dot{\mathbf{r}}_{C/A})_{xyz}$,

$$(\mathbf{a}_{C/A}) = (\ddot{\mathbf{r}}_{C/A})_{xyz} = \left[(\ddot{\mathbf{r}}_{C/A})_{x'y'z'} + \omega_s \times (\dot{\mathbf{r}}_{C/A})_{x'y'z'}\right] + \dot{\omega}_s \times (\mathbf{r}_{C/A})_{xyz} + \omega_s \times (\dot{r}_{C/A})_{xyz}$$

$$= [0 + 0] + (6\mathbf{i}) \times (0.15\mathbf{k}) + (12\mathbf{i}) \times (-1.8\mathbf{j})$$

$$= [-0.9\mathbf{j} - 21.6\mathbf{k}] \text{ m/s}^2$$

Thus,

$$\mathbf{a}_C = \mathbf{a}_A + \dot{\Omega} \times \mathbf{r}_{C/A} + \Omega \times (\Omega \times \mathbf{r}_{C/A}) + 2\Omega \times (\mathbf{v}_{C/A})_{xyz} + (\mathbf{a}_{C/A})_{xyz}$$

$$= (-2.25\mathbf{i} - 27\mathbf{j}) + 3\mathbf{k} \times 0.15\mathbf{k} + 6\mathbf{k} \times (6\mathbf{k} \times 0.15\mathbf{k}) + 2(6\mathbf{k}) \times (-1.8\mathbf{j}) + (-0.9\mathbf{j} - 21.6\mathbf{k})$$

$$= [19.35\mathbf{i} - 27.9\mathbf{j} - 21.6\mathbf{k}] \text{m/s}^2 \qquad \textbf{Ans.}$$

© 2010 Pearson Education, Inc., Upper Saddle River, NJ. All rights reserved. This material is protected under all copyright laws as they currently exist. No portion of this material may be reproduced, in any form or by any means, without permission in writing from the publisher.

20–43. At the instant shown, the cab of the excavator rotates about the z axis with a constant angular velocity of $\omega_z = 0.3$ rad/s. At the same instant $\theta = 60°$, and the boom OBC has an angular velocity of $\dot{\theta} = 0.6$ rad/s, which is increasing at $\ddot{\theta} = 0.2$ rad/s^2, both measured relative to the cab. Determine the velocity and acceleration of point C on the grapple at this instant.

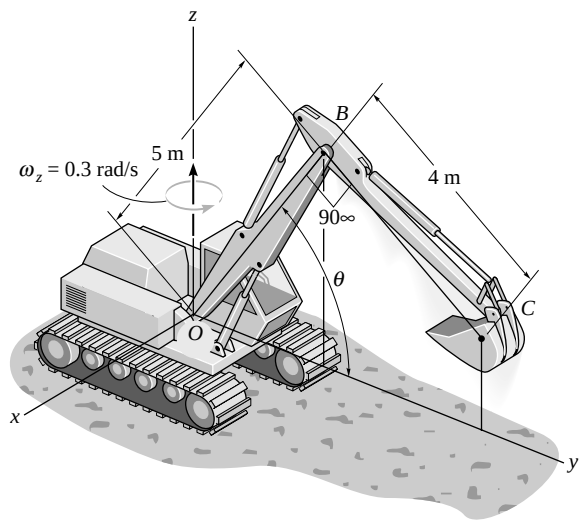

Relative to XYZ, let xyz have

$\Omega = \{0.3\mathbf{k}\}$ rad/s, $\quad \dot{\omega} = \mathbf{0}$ (Ω does not change direction relative to XYZ.)

$$\mathbf{r}_O = \mathbf{0}, \qquad \mathbf{v}_O = \mathbf{0}, \qquad \mathbf{a}_O = \mathbf{0}$$

Relative to xyz, let $x'y'z'$ be coincident with xyz at O and have

$\Omega_{xyz} = \{0.6\mathbf{i}\}$ rad/s, $\quad \dot{\Omega}_{xyz} = \{0.2\mathbf{i}\}$ rad/s^2 (Ω_{xyz} does not change direction relative to XYZ.)

$(\mathbf{r}_{C/O})_{xyz} = (5\cos 60° + 4\cos 30°)\mathbf{j} + (5\sin 60° - 4\sin 30°)\mathbf{k} = \{5.9641\mathbf{j} + 2.3301\mathbf{k}\}$ m

$(\mathbf{r}_{C/O})_{xyz}$ change direction relative to XYZ.)

$$(\mathbf{v}_{C/O})_{xyz} = \left(\dot{\mathbf{r}}_{C/O}\right)_{xyz} = \left(\dot{\mathbf{r}}_{C/O}\right)_{x'y'z'} + \Omega_{xyz} \times \left(\mathbf{r}_{C/O}\right)_{xyz}$$

$$= \mathbf{0} + (0.6\mathbf{i}) \times (5.9641\mathbf{j} + 2.3301\mathbf{k}) = \{-1.3981\mathbf{j} + 3.5785\mathbf{k}\} \text{ m/s}$$

$$(\mathbf{a}_{C/O})_{xyz} = \left(\ddot{\mathbf{r}}_{C/O}\right)_{xyz} = \left[\left(\ddot{\mathbf{r}}_{C/O}\right)_{x'y'z'} + \Omega_{xyz} \times \left(\dot{\mathbf{r}}_{C/O}\right)_{x'y'z'}\right] + \dot{\Omega}_{xyz} \times \dot{\mathbf{r}}_{C/O} + \Omega_{xyz} \times \dot{\mathbf{r}}_{C/O}$$

$$= \left[\mathbf{0} + \mathbf{0}\right] + (0.2\mathbf{i}) \times (5.9641\mathbf{j} + 2.3301\mathbf{k}) + (0.6\mathbf{i}) \times (-1.3981\mathbf{j} + 3.5785\mathbf{k})$$

$$= \{-2.61310\mathbf{j} + 0.35397\mathbf{k}\} \text{ m/s}^2$$

Thus,

$$\mathbf{v}_C = \mathbf{v}_O + \Omega \times \mathbf{r}_{C/O} + (\mathbf{v}_{C/O})_{xyz} = \mathbf{0} + (0.3\mathbf{k}) \times (5.9641\mathbf{j} + 2.3301\mathbf{k}) - 1.3981\mathbf{j} + 3.5785\mathbf{k}$$

$$= \{-1.79\mathbf{i} - 1.40\mathbf{j} + 3.58\mathbf{k}\} \text{ m/s} \qquad \textbf{Ans.}$$

$$\mathbf{a}_C = \mathbf{a}_O + \dot{\Omega} \times \mathbf{r}_{C/O} + \Omega \times \left(\Omega \times \mathbf{r}_{C/O}\right) + 2\Omega \times (\mathbf{v}_{C/O})_{xyz} + (\mathbf{a}_{C/O})_{xyz}$$

$$= \mathbf{0} + \mathbf{0} + (0.3\mathbf{k}) \times \left[(0.3\mathbf{k}) \times (5.9641\mathbf{j} + 2.3301\mathbf{k})\right]$$

$$+ 2(0.3k) \times (-1.3981\mathbf{j} + 3.5785\mathbf{k}) - 2.61310\mathbf{j} + 0.35397\mathbf{k}$$

$$= \{0.839\mathbf{i} - 3.15\mathbf{j} + 0.354\mathbf{k}\} \text{ m/s}^2 \qquad \textbf{Ans.}$$

© 2010 Pearson Education, Inc., Upper Saddle River, NJ. All rights reserved. This material is protected under all copyright laws as they currently exist. No portion of this material may be reproduced, in any form or by any means, without permission in writing from the publisher.

***20–44.** At the instant shown, the frame of the excavator travels forward in the y direction with a velocity of 2 m/s and an acceleration of 1 m/s^2, while the cab rotates about the z axis with an angular velocity of $\omega_z = 0.3$ rad/s, which is increasing at $\alpha_z = 0.4$ rad/s^2. At the same instant $\theta = 60°$, and the boom OBC has an angular velocity of $\dot{\theta} = 0.6$ rad/s, which is increasing at $\ddot{\theta} = 0.2$ rad/s^2, both measured relative to the cab. Determine the velocity and acceleration of point C on the grapple at this instant.

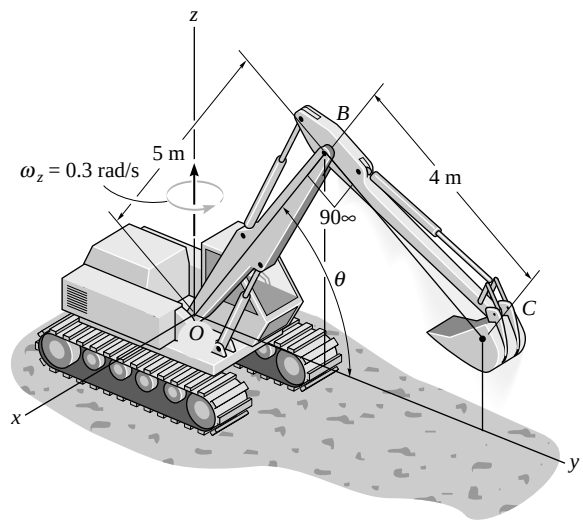

Relative to XYZ, let xyz have

$\Omega = \{0.3\mathbf{k}\}$ rad/s, $\dot{\omega} = \{0.4\mathbf{k}\}$ rad/s^2 (Ω does not change direction relative to XYZ.)

$\mathbf{r}_O = \mathbf{0}$ (r_o does not change direction relative to XYZ.)

$$\mathbf{v}_O = \{2\mathbf{j}\}\ \text{m/s}$$

$$\mathbf{a}_O = \{1\mathbf{j}\}\ \text{m/s}^2$$

Relative to xyz, let $x'y'z'$ have

$\Omega_{xyz} = \{0.6\mathbf{i}\}$ rad/s, $\dot{\omega}_{xyz} = \{0.2\mathbf{i}\}$ rad/s^2 (Ω_{xyz} does not change direction relative to xyz.)

$(\mathbf{r}_{C/O})_{xyz} = (5\cos 60° + 4\cos 30°)\mathbf{j} + (5\sin 60° - 4\sin 30°)\mathbf{k} = \{5.9641\mathbf{j} + 2.3301\mathbf{k}\}$ m

($(\mathbf{r}_{C/O})_{xyz}$ change direction relative to xyz.)

$$(\mathbf{v}_{C/O})_{xyz} = \left(\dot{\mathbf{r}}_{C/O}\right)_{xyz} = \left(\dot{\mathbf{r}}_{C/O}\right)_{x'y'z'} + \Omega_{xyz} \times \left(\mathbf{r}_{C/O}\right)_{xyz}$$

$$= 0 + (0.6\mathbf{i}) \times (5.9641\mathbf{j} + 2.3301\mathbf{k}) = \{-1.3981\mathbf{j} + 3.5785\mathbf{k}\}\ \text{m/s}$$

$$(\mathbf{a}_{C/O})_{xyz} = \left(\ddot{\mathbf{r}}_{C/O}\right)_{xyz} = \left[\left(\ddot{\mathbf{r}}_{C/O}\right)_{x'y'z'} + \Omega_{xyz} \times \left(\dot{\mathbf{r}}_{C/O}\right)_{x'y'z'}\right] + \Omega_{xyz} \times \left(\mathbf{r}_{C/O}\right)_{xyz} + \Omega_{xyz} \times \left(\dot{\mathbf{r}}_{C/O}\right)_{xyz}$$

$$= \left[\mathbf{0} + \mathbf{0}\right] + (0.2\mathbf{i}) \times (5.9641\mathbf{j} + 2.3301\mathbf{k}) + (0.6\mathbf{i}) \times (-1.3981\mathbf{j} + 3.5785\mathbf{k})$$

$$= \{-2.61310\mathbf{j} + 0.35397\mathbf{k}\}\ \text{m/s}^2$$

Thus,

$$\mathbf{v}_C = \mathbf{v}_O + \Omega \times \mathbf{r}_{C/O} + (\mathbf{v}_{C/O})_{xyz} = 2\mathbf{j} + (0.3\mathbf{k}) \times (5.9641\mathbf{j} + 2.3301\mathbf{k}) - 1.3981\mathbf{j} + 3.5785\mathbf{k}$$

$$= \{-1.79\mathbf{i} + 0.602\mathbf{j} + 3.58\mathbf{k}\}\ \text{m/s} \qquad \textbf{Ans.}$$

$$\mathbf{a}_C = \mathbf{a}_O + \dot{\Omega} \times \mathbf{r}_{C/O} + \Omega \times \left(\Omega \times \mathbf{r}_{C/O}\right) + 2\Omega \times (\mathbf{v}_{C/O})_{xyz} + (\mathbf{a}_{C/O})_{xyz}$$

$$= 1\mathbf{j} + 0.4\mathbf{k} \times (5.9641\mathbf{j} + 2.3301\mathbf{k}) + (0.3\mathbf{k}) \times \left[(0.3\mathbf{k}) \times (5.9641\mathbf{j} + 2.3301\mathbf{k})\right]$$

$$+ 2(0.3\mathbf{k}) \times (-1.3981\mathbf{j} + 3.5785\mathbf{k}) - 2.61310\mathbf{j} + 0.35397\mathbf{k}$$

$$= \{-1.55\mathbf{i} - 2.15\mathbf{j} + 0.354\mathbf{k}\}\ \text{m/s}^2 \qquad \textbf{Ans.}$$

© 2010 Pearson Education, Inc., Upper Saddle River, NJ. All rights reserved. This material is protected under all copyright laws as they currently exist. No portion of this material may be reproduced, in any form or by any means, without permission in writing from the publisher.

•20–45. The crane rotates about the z axis with a constant rate $\omega_1 = 0.6$ rad/s, while the boom rotates downward with a constant rate $\omega_2 = 0.2$ rad/s. Determine the velocity and acceleration of point A located at the end of the boom at the instant shown.

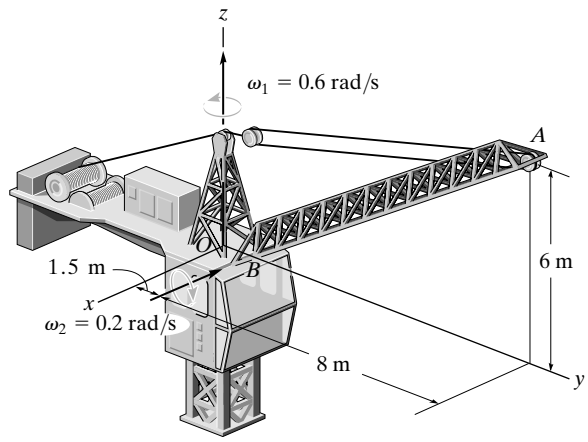

Coordinate Axes: The rotating x, y, z frame and fixed X, Y, Z frame are set with the origin at point B and O respectively.

Motion of *B*: Here, $\mathbf{r}_B$ changes direction with respect to X, Y, Z frame. The time derivatives of $\mathbf{r}_B$ can be found by setting another set of coordinate axis x', y', z', coincident with X, Y, Z rotating at $\Omega = \omega_1 = \{0.6\mathbf{k}\}$ rad/s and $\Omega' = \dot{\omega}_1 = \mathbf{0}$. Here, $\mathbf{r}_B = \{1.5\mathbf{j}\}$ m

$$\mathbf{v}_B = \dot{\mathbf{r}}_B = (\dot{\mathbf{r}}_B)_{x'y'z'} + \Omega' \times \mathbf{r}_B = \mathbf{0} + 0.6\mathbf{k} \times 1.5\mathbf{j} = \{-0.9\mathbf{i}\}\ \text{m/s}$$

$$\mathbf{a}_B = \ddot{\mathbf{r}}_B = \left[(\ddot{\mathbf{r}}_B)_{x'y'z'} + \Omega' \times (\dot{\mathbf{r}}_B)_{x'y'z'}\right] + \dot{\Omega}' \times \mathbf{r}_B + \Omega' \times \dot{\mathbf{r}}_B$$

$$= (\mathbf{0} + \mathbf{0}) + \mathbf{0} + 0.6\mathbf{k} \times (-0.9\mathbf{i}) = \{-0.540\mathbf{j}\}\ \text{m/s}^2$$

Motion of *A* with Respect to *B*: Let xyz axis rotate at $\Omega_{xyz} = \omega_2 = \{-0.2\mathbf{i}\}$ rad/s and $\dot{\Omega}_{xyz} = \dot{\omega}_2 = \mathbf{0}$. Here, $\mathbf{r}_{A/B} = \{8\mathbf{j} + 6\mathbf{k}\}$ m.

$$(\mathbf{v}_{A/B})_{xyz} = \dot{\mathbf{r}}_{A/B} = (\dot{\mathbf{r}}_{A/B})_{xyz} + \Omega_{xyz} \times \mathbf{r}_{A/B} = \mathbf{0} + (-0.2\mathbf{i}) \times (8\mathbf{j} + 6\mathbf{k}) = \{1.20\mathbf{j} - 1.60\mathbf{k}\}\ \text{m/s}$$

$$(\mathbf{a}_{A/B})_{xyz} = \ddot{\mathbf{r}}_{A/B} = \left[(\ddot{\mathbf{r}}_{A/B})_{xyz} + \Omega_{xyz} \times (\dot{\mathbf{r}}_{A/B})_{xyz}\right] + \dot{\Omega}_{xyz} \times \mathbf{r}_{A/B} + \Omega_{xyz} \times \dot{\mathbf{r}}_{A/B}$$

$$= \mathbf{0} + \mathbf{0} + \mathbf{0} + (-0.2\mathbf{i}) \times (1.20\mathbf{j} - 1.60\mathbf{k})$$

$$= \{-0.320\mathbf{j} - 0.240\mathbf{k}\}\ \text{m/s}^2$$

Motion of Point *A*: Here, $\Omega = \omega_1 = \{0.6\mathbf{k}\}$ rad/s and $\dot{\omega} = \dot{\omega}_1 = \mathbf{0}$. Applying Eqs. 20–11 and 20-12, we have

$$\mathbf{v}_A = \mathbf{v}_B + \Omega \times \mathbf{r}_{A/B} + (\mathbf{v}_{A/B})_{xyz} = (-0.9\mathbf{i}) + 0.6\mathbf{k} \times (8\mathbf{j} + 6\mathbf{k}) + (1.20\mathbf{j} - 1.60\mathbf{k})$$

$$= \{-5.70\mathbf{i} + 1.20\mathbf{j} - 1.60\mathbf{k}\}\text{m/s} \qquad \textbf{Ans.}$$

$$\mathbf{a}_A = \mathbf{a}_B + \dot{\Omega} \times \mathbf{r}_{AB} + \Omega \times (\Omega \times \mathbf{r}_{A/B}) + 2\Omega \times (\mathbf{v}_{A/B})_{xyz} + (\mathbf{a}_{A/B})_{xyz}$$

$$= (-0.540\mathbf{j}) + \mathbf{0} + 0.6\mathbf{k} \times [0.6\mathbf{k} \times (8\mathbf{j} + 6\mathbf{k})] + 2(0.6\mathbf{k}) \times (1.20\mathbf{j} - 1.60\mathbf{k}) + (-0.320\mathbf{j} - 0.240\mathbf{k})$$

$$= \{-1.44\mathbf{i} - 3.74\mathbf{j} - 0.240\mathbf{k}\}\text{m/s}^2 \qquad \textbf{Ans.}$$

© 2010 Pearson Education, Inc., Upper Saddle River, NJ. All rights reserved. This material is protected under all copyright laws as they currently exist. No portion of this material may be reproduced, in any form or by any means, without permission in writing from the publisher.

20–46. The crane rotates about the z axis with a rate of $\omega_1 = 0.6$ rad/s, which is increasing at $\dot{\omega}_1 = 0.6$ rad/s^2. Also, the boom rotates downward at $\omega_2 = 0.2$ rad/s, which is increasing at $\dot{\omega}_2 = 0.3$ rad/s^2. Determine the velocity and acceleration of point A located at the end of the boom at the instant shown.

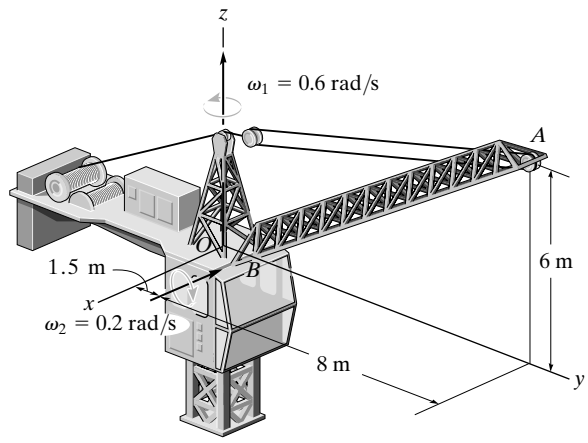

Coordinate Axes: The rotating x, y, z frame and fixed and fixed X, Y, Z frame are set with the origin at point B and O respectively.

Motion of *B*: Here, $\mathbf{r}_B$ change direction with respect to X, Y, Z frame. The time derivatives of $\mathbf{r}_B$ can be found by seeting another set of coordinate axis x', y', z' coincident with X, Y, Z rotating at $\Omega' = \omega_1 = \{0.6\mathbf{k}\}$ rad/s and $\dot{\Omega} = \dot{\omega}_1 = \{0.6\mathbf{k}\}$ rad/s^2. Here, $\mathbf{r}_B = \{1.5\mathbf{j}\}$ m

$$\mathbf{v}_B = \dot{\mathbf{r}}_B = (\dot{\mathbf{r}}_B)_{x'y'z'} + \Omega' \times \mathbf{r}_B = \mathbf{0} + 0.6\mathbf{k} \times 1.5\mathbf{j} = \{-0.9\mathbf{i}\} \text{ m/s}$$

$$\mathbf{a}_B = \ddot{\mathbf{r}}_B = \left[(\ddot{\mathbf{r}}_B)_{x'y'z'} + \Omega' \times (\dot{\mathbf{r}}_B)_{x'y'z'}\right] + \dot{\Omega}' \times \mathbf{r}_B + \Omega' \times \dot{\mathbf{r}}_B$$

$$= (\mathbf{0} + \mathbf{0}) + 0.6\mathbf{k} \times 1.5\mathbf{j} + 0.6\mathbf{k} \times (-0.9\mathbf{i}) = \{-0.9\mathbf{i} - 0.540\mathbf{j}\} \text{ m/s}^2$$

Motion of *A* with Respect to *B*: Let xyz axis rotate at $\Omega_{xyz} = \omega_2 = \{-0.2\mathbf{i}\}$ rad/s and $\Omega_{xyz} = \dot{\omega}_2 = \{-0.3\mathbf{i}\}$ rad/s^2. Here, $\mathbf{r}_{A/B} = \{8\mathbf{j} + 6\mathbf{k}\}$ m

$$(\mathbf{v}_{A/B})_{xyz} = \dot{\mathbf{r}}_{A/B} = (\dot{\mathbf{r}}_{A/B})_{xyz} + \Omega_{xyz} \times \mathbf{r}_{A/B} = \mathbf{0} + (-0.2\mathbf{i}) \times (8\mathbf{j} + 6\mathbf{k}) = \{1.20\mathbf{j} - 1.60\mathbf{k}\} \text{ m/s}$$

$$(\mathbf{a}_{A/B})_{xyz} = \ddot{\mathbf{r}}_{A/B} = \left[(\ddot{\mathbf{r}}_{A/B})_{xyz} + \Omega_{xyz} \times (\dot{\mathbf{r}}_{A/B})_{xyz}\right] + \dot{\Omega}_{xyz} \times \mathbf{r}_{A/B} + \Omega_{xyz} \times \dot{\mathbf{r}}_{A/B}$$

$$= \mathbf{0} + \mathbf{0} + (-0.3\mathbf{i}) \times (8\mathbf{i} + 6\mathbf{k}) + (-0.2\mathbf{i}) \times (1.20\mathbf{j} - 1.60\mathbf{k})$$

$$= \{1.48\mathbf{j} - 2.64\mathbf{k}\} \text{ m/s}^2$$

Motion of Point *A*: Here, $\Omega = \omega_1 = \{0.6\mathbf{k}\}$ rad/s and $\dot{\Omega} = \dot{\omega}_1 = \{0.6\mathbf{k}\}$ rad/s^2. Applying Eqs. 20–11 and 20-12, we have

$$\mathbf{v}_A = \mathbf{v}_B + \Omega \times \mathbf{r}_{A/B} + (\mathbf{v}_{A/B})_{xyz} = (-0.9\mathbf{i}) + 0.6\mathbf{k} \times (8\mathbf{j} + 6\mathbf{k}) + (1.20\mathbf{j} - 1.60\mathbf{k})$$

$$= \{-5.70\mathbf{i} + 1.20\mathbf{j} - 1.60\mathbf{k}\} \text{ m/s} \qquad \textbf{Ans.}$$

$$\mathbf{a}_A = \mathbf{a}_B + \dot{\Omega} \times \mathbf{r}_{A/B} + \Omega \times (\Omega \times \mathbf{r}_{A/B}) + 2\Omega \times (\mathbf{v}_{A/B})_{xyz} + (\mathbf{a}_{A/B})_{xyz}$$

$$= (-0.9\mathbf{i} - 0.540\mathbf{j}) + 0.6\mathbf{k} \times (8\mathbf{j} + 6\mathbf{k}) + 0.6\mathbf{k} \times [0.6\mathbf{k} \times (8\mathbf{j} + 6\mathbf{k})]$$

$$+ 2(0.6\mathbf{k}) \times (1.20\mathbf{j} - 1.60\mathbf{k}) + (1.48\mathbf{j} - 2.64\mathbf{k})$$

$$= \{-7.14\mathbf{i} - 1.94\mathbf{j} - 2.64\mathbf{k}\} \text{ m/s}^2 \qquad \textbf{Ans.}$$

© 2010 Pearson Education, Inc., Upper Saddle River, NJ. All rights reserved. This material is protected under all copyright laws as they currently exist. No portion of this material may be reproduced, in any form or by any means, without permission in writing from the publisher.

20–47. The motor rotates about the z axis with a constant angular velocity of $\omega_1 = 3$ rad/s. Simultaneously, shaft OA rotates with a constant angular velocity of $\omega_2 = 6$ rad/s. Also, collar C slides along rod AB with a velocity and acceleration of 6 m/s and 3 m/s^2. Determine the velocity and acceleration of collar C at the instant shown.

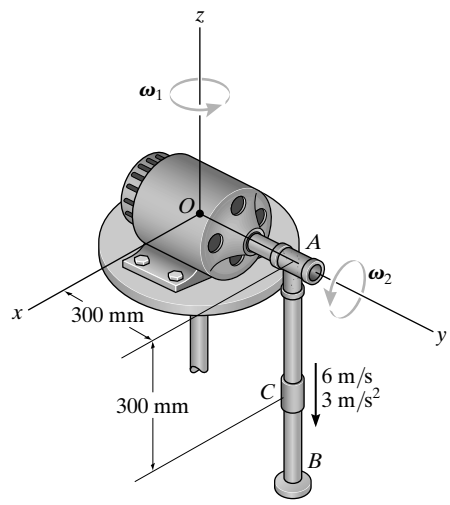

The xyz rotating frame is set parallel to the fixed XYZ frame with its origin attached to point A, Fig. a. Thus, the angular velocity and angular acceleration of this frame with respect to the XYZ frame are

$$\Omega = \omega_1 = [3\mathbf{k}]\ \text{rad/s} \qquad \dot{\Omega} = \dot{\omega}_1 = \mathbf{0}$$

Since point A rotates about a fixed axis (Z axis), its motion can be determined from

$$\mathbf{v}_A = \omega_1 \times \mathbf{r}_{OA} = (3\mathbf{k}) \times (0.3\mathbf{j}) = [-0.9\mathbf{i}]\ \text{m/s}$$

$$\begin{aligned}\mathbf{a}_A &= \dot{\omega}_1 \times \mathbf{r}_{OA} + \omega_1 \times (\omega_1 \times \mathbf{r}_{OA}) \\ &= \mathbf{0} + (3\mathbf{k}) \times \left[(3\mathbf{k}) \times (0.3\mathbf{j})\right] \\ &= [-2.7\mathbf{j}]\ \text{m/s}^2\end{aligned}$$

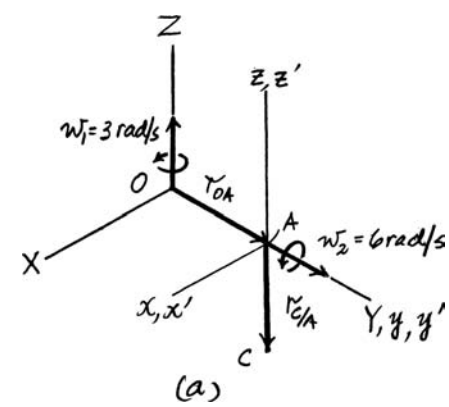

In order to determine the motion of the point C relative to point A, it is necessary to establish a second $x'y'z'$ rotating frame that coincides with the xyz frame at the instant considered, Fig. a. If we set the $x'y'z'$ frame to have an angular velocity relative to the xyz frame of $\Omega' = \omega_2 = [6\mathbf{j}]$ rad/s, the direction of $(\mathbf{r}_{C/A})_{xyz}$ will remain unchanged with respect to the $x'y'z'$ frame. Taking the time derivative of $(\mathbf{r}_{C/A})_{xyz}$,

$$\begin{aligned}(\mathbf{v}_{C/A})_{xyz} = (\dot{\mathbf{r}}_{C/A})_{xyz} &= \left[(\dot{\mathbf{r}}_{C/A})_{x'y'z'} + \omega_2 \times (\mathbf{r}_{C/A})_{xyz}\right] \\ &= (-6\mathbf{k}) + 6\mathbf{j} \times (-0.3\mathbf{k}) \\ &= [-1.8\mathbf{i} - 6\mathbf{k}]\ \text{m/s}\end{aligned}$$

Since $\Omega' = \omega_2$ has a constant direction with respect to the xyz frame, then $\dot{\Omega}' = \dot{\omega}_2 = \mathbf{0}$. Taking the time derivative of $(\dot{\mathbf{r}}_{C/A})_{xyz}$,

$$\begin{aligned}(\mathbf{a}_{C/A})_{xyz} = (\ddot{\mathbf{r}}_{C/A})_{xyz} &= \left[(\ddot{\mathbf{r}}_{C/A})_{x'y'z'} + \omega_2 \times (\dot{\mathbf{r}}_{C/A})_{x'y'z'}\right] + \dot{\omega}_2 \times (\mathbf{r}_{C/A})_{xyz} + \omega_2 \times (\dot{\mathbf{r}}_{C/A})_{xyz} \\ &= [(-3\mathbf{k}) + 6\mathbf{j} \times (-6\mathbf{k})] + \mathbf{0} + [6\mathbf{j} \times (-18\mathbf{j} - 6\mathbf{k})] \\ &= [-72\mathbf{i} + 7.8\mathbf{k}]\ \text{m/s}^2\end{aligned}$$

Thus,

$$\begin{aligned}\mathbf{v}_C &= \mathbf{v}_A + \Omega \times \mathbf{r}_{C/A} + (\mathbf{v}_{C/A})_{xyz} \\ &= (-0.9\mathbf{i}) + 3\mathbf{k} \times (-0.3\mathbf{k}) + (-1.8\mathbf{i} - 6\mathbf{k}) \\ &= [-2.7\mathbf{i} - 6\mathbf{k}]\ \text{m/s} \qquad \textbf{Ans.}\end{aligned}$$

and

$$\begin{aligned}\mathbf{a}_C &= \mathbf{a}_A + \dot{\Omega} \times \mathbf{r}_{C/A} + \Omega \times (\Omega \times \mathbf{r}_{C/A}) + 2\Omega \times (\mathbf{v}_{C/A})_{xyz} + (\mathbf{a}_{C/A})_{xyz} \\ &= (-2.7\mathbf{j}) + \mathbf{0} + 3\mathbf{k} \times [(3\mathbf{k}) \times (-0.3\mathbf{k})] + 2(3\mathbf{k}) \times (-1.8\mathbf{i} - 6\mathbf{k}) + (-72\mathbf{i} + 7.8\mathbf{k}) \\ &= [-72\mathbf{i} - 13.5\mathbf{j} + 7.8\mathbf{k}]\ \text{m/s}^2 \qquad \textbf{Ans.}\end{aligned}$$

© 2010 Pearson Education, Inc., Upper Saddle River, NJ. All rights reserved. This material is protected under all copyright laws as they currently exist. No portion of this material may be reproduced, in any form or by any means, without permission in writing from the publisher.

***20–48.** At the instant shown, the helicopter is moving upwards with a velocity $v_H = 4$ ft/s and has an acceleration $a_H = 2$ ft/s^2. At the same instant the frame H, *not* the horizontal blade, rotates about a vertical axis with a constant angular velocity $\omega_H = 0.9$ rad/s. If the tail blade B rotates with a constant angular velocity $\omega_{B/H} = 180$ rad/s, measured relative to H, determine the velocity and acceleration of point P, located on the end of the blade, at the instant the blade is in the vertical position.

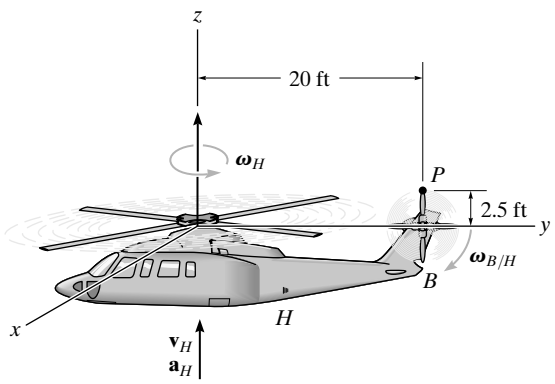

Relative to XYZ, let xyz have

$\Omega = \{0.9\mathbf{k}\}$ rad/s $\quad \dot{\omega} = \mathbf{0}$ (Ω does note change direction relative to XYZ.)

$\mathbf{r}_B = \{20\mathbf{j}\}$ ft ($\mathbf{r}_B$ changes direction relative to XYZ.)

$$\mathbf{v}_B = \dot{\mathbf{r}}_B = (\dot{\mathbf{r}}_B)_{xyz} + \Omega \times \mathbf{r}_B = 4\mathbf{k} + (0.9\mathbf{k}) \times (20\mathbf{j}) = \{-18\mathbf{i} + 4\mathbf{k}\} \text{ ft/s}$$

$$\begin{aligned}\mathbf{a}_B = \dot{\mathbf{r}}_B &= \left[(\ddot{\mathbf{r}}_B)_{xyz} + \Omega \times \left(\dot{\mathbf{r}}_B\right)_{xyz}\right] + \Omega \times \mathbf{r}_B + \Omega \times \dot{\mathbf{r}}_B \\ &= \left[2\mathbf{k} + \mathbf{0}\right] + \mathbf{0} + \left[(0.9\mathbf{k}) \times (-18\mathbf{i} + 4\mathbf{k})\right] \\ &= \{-16.2\mathbf{j} + 2\mathbf{k}\} \text{ ft/s}^2\end{aligned}$$

Relative to xyz, let $x'y'z'$ have

$\Omega_{xyz} = \{-180\mathbf{i}\}$ rad/s $\quad \dot{\Omega}_{xyz} = \mathbf{0}$ (Ω_{xyz} does not change direction relative to xyz.)

$(\mathbf{r}_{P/B})_{xyz} = \{2.5\mathbf{k}\}$ ft ($(\mathbf{r}_{P/B})_{xyz}$ change direction relative to xyz.)

$$(\mathbf{v}_{P/B})_{xyz} = (\mathbf{r}_{P/B})_{xyz} = (\dot{\mathbf{r}}_{P/B})_{x'y'z'} + \Omega_{xyz} \times (\mathbf{r}_{P/B})_{xyz} = \mathbf{0} + (-180\mathbf{i}) \times (2.5\mathbf{k}) = \{450\mathbf{j}\} \text{ ft/s}$$

$$(\mathbf{a}_{P/B})_{xyz} = (\ddot{\mathbf{r}}_{P/B})_{xyz} = \left[(\ddot{\mathbf{r}}_{P/B})_{x'y'z'} + \Omega_{xyz} \times (\dot{\mathbf{r}}_{P/B})_{x'y'z'}\right] + \dot{\Omega}_{xyz} \times (\mathbf{r}_{P/B})_{xyz} + \Omega_{xyz} \times (\dot{\mathbf{r}}_{P/B})_{xyz}$$

$$(\mathbf{a}_{P/B})_{xyz} = \left[\mathbf{0} + \mathbf{0}\right] + \mathbf{0} + (-180\mathbf{i}) \times (450\mathbf{j}) = \{-81\,000\mathbf{k}\} \text{ ft/s}^2$$

Thus,

$$\begin{aligned}\mathbf{v}_F &= \mathbf{v}_B + \Omega \times \mathbf{r}_{P/B} + (\mathbf{v}_{P/B})_{xyz} \\ &= (-18\mathbf{i} + 4\mathbf{k}) + \left[(0.9\mathbf{k}) \times (2.5\mathbf{k})\right] + (450\mathbf{j}) \\ &= \{-18\mathbf{i} + 450\mathbf{j} + 4\mathbf{k}\} \text{ft/s}\end{aligned}$$ **Ans.**

$$\begin{aligned}\mathbf{a}_P &= \mathbf{a}_B + \dot{\Omega} \times \mathbf{r}_{P/B} + \Omega \times (\Omega \times \mathbf{r}_{P/B}) + 2\Omega \times (\mathbf{v}_{P/B})_{xyz} + (\mathbf{a}_{P/B})_{xyz} \\ &= (-16.2\mathbf{j} + 2\mathbf{k}) + \mathbf{0} + (0.9\mathbf{k}) \times \left[(0.9\mathbf{k}) \times (2.5\mathbf{k})\right] + \left[2(0.9\mathbf{k}) \times (450\mathbf{j})\right] + (-81000\mathbf{k}) \\ &= \{-810\mathbf{i} - 16.2\mathbf{j} - 81\,000\mathbf{k}\} \text{ ft/s}^2\end{aligned}$$ **Ans.**

© 2010 Pearson Education, Inc., Upper Saddle River, NJ. All rights reserved. This material is protected under all copyright laws as they currently exist. No portion of this material may be reproduced, in any form or by any means, without permission in writing from the publisher.

•20–49. At a given instant the boom AB of the tower crane rotates about the z axis with the motion shown. At this same instant, $\theta = 60°$ and the boom is rotating downward such that $\dot{\theta} = 0.4$ rad/s and $\ddot{\theta} = 0.6$ rad/s^2. Determine the velocity and acceleration of the end of the boom A at this instant. The boom has a length of $l_{AB} = 40$ m.

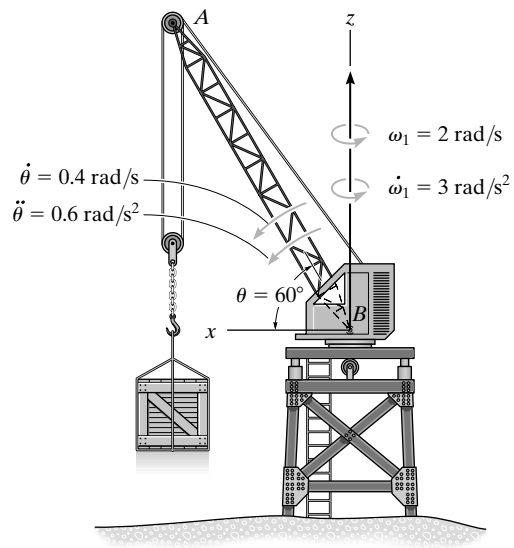

Coordinate Axis: The rotating x, y, z frame is set to be coincident with the fixed X, Y, Z frame with origin at point B.

Motion of *B*: Since point B does not move, then

$$\mathbf{a}_B = \mathbf{v}_B = \mathbf{0}$$

Motion of *A* with Respect to *B*: Let xyz axis rotate at $\Omega_{xyz} = \dot{\theta} = \{0.4\mathbf{j}\}$ rad/s and $\dot{\Omega}_{xyz} = \ddot{\theta} = \{0.6\mathbf{j}\}$ rad/s^2. Here.
$\mathbf{r}_{A/B} = \{40 \cos 60°\mathbf{i} + 40 \sin 60°\mathbf{k}\}$ m $= \{20.0\mathbf{i} + 34.64\mathbf{k}\}$ m.

$$(\mathbf{v}_{A/B})_{xyz} = \dot{\mathbf{r}}_{A/B} = (\dot{\mathbf{r}}_{A/B})_{xyz} + \Omega_{xyz} \times \mathbf{r}_{A/B} = \mathbf{0} + 0.4\mathbf{j} \times (20.0\mathbf{i} + 34.640\mathbf{k}) = \{13.86\mathbf{i} - 8.00\mathbf{k}\} \text{ m/s}$$

$$(\mathbf{a}_{A/B})_{xyz} = \ddot{\mathbf{r}}_{A/B} = \left[(\ddot{\mathbf{r}}_{A/B})_{xyz} + \Omega_{xyz} \times (\dot{\mathbf{r}}_{A/B})_{xyz}\right] + \dot{\Omega}_{xyz} \times \mathbf{r}_{A/B} + \Omega_{xyz} \times \dot{\mathbf{r}}_{A/B}$$

$$= \mathbf{0} + \mathbf{0} + 0.6\mathbf{j} \times (20.0\mathbf{i} + 34.64\mathbf{k}) + 0.4\mathbf{j} \times (13.86\mathbf{i} - 8.00\mathbf{k})$$

$$= \{17.58\mathbf{i} - 17.54\mathbf{k}\} \text{ m/s}^2$$

Motion of Point *A*: Here, $\Omega = \omega_1 = \{2\mathbf{k}\}$ rad/s and $\dot{\Omega} = \dot{\omega}_1 = \{3\mathbf{k}\}$ rad/s^2. Applying Eqs. 20–11 and 20-12. we have

$$\mathbf{v}_A = \mathbf{v}_B + \Omega \times \mathbf{r}_{A/B} + (\mathbf{v}_{A/B})_{xyz} = \mathbf{0} + 2\mathbf{k} \times (20.0\mathbf{i} + 34.64\mathbf{k}) + (13.86\mathbf{i} - 8.00\mathbf{k})$$

$$= \{13.9\mathbf{i} - 40.0\mathbf{j} - 8.00\mathbf{k}\} \text{ m/s} \qquad \textbf{Ans.}$$

$$\mathbf{a}_A = \mathbf{a}_B + \dot{\Omega} \times \mathbf{r}_{A/B} + \Omega \times (\Omega \times \mathbf{r}_{A/B}) + 2\Omega \times (\mathbf{v}_{A/B})_{xyz} + (\mathbf{a}_{A/B})_{xyz}$$

$$= \mathbf{0} + 3\mathbf{k} \times (20.0\mathbf{i} + 34.64\mathbf{k}) + 2\mathbf{k} \times [2\mathbf{k} \times (20.0\mathbf{i} + 34.64\mathbf{k})] + 2(2\mathbf{k}) \times (13.86\mathbf{i} - 8.00\mathbf{k}) + 17.58\mathbf{i} - 17.54\mathbf{k}$$

$$= \{-62.4\mathbf{i} + 115\mathbf{j} - 17.5\mathbf{k}\} \text{ m/s}^2 \qquad \textbf{Ans.}$$

© 2010 Pearson Education, Inc., Upper Saddle River, NJ. All rights reserved. This material is protected under all copyright laws as they currently exist. No portion of this material may be reproduced, in any form or by any means, without permission in writing from the publisher.

20–50. At the instant shown, the tube rotates about the z axis with a constant angular velocity $\omega_1 = 2$ rad/s, while at the same instant the tube rotates upward at a constant rate $\omega_2 = 5$ rad/s. If the ball B is blown through the tube at a rate $\dot{r} = 7$ m/s, which is increasing at $\ddot{r} = 2\ \text{m/s}^2$, determine the velocity and acceleration of the ball at the instant shown. Neglect the size of the ball.

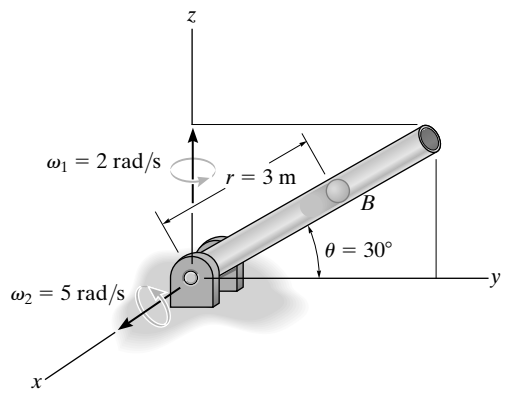

Coordinate Axis: The rotating x, y, z frame is set to be coincident with the fixed X, Y, Z frame with origin at point A.

Motion of A: Since point A does not move, then

$$\mathbf{a}_A = \mathbf{v}_A = \mathbf{0}$$

Motion of B with Respect to A: Let xyz axis rotate at $\Omega_{xyz} = \omega_2 = \{5\mathbf{i}\}$ rad/s and $\dot{\Omega}_{xyz} = \dot{\omega}_2 = \mathbf{0}$. Here, $\mathbf{r}_{B/A} = \{3\cos 30°\mathbf{j} + 3\sin 30°\mathbf{k}\}$ m $= \{2.5981\mathbf{j} + 1.50\mathbf{k}\}$ m, $(\dot{\mathbf{r}}_{B/A})_{xyz} = \{7\cos 30°\mathbf{j} + 7\sin 30°\mathbf{k}\}$ m/s $= \{6.0621\mathbf{j} + 3.50\mathbf{k}\}$ m/s and $(\ddot{\mathbf{r}}_{B/A})_{xyz} = \{2\cos 30\mathbf{j} + 2\sin 30°\mathbf{k}\}$ m/s^2 $= \{1.7321\mathbf{j} + 1\mathbf{k}\}$ m/s^2.

$$(\mathbf{v}_{B/A})_{xyz} = \dot{\mathbf{r}}_{B/A} = (\dot{\mathbf{r}}_{B/A})_{xyz} + \Omega_{xyz} \times \mathbf{r}_{B/A}$$
$$= 6.0621\mathbf{j} + 3.50\mathbf{k} + 5\mathbf{i} \times (2.5981\mathbf{j} + 1.50\mathbf{k}) = \{-1.4378\mathbf{j} + 16.4903\mathbf{k}\}\ \text{m/s}$$

$$(\mathbf{a}_{B/A})_{xyz} = \ddot{\mathbf{r}}_{B/A} = \left[(\ddot{\mathbf{r}}_{B/A})_{xyz} + \Omega_{xyz} \times (\dot{\mathbf{r}}_{B/A})_{xyz}\right] + \dot{\Omega}_{xyz} \times \mathbf{r}_{B/A} + \Omega_{xyz} \times \dot{\mathbf{r}}_{B/A}$$
$$= 1.7321\mathbf{j} + 1\mathbf{k} + 5\mathbf{i} \times (6.0621\mathbf{j} + 3.50\mathbf{k}) + \mathbf{0} + 5\mathbf{i} \times (-1.4378\mathbf{j} + 16.4903\mathbf{k})$$
$$= \{-98.2199\mathbf{j} - 24.1218\mathbf{k}\}\ \text{m/s}^2$$

Motion of Point B: Here, $\Omega = \omega_1 = \{2\mathbf{k}\}$ rad/s and $\dot{\Omega} = \dot{\omega}_1 = \mathbf{0}$. Applying Eqs. 20–11 and 20–12, we have

$$\mathbf{v}_B = \mathbf{v}_A + \Omega \times \mathbf{r}_{B/A} + (\mathbf{v}_{B/A})_{xyz} = \mathbf{0} + 2\mathbf{k} \times (2.5981\mathbf{j} + 1.50\mathbf{k}) + (-1.4378\mathbf{j} + 16.4903\mathbf{k})$$
$$= \{-5.20\mathbf{i} - 1.44\mathbf{j} + 16.5\mathbf{k}\}\ \text{m/s} \qquad \textbf{Ans.}$$

$$\mathbf{a}_B = \mathbf{a}_A + \ + \dot{\Omega} \times \mathbf{r}_{B/A} + \Omega \times (\Omega \times \mathbf{r}_{B/A}) + 2\Omega \times (\mathbf{v}_{B/A})_{xyz} + (\mathbf{a}_{B/A})_{xyz}$$
$$= \mathbf{0} + \mathbf{0} + 2\mathbf{k} \times [2\mathbf{k} \times (2.5981\mathbf{j} + 1.50\mathbf{k})] + 2(2\mathbf{k}) \times (-1.4378\mathbf{j} + 16.4903\mathbf{k}) + (-98.2199\mathbf{j} + 24.1218\mathbf{k})$$
$$= \{5.75\mathbf{i} - 109\mathbf{j} + 24.1\mathbf{k}\}\ \text{m/s}^2 \qquad \textbf{Ans.}$$

© 2010 Pearson Education, Inc., Upper Saddle River, NJ. All rights reserved. This material is protected under all copyright laws as they currently exist. No portion of this material may be reproduced, in any form or by any means, without permission in writing from the publisher.

20–51. At the instant shown, the tube rotates about the z axis with a constant angular velocity $\omega_1 = 2$ rad/s, while at the same instant the tube rotates upward at a constant rate $\omega_2 = 5$ rad/s. If the ball B is blown through the tube at a constant rate $\dot{r} = 7$ m/s, determine the velocity and acceleration of the ball at the instant shown. Neglect the size of the ball.

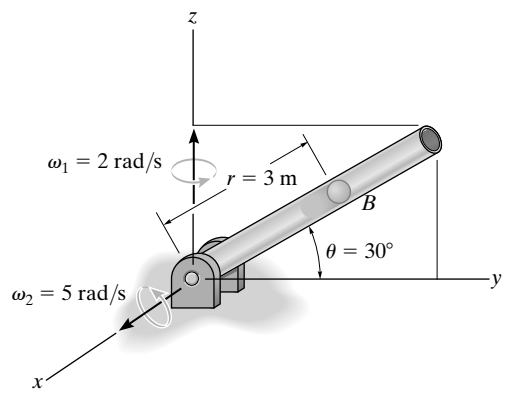

Coordinate Axis: The rotating x, y, z frame is set to be coincident with the fixed X, Y, Z frame with origin at point A.

Motion of A: Since point A does not move, then

$$\mathbf{a}_A = \mathbf{v}_A = \mathbf{0}$$

Motion of B with Respect to A: Let xyz axis rotate at $\Omega_{xyz} = \omega_2 = \{5\mathbf{i}\}$ rad/s and $\dot{\Omega}_{xyz} = \dot{\omega}_2 = \mathbf{0}$. Here, $\mathbf{r}_{B/A} = \{3\cos 30°\mathbf{j} + 3\sin 30°\mathbf{k}\}$ m $= \{2.5981\mathbf{j} + 1.50\mathbf{k}\}$ m and $(\dot{\mathbf{r}}_{B/A})_{xyz} = \{7\cos 30\mathbf{j} + 7\sin 30°\mathbf{k}\}$ m/s $= \{6.0621\mathbf{j} + 3.50\mathbf{k}\}$ m/s.

$$(\mathbf{v}_{B/A})_{xyz} = \dot{\mathbf{r}}_{B/A} = (\dot{\mathbf{r}}_{B/A})_{xyz} + \Omega_{xyz} \times \mathbf{r}_{B/A}$$

$$= 6.0621\mathbf{j} + 3.50\mathbf{k} + 5\mathbf{i} \times (2.5981\mathbf{j} + 1.50\mathbf{k}) = \{-1.4378\mathbf{j} + 16.4903\mathbf{k}\} \text{ m/s}$$

$$(\mathbf{a}_{B/A})_{xyz} = \ddot{\mathbf{r}}_{B/A} = \left[(\ddot{\mathbf{r}}_{B/A})_{xyz} + \Omega_{xyz} \times (\dot{\mathbf{r}}_{B/A})_{xyz}\right] + \dot{\Omega}_{xyz} \times \mathbf{r}_{B/A} + \Omega_{xyz} \times \dot{\mathbf{r}}_{B/A}$$

$$= \mathbf{0} + 5\mathbf{i} \times (6.0621\mathbf{j} + 3.50\mathbf{k}) + \mathbf{0} + 5\mathbf{i} \times (-1.4378\mathbf{j} + 16.4903\mathbf{k})$$

$$= \{-99.9519\mathbf{j} + 23.1218\mathbf{k}\} \text{ m/s}^2$$

Motion of Point B: Here, $\Omega = \omega_1 = \{2\mathbf{k}\}$ rad/s and $\dot{\Omega} = \dot{\omega}_1 = \mathbf{0}$. Applying Eqs. 20–11 and 20–12, we have

$$\mathbf{v}_B = \mathbf{v}_A + \Omega \times \mathbf{r}_{B/A} + (\mathbf{v}_{B/A})_{xyz} = \mathbf{0} + 2\mathbf{k} \times (2.5981\mathbf{j} + 1.50\mathbf{k}) + (-1.4378\mathbf{j} + 16.4903\mathbf{k})$$

$$= \{-5.20\mathbf{i} - 1.44\mathbf{j} + 16.5\mathbf{k}\}\text{m/s} \qquad \textbf{Ans.}$$

$$\mathbf{a}_B = \mathbf{a}_A + \ + \dot{\Omega} \times \mathbf{r}_{B/A} + \Omega \times (\Omega \times \mathbf{r}_{B/A}) + 2\Omega \times (\mathbf{v}_{B/A})_{xyz} + (\mathbf{a}_{B/A})_{xyz}$$

$$= \mathbf{0} + \mathbf{0} + 2\mathbf{k} \times [2\mathbf{k} \times (2.5981\mathbf{j} + 1.50\mathbf{k})] + 2(2\mathbf{k}) \times (-1.4378\mathbf{j} + 16.4903\mathbf{k}) + (-99.9519\mathbf{j} + 23.1218\mathbf{k})$$

$$= \{5.75\mathbf{i} - 110\mathbf{j} + 23.1\mathbf{k}\} \text{ m/s}^2 \qquad \textbf{Ans.}$$

© 2010 Pearson Education, Inc., Upper Saddle River, NJ. All rights reserved. This material is protected under all copyright laws as they currently exist. No portion of this material may be reproduced, in any form or by any means, without permission in writing from the publisher.

***20–52.** At the instant $\theta = 30°$, the frame of the crane and the boom AB rotate with a constant angular velocity of $\omega_1 = 1.5$ rad/s and $\omega_2 = 0.5$ rad/s, respectively. Determine the velocity and acceleration of point B at this instant.

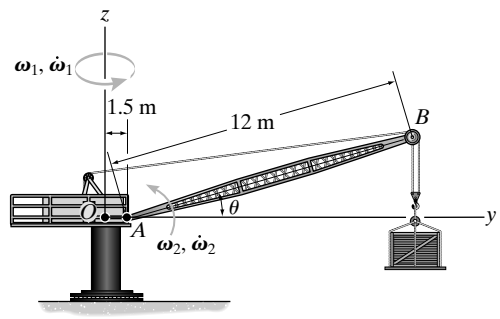

The xyz rotating frame is set parallel to the fixed XYZ frame with its origin attached to point A, Fig. a. The angular velocity and angular acceleration of this frame with respect to the XYZ frame are

$$\Omega = \omega_1 = [1.5\mathbf{k}]\ \text{rad/s} \qquad \dot{\Omega} = \dot{\omega}_1 = \mathbf{0}$$

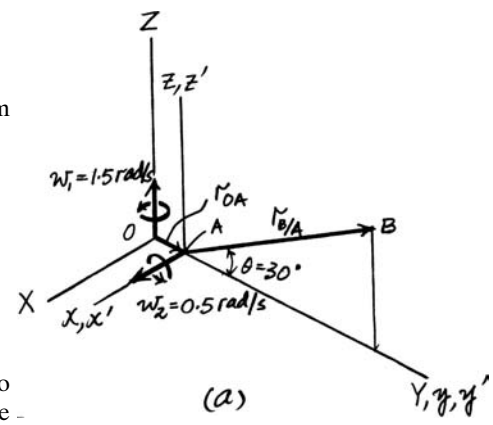

Since point A rotates about a fixed axis (Z axis), its motion can be determined from

$$\mathbf{v}_A = \omega_1 \times \mathbf{r}_{OA} = (1.5\mathbf{k}) \times (1.5\mathbf{j}) = [-2.25\mathbf{i}]\ \text{m/s}$$

$$\begin{aligned}\mathbf{a}_A &= \dot{\omega}_1 \times \mathbf{r}_{OA} + \omega_1 \times (\omega_1 \times \mathbf{r}_{OA}) \\ &= \mathbf{0} + (1.5\mathbf{k}) \times [(1.5\mathbf{k}) \times (1.5\mathbf{j})] \\ &= [-3.375\mathbf{j}]\ \text{m/s}^2\end{aligned}$$

In order to determine the motion of point B relative to point A, it is necessary to establish a second $x'y'z'$ rotating frame that coincides with the xyz frame at the instant considered, Fig. a. If we set the $x'y'z'$ frame to have an angular velocity relative to the xyz frame of $\Omega' = \omega_2 = [0.5\mathbf{i}]$ rad/s, the direction of $(\mathbf{r}_{B/A})_{xyz}$ will remain unchanged with respect to the $x'y'z'$ frame. Taking the time derivative of $(\mathbf{r}_{B/A})_{xyz}$,

$$\begin{aligned}(\mathbf{v}_{B/A})_{xyz} &= (\dot{\mathbf{r}}_{B/A})_{xyz} = \left[(\dot{\mathbf{r}}_{B/A})_{x'y'z'} + \omega_2 \times (\mathbf{r}_{B/A})_{xyz}\right] \\ &= \mathbf{0} + (0.5\mathbf{i}) \times (12\cos 30°\,\mathbf{j} + 12\sin 30°\mathbf{k}) \\ &= [-3\mathbf{j} + 5.196\mathbf{k}]\ \text{m/s}\end{aligned}$$

Since $\Omega' = \omega_2$ has a constant direction with respect to the xyz frame, then $\dot{\Omega}' = \dot{\omega}_2 = \mathbf{0}$. Taking the time derivative of $(\dot{\mathbf{r}}_{A/B})_{xyz}$,

$$\begin{aligned}(\mathbf{a}_{A/B})_{xyz} &= (\ddot{\mathbf{r}}_{A/B})_{xyz} = \left[(\ddot{\mathbf{r}}_{A/B})_{x'y'z'} + \omega_2 \times (\dot{\mathbf{r}}_{A/B})_{x'y'z'}\right] + \dot{\omega}_2 \times (\mathbf{r}_{A/B})_{xyz} + \omega_2 \times (\dot{\mathbf{r}}_{A/B})_{xyz} \\ &= [0 + 0] + 0 + (0.5\mathbf{i}) \times (-3\mathbf{j} + 5.196\mathbf{k}) \\ &= [-2.598\mathbf{j} - 1.5\mathbf{k}]\ \text{m/s}^2\end{aligned}$$

Thus,

$$\begin{aligned}\mathbf{v}_B &= \mathbf{v}_A + \Omega \times \mathbf{r}_{B/A} + (\mathbf{v}_{B/A})_{xyz} \\ &= (-2.25\mathbf{i}) + 1.5\mathbf{k} \times (12\cos 30°\,\mathbf{j} + 12\sin 30°\,\mathbf{k}) + (-3\mathbf{j} + 5.196\mathbf{k}) \\ &= [-17.8\mathbf{i} - 3\mathbf{j} + 5.20\mathbf{k}]\ \text{m/s} \qquad \textbf{Ans.}\end{aligned}$$

and

$$\begin{aligned}\mathbf{a}_B &= \mathbf{a}_A + \dot{\Omega} \times \mathbf{r}_{B/A} + \Omega \times (\Omega \times \mathbf{r}_{B/A}) + 2\Omega \times (\mathbf{v}_{AB})_{xyz} + (\mathbf{a}_{AB})_{xyz} \\ &= (-3.375\mathbf{j}) + 0 + 1.5\mathbf{k} \times \left[(1.5\mathbf{k}) \times (12\cos 30°\,\mathbf{j} + 12\sin 30°\,\mathbf{k})\right] + 2(1.5\mathbf{k}) \times (-3\mathbf{j} + 5.196\mathbf{k}) + (-2.598\mathbf{j} - 1.5\mathbf{k}) \\ &= [9\mathbf{i} - 29.4\mathbf{j} - 1.5\mathbf{k}]\ \text{m/s}^2 \qquad \textbf{Ans.}\end{aligned}$$

© 2010 Pearson Education, Inc., Upper Saddle River, NJ. All rights reserved. This material is protected under all copyright laws as they currently exist. No portion of this material may be reproduced, in any form or by any means, without permission in writing from the publisher.

•20–53. At the instant $\theta = 30°$, the frame of the crane is rotating with an angular velocity of $\omega_1 = 1.5$ rad/s and angular acceleration of $\dot{\omega}_1 = 0.5$ rad/s^2, while the boom AB rotates with an angular velocity of $\omega_2 = 0.5$ rad/s and angular acceleration of $\dot{\omega}_2 = 0.25$ rad/s^2. Determine the velocity and acceleration of point B at this instant.

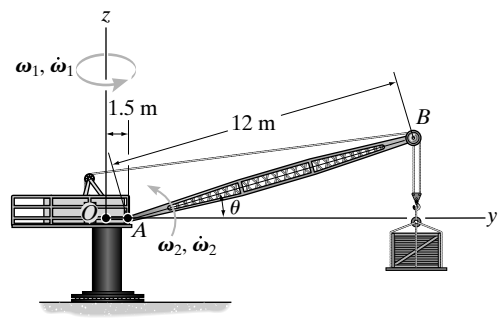

The xyz rotating frame is set parallel to the fixed XYZ frame with its origin attached to point A, Fig. a. Thus, the angular velocity and angular acceleration of this frame with respect to the XYZ frame are

$$\Omega = \omega_1 = [1.5\mathbf{k}] \text{ rad/s} \qquad \dot{\Omega} = [0.5\mathbf{k}] \text{ rad/s}^2$$

Since point A rotates about a fixed axis (Z axis), its motion can be determined from

$$\mathbf{v}_A = \omega_1 \times \mathbf{r}_{OA} = (1.5\mathbf{k}) \times (1.5\mathbf{j}) = [-2.25\mathbf{i}] \text{ m/s}$$

$$\mathbf{a}_A = \dot{\omega}_1 \times \mathbf{r}_{OA} + \omega_1 \times (\omega_1 \times \mathbf{r}_{OA})$$

$$= (0.5\mathbf{k}) \times (1.5\mathbf{j}) + (1.5\mathbf{k}) \times \left[(1.5\mathbf{k}) \times (1.5\mathbf{j})\right]$$

$$= [-0.75\mathbf{i} - 3.375\mathbf{j}] \text{ m/s}^2$$

In order to determine the motion of point B relative to point A, it is necessary to establish a second $x'y'z'$ rotating frame that coincides with the xyz frame at the instant considered, Fig. a. If we set the $x'y'z'$ frame to have an angular velocity relative to the xyz frame of $\Omega' = \omega_2 = [0.5\mathbf{i}]$ rad/s, the direction of $(\mathbf{r}_{B/A})_{xyz}$ will remain unchanged with respect to the $x'y'z'$ frame. Taking the time derivative of $(\mathbf{r}_{B/A})_{xyz}$,

$$(\mathbf{v}_{B/A})_{xyz} = (\dot{\mathbf{r}}_{B/A})_{xyz} = \left[(\dot{\mathbf{r}}_{B/A})_{x'y'z'} + \omega_2 \times (\mathbf{r}_{B/A})_{xyz}\right]$$

$$= \mathbf{0} + (0.5\mathbf{i}) \times (12 \cos 30°\, \mathbf{j} + 12 \sin 30°\, \mathbf{k})$$

$$= [-3\mathbf{j} + 5.196\mathbf{k}] \text{ m/s}$$

Since $\Omega' = \omega_2$ has a constant direction with respect to the xyz frame, then $\dot{\Omega}' = \dot{\omega}_2 = [0.25\mathbf{i}]$ m/s^2. Taking the time derivative of $(\dot{\mathbf{r}}_{B/A})_{xyz}$,

© 2010 Pearson Education, Inc., Upper Saddle River, NJ. All rights reserved. This material is protected under all copyright laws as they currently exist. No portion of this material may be reproduced, in any form or by any means, without permission in writing from the publisher.

•20–53. Continued

$$(\mathbf{a}_{B/A}) = (\ddot{\mathbf{r}}_{B/A})_{xyz} = \left[(\ddot{\mathbf{r}}_{B/A})_{x'y'z'} + \omega_2 \times (\dot{\mathbf{r}}_{B/A})_{x'y'z'}\right] + \dot{\Omega}_2 \times (\mathbf{r}_{B/A})_{xyz} + \omega_2 \times (\dot{\mathbf{r}}_{B/A})_{xyz}$$

$$= [0 + 0] + (0.25\mathbf{i}) \times (12\cos 30°\,\mathbf{j} + 12\sin 30°\mathbf{k}) + 0.5\mathbf{i} \times (-3\mathbf{j} + 5.196\mathbf{k})$$

$$= [-4.098\mathbf{j} + 1.098\mathbf{k}]\ \text{m/s}^2$$

Thus,

$$\mathbf{v}_B = \mathbf{v}_A + \Omega \times \mathbf{r}_{B/A} + (\mathbf{v}_{B/A})_{xyz}$$

$$= (-2.25\mathbf{i}) + 1.5\mathbf{k} \times (12\cos 30°\,\mathbf{j} + 12\sin 30°\mathbf{k}) + (-3\mathbf{j} + 5.196\mathbf{k})$$

$$= [-17.8\mathbf{i} - 3\mathbf{j} + 5.20\mathbf{k}]\ \text{m/s} \qquad \textbf{Ans.}$$

and

$$\mathbf{a}_B = \mathbf{a}_A = \dot{\Omega} \times \mathbf{r}_{B/A} + \Omega \times (\Omega \times \mathbf{r}_{B/A}) + 2\Omega \times (\mathbf{v}_{B/A})_{xyz} + (\mathbf{a}_{B/A})_{xyz}$$

$$= (-0.75\mathbf{i} - 3.375\mathbf{j}) + 0.5\mathbf{k} \times (12\cos 30°\mathbf{j} + 12\sin 30°\,\mathbf{k}) + (1.5\mathbf{k}) \times \left[(1.5\mathbf{k}) \times (12\cos 30°\,\mathbf{j} + 12\sin 30°\,\mathbf{k})\right]$$

$$+2(1.5\mathbf{k}) \times (-3\mathbf{j} + 5.196\mathbf{k}) + (-4.098\mathbf{j} + 1.098\mathbf{k})$$

$$= [3.05\mathbf{i} - 30.9\mathbf{j} + 1.10\mathbf{k}]\ \text{m/s}^2 \qquad \textbf{Ans.}$$

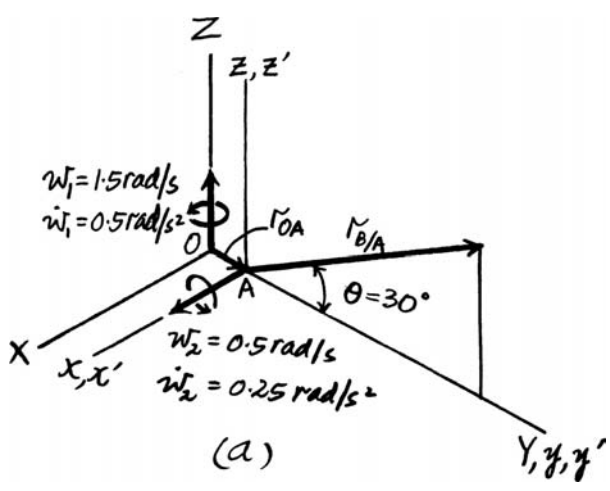

© 2010 Pearson Education, Inc., Upper Saddle River, NJ. All rights reserved. This material is protected under all copyright laws as they currently exist. No portion of this material may be reproduced, in any form or by any means, without permission in writing from the publisher.

20–54. At the instant shown, the base of the robotic arm rotates about the z axis with an angular velocity of $\omega_1 = 4$ rad/s, which is increasing at $\dot{\omega}_1 = 3$ rad/s^2. Also, the boom BC rotates at a constant rate of $\omega_{BC} = 8$ rad/s. Determine the velocity and acceleration of the part C held in its grip at this instant.

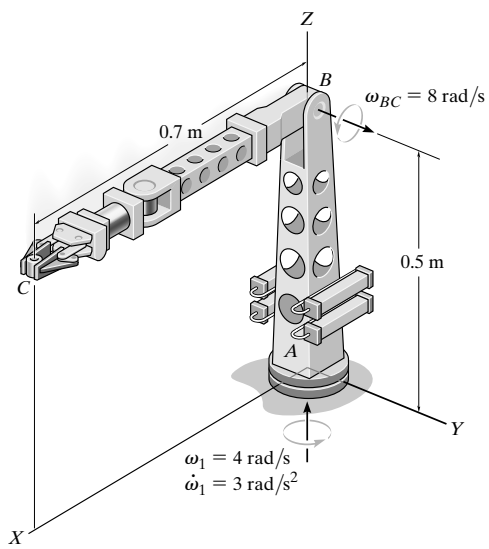

Relative to XYZ, let xyz have origin at B and have

$\Omega = \{4\mathbf{k}\}$ rad/s, $\quad \Omega = \{3\mathbf{k}\}$ rad/s^2 (Ω does not change direction relative to XYZ.)

$\mathbf{r}_B = \{0.5\mathbf{k}\}$ m ($\mathbf{r}_B$ does not change direction relative to XYZ.)

$\mathbf{v}_B = 0$

$\mathbf{a}_B = 0$

Relative to xyz, let coincident $x'y'z'$ have origin at B and have

$\Omega_{xyz} = \{8\mathbf{j}\}$ rad/s, $\quad \Omega_{xyz} = \mathbf{0}$ (Ω_{xyz} does not change direction relative to xyz.)

$(\mathbf{r}_{C/B})_{xyz} = \{0.7\mathbf{i}\}$ m ($(\mathbf{r}_{C/B})_{xyz}$ changes direction relative to xyz.)

$$(\mathbf{v}_{C/B})_{xyz} = \left(\mathbf{r}_{C/B}\right)_{xyz} = \left(\dot{\mathbf{r}}_{C/B}\right)_{x'y'z'} + \Omega_{xyz} \times \left(\mathbf{r}_{C/B}\right)_{xyz} = \mathbf{0} + (8\mathbf{j}) \times (0.7\mathbf{i}) = \{-5.6\mathbf{k}\} \text{ m/s}$$

$$(\mathbf{a}_{C/B})_{xyz} = \left(\mathbf{r}_{C/B}\right)_{xyz} = \left[\left(\ddot{\mathbf{r}}_{C/B}\right)_{x'y'z'} + \Omega_{xyz} \times \left(\dot{\mathbf{r}}_{C/B}\right)_{x'y'z'}\right] + \dot{\Omega}_{xyz} \times \left(\mathbf{r}_{C/B}\right)_{xyz} + \Omega_{xyz} \times \left(\dot{\mathbf{r}}_{C/B}\right)_{xyz}$$
$$= \mathbf{0} + \mathbf{0} + \mathbf{0} + (8\mathbf{j}) \times (-5.6\mathbf{k}) = \{-44.8\mathbf{i}\} \text{ m/s}^2$$

Thus,

$$\mathbf{v}_C = \mathbf{v}_B + \Omega \times \mathbf{r}_{C/B} + (\mathbf{v}_{C/B})_{xyz} = \mathbf{0} + (4\mathbf{k}) \times (0.7\mathbf{i}) + (-5.6\mathbf{k})$$
$$= \{2.80\mathbf{j} - 5.60\mathbf{k}\} \text{ m/s} \qquad \textbf{Ans.}$$

$$\mathbf{a}_C = \mathbf{a}_B + \Omega \times \mathbf{r}_{C/B} + \Omega \times \left(\Omega \times \mathbf{r}_{C/B}\right) + 2\Omega \times (\mathbf{v}_{C/B})_{xyz} + (\mathbf{a}_{C/B})_{xyz}$$
$$= \mathbf{0} + (3\mathbf{k}) \times (0.7\mathbf{i}) + (4\mathbf{k}) \times \left[(4\mathbf{k}) \times (0.7\mathbf{i})\right]$$
$$= 2(4\mathbf{k}) \times (-5.6\mathbf{k}) - 44.8\mathbf{i}$$
$$= \{-56\mathbf{i} + 2.1\mathbf{j}\} \text{ m/s}^2 \qquad \textbf{Ans.}$$

© 2010 Pearson Education, Inc., Upper Saddle River, NJ. All rights reserved. This material is protected under all copyright laws as they currently exist. No portion of this material may be reproduced, in any form or by any means, without permission in writing from the publisher.

20–55. At the instant shown, the base of the robotic arm rotates about the z axis with an angular velocity of $\omega_1 = 4$ rad/s, which is increasing at $\dot{\omega}_1 = 3$ rad/s^2. Also, the boom BC rotates at $\omega_{BC} = 8$ rad/s, which is increasing at $\dot{\omega}_{BC} = 2$ rad/s^2. Determine the velocity and acceleration of the part C held in its grip at this instant.

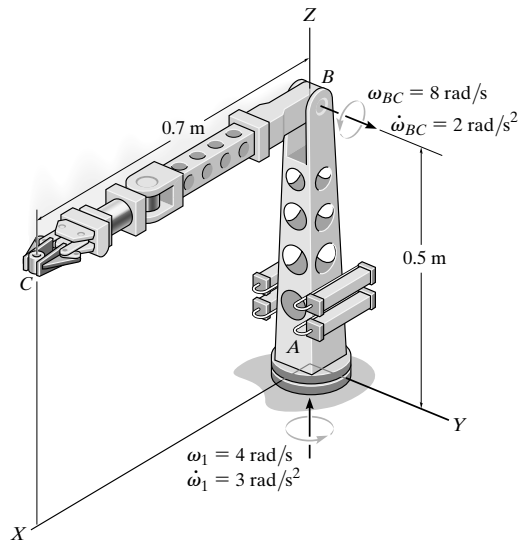

Relative to XYZ, let xyz with origin at B have

$\Omega = \{4\mathbf{k}\}$ rad/s, $\quad \dot{\Omega} = \{3\mathbf{k}\}$ rad/s^2 (Ω does not change direction relative to XYZ.)

$\mathbf{r}_B = \{0.5\mathbf{k}\}$ m ($\mathbf{r}_B$ does not change direction relative to XYZ.)

$\mathbf{v}_B = \mathbf{0}$

$\mathbf{a}_B = \mathbf{0}$

Relative to xyz, let coincident $x'y'z'$ have origin at B and have

$\Omega_{xyz} = \{8\mathbf{j}\}$ rad/s, $\quad \dot{\Omega}_{xyz} = \{2\mathbf{j}\}$ rad/s^2 (Ω does not change direction relative to xyz.)

$(\mathbf{r}_{C/B})_{xyz} = \{0.7\mathbf{i}\}$ m (Ω does not change direction relative to xyz.)

$$(\mathbf{v}_{C/B})_{xyz} = \left(\mathbf{r}_{C/B}\right)_{xyz} = \left(\mathbf{r}_{C/B}\right)_{x'y'z'} + \Omega_{xyz} \times \left(\mathbf{r}_{C/B}\right)_{xyz} = \mathbf{0} + (8\mathbf{j}) \times (0.7\mathbf{i}) = \{-5.6\mathbf{k}\} \text{ m/s}$$

$$(\mathbf{a}_{C/B})_{xyz} = \left(\mathbf{r}_{C/B}\right)_{xyz} = \left[\left(\ddot{\mathbf{r}}_{C/B}\right)_{x'y'z'} + \Omega_{xyz} \times \left(\dot{\mathbf{r}}_{C/B}\right)_{x'y'z'}\right] + \dot{\Omega}_{xyz} \times \left(\mathbf{r}_{C/B}\right)_{xyz} + \Omega_{xyz} \times \left(\mathbf{r}_{C/B}\right)_{xyz}$$

$$= \mathbf{0} + \mathbf{0} + (2\mathbf{j}) \times (0.7\mathbf{i}) + (8\mathbf{j}) \times (-5.6\mathbf{k}) = \{-44.8\mathbf{i} - 1.40\mathbf{k}\} \text{ m/s}^2$$

Thus,

$$\mathbf{v}_C = \mathbf{v}_B + \Omega \times \mathbf{r}_{C/B} + (\mathbf{v}_{C/B})_{xyz} = \mathbf{0} + (4\mathbf{k}) \times (0.7\mathbf{i}) + (-5.6\mathbf{k})$$

$$= \{2.80\mathbf{j} - 5.60\mathbf{k}\} \text{ m/s} \qquad \textbf{Ans.}$$

$$\mathbf{a}_C = \mathbf{a}_B + \dot{\Omega} \times \mathbf{r}_{C/B} + \Omega \times \left(\Omega \times \mathbf{r}_{C/B}\right) + 2\Omega \times (\mathbf{v}_{C/B})_{xyz} + (\mathbf{a}_{C/B})_{xyz}$$

$$= \mathbf{0} + (3\mathbf{k}) \times (0.7\mathbf{i}) + (4\mathbf{k}) \times \left[(4\mathbf{k}) \times (0.7\mathbf{i})\right]$$

$$= 2(4\mathbf{k}) \times (-5.6\mathbf{k}) - 44.8\mathbf{i} - 1.40\mathbf{k}$$

$$= \{-56\mathbf{i} + 2.1\mathbf{j} - 1.40\mathbf{k}\} \text{ m/s}^2 \qquad \textbf{Ans.}$$

© 2010 Pearson Education, Inc., Upper Saddle River, NJ. All rights reserved. This material is protected under all copyright laws as they currently exist. No portion of this material may be reproduced, in any form or by any means, without permission in writing from the publisher.

•21–1. Show that the sum of the moments of inertia of a body, $I_{xx} + I_{yy} + I_{zz}$, is independent of the orientation of the x, y, z axes and thus depends only on the location of its origin.

$$I_{xx} + I_{yy} + I_{zz} = \int_m (y^2 + z^2)dm + \int_m (x^2 + z^2)dm + \int_m (x^2 + y^2)dm$$

$$= 2\int_m (x^2 + y^2 + z^2)dm$$

However, $x^2 + y^2 + z^2 = r^2$, where r is the distance from the origin O to dm. Since $|r|$ is constant, it does not depend on the orientation of the x, y, z axis. Consequently, $I_{xx} + I_{yy} + I_{zz}$ is also indepenent of the orientation of the x, y, z axis. **Q.E.D.**

© 2010 Pearson Education, Inc., Upper Saddle River, NJ. All rights reserved. This material is protected under all copyright laws as they currently exist. No portion of this material may be reproduced, in any form or by any means, without permission in writing from the publisher.

21–2. Determine the moment of inertia of the cone with respect to a vertical $\bar{y}$ axis that passes through the cone's center of mass. What is the moment of inertia about a parallel axis y' that passes through the diameter of the base of the cone? The cone has a mass m.

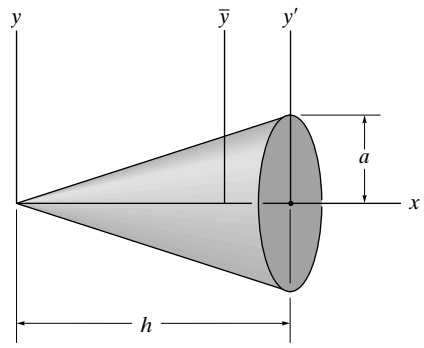

The mass of the differential element is $dm = \rho dV = \rho(\pi y^2)\,dx = \dfrac{\rho\pi a^2}{h^2}x^2dx$.

$$dI_y = \frac{1}{4}dmy^2 + dmx^2$$

$$= \frac{1}{4}\left[\frac{\rho\pi a^2}{h^2}x^2\,dx\right]\left(\frac{a}{h}x\right)^2 + \left(\frac{\rho\pi a^2}{h^2}x^2\right)x^2\,dx$$

$$= \frac{\rho\,\pi a^2}{4h^4}(4h^2 + a^2)\,x^4\,dx$$

$$I_y = \int dI_y = \frac{\rho\pi a^2}{4h^4}(4h^2 + a^2)\int_0^h x^4dx = \frac{\rho\,\pi a^2 h}{20}(4h^2 + a^2)$$

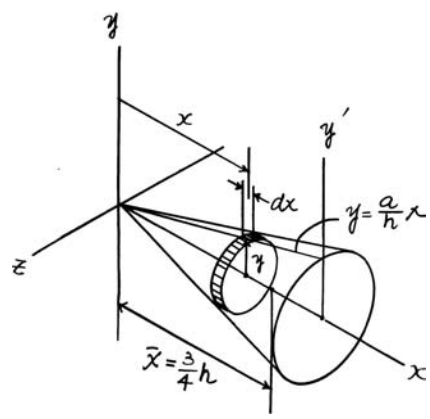

However,

$$m = \int_m dm = \frac{\rho\,\pi a^2}{h^2}\int_0^h x^2\,dx = \frac{\rho\,\pi a^2 h}{3}$$

Hence,

$$I_y = \frac{3m}{20}(4h^2 + a^2)$$

Using the parallel axis theorem:

$$I_y = I_{\bar{y}} + md^2$$

$$\frac{3m}{20}(4h^2 + a^2) = I_{\bar{y}} + m\left(\frac{3h}{4}\right)^2$$

$$I_{\bar{y}} = \frac{3m}{80}(h^2 + 4a^2) \qquad \textbf{Ans.}$$

$$I_{y'} = I_y + md^2$$

$$= \frac{3m}{80}(h^2 + 4a^2) + m\left(\frac{h}{4}\right)^2$$

$$= \frac{m}{20}(2h^2 + 3a^2) \qquad \textbf{Ans.}$$

© 2010 Pearson Education, Inc., Upper Saddle River, NJ. All rights reserved. This material is protected under all copyright laws as they currently exist. No portion of this material may be reproduced, in any form or by any means, without permission in writing from the publisher.

21–3. Determine the moments of inertia I_x and I_y of the paraboloid of revolution. The mass of the paraboloid is m.

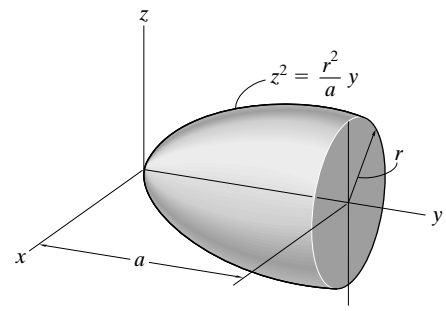

$$m = \rho \int_0^a \pi z^2\, dy = \rho\pi \int_0^a \left(\frac{r^2}{a}\right) y dy = \rho r\left(\frac{r^2}{2}\right) a$$

$$I_v = \int_m \frac{1}{2}\, dm\, z^2 = \frac{1}{2}\rho\pi \int_0^a z^4 dy = \frac{1}{2}\rho\pi\left(\frac{r^4}{a^2}\right)\int_0^a v^2 dy = \rho\pi\left(\frac{r^4}{6}\right) a$$

Thus,

$$I_x = \frac{1}{3} mr^2 \qquad \textbf{Ans.}$$

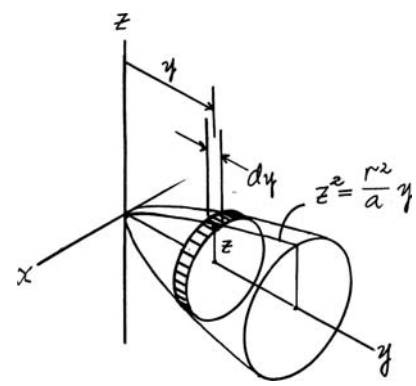

$$I_x = \int_m \left(\frac{1}{4}\, dm\, z^2 + dm\, y^2\right) = \frac{1}{4}\rho\pi \int_0^a z^4\, dy + \rho \int_0^a \pi z^2 y^2\, dy$$

$$= \frac{1}{4}\rho\pi\left(\frac{r^4}{a^2}\right)\int_0^a y^2 dy + \rho\pi\left(\frac{r^2}{a}\right)\int_0^a y^3 dy = \frac{\rho\pi r^4 a}{12} + \frac{\rho\pi r^2 a^3}{4} = \frac{1}{6} mr^2 + \frac{1}{2} ma^2$$

$$I_x = \frac{m}{6}(r^2 + 3a^2) \qquad \textbf{Ans.}$$

***21–4.** Determine by direct integration the product of inertia I_{yz} for the homogeneous prism. The density of the material is ρ. Express the result in terms of the total mass m of the prism.

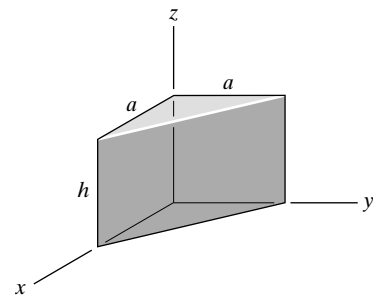

The mass of the differential element is $dm = \rho dV = \rho hx dy = \rho h(a - y) dy$.

$$m = \int_m dm = \rho h \int_0^a (a - y) dy = \frac{\rho a^2 h}{2}$$

Using the parallel axis theorem:

$$dI_{yz} = (dI_{y'z'})_G + dm\, y_G z_G$$

$$= 0 + (\rho hx dy)(y)\left(\frac{h}{2}\right)$$

$$= \frac{\rho h^2}{2} xy dy$$

$$= \frac{\rho h^2}{2}(ay - y^2)\, dy$$

$$I_{yz} = \frac{\rho h^2}{2}\int_0^a (ay - y^2)\, dy = \frac{\rho a^3 h^2}{12} = \frac{1}{6}\left(\frac{\rho a^2 h}{2}\right)(ah) = \frac{m}{6} ah \qquad \textbf{Ans.}$$

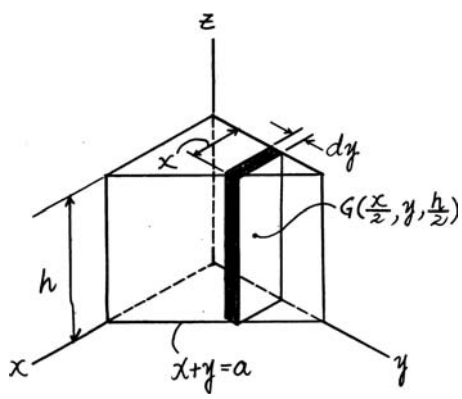

© 2010 Pearson Education, Inc., Upper Saddle River, NJ. All rights reserved. This material is protected under all copyright laws as they currently exist. No portion of this material may be reproduced, in any form or by any means, without permission in writing from the publisher.

•21–5. Determine by direct integration the product of inertia I_{xy} for the homogeneous prism. The density of the material is ρ. Express the result in terms of the total mass m of the prism.

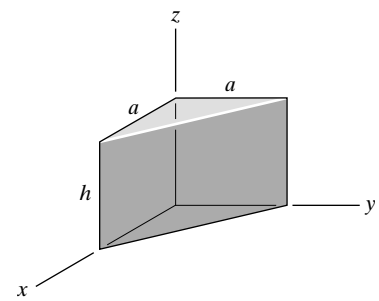

The mass of the differential element is $dm = \rho dV = \rho hxdy = \rho h(a - y)dy$.

$$m = \int_m dm = \rho h \int_0^a (a - y)dy = \frac{\rho a^2 h}{2}$$

Using the parallel axis theorem:

$$dI_{xy} = (dI_{x'y'})_G + dmx_G y_G$$

$$= 0 + (\rho hxdy)\left(\frac{x}{2}\right)(y)$$

$$= \frac{\rho h^2}{2} x^2 ydy$$

$$= \frac{\rho h^2}{2}(y^3 - 2ay^2 + a^2 y)\, dy$$

$$I_{xy} = \frac{\rho h}{2}\int_0^a (y^3 - 2ay^2 + a^2 y)\, dy$$

$$= \frac{\rho a^4 h}{24} = \frac{1}{12}\left(\frac{\rho a^2 h}{2}\right)a^2 = \frac{m}{12}a^2 \qquad \textbf{Ans.}$$

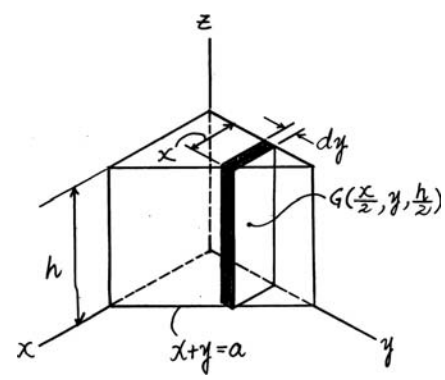

21–6. Determine the product of inertia I_{xy} for the homogeneous tetrahedron. The density of the material is ρ. Express the result in terms of the total mass m of the solid. *Suggestion:* Use a triangular element of thickness dz and then express dI_{xy} in terms of the size and mass of the element using the result of Prob. 21–5.

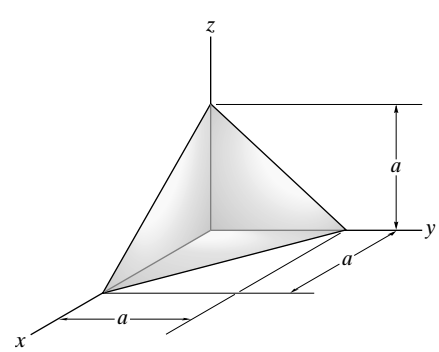

$$dm = \rho\, dV = \rho\left[\frac{1}{2}(a - z)(a - z)\right]dz = \frac{\rho}{2}(a - z)^2\, dz$$

$$m = \frac{\rho}{2}\int_0^a (a^2 - 2az + z^2)dz = \frac{\rho a^3}{6}$$

From Prob. 21–5 the product of inertia of a triangular prism with respect to the xz and yz planes is $I_{xy} = \frac{\rho a^4 h}{24}$. For the element above, $dI_{xy} = \frac{\rho dz}{24}(a - z)^4$. Hence,

$$I_{xy} = \frac{\rho}{24}\int_0^a (a^4 - 4a^3 z + 6z^2 a^2 - 4az^3 + z^4)dz$$

$$I_{xy} = \frac{\rho a^5}{120}$$

or,

$$I_{xy} = \frac{ma^2}{20} \qquad \textbf{Ans.}$$

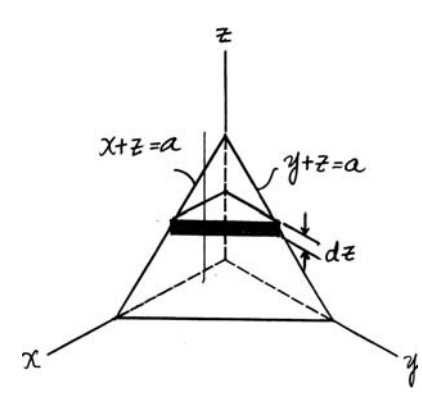

© 2010 Pearson Education, Inc., Upper Saddle River, NJ. All rights reserved. This material is protected under all copyright laws as they currently exist. No portion of this material may be reproduced, in any form or by any means, without permission in writing from the publisher.

21–7. Determine the moments of inertia for the homogeneous cylinder of mass m about the x', y', z' axes.

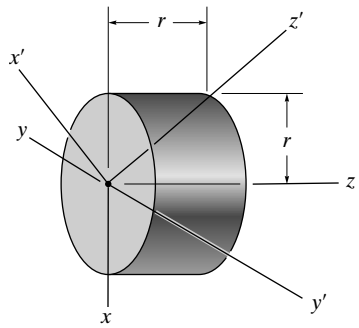

Due to symmetry

$$I_{xy} = I_{yz} = I_{zx} = 0$$

$$I_y = I_x = \frac{1}{12}m(3r^2 + r^2) + m\left(\frac{r}{2}\right)^2 = \frac{7mr^2}{12} \qquad I_z = \frac{1}{2}mr^2$$

For x',

$$u_x = \cos 135° = -\frac{1}{\sqrt{2}}, \qquad u_y = \cos 90° = 0, \qquad u_z = \cos 135° = -\frac{1}{\sqrt{2}}$$

$$I_x = I_x u_x^2 + I_y u_y^2 + I_z u_z^2 - 2I_{xy} u_x u_y - 2I_{yz} u_y u_z - 2I_{zx} u_z u_x$$

$$= \frac{7mr^2}{12}\left(-\frac{1}{\sqrt{2}}\right)^2 + 0 + \frac{1}{2}mr^2\left(-\frac{1}{\sqrt{2}}\right)^2 - 0 - 0 - 0$$

$$= \frac{13}{24}mr^2 \qquad \textbf{Ans.}$$

For y',

$$I_{y'} = I_y = \frac{7mr^2}{12} \qquad \textbf{Ans.}$$

For z',

$$u_x = \cos 135° = -\frac{1}{\sqrt{2}}, \qquad u_y = \cos 90° = 0, \qquad u_z = \cos 45° = \frac{1}{\sqrt{2}}$$

$$I_{z'} = I_x u_x^2 + I_y u_y^2 + I_z u_z^2 - 2I_{xy} u_x u_y - 2I_{yz} u_y u_z - 2I_{zx} u_z u_x$$

$$= \frac{7mr^2}{12}\left(-\frac{1}{\sqrt{2}}\right)^2 + 0 + \frac{1}{2}mr^2\left(-\frac{1}{\sqrt{2}}\right)^2 - 0 - 0 - 0$$

$$= \frac{13}{24}mr^2 \qquad \textbf{Ans.}$$

© 2010 Pearson Education, Inc., Upper Saddle River, NJ. All rights reserved. This material is protected under all copyright laws as they currently exist. No portion of this material may be reproduced, in any form or by any means, without permission in writing from the publisher.

***21–8.** Determine the product of inertia I_{xy} of the homogeneous triangular block. The material has a density of ρ. Express the result in terms of the total mass m of the block.

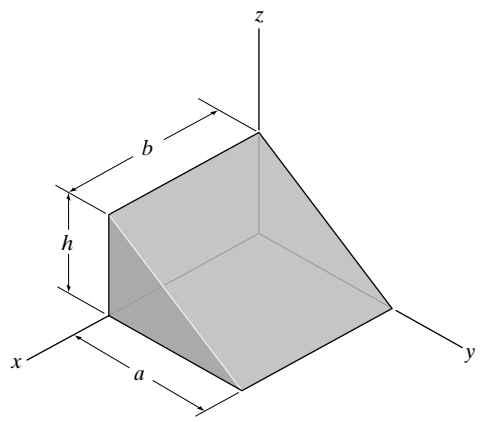

The mass of the differential rectangular volume element shown in Fig. a is $dm = \rho dV = \rho bzdy$. Using the parallel - plane theorem,

$$dI_{xy} = dI_{x'y'} + dmx_G y_G$$

$$= 0 + [\rho bzdy]\left(\frac{b}{2}\right)y$$

$$= \frac{\rho b^2}{2} zydy$$

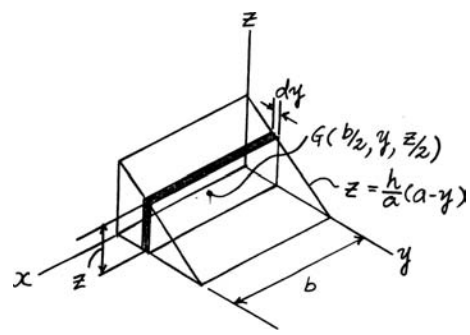

However, $z = \frac{h}{a}(a - y)$. Then

$$dI_{xy} = \frac{\rho b^2}{2}\left[\frac{h}{a}(a - y)y\right]dy = \frac{\rho b^2 h}{2a}\left(ay - y^2\right)dy$$

Thus,

$$I_{xy} = \int dI_{xy} = \frac{\rho b^2 h}{2a}\int_0^a \left(ay - y^2\right)dy$$

$$= \frac{\rho b^2 h}{2a}\left(\frac{ay^2}{2} - \frac{y^3}{3}\right)\Bigg|_0^a$$

$$= \frac{1}{12}\rho a^2 b^2 h$$

However, $m = \rho V = \left(\frac{1}{2}ahb\right) = \frac{1}{2}\rho abh$. Then

$$I_{xy} = \frac{1}{12}\rho a^2 b^2 h\left(\frac{m}{\frac{1}{2}\rho abh}\right) = \frac{1}{6}mab \qquad \textbf{Ans.}$$

© 2010 Pearson Education, Inc., Upper Saddle River, NJ. All rights reserved. This material is protected under all copyright laws as they currently exist. No portion of this material may be reproduced, in any form or by any means, without permission in writing from the publisher.

•21–9. The slender rod has a mass per unit length of 6 kg/m. Determine its moments and products of inertia with respect to the x, y, z axes.

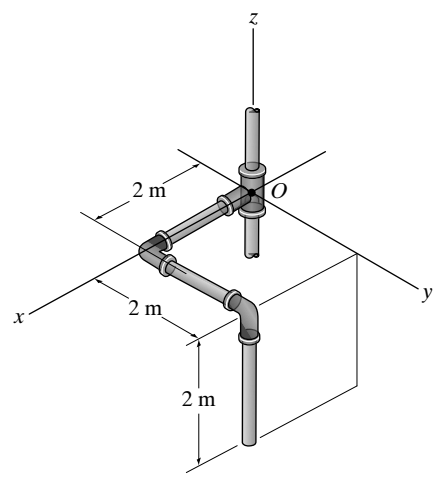

The mass of segments (1), (2), and (3) shown in Fig. *a* is $m_1 = m_2 = m_3 = 6(2) = 12$ kg. The mass moments of inertia of the bent rod about the x, y, and z axes are

$$I_x = \Sigma \bar{I}_{x'} + m\left(y_G{}^2 + z_G{}^2\right)$$

$$= \left(0 + 0\right) + \left[\frac{1}{12}(12)\left(2^2\right) + 12\left(1^2 + 0^2\right)\right] + \left[\frac{1}{12}(12)\left(2^2\right) + 12\left[2^2 + \left(-1\right)^2\right]\right]$$

$$= 80 \text{ kg} \cdot \text{m}^2 \qquad \textbf{Ans.}$$

$$I_y = \Sigma \bar{I}_{y'} + m\left(x_G{}^2 + z_G{}^2\right)$$

$$= \left[\frac{1}{12}(12)\left(2^2\right) + 12\left(1^2 + 0^2\right)\right] + \left[0 + 12\left(2^2 + 0^2\right)\right] + \left[\frac{1}{12}(12)\left(2^2\right) + 12\left[2^2 + \left(-1\right)^2\right]\right]$$

$$= 128 \text{ kg} \cdot \text{m}^2 \qquad \textbf{Ans.}$$

$$I_z = \Sigma \bar{I}_{z'} + m\left(x_G{}^2 + y_G{}^2\right)$$

$$= \left[\frac{1}{12}(12)\left(2^2\right) + 12\left(1^2 + 0^2\right)\right] + \left[\frac{1}{2}(12)\left(2^2\right) + 12\left(2^2 + 1^2\right)\right] + \left[0 + 12\left(2^2 + 2^2\right)\right]$$

$$= 176 \text{ kg} \cdot \text{m}^2 \qquad \textbf{Ans.}$$

Due to symmetry, the products of inertia of segments (1), (2), and (3) with respect to their centroidal planes are equal to zero. Thus,

$$I_{xy} = \Sigma \bar{I}_{x'y'} + m x_G y_G$$

$$= \left[0 + 12(1)(0)\right] + \left[0 + 12(2)(1)\right] + \left[0 + 12(2)(2)\right]$$

$$= 72 \text{ kg} \cdot \text{m}^2 \qquad \textbf{Ans.}$$

$$I_{yz} = \Sigma \bar{I}_{y'z'} + m y_G z_G$$

$$= \left[0 + 12(0)(0)\right] + \left[0 + 12(1)(0)\right] + \left[0 + 12(2)(-1)\right]$$

$$= -24 \text{ kg} \cdot \text{m}^2 \qquad \textbf{Ans.}$$

$$I_{xz} = \Sigma \bar{I}_{x'z'} + m x_G z_G$$

$$= \left[0 + 12(1)(0)\right] + \left[0 + 12(2)(0)\right] + \left[0 + 12(2)(-1)\right]$$

$$= -24 \text{ kg} \cdot \text{m}^2 \qquad \textbf{Ans.}$$

© 2010 Pearson Education, Inc., Upper Saddle River, NJ. All rights reserved. This material is protected under all copyright laws as they currently exist. No portion of this material may be reproduced, in any form or by any means, without permission in writing from the publisher.

21–10. Determine the products of inertia I_{xy}, I_{yz}, and I_{xz} of the homogeneous solid. The material has a density of 7.85 Mg/m^3.

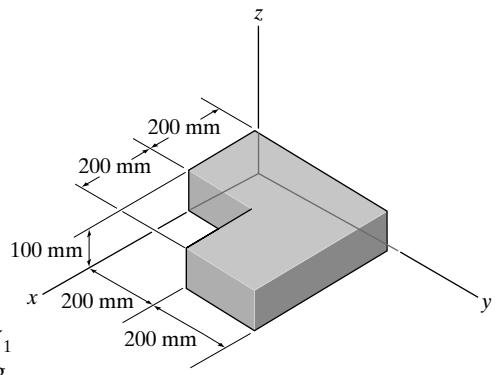

The masses of segments (1) and (2) shown in Fig. *a* are $m_1 = \rho V_1 = 7850(0.4)(0.4)(0.1) = 125.6$ kg and $m_2 = \rho V_2 = 7850(0.2)(0.2)(0.1) = 31.4$ kg. Due to symmetry $\bar{I}_{x'y'} = \bar{I}_{y'z'} = \bar{I}_{x'z'} = 0$ for segment (1) and $\bar{I}_{x''y''} = \bar{I}_{y''z''} = \bar{I}_{x''z''} = 0$ for segment (2). Since segment (2) is a hole, it should be considered as a negative segment. Thus

$$I_{xy} = \Sigma \bar{I}_{x'y'} + m x_G y_G$$

$$= \left[0 + 125.6(0.2)(0.2)\right] - \left[0 + 31.4(0.3)(0.1)\right]$$

$$= 4.08 \text{ kg} \cdot \text{m}^2 \qquad \textbf{Ans.}$$

$$I_{yz} = \Sigma \bar{I}_{y'z'} + m y_G z_G$$

$$= \left[0 + 125.6(0.2)(0.05)\right] - \left[0 + 31.4(0.1)(0.05)\right]$$

$$= 1.10 \text{ kg} \cdot \text{m}^2 \qquad \textbf{Ans.}$$

$$I_{xz} = \Sigma \bar{I}_{x'z'} + m x_G z_G$$

$$= \left[0 + 125.6(0.2)(0.05)\right] - \left[0 + 31.4(0.3)(0.05)\right]$$

$$= 0.785 \text{ kg} \cdot \text{m}^2 \qquad \textbf{Ans.}$$

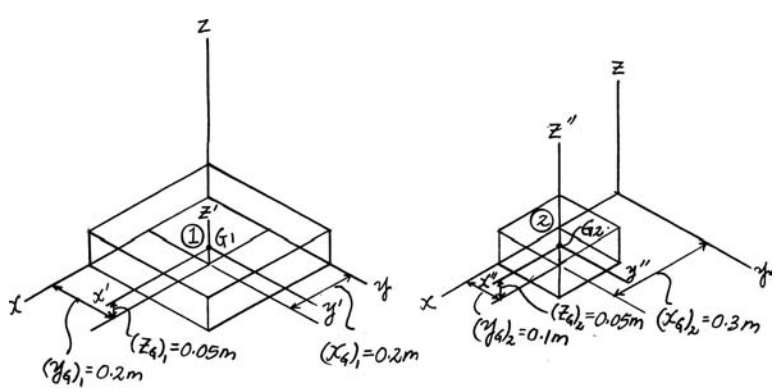

(a)

© 2010 Pearson Education, Inc., Upper Saddle River, NJ. All rights reserved. This material is protected under all copyright laws as they currently exist. No portion of this material may be reproduced, in any form or by any means, without permission in writing from the publisher.

21–11. The assembly consists of two thin plates A and B which have a mass of 3 kg each and a thin plate C which has a mass of 4.5 kg. Determine the moments of inertia I_x, I_y and I_z.

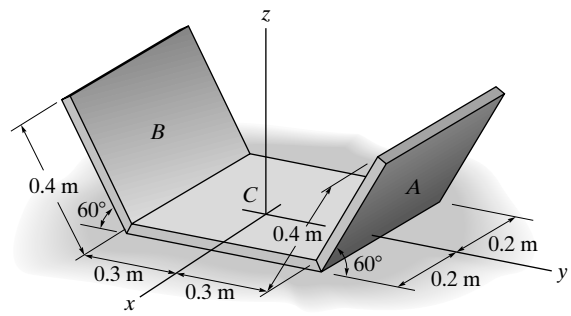

$$I_{x'} = I_{z'} = \frac{1}{12}(3)(0.4)^2 = 0.04\ \text{kg}\cdot\text{m}^2$$

$$I_{y'} = \frac{1}{12}(3)[(0.4)^2 + (0.4)^2] = 0.08\ \text{kg}\cdot\text{m}^2$$

$$I_{x'y'} = I_{z'y'} = I_{z'x'} = 0$$

For z_G,

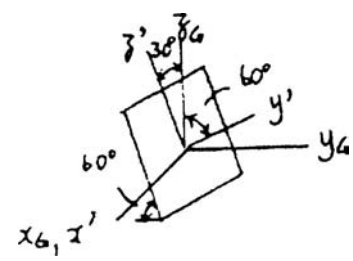

$$u_{x'} = 0$$

$$u_{y'} = \cos 60° = 0.50$$

$$u_{z'} = \cos 30° = 0.8660$$

$$I_{z_G} = 0 + 0.08(0.5)^2 + 0.04(0.866)^2 - 0 - 0 - 0$$

$$= 0.05\ \text{kg}\cdot\text{m}^2$$

$$I_{x_G} = I_{x'} = 0.04\ \text{kg}\cdot\text{m}^2$$

For y_G,

$$u_{x'} = 0$$

$$u_{y'} = \cos 30° = 0.866$$

$$u_{z'} = \cos 120° = -0.50$$

$$I_{y_G} = 0 + 0.08(0.866)^2 + 0.04(-0.5)^2 - 0 - 0 - 0$$

$$= 0.07\ \text{kg}\cdot\text{m}^2$$

$$I_x = \frac{1}{12}(4.5)(0.6)^2 + 2[0.04 + 3\{(0.3 + 0.1)^2 + (0.1732)^2\}]$$

$$I_x = 1.36\ \text{kg}\cdot\text{m}^2 \qquad \textbf{Ans.}$$

$$I_y = \frac{1}{12}(4.5)(0.4)^2 + 2[0.07 + 3(0.1732)^2]$$

$$I_y = 0.380\ \text{kg}\cdot\text{m}^2 \qquad \textbf{Ans.}$$

$$I_z = \frac{1}{12}(4.5)[(0.6)^2 + (0.4)^2] + 2[0.05 + 3(0.3 + 0.1)^2]$$

$$I_z = 1.26\ \text{kg}\cdot\text{m}^2 \qquad \textbf{Ans.}$$

© 2010 Pearson Education, Inc., Upper Saddle River, NJ. All rights reserved. This material is protected under all copyright laws as they currently exist. No portion of this material may be reproduced, in any form or by any means, without permission in writing from the publisher.

***21–12.** Determine the products of inertia I_{xy}, I_{yz}, and I_{xz}, of the thin plate. The material has a density per unit area of 50 kg/m^2.

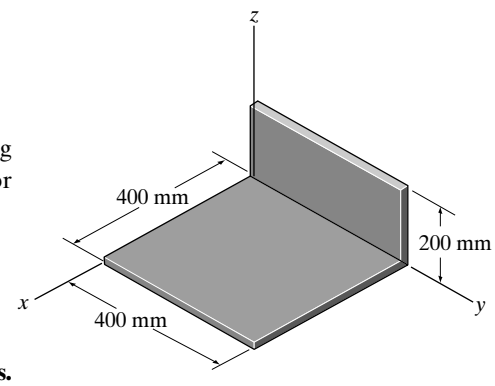

The masses of segments (1) and (2) shown in Fig. *a* are $m_1 = 50(0.4)(0.4) = 8$ kg and $m_2 = 50(0.4)(0.2) = 4$ kg. Due to symmetry $\bar{I}_{x'y'} = \bar{I}_{y'z'} = \bar{I}_{x'z'} = 0$ for segment (1) and $\bar{I}_{x''y''} = \bar{I}_{y''z''} = \bar{I}_{x''z''} = 0$ for segment (2).

$$I_{xy} = \Sigma\bar{I}_{x'y'} + m x_G y_G$$

$$= \left[0 + 8(0.2)(0.2)\right] + \left[0 + 4(0)(0.2)\right]$$

$$= 0.32 \text{ kg}\cdot\text{m}^2 \qquad \textbf{Ans.}$$

$$I_{yz} = \Sigma\bar{I}_{y'z'} + m y_G z_G$$

$$= \left[0 + 8(0.2)(0)\right] + \left[0 + 4(0.2)(0.1)\right]$$

$$= 0.08 \text{ kg}\cdot\text{m}^2 \qquad \textbf{Ans.}$$

$$I_{xz} = \Sigma\bar{I}_{x'z'} + m x_G z_G$$

$$= \left[0 + 8(0.2)(0)\right] + \left[0 + 4(0)(0.1)\right]$$

$$= 0 \qquad \textbf{Ans.}$$

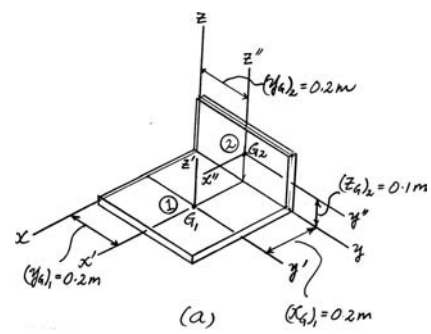

(a)

•21–13. The bent rod has a weight of 1.5 lb/ft. Locate the center of gravity $G(\bar{x}, \bar{y})$ and determine the principal moments of inertia $I_{x'}$, $I_{y'}$, and $I_{z'}$ of the rod with respect to the x', y', z' axes.

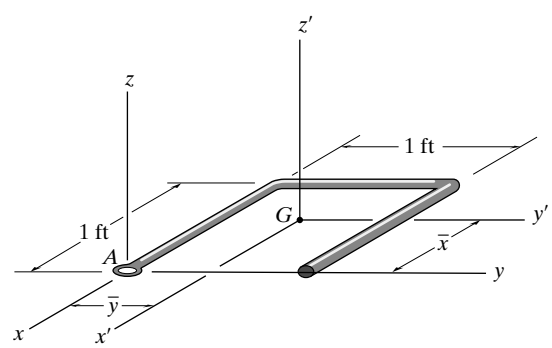

Due to symmetry

$$\bar{y} = 0.5 \text{ ft} \qquad \textbf{Ans.}$$

$$\bar{x} = \frac{\Sigma\bar{x}W}{\Sigma w} = \frac{(-1)(1.5)(1) + 2\left[(-0.5)(1.5)(1)\right]}{3\left[1.5(1)\right]} = -0.667 \text{ ft} \qquad \textbf{Ans.}$$

$$I_{x'} = 2\left[\left(\frac{1.5}{32.2}\right)(0.5)^2\right] + \frac{1}{12}\left(\frac{1.5}{32.2}\right)(1)^2$$

$$= 0.0272 \text{ slug}\cdot\text{ft}^2 \qquad \textbf{Ans.}$$

$$I_{y'} = 2\left[\frac{1}{12}\left(\frac{1.5}{32.2}\right)(1)^2 + \left(\frac{1.5}{32.2}\right)(0.667 - 0.5)^2\right] + \left(\frac{1.5}{32.2}\right)(1 - 0.667)^2$$

$$= 0.0155 \text{ slug}\cdot\text{ft}^2 \qquad \textbf{Ans.}$$

$$I_{z'} = 2\left[\frac{1}{12}\left(\frac{1.5}{32.2}\right)(1)^2 + \left(\frac{1.5}{32.2}\right)(0.5^2 + 0.1667^2)\right]$$

$$+ \frac{1}{12}\left(\frac{1.5}{32.2}\right)(1)^2 + \left(\frac{1.5}{32.2}\right)(0.3333)^2$$

$$= 0.0427 \text{ slug}\cdot\text{ft}^2 \qquad \textbf{Ans.}$$

© 2010 Pearson Education, Inc., Upper Saddle River, NJ. All rights reserved. This material is protected under all copyright laws as they currently exist. No portion of this material may be reproduced, in any form or by any means, without permission in writing from the publisher.

21–14. The assembly consists of a 10-lb slender rod and a 30-lb thin circular disk. Determine its moment of inertia about the y' axis.

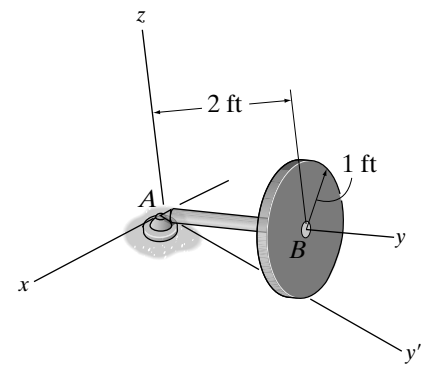

The mass of moment inertia of the assembly about the x, y, and z axes are

$$I_x = I_z = \left[\frac{1}{4}\left(\frac{30}{32.2}\right)(1^2) + \frac{30}{32.2}(2^2)\right] + \left[\frac{1}{12}\left(\frac{10}{32.2}\right)(2^2) + \frac{10}{32.2}(1^2)\right]$$

$$= 4.3737 \text{ slug}\cdot\text{ft}^2$$

$$I_y = \frac{1}{2}\left(\frac{30}{32.2}\right)(1^2) + 0 = 0.4658 \text{ slug}\cdot\text{ft}^2$$

Due to symmetry, $I_{xy} = I_{yz} = I_{xz} = 0$. From the geometry shown in Fig. a, $\theta = \tan^{-1}\left(\frac{1}{2}\right) = 26.57°$. Thus, the direction of the y' axis is defined by the unit vector

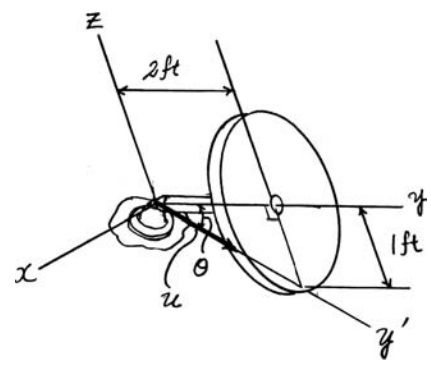

(a)

$$\mathbf{u} = \cos 26.57°\mathbf{j} - \sin 26.57°\mathbf{k} = 0.8944\mathbf{j} - 0.4472\mathbf{k}$$

Thus,

$$u_x = 0 \qquad u_y = 0.8944 \qquad u_z = -0.4472$$

Then

$$I_{y'} = I_x u_x{}^2 + I_y u_y{}^2 + I_z u_z{}^2 - 2I_{xy}\, u_x u_y - 2I_{yz}\, u_y u_z - 2I_{xz} u_x u_z$$

$$= 4.3737(0) + 0.4658(0.8944)^2 + 4.3737(-0.4472)^2 - 0 - 0 - 0$$

$$= 1.25 \text{ slug}\cdot\text{ft}^2 \qquad \textbf{Ans.}$$

21–15. The top consists of a cone having a mass of 0.7 kg and a hemisphere of mass 0.2 kg. Determine the moment of inertia I_z when the top is in the position shown.

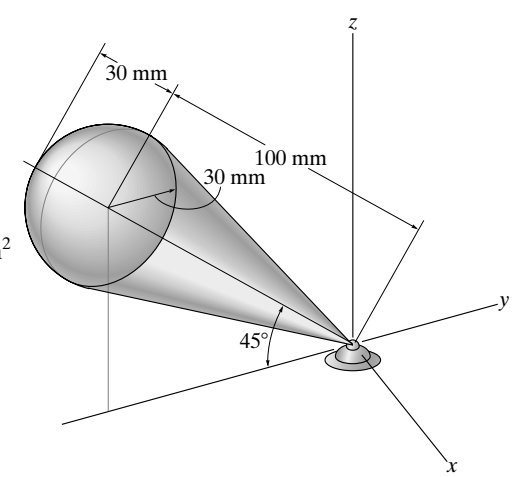

$$I_{x'} = I_{y'} = \frac{3}{80}(0.7)\left[(4)(0.3)^2 + (0.1)^2\right] + (0.7)\left[\frac{3}{4}(0.1)\right]^2$$

$$+ \left(\frac{83}{320}\right)(0.2)(0.03)^2 + (0.2)\left[\frac{3}{8}(0.03) + (0.1)\right]^2 = 6.816\left(10^{-3}\right)\text{kg}\cdot\text{m}^2$$

$$I_{z'} = \left(\frac{3}{10}\right)(0.7)(0.03)^2 + \left(\frac{2}{5}\right)(0.2)(0.03)^2$$

$$I_z = 0.261\left(10^{-3}\right)\text{kg}\cdot\text{m}^2$$

$$u_x = \cos 90° = 0, \qquad u_{y'} = \cos 45° = 0.7071, \qquad u_{z'} = \cos 45° = 0.7071$$

$$I_z = I_{x'} u_{x'}^2 + I_{y'} u_{y'}^2 + I_{z'} u_{z'}^2 - 2I_{x'y'} u_{x'} u_{y'} - 2I_{y'z'} u_{y'} u_{z'} - 2I_{x'z'} u_{x'} u_{z'}$$

$$= 0 + 6.816\left(10^{-3}\right)(0.7071)^2 + (0.261)\left(10^{-3}\right)(0.7071)^2 - 0 - 0 - 0$$

$$I_z = 3.54\left(10^{-3}\right)\text{kg}\cdot\text{m}^2 \qquad \textbf{Ans.}$$

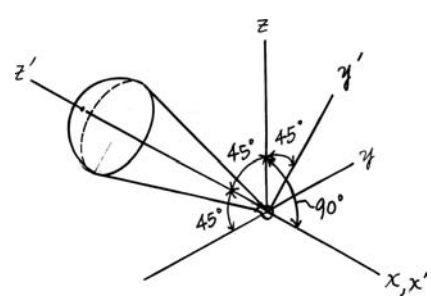

© 2010 Pearson Education, Inc., Upper Saddle River, NJ. All rights reserved. This material is protected under all copyright laws as they currently exist. No portion of this material may be reproduced, in any form or by any means, without permission in writing from the publisher.

***21–16.** Determine the products of inertia I_{xy}, I_{yz}, and I_{xz} of the thin plate. The material has a mass per unit area of 50 kg/m^2.

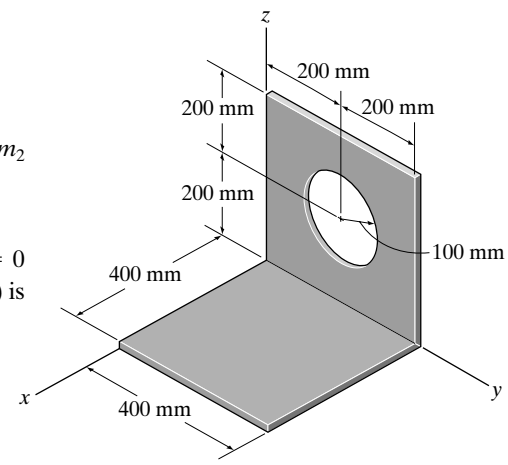

The masses of segments (1), (2), and (3) shown in Fig. *a* are $m_1 = m_2 = 50(0.4)(0.4) = 8$ kg and $m_3 = 50\left[\pi(0.1)^2\right] = 0.5\pi$ kg.

Due to symmetry $\bar{I}_{x'y'} = \bar{I}_{y'z'} = \bar{I}_{x'z'} = 0$ for segment (1), $\bar{I}_{x''y''} = \bar{I}_{y''z''} = \bar{I}_{x''z''} = 0$ for segment (2), and $\bar{I}_{x'''y'''} = \bar{I}_{y'''z'''} = \bar{I}_{x'''z'''} = 0$ for segment (3). Since segment (3) is a hole, it should be considered as a negative segment. Thus

$$I_{xy} = \Sigma\bar{I}_{x'y'} + mx_G y_G$$
$$= \left[0 + 8(0.2)(0.2)\right] + \left[0 + 8(0)(0.2)\right] - \left[0 + 0.5\pi(0)(0.2)\right]$$
$$= 0.32 \text{ kg}\cdot\text{m}^2 \qquad \textbf{Ans.}$$

$$I_{yz} = \Sigma\bar{I}_{y'z'} + my_G z_G$$
$$= \left[0 + 8(0.2)(0)\right] + \left[0 + 8(0.2)(0.2)\right] - \left[0 + 0.5\pi(0.2)(0.2)\right]$$
$$= 0.257 \text{ kg}\cdot\text{m}^2 \qquad \textbf{Ans.}$$

$$I_{xz} = \Sigma\bar{I}_{x'z'} + mx_G z_G$$
$$= \left[0 + 8(0.2)(0)\right] + \left[0 + 8(0)(0.2)\right] - \left[0 + 0.5\pi(0)(0.2)\right]$$
$$= 0 \text{ kg}\cdot\text{m}^2 \qquad \textbf{Ans.}$$

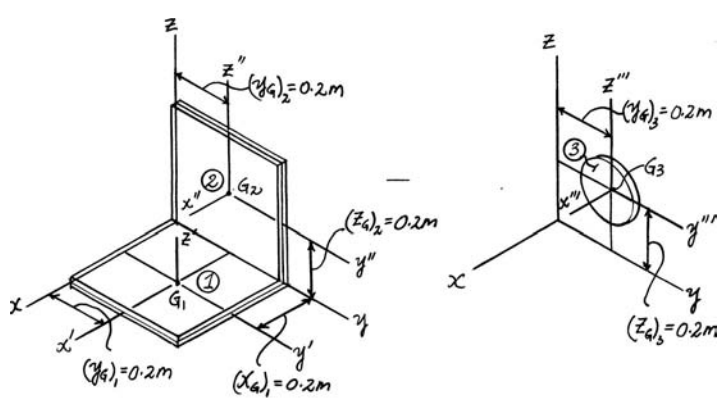

(*a*)

•21–17. Determine the product of inertia I_{xy} for the bent rod. The rod has a mass per unit length of 2 kg/m.

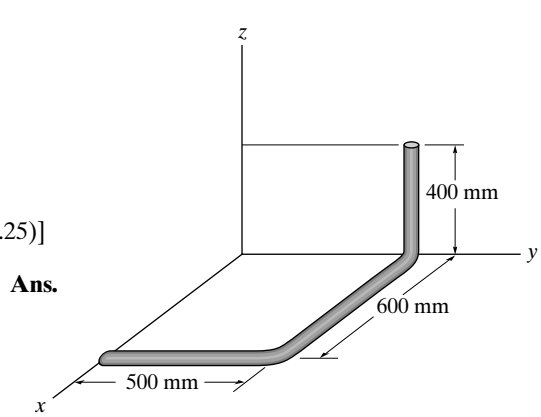

Product of Inertia: Applying Eq. 21–4. we have

$$I_{xy} = \Sigma\left(I_{x'y'}\right)_G + mx_G\, y_G$$
$$= [0 + 0.4\,(2)\,(0)\,(0.5)] + [0 + 0.6\,(2)\,(0.3)\,(0.5)] + [0 + 0.5\,(2)\,(0.6)\,(0.25)]$$
$$= 0.330 \text{ kg}\cdot\text{m}^2 \qquad \textbf{Ans.}$$

© 2010 Pearson Education, Inc., Upper Saddle River, NJ. All rights reserved. This material is protected under all copyright laws as they currently exist. No portion of this material may be reproduced, in any form or by any means, without permission in writing from the publisher.

21–18. Determine the moments of inertia I_{xx}, I_{yy}, I_{zz} for the bent rod. The rod has a mass per unit length of 2 kg/m.

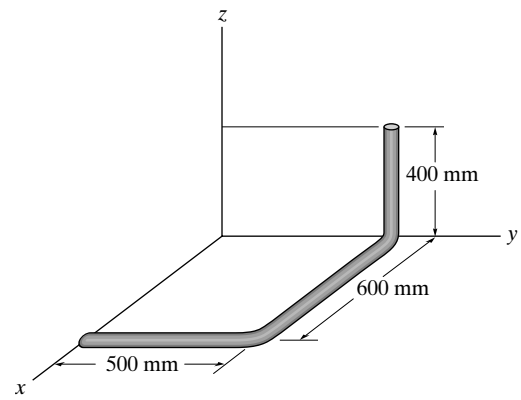

Moments of Inertia: Applying Eq. 21–3, we have

$$I_{xx} = \Sigma(I_{x'x'})_G + m(y_G^2 + z_G^2)$$

$$= \left[\frac{1}{12}(0.4)(2)\left(0.4^2\right) + 0.4(2)\left(0.5^2 + 0.2^2\right)\right]$$

$$+ \left[0 + 0.6(2)\left(0.5^2 + 0^2\right)\right]$$

$$+ \left[\frac{1}{12}(0.5)(2)\left(0.5^2\right) + 0.5(2)\left(0.25^2 + 0^2\right)\right]$$

$$= 0.626\ \text{kg}\cdot\text{m}^2 \qquad \textbf{Ans.}$$

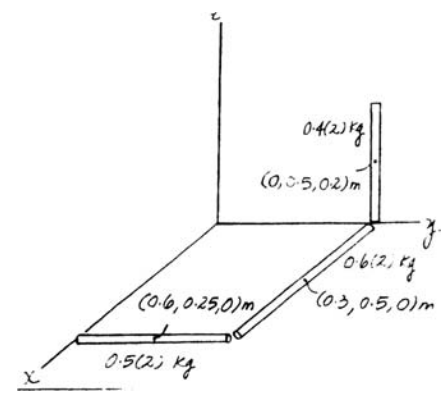

$$I_{xy} = \Sigma(I_{y'y'})_G + m(x_G^2 + z_G^2)$$

$$= \left[\frac{1}{12}(0.4)(2)\left(0.4^2\right) + 0.4(2)\left(0^2 + 0.2^2\right)\right]$$

$$+ \left[\frac{1}{12}(0.6)(2)\left(0.6^2\right) + 0.6(2)\left(0.3^2 + 0^2\right)\right]$$

$$+ \left[0 + 0.5(2)\left(0.6^2 + 0^2\right)\right]$$

$$= 0.547\ \text{kg}\cdot\text{m}^2 \qquad \textbf{Ans.}$$

$$I_{zz} = \Sigma(I_{z'z'})_G + m(x_G^2 + y_G^2)$$

$$= \left[0 + 0.4(2)\left(0^2 + 0.5^2\right)\right]$$

$$+ \left[\frac{1}{12}(0.6)(2)\left(0.6^2\right) + 0.6(2)\left(0.3^2 + 0.5^2\right)\right]$$

$$+ \left[\frac{1}{12}(0.5)(2)\left(0.5^2\right) + 0.5(2)\left(0.6^2 + 0.25^2\right)\right]$$

$$= 1.09\ \text{kg}\cdot\text{m}^2 \qquad \textbf{Ans.}$$

© 2010 Pearson Education, Inc., Upper Saddle River, NJ. All rights reserved. This material is protected under all copyright laws as they currently exist. No portion of this material may be reproduced, in any form or by any means, without permission in writing from the publisher.

21–19. Determine the moment of inertia of the rod-and-thin-ring assembly about the z axis. The rods and ring have a mass per unit length of 2 kg/m.

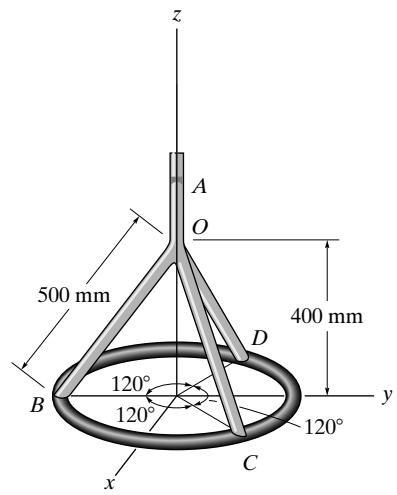

For the rod,

$$u_{x'} = 0.6, \qquad u_{y'} = 0, \qquad u_{z'} = 0.8$$

$$I_x = I_y = \frac{1}{3}[(0.5)(2)](0.5)^2 = 0.08333 \text{ kg} \cdot \text{m}^2$$

$$I_{x'} = 0$$

$$I_{x'y'} = I_{y'z'} = I_{x'z'} = 0$$

From Eq. 21–5,

$$I_z = 0.08333(0.6)^2 + 0 + 0 - 0 - 0 - 0$$

$$I_z = 0.03 \text{ kg} \cdot \text{m}^2$$

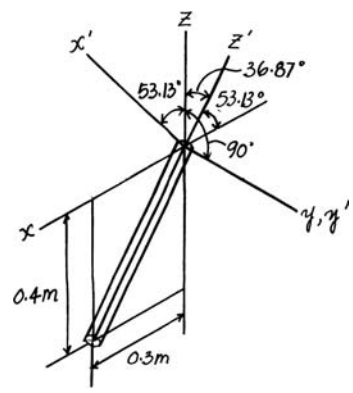

For the ring,

The radius is $r = 0.3$ m

Thus,

$$I_z = mR^2 = [2\,(2\pi)(0.3)](0.3)^2 = 0.3393 \text{ kg} \cdot \text{m}^2$$

Thus the moment of inertia of the assembly is

$$I_z = 3(0.03) + 0.339 = 0.429 \text{ kg} \cdot \text{m}^2 \qquad \textbf{Ans.}$$

© 2010 Pearson Education, Inc., Upper Saddle River, NJ. All rights reserved. This material is protected under all copyright laws as they currently exist. No portion of this material may be reproduced, in any form or by any means, without permission in writing from the publisher.

***21–20.** If a body contains *no planes of symmetry,* the principal moments of inertia can be determined mathematically. To show how this is done, consider the rigid body which is spinning with an angular velocity $\boldsymbol{\omega}$, directed along one of its principal axes of inertia. If the principal moment of inertia about this axis is I, the angular momentum can be expressed as $\mathbf{H} = I\boldsymbol{\omega} = I\omega_x\mathbf{i} + I\omega_y\mathbf{j} + I\omega_z\mathbf{k}$. The components of $\mathbf{H}$ may also be expressed by Eqs. 21–10, where the inertia tensor is assumed to be known. Equate the $\mathbf{i}$, $\mathbf{j}$, and $\mathbf{k}$ components of both expressions for $\mathbf{H}$ and consider ω_x, ω_y, and ω_z to be unknown. The solution of these three equations is obtained provided the determinant of the coefficients is zero. Show that this determinant, when expanded, yields the cubic equation

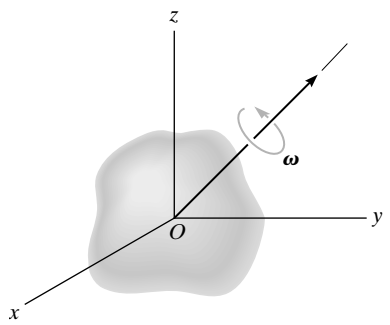

$$I^3 - (I_{xx} + I_{yy} + I_{zz})I^2 + (I_{xx}I_{yy} + I_{yy}I_{zz} + I_{zz}I_{xx} - I_{xy}^2 - I_{yz}^2 - I_{zx}^2)I - (I_{xx}I_{yy}I_{zz} - 2I_{xy}I_{yz}I_{zx} - I_{xx}I_{yz}^2 - I_{yy}I_{zx}^2 - I_{zz}I_{xy}^2) = 0$$

The three positive roots of I, obtained from the solution of this equation, represent the principal moments of inertia I_x, I_y, and I_z.

$$\mathbf{H} = I\omega = I\omega_x\,\mathbf{i} + I\omega_y\,\mathbf{j} + I\omega_z\,\mathbf{k}$$

Equating the $\mathbf{i}, \mathbf{j}, \mathbf{k}$ components to the scalar equations (Eq. 21–10) yields

$$(I_{xx} - I)\,\omega_x - I_{xy}\,\omega_y - I_{xz}\,\omega_z = 0$$

$$-I_{xx}\,\omega_x + (I_{xy} - I)\,\omega_y - I_{yz}\,\omega_z = 0$$

$$-I_{zx}\,\omega_z - I_{zy}\,\omega_y + (I_{zz} - I)\,\omega_z = 0$$

Solution for ω_x, ω_y, and ω_z requires

$$\begin{vmatrix} (I_{xx} - I) & -I_{xy} & -I_{xz} \\ -I_{yx} & (I_{yy} - I) & -I_{yz} \\ -I_{zx} & -I_{zy} & (I_{zz} - I) \end{vmatrix} = 0$$

Expanding

$$I^3 - (I_{xx} + I_{yy} + I_{zz})I^2 + \left(I_{xx}I_{yy} + I_{yy}I_{zz} + I_{zz}I_{xx} - I_{xy}^2 - I_{yz}^2 - I_{zx}^2\right)I - \left(I_{xx}I_{yy}I_{zz} - 2I_{xy}I_{yz}I_{zx} - I_{xx}I_{yz}^2 - I_{yy}I_{zx}^2 - I_{zz}I_{xy}^2\right) = 0 \quad \textbf{Q.E.D.}$$

© 2010 Pearson Education, Inc., Upper Saddle River, NJ. All rights reserved. This material is protected under all copyright laws as they currently exist. No portion of this material may be reproduced, in any form or by any means, without permission in writing from the publisher.

•21–21. Show that if the angular momentum of a body is determined with respect to an arbitrary point A, then $\mathbf{H}_A$ can be expressed by Eq. 21–9. This requires substituting $\boldsymbol{\rho}_A = \boldsymbol{\rho}_G + \boldsymbol{\rho}_{G/A}$ into Eq. 21–6 and expanding, noting that $\int \boldsymbol{\rho}_G\, dm = \mathbf{0}$ by definition of the mass center and $\mathbf{v}_G = \mathbf{v}_A + \boldsymbol{\omega} \times \boldsymbol{\rho}_{G/A}$.

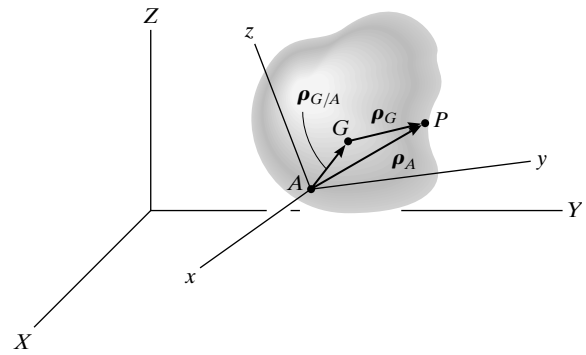

$$\mathbf{H}_A = \left(\int_m \rho_A\, dm\right) \times \mathbf{v}_A + \int_m \rho_A \times (\omega \times \rho_A) dm$$

$$= \left(\int_m (\rho_G + \rho_{G/A})\, dm\right) \times \mathbf{v}_A + \int_m (\rho_G + \rho_{G/A}) \times \left[\omega \times \rho_G + \rho_{G/A})\right] dm$$

$$= \left(\int_m \rho_G\, dm\right) \times \mathbf{v}_A + (\rho_{G/A} \times \mathbf{v}_A) \int_m dm + \int_m \rho_G \times (\omega \times \rho_G)\, dm$$

$$+ \left(\int_m \rho_G dm\right) \times (\omega \times \rho_{G/A}) + \rho_{G/A} \times \left(\omega \times \int_m \rho_G\, dm\right) + \rho_{G/A} \times (\omega \times \rho_{G/A}) \int_m dm$$

Since $\int_m \rho_G\, dm = 0$ and from Eq. 21–8 $\mathbf{H}_G = \int_m \rho_G \times (\omega \times \rho_G) dm$

$$\mathbf{H}_A = (\rho_{G/A} \times \mathbf{v}_A)m + \mathbf{H}_G + \rho_{G/A} \times (\omega \times \rho_{G/A})m$$

$$= \rho_{G/A} \times (\mathbf{v}_A + (\omega \times \rho_{G/A}))m + \mathbf{H}_G$$

$$= (\rho_{G/A} \times m\mathbf{v}_G) + \mathbf{H}_G \qquad \textbf{Q.E.D.}$$

© 2010 Pearson Education, Inc., Upper Saddle River, NJ. All rights reserved. This material is protected under all copyright laws as they currently exist. No portion of this material may be reproduced, in any form or by any means, without permission in writing from the publisher.

21–22. The 4-lb rod AB is attached to the disk and collar using ball-and-socket joints. If the disk has a constant angular velocity of 2 rad/s, determine the kinetic energy of the rod when it is in the position shown. Assume the angular velocity of the rod is directed perpendicular to the axis of the rod.

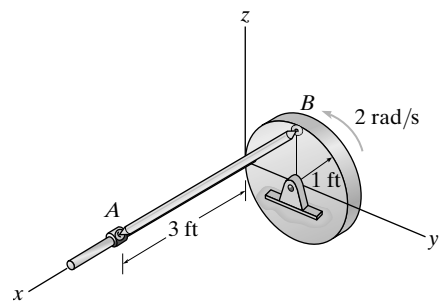

$$\mathbf{v}_A = \mathbf{v}_B + \omega \times \mathbf{r}_{A/B}$$

$$v_A\mathbf{i} = -(1)(2)\mathbf{j} + \begin{vmatrix} \mathbf{i} & \mathbf{j} & \mathbf{k} \\ \omega_x & \omega_y & \omega_z \\ 3 & -1 & -1 \end{vmatrix}$$

Expand and equate components:

$$v_A = -\omega_y + \omega_z \qquad \textbf{(1)}$$

$$2 = \omega_x + 3\,\omega_z \qquad \textbf{(2)}$$

$$0 = -\omega_x - 3\,\omega_y \qquad \textbf{(3)}$$

Also:

$$\omega \cdot \mathbf{r}_{A/B} = 0$$

$$3\omega_x - \omega_y - \omega_z = 0 \qquad \textbf{(4)}$$

Solving Eqs. (1)–(4):

$$\omega_x = 0.1818 \text{ rad/s}$$

$$\omega_y = -0.06061 \text{ rad/s}$$

$$\omega_z = 0.6061 \text{ rad/s}$$

$$v_A = 0.667 \text{ ft/s}$$

ω is perpendicular to the rod.

$$\omega_z = 0.1818 \text{ rad/s}, \qquad \omega_y = -0.06061 \text{ rad/s}, \qquad \omega_z = 0.6061 \text{ rad/s}$$

$$\mathbf{v}_B = \{-2\mathbf{j}\} \text{ ft/s}$$

$$\mathbf{r}_{A/B} = \{3\mathbf{i} - 1\mathbf{j} - 1\mathbf{k}\} \text{ ft}$$

$$\mathbf{v}_G = \mathbf{v}_B + \omega \times \frac{\mathbf{r}_{A/B}}{2}$$

$$\mathbf{v}_G = -2\mathbf{j} + \frac{1}{2}\begin{vmatrix} \mathbf{i} & \mathbf{j} & \mathbf{k} \\ 0.1818 & -0.06061 & 0.6061 \\ 3 & -1 & -1 \end{vmatrix}$$

$$\mathbf{v}_G = \{0.333\mathbf{i} - 1\mathbf{j}\} \text{ ft/s}$$

$$v_G = \sqrt{(0.333)^2 + (-1)^2} = 1.054 \text{ ft/s}$$

$$\omega = \sqrt{(0.1818)^2 + (-0.06061)^2 + (0.6061)^2} = 0.6356 \text{ rad/s}$$

$$T = \left(\frac{1}{2}\right)\left(\frac{4}{32.2}\right)(1.054)^2 + \left(\frac{1}{2}\right)\left[\frac{1}{12}\left(\frac{4}{32.2}\right)(3.3166)^2\right](0.6356)^2$$

$$T = 0.0920 \text{ ft} \cdot \text{lb} \qquad \textbf{Ans.}$$

© 2010 Pearson Education, Inc., Upper Saddle River, NJ. All rights reserved. This material is protected under all copyright laws as they currently exist. No portion of this material may be reproduced, in any form or by any means, without permission in writing from the publisher.

21–23. Determine the angular momentum of rod AB in Prob. 21–22 about its mass center at the instant shown. Assume the angular velocity of the rod is directed perpendicular to the axis of the rod.

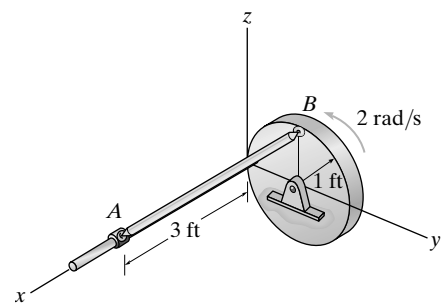

$$\mathbf{v}_A = \mathbf{v}_B + \omega \times \mathbf{r}_{A/B}$$

$$v_A\mathbf{i} = -(1)(2)\mathbf{j} + \begin{vmatrix} \mathbf{i} & \mathbf{j} & \mathbf{k} \\ \omega_x & \omega_y & \omega_z \\ 3 & -1 & -1 \end{vmatrix}$$

Expand and equate components:

$$v_A = -\omega_y + \omega_z \qquad \textbf{(1)}$$

$$2 = \omega_x + 3\,\omega_z \qquad \textbf{(2)}$$

$$0 = -\omega_x - 3\,\omega_y \qquad \textbf{(3)}$$

Also:

$$\omega \cdot \mathbf{r}_{A/B} = 0$$

$$3\omega_x - \omega_y - \omega_z = 0 \qquad \textbf{(4)}$$

Solving Eqs. (1)–(4):

$$\omega_x = 0.1818 \text{ rad/s}$$

$$\omega_y = -0.06061 \text{ rad/s}$$

$$\omega_z = 0.6061 \text{ rad/s}$$

$$v_A = 0.667 \text{ ft/s}$$

ω is perpendicular to the rod.

$$r_{A/B} = \sqrt{(3)^2 + (-1)^2 + (-1)^2} = 3.3166 \text{ ft}$$

$$I_G = \left(\frac{1}{12}\right)\left(\frac{4}{32.2}\right)(3.3166)^2 = 0.1139 \text{ slug} \cdot \text{ft}^2$$

$$\mathbf{H}_G = I_G\,\omega = 0.1139\,(0.1818\mathbf{i} - 0.06061\mathbf{j} + 0.6061\mathbf{k})$$

$$\mathbf{H}_G = \{0.0207\mathbf{i} - 0.00690\mathbf{j} + 0.0690\mathbf{k}\} \text{ slug} \cdot \text{ft}^2/\text{s} \qquad \textbf{Ans.}$$

© 2010 Pearson Education, Inc., Upper Saddle River, NJ. All rights reserved. This material is protected under all copyright laws as they currently exist. No portion of this material may be reproduced, in any form or by any means, without permission in writing from the publisher.

***21–24.** The uniform thin plate has a mass of 15 kg. Just before its corner A strikes the hook, it is falling with a velocity of $\mathbf{v}_G = \{-5\mathbf{k}\}$ m/s with no rotational motion. Determine its angular velocity immediately after corner A strikes the hook without rebounding.

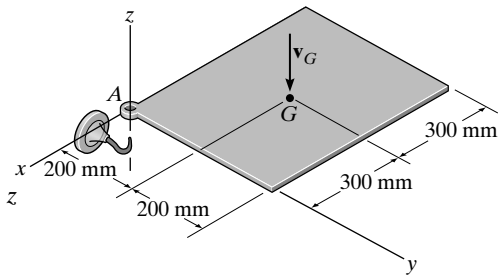

Referring to Fig. a, the mass moments of inertia of the plate about the x, y, and z axes are

$$I_x = I_{x'} + m\left(y_G{}^2 + z_G{}^2\right) = \frac{1}{12}(15)\left(0.4^2\right) + 15\left(0.2^2 + 0^2\right) = 0.8\ \text{kg}\cdot\text{m}^2$$

$$I_y = I_{y'} + m\left(x_G{}^2 + z_G{}^2\right) = \frac{1}{12}(15)\left(0.6^2\right) + 15\left[(-0.3)^2 + 0^2\right] = 1.8\ \text{kg}\cdot\text{m}^2$$

$$I_z = I_{z'} + m\left(x_G{}^2 + y_G{}^2\right) = \frac{1}{12}(15)\left(0.4^2 + 0.6^2\right) + 15\left[(-0.3)^2 + 0.2^2\right] = 2.6\ \text{kg}\cdot\text{m}^2$$

Due to symmetry, $I_{x'y'} = I_{y'z'} = I_{x'z'} = 0$. Thus,

$$I_{xy} = I_{x'y'} + mx_Gy_G = 0 + 15(-0.3)(0.2) = -0.9\ \text{kg}\cdot\text{m}^2$$

$$I_{yz} = I_{y'z'} + my_Gz_G = 0 + 15(0.2)(0) = 0$$

$$I_{xz} = I_{x'z'} + mx_Gz_G = 0 + 15(-0.3)(0) = 0$$

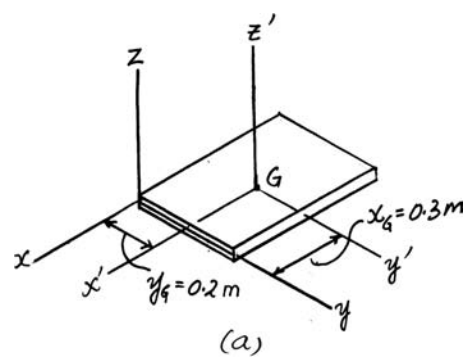

Since the plate falls without rotational motion just before the impact, its angular momentum about point A is

$$(\mathbf{H}_A)_1 = \mathbf{r}_{G/A} \times m\mathbf{v}_G = (-0.3\mathbf{i} + 0.2\mathbf{j}) \times 15(-5\mathbf{k})$$
$$= [-15\mathbf{i} - 22.5\mathbf{j}]\ \text{kg}\cdot\text{m}^2/\text{s}$$

Since the plate rotates about point A just after impact, the components of its angular momentum at this instant can be determined from

$$\left[(H_A)_2\right]_x = I_x\omega_x - I_{xy}\omega_y - I_{xz}\omega_z$$
$$= 0.8\omega_x - (-0.9)\omega_y - 0(\omega_z)$$
$$= 0.8\omega_x + 0.9\omega_y$$
$$\left[(H_A)_2\right]_y = -I_{xy}\omega_x + I_y\omega_y - I_{yz}\omega_z$$
$$= -(-0.9)\omega_x + 1.8\omega_y - 0(\omega_z)$$
$$= 0.9\omega_x + 1.8\omega_y$$
$$\left[(H_A)_2\right]_z = -I_{xz}\omega_x + I_{yz}\omega_y - I_z\omega_z$$
$$= 0(\omega_x) - 0(\omega_y) + 2.6\omega_z$$
$$= 2.6\omega_z$$

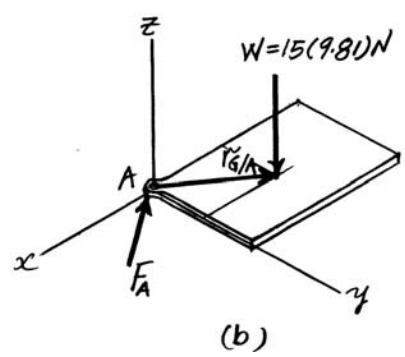

Thus,

$$(\mathbf{H}_A)_2 = (0.8\omega_x + 0.9\omega_y)\mathbf{i} + (0.9\omega_x + 1.8\omega_y)\mathbf{j} + 2.6\omega_z\mathbf{k}$$

Referring to the free-body diagram of the plate shown in Fig. b, the weight $\mathbf{W}$ is a nonimpulsive force and the impulsive force $\mathbf{F}_A$ acts through point A. Therefore, angular momentum of the plate is conserved about point A. Thus,

$$(\mathbf{H}_A)_1 = (\mathbf{H}_A)_2$$
$$-15\mathbf{i} - 22.5\mathbf{j} = (0.8\omega_x + 0.9\omega_y)\mathbf{i} + (0.9\omega_x + 1.8\omega_y)\mathbf{j} + 2.6\omega_z\mathbf{k}$$

Equating the $\mathbf{i}$, $\mathbf{j}$, and $\mathbf{k}$ components,

$$-15 = 0.8\omega_x + 0.9\omega_y \qquad \textbf{(1)}$$
$$-22.5 = 0.9\omega_x + 1.8\omega_y \qquad \textbf{(2)}$$
$$0 = 2.6\omega_z \qquad \textbf{(3)}$$

Solving Eqs. (1) through (3),

$$\omega_x = -10.71\ \text{rad/s} \qquad \omega_y = -7.143\ \text{rad/s} \qquad \omega_z = 0$$

Thus,

$$\omega = [-10.7\mathbf{i} - 7.14\mathbf{j}]\ \text{rad/s} \qquad \textbf{Ans.}$$

© 2010 Pearson Education, Inc., Upper Saddle River, NJ. All rights reserved. This material is protected under all copyright laws as they currently exist. No portion of this material may be reproduced, in any form or by any means, without permission in writing from the publisher.

•21–25. The 5-kg disk is connected to the 3-kg slender rod. If the assembly is attached to a ball-and-socket joint at A and the 5-N · m couple moment is applied, determine the angular velocity of the rod about the z axis after the assembly has made two revolutions about the z axis starting from rest. The disk rolls without slipping.

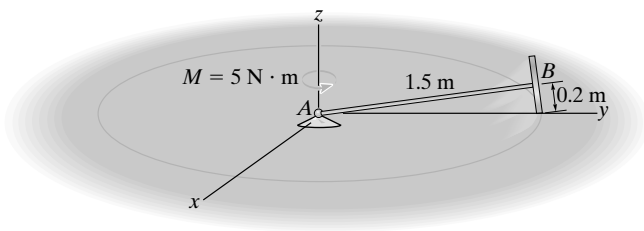

$$I_x = I_z = \frac{1}{4}(5)(0.2)^2 + 5(1.5)^2 + \frac{1}{3}(3)(1.5)^2 = 13.55$$

$$I_y = \frac{1}{2}(5)(0.2)^2 = 0.100$$

$$\omega = -\omega_y \mathbf{j}' + \omega_z \mathbf{k} = -\omega_{y'} \mathbf{j}' + \omega_z \sin 7.595°\mathbf{j}' + \omega_z \cos 7.595°\mathbf{k}'$$

$$= (0.13216\omega_z - \omega_{y'})\mathbf{j}' + 0.99123\,\omega_z \mathbf{k}'$$

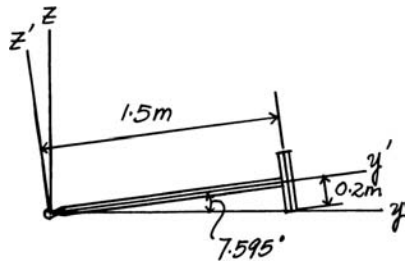

Since points A and C have zero velocity,

$$\mathbf{v}_C = \mathbf{v}_A + \omega \times \mathbf{r}_{C/A}$$

$$\mathbf{0} = \mathbf{0} + \left[(0.13216\,\omega_z - \omega_{y'})\mathbf{j}' + 0.99123\omega_z \mathbf{k}'\right] \times (1.5\mathbf{j}' - 0.2\mathbf{k}')$$

$$0 = -1.48684\omega_z - 0.026433\,\omega_z + 0.2\,\omega_{y'}$$

$$\omega_{y'} = 7.5664\,\omega_z$$

Thus,

$$\omega = -7.4342\,\omega_z \mathbf{j}' + 0.99123\,\omega_z \mathbf{k}'$$

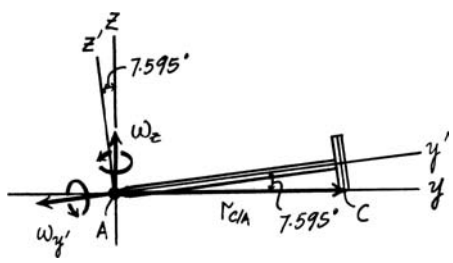

$$T_1 + \Sigma U_{1-2} = T_2$$

$$0 + 5(2\pi)(2) = 0 + \frac{1}{2}(0.100)(-7.4342\,\omega_z)^2 + \frac{1}{2}(13.55)(0.99123\,\omega_z)^2$$

$$\omega_z = 2\ 58 \text{ rad/s}$$ **Ans.**

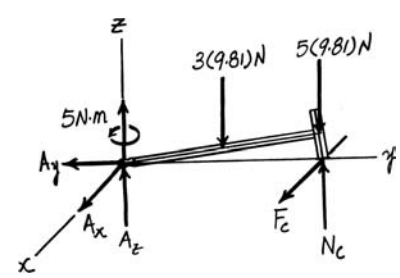

© 2010 Pearson Education, Inc., Upper Saddle River, NJ. All rights reserved. This material is protected under all copyright laws as they currently exist. No portion of this material may be reproduced, in any form or by any means, without permission in writing from the publisher.

21–26. The 5-kg disk is connected to the 3-kg slender rod. If the assembly is attached to a ball-and-socket joint at A and the 5-N · m couple moment gives it an angular velocity about the z axis of $\omega_z = 2$ rad/s, determine the magnitude of the angular momentum of the assembly about A.

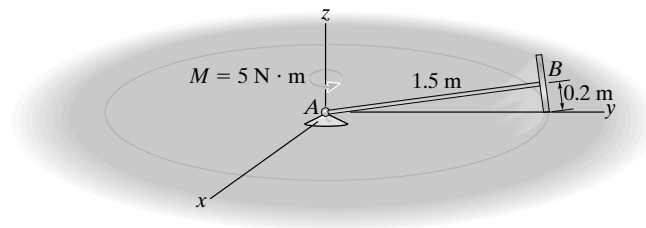

$$I_x = I_z = \frac{1}{4}(5)(0.2)^2 + 5(1.5)^2 + \frac{1}{3}(3)(1.5)^2 = 13.55$$

$$I_x = \frac{1}{2}(5)(0.2)^2 = 0.100$$

$$\omega = -\omega_y \mathbf{j}' + \omega_z \mathbf{k} = -\omega_{y'} \mathbf{j}' + \omega_z \sin 7.595° \mathbf{j}' + \omega_z \cos 7.595° \mathbf{k}'$$

$$= (0.13216\omega_z - \omega_y)\mathbf{j}' + 0.99123\,\omega_z \mathbf{k}'$$

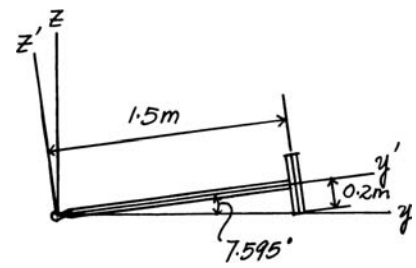

Since points A and C have zero velocity,

$$\mathbf{v}_C = \mathbf{v}_A + \omega \times \mathbf{r}_{C/A}$$

$$\mathbf{0} = \mathbf{0} + \left[(0.13216\,\omega_z - \omega_y)\,\mathbf{j}' + 0.99123\,\omega_z \mathbf{k}'\right] \times (1.5\mathbf{j}' - 0.2\mathbf{k}')$$

$$0 = -1\ 48684\omega_z - 0.26433\omega_z + 0.2\omega_y$$

$$\omega_{y'} = -7.5664\,\omega_z$$

Thus,

$$\omega = -7.4342\,\omega_z \mathbf{j}' + 0.99123\,\omega_z \mathbf{k}'$$

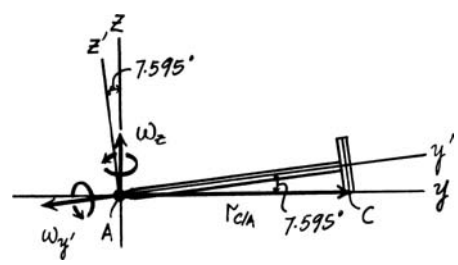

Since $\omega_z = 2$ rad/s

$$\omega = -14.868\mathbf{j}' + 1\ 9825\mathbf{k}'$$

So that,

$$\mathbf{H}_A = I_{x'}\,\omega_x \mathbf{i}' + I_{y'}\,\omega_{y'} \mathbf{j} + I_{z'}\,\omega_{z'} \mathbf{k}' = \mathbf{0} + 0.100(-14.868)\mathbf{j}' + 13.55(1.9825)\,\mathbf{k}'$$

$$= -1.4868\mathbf{j}' + 26.862\mathbf{k}'$$

$$H_A = \sqrt{(-1.4868)^2 + (26.862)^2} = 26.9\ \text{kg} \cdot \text{m}^2/\text{s} \qquad \textbf{Ans.}$$

© 2010 Pearson Education, Inc., Upper Saddle River, NJ. All rights reserved. This material is protected under all copyright laws as they currently exist. No portion of this material may be reproduced, in any form or by any means, without permission in writing from the publisher.

21–27. The space capsule has a mass of 5 Mg and the radii of gyration are $k_x = k_z = 1.30$ m and $k_y = 0.45$ m. If it travels with a velocity $\mathbf{v}_G = \{400\mathbf{j} + 200\mathbf{k}\}$ m/s, compute its angular velocity just after it is struck by a meteoroid having a mass of 0.80 kg and a velocity $\mathbf{v}_m = \{-300\mathbf{i} + 200\mathbf{j} - 150\mathbf{k}\}$ m/s. Assume that the meteoroid embeds itself into the capsule at point A and that the capsule initially has no angular velocity.

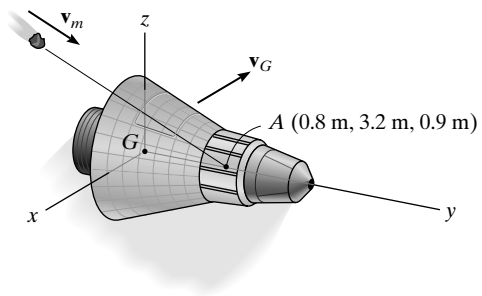

Conservation of Angular Momentum: The angular momentum is conserved about the center of mass of the space capsule G. Neglect the mass of the meteroid after the impact.

$$(H_G)_1 = (H_G)_2$$

$$\mathbf{r}_{GA} \times m_m \mathbf{v}_m = I_G \omega$$

$$(0.8\mathbf{i} + 3.2\mathbf{j} + 0.9\mathbf{k}) \times 0.8(-300\mathbf{i} + 200\mathbf{j} - 150\mathbf{k})$$

$$= 5000\left(1.30^2\right)\omega_x \mathbf{i} + 5000\left(0.45^2\right)\omega_y \mathbf{j} + 5000\left(1.30^2\right)\omega_z \mathbf{k}$$

$$-528\mathbf{i} - 120\mathbf{j} + 896\mathbf{k} = 8450\omega_x \mathbf{i} + 1012.5\omega_y \mathbf{j} + 8450\,\omega_z \mathbf{k}$$

Equating **i**, **j** and **k** components, we have

$$-528 = 8450\omega_x \qquad \omega_x = -0.06249 \text{ rad/s}$$

$$-120 = 1012.5\omega_y \qquad \omega_y = -0.11852 \text{ rad/s}$$

$$896 = 8450\omega_z \qquad \omega_z = 0.1060 \text{ rad/s}$$

Thus,

$$\omega = \{-0.0625\mathbf{i} - 0.119\mathbf{j} + 0.106\mathbf{k}\} \text{ rad/s} \qquad \textbf{Ans.}$$

© 2010 Pearson Education, Inc., Upper Saddle River, NJ. All rights reserved. This material is protected under all copyright laws as they currently exist. No portion of this material may be reproduced, in any form or by any means, without permission in writing from the publisher.

***21–28.** Each of the two disks has a weight of 10 lb. The axle AB weighs 3 lb. If the assembly rotates about the z axis at $\omega_z = 6$ rad/s, determine its angular momentum about the z axis and its kinetic energy. The disks roll without slipping.

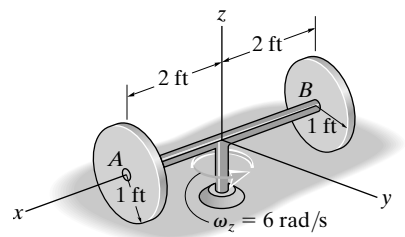

$$\frac{6}{\omega_x} = \frac{1}{2} \qquad \omega_x = 12 \text{ rad/s}$$

$$\omega_A = \{-12\mathbf{i}\} \text{ rad/s} \qquad \omega_B = \{12\mathbf{i}\} \text{ rad/s}$$

$$\mathbf{H}_z = \left[\frac{1}{2}\left(\frac{10}{32.2}\right)(1)^2\right](12\mathbf{i}) + \left[\frac{1}{2}\left(\frac{10}{32.2}\right)(1)^2\right](-12\mathbf{i})$$

$$+ \mathbf{0} + \left\{2\left[\frac{1}{4}\left(\frac{10}{32.2}\right)(1)^2 + \frac{10}{32.2}(2)^2\right](6) + \frac{1}{12}\left(\frac{3}{32.2}\right)(4)^2(6)\right\}\mathbf{k}$$

$$\mathbf{H}_z = \{16.6\mathbf{k}\} \text{ slug} \cdot \text{ft}^2/\text{s} \qquad \textbf{Ans.}$$

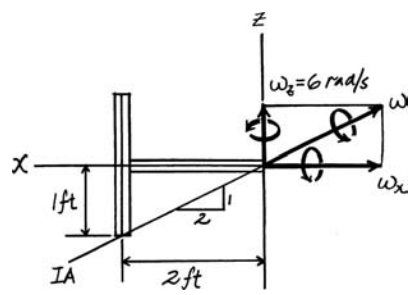

$$T = \frac{1}{2} I_x \omega_x^2 + \frac{1}{2} I_y \omega_y^2 + \frac{1}{2} I_z \omega_z^2$$

$$= \frac{1}{2}\left[2\left(\frac{1}{2}\left(\frac{10}{32.2}\right)(1)^2\right)\right](12)^2 + 0$$

$$+ \frac{1}{2}\left\{2\left[\frac{1}{4}\left(\frac{10}{32.2}\right)(1)^2 + \frac{10}{32.2}(2)^2\right] + \frac{1}{12}\left(\frac{3}{32.2}\right)(4)^2\right\}(6)^2$$

$$= 72.1 \text{ lb} \cdot \text{ft} \qquad \textbf{Ans.}$$

© 2010 Pearson Education, Inc., Upper Saddle River, NJ. All rights reserved. This material is protected under all copyright laws as they currently exist. No portion of this material may be reproduced, in any form or by any means, without permission in writing from the publisher.

•21–29. The 10-kg circular disk spins about its axle with a constant angular velocity of $\omega_1 = 15$ rad/s. Simultaneously, arm OB and shaft OA rotate about their axes with constant angular velocities of $\omega_2 = 0$ and $\omega_3 = 6$ rad/s, respectively. Determine the angular momentum of the disk about point O, and its kinetic energy.

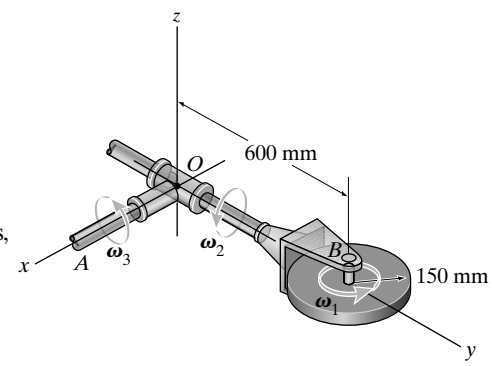

The mass moments of inertia of the disk about the centroidal x', y', and z' axes, Fig. a, are

$$I_{x'} = I_{y'} = \frac{1}{4}mr^2 = \frac{1}{4}(10)\left(0.15^2\right) = 0.05625 \text{ kg}\cdot\text{m}^2$$

$$I_{z'} = \frac{1}{2}mr^2 = \frac{1}{2}(10)\left(0.15^2\right) = 0.1125 \text{ kg}\cdot\text{m}^2$$

Due to symmetry, the products of inertia of the disk with respect to its centroidal planes are equal to zero.

$$I_{x'y'} = I_{y'z'} = I_{x'z'} = 0$$

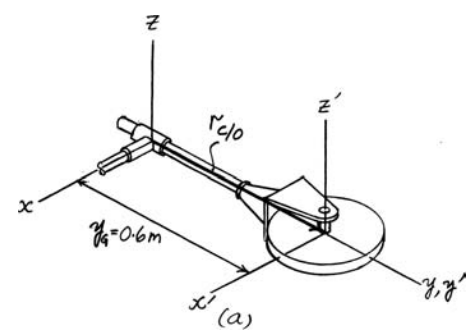

Here, the angular velocity of the disk can be determined from the vector addition of ω_1 and ω_3. Thus,

$$\omega = \omega_1 + \omega_2 = [6\mathbf{i} + 15\mathbf{k}] \text{ rad/s}$$

The angular momentum of the disk about its mass center G can be obtained by applying

$$H_x = I_{x'}\omega_x = 0.05625(6) = 0.3375 \text{ kg}\cdot\text{m}^2/\text{s}$$

$$H_y = I_{y'}\omega_y = 0.05625(0) = 0$$

$$H_z = I_{z'}\omega_z = 0.1125(15) = 1.6875 \text{ kg}\cdot\text{m}^2/\text{s}$$

Thus,

$$\mathbf{H}_G = [0.3375\mathbf{i} + 1.6875\mathbf{k}] \text{ kg}\cdot\text{m}^2/\text{s}$$

Since the mass center G rotates about the x axis with a constant angular velocity of $\omega_3 = [6\mathbf{i}]$ rad/s, its velocity is

$$\mathbf{v}_G = \omega_3 \times \mathbf{r}_{C/O} = (6\mathbf{i}) \times (0.6\mathbf{j}) = [3.6\mathbf{k}] \text{ m/s}$$

Since the disk does not rotate about a fixed point O, its angular momentum must be determined from

$$\begin{aligned}\mathbf{H}_O &= \mathbf{r}_{C/O} \times m\mathbf{v}_C + \mathbf{H}_G \\ &= (0.6\mathbf{j}) \times 10(3.6\mathbf{k}) + (0.3375\mathbf{i} + 1.6875\mathbf{k}) \\ &= [21.9375\mathbf{i} + 1.6875\mathbf{k}] \text{ kg}\cdot\text{m}^2/\text{s} \\ &= [21.9\mathbf{i} + 1.69\mathbf{k}] \text{ kg}\cdot\text{m}^2/\text{s} \qquad \textbf{Ans.}\end{aligned}$$

The kinetic energy of the disk is therefore

$$\begin{aligned}T &= \frac{1}{2}\omega\cdot\mathbf{H}_O \\ &= \frac{1}{2}(6\mathbf{i} + 15\mathbf{k})\cdot(21.9375\mathbf{i} + 1.6875\mathbf{k}) \\ &= 78.5 \text{ J} \qquad \textbf{Ans.}\end{aligned}$$

© 2010 Pearson Education, Inc., Upper Saddle River, NJ. All rights reserved. This material is protected under all copyright laws as they currently exist. No portion of this material may be reproduced, in any form or by any means, without permission in writing from the publisher.

21–30. The 10-kg circular disk spins about its axle with a constant angular velocity of $\omega_1 = 15$ rad/s. Simultaneously, arm OB and shaft OA rotate about their axes with constant angular velocities of $\omega_2 = 10$ rad/s and $\omega_3 = 6$ rad/s, respectively. Determine the angular momentum of the disk about point O, and its kinetic energy.

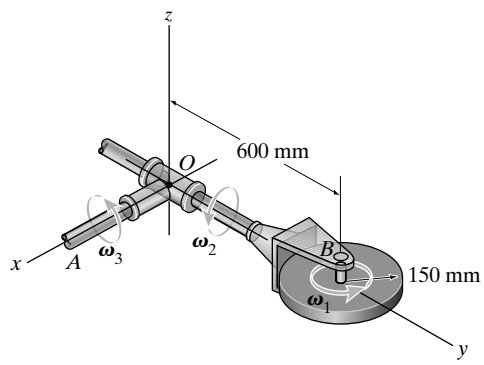

The mass moments of inertia of the disk about the centroidal x', y', and z' axes. Fig. a, are

$$I_{x'} = I_{y'} = \frac{1}{4}mr^2 = \frac{1}{4}(10)\left(0.15^2\right) = 0.05625 \text{ kg}\cdot\text{m}^2$$

$$I_{z'} = \frac{1}{2}mr^2 = \frac{1}{2}(10)\left(0.15^2\right) = 0.1125 \text{ kg}\cdot\text{m}^2$$

Due to symmetry, the products of inertia of the disk with respect to its centroidal planes are equal to zero.

$$I_{x'y'} = I_{y'z'} = I_{x'z'} = 0$$

Here, the angular velocity of the disk can be determined from the vector addition of ω_1, ω_2, and ω_3. Thus,

$$\omega = \omega_1 + \omega_2 + \omega_3 = [6\mathbf{i} + 10\mathbf{j} + 15\mathbf{k}] \text{ rad/s}$$

The angular momentum of the disk about its mass center G can be obtained by applying

$$H_x = I_{x'}\omega_x = 0.05625(6) = 0.3375 \text{ kg}\cdot\text{m}^2$$

$$H_y = I_{y'}\omega_y = 0.05625(10) = 0.5625 \text{ kg}\cdot\text{m}^2$$

$$H_z = I_{z'}\omega_z = 0.1125(15) = 1.6875 \text{ kg}\cdot\text{m}^2$$

Thus,

$$\mathbf{H}_G = [0.3375\mathbf{i} + 0.5625\mathbf{j} + 1.6875\mathbf{k}] \text{ kg}\cdot\text{m}^2$$

Since the mass center G rotates about the fixed point O with an angular velocity of $\Omega = \omega_2 + \omega_3 = [6\mathbf{i} + 10\mathbf{j}]$, its velocity is

$$\mathbf{v}_G = \Omega \times \mathbf{r}_{G/O} = (6\mathbf{i} + 10\mathbf{j}) \times (0.6\mathbf{j}) = [3.6\mathbf{k}] \text{ m/s}$$

Since the disk does not rotate about a fixed point O, its angular momentum must be determined from

$$\begin{aligned}\mathbf{H}_O &= \mathbf{r}_{C/O} \times m\mathbf{v}_G + \mathbf{H}_G \\ &= (0.6\mathbf{j}) \times 10(3.6\mathbf{k}) + (0.3375\mathbf{i} + 0.5625\mathbf{j} + 1.6875\mathbf{k}) \\ &= [21.9375\mathbf{i} + 0.5625\mathbf{j} + 1.6875\mathbf{k}] \text{ kg}\cdot\text{m}^2/\text{s} \\ &= [21.9\mathbf{i} + 0.5625\mathbf{j} + 1.69\mathbf{k}] \text{ kg}\cdot\text{m}^2/\text{s} \qquad \textbf{Ans.}\end{aligned}$$

The kinetic energy of the disk is therefore

$$\begin{aligned}T &= \frac{1}{2}\omega\cdot\mathbf{H}_O \\ &= \frac{1}{2}(6\mathbf{i} + 10\mathbf{j} + 15\mathbf{k})\cdot(21.9375\mathbf{i} + 0.5625\mathbf{j} + 1.6875\mathbf{k}) \\ &= 81.3\text{J} \qquad \textbf{Ans.}\end{aligned}$$

© 2010 Pearson Education, Inc., Upper Saddle River, NJ. All rights reserved. This material is protected under all copyright laws as they currently exist. No portion of this material may be reproduced, in any form or by any means, without permission in writing from the publisher.

21–31. The 200-kg satellite has its center of mass at point G. Its radii of gyration about the z', x', y' axes are $k_{z'} = 300$ mm, $k_{x'} = k_{y'} = 500$ mm, respectively. At the instant shown, the satellite rotates about the x', y', and z' axes with the angular velocity shown, and its center of mass G has a velocity of $\mathbf{v}_G = \{-250\mathbf{i} + 200\mathbf{j} + 120\mathbf{k}\}$ m/s. Determine the angular momentum of the satellite about point A at this instant.

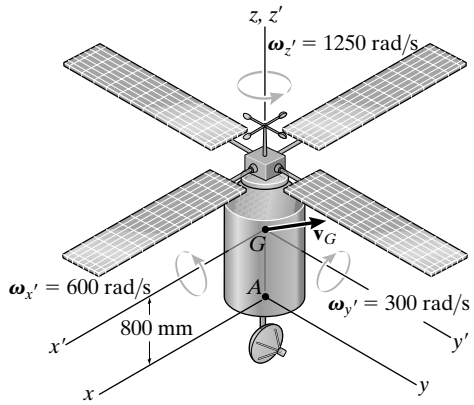

The mass moments of inertia of the satellite about the x', y', and z' axes are

$$I_{x'} = I_{y'} = 200\left(0.5^2\right) = 50 \text{ kg}\cdot\text{m}^2$$

$$I_{z'} = 200\left(0.3^2\right) = 18 \text{ kg}\cdot\text{m}^2$$

Due to symmetry, the products of inertia of the satellite with respect to the x', y', and z' coordinate system are equal to zero.

$$I_{x'y'} = I_{y'z'} = I_{x'z'} = 0$$

The angular velocity of the satellite is

$$\omega = [600\mathbf{i} + 300\mathbf{j} + 1250\mathbf{k}] \text{ rad/s}$$

Thus,

$$\omega_{x'} = 600 \text{ rad/s} \qquad \omega_{y'} = -300 \text{ rad/s} \qquad \omega_{z'} = 1250 \text{ rad/s}$$

Then, the components of the angular momentum of the satellite about its mass center G are

$$(H_G)_{x'} = I_{x'}\omega_{x'} = 50(600) = 30\,000 \text{ kg}\cdot\text{m}^2/\text{s}$$

$$(H_G)_{y'} = I_{y'}\omega_{y'} = 50(-300) = 15\,000 \text{ kg}\cdot\text{m}^2/\text{s}$$

$$(H_G)_{z'} = I_{z'}\omega_{z'} = 18(1250) = 22\,500 \text{ kg}\cdot\text{m}^2/\text{s}$$

Thus,

$$\mathbf{H}_G = [30\,000\mathbf{i} + 15\,000\mathbf{j} + 22\,500\mathbf{k}] \text{ kg}\cdot\text{m}^2/\text{s}$$

The angular momentum of the satellite about point A can be determined from

$$\mathbf{H}_A = \mathbf{r}_{G/A} \times m\mathbf{v}_G + \mathbf{H}_G$$

$$= (0.8\mathbf{k}) \times 200(-250\mathbf{i} + 200\mathbf{j} + 120\mathbf{k}) + (30\,000\mathbf{i} + 15\,000\mathbf{j} + 22\,500\mathbf{k})$$

$$= [-2000\mathbf{i} - 25\,000\mathbf{j} + 22\,500\mathbf{k}] \text{ kg}\cdot\text{m}^2/\text{s} \qquad \textbf{Ans.}$$

© 2010 Pearson Education, Inc., Upper Saddle River, NJ. All rights reserved. This material is protected under all copyright laws as they currently exist. No portion of this material may be reproduced, in any form or by any means, without permission in writing from the publisher.

***21–32.** The 200-kg satellite has its center of mass at point G. Its radii of gyration about the z', x', y' axes are $k_{z'} = 300$ mm, $k_{x'} = k_{y'} = 500$ mm, respectively. At the instant shown, the satellite rotates about the x', y', and z' axes with the angular velocity shown, and its center of mass G has a velocity of $\mathbf{v}_G = \{-250\mathbf{i} + 200\mathbf{j} + 120\mathbf{k}\}$ m/s. Determine the kinetic energy of the satellite at this instant.

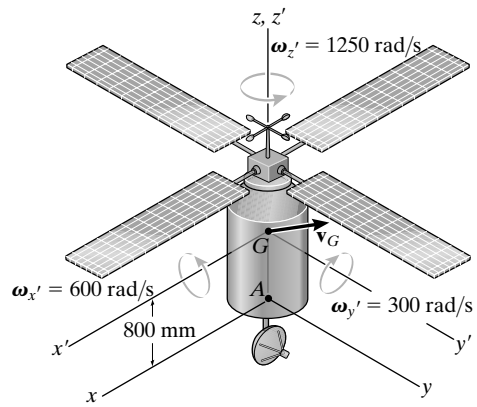

The mass moments of inertia of the satellite about the x', y', and z' axes are

$$I_{x'} = I_{y'} = 200\left(0.5^2\right) = 50 \text{ kg}\cdot\text{m}^2$$

$$I_{z'} = 200\left(0.3^2\right) = 18 \text{ kg}\cdot\text{m}^2$$

Due to symmetry, the products of inertia of the satellite with respect to the x', y', and z' coordinate system are equal to zero.

$$I_{x'y'} = I_{y'z'} = I_{x'z'} = 0$$

The angular velocity of the satellite is

$$\omega = [600\mathbf{i} - 300\mathbf{j} + 1250\mathbf{k}] \text{ rad/s}$$

Thus,

$$\omega_{x'} = 600 \text{ rad/s} \qquad \omega_{y'} = -300 \text{ rad/s} \qquad \omega_{z'} = 1250 \text{ rad/s}$$

Since $v_G{}^2 = (-250)^2 + 200^2 + 120^2 = 116\,900 \text{ m}^2/\text{s}^2$, the kinetic energy of the satellite can be determined from

$$T = \frac{1}{2}mv_G{}^2 + \frac{1}{2}I_{x'}\omega_{x'}{}^2 + \frac{1}{2}I_{y'}\omega_{y'}{}^2 + \frac{1}{2}I_{z'}\omega_{z'}{}^2$$

$$= \frac{1}{2}(200)(116\,900) + \frac{1}{2}(50)\left(600^2\right) + \frac{1}{2}(50)(-300)^2 + \frac{1}{2}(18)\left(1250^2\right)$$

$$= 37.0025\left(10^6\right)\text{J} = 37.0\text{MJ} \qquad \textbf{Ans.}$$

© 2010 Pearson Education, Inc., Upper Saddle River, NJ. All rights reserved. This material is protected under all copyright laws as they currently exist. No portion of this material may be reproduced, in any form or by any means, without permission in writing from the publisher.

•21–33. The 25-lb thin plate is suspended from a ball-and-socket joint at O. A 0.2-lb projectile is fired with a velocity of $\mathbf{v} = \{-300\mathbf{i} - 250\mathbf{j} + 300\mathbf{k}\}$ ft/s into the plate and becomes embedded in the plate at point A. Determine the angular velocity of the plate just after impact and the axis about which it begins to rotate. Neglect the mass of the projectile after it embeds into the plate.

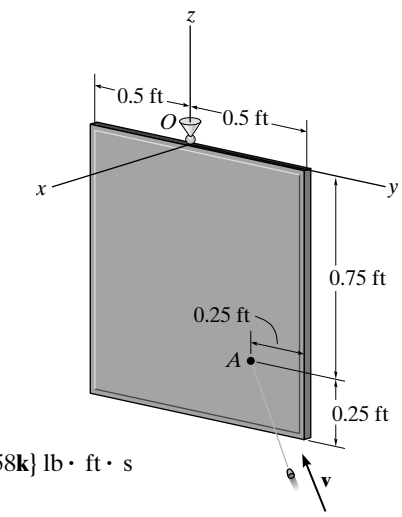

Angular momentum about point O is conserved.

$$(\mathbf{H}_O)_2 = (\mathbf{H}_O)_1 = \mathbf{r}_{OA} \times m_p \mathbf{v}_p$$

$$(\mathbf{H}_O)_1 = (0.25\mathbf{j} - 0.75\mathbf{k}) \times \left(\frac{0.2}{32.2}\right)(-300\mathbf{i} - 250\mathbf{j} + 300\mathbf{k}) = \{-0.6988\mathbf{i} + 1.3975\mathbf{j} + 0.4658\mathbf{k}\}\ \text{lb}\cdot\text{ft}\cdot\text{s}$$

$$I_x = \left(\frac{1}{12}\right)\left(\frac{25}{32.2}\right)\left[(1)^2 + (1)^2\right] + \left(\frac{25}{32.2}\right)(0.5)^2 = 0.3235\ \text{slug}\cdot\text{ft}^2$$

$$I_y = \left(\frac{1}{12}\right)\left(\frac{25}{32.2}\right)(1)^2 + \left(\frac{25}{32.2}\right)(0.5)^2 = 0.2588\ \text{slug}\cdot\text{ft}^2$$

$$I_z = \left(\frac{1}{12}\right)\left(\frac{25}{32.2}\right)(1)^2 = 0.06470\ \text{slug}\cdot\text{ft}^2$$

$$(\mathbf{H}_O)_1 = (\mathbf{H}_O)_2$$

$$-0.6988\mathbf{i} + 1.3975\mathbf{j} + 0.4658\mathbf{k} = 0.3235\omega_x\,\mathbf{i} + 0.2588\omega_y\,\mathbf{j} + 0.06470\omega_z\,\mathbf{k}$$

$$\omega_x = \frac{-0.6988}{0.3235} = -2.160\ \text{rad/s}$$

$$\omega_y = \frac{1.3975}{0.2588} = 5.400\ \text{rad/s}$$

$$\omega_z = \frac{0.4658}{0.06470} = 7.200\ \text{rad/s}$$

$$\omega = \{-2.16\mathbf{i} + 5.40\mathbf{j} + 7.20\mathbf{k}\}\ \text{rad/s} \qquad \textbf{Ans.}$$

Axis of rotation line is along ω:

$$\mathbf{u}_O = \frac{-2.160\mathbf{i} + 5.400\mathbf{j} + 7.200\mathbf{k}}{\sqrt{(-2.160)^2 + (5.400)^2 + (7.200)^2}}$$

$$= -0.233\mathbf{i} + 0.583\mathbf{j} + 0.778\mathbf{k} \qquad \textbf{Ans.}$$

© 2010 Pearson Education, Inc., Upper Saddle River, NJ. All rights reserved. This material is protected under all copyright laws as they currently exist. No portion of this material may be reproduced, in any form or by any means, without permission in writing from the publisher.

21–34. Solve Prob. 21–33 if the projectile emerges from the plate with a velocity of 275 ft/s in the same direction.

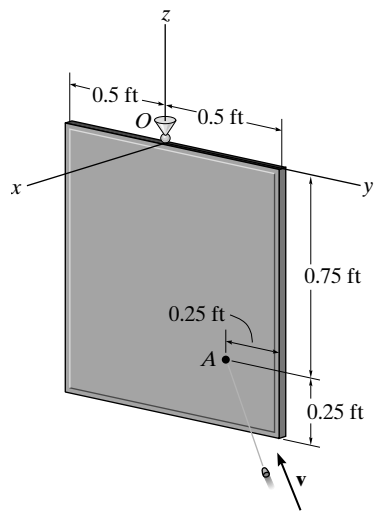

$$\mathbf{u}_v = \left(\frac{-300}{492.4}\right)\mathbf{i} - \left(\frac{250}{492.4}\right)\mathbf{j} + \left(\frac{300}{492.4}\right)\mathbf{k} = -0.6092\mathbf{i} - 0.5077\mathbf{j} + 0.6092\mathbf{k}$$

$$I_x = \left(\frac{1}{12}\right)\left(\frac{25}{32.2}\right)\left[(1)^2 + (1)^2\right] + \left(\frac{25}{32.2}\right)(0.5)^2 = 0.32350 \text{ slug}\cdot\text{ ft}^2$$

$$I_y = \left(\frac{1}{12}\right)\left(\frac{25}{32.2}\right)(1)^2 + \left(\frac{25}{32.2}\right)(0.5)^2 = 0.25880 \text{ slug}\cdot\text{ft}^2$$

$$I_z = \left(\frac{1}{12}\right)\left(\frac{25}{32.2}\right)(1)^2 = 0.06470 \text{ slug}\cdot\text{ ft}^2$$

$$\mathbf{H}_1 + \Sigma\int \mathbf{M}_O\, dt = \mathbf{H}_2$$

$$(0.25\mathbf{j} - 0.75\mathbf{k}) \times \left(\frac{0.2}{32.2}\right)(-300\mathbf{i} - 250\mathbf{j} + 300\mathbf{k}) + \mathbf{0} = 0.32350\omega_x\,\mathbf{i} + 0.25880\omega_y\,\mathbf{j} + 0.06470\omega_z\,\mathbf{k}$$

$$+(0.25\mathbf{j} - 0.75\mathbf{k}) \times \left(\frac{0.2}{32.2}\right)(275)(-0.6092\mathbf{i} - 0.5077\mathbf{j} + 0.6092\mathbf{k})$$

Expanding, the **i**, **j**, **k**, components are:

$$-0.6988 = 0.32350\omega_x - 0.390215$$

$$1.3975 = 0.25880\omega_y + 0.78043$$

$$0.4658 = 0.06470\omega_z + 0.26014$$

$$\omega_x = -0.9538, \qquad \omega_y = 2.3844, \qquad \omega_z = 3.179$$

$$\omega = \{-0.954\mathbf{i} + 2.38\mathbf{j} + 3.18\mathbf{k}\} \text{ rad/s} \qquad \textbf{Ans.}$$

Axis of rotation is along ω:

$$\mathbf{u}_A = \frac{-0.954\mathbf{i} + 2.38\mathbf{j} + 3.18\mathbf{k}}{\sqrt{(-0.954)^2 + (2.38)^2 + (3.18)^2}}$$

$$\mathbf{u}_A = -0.233\mathbf{i} + 0.583\mathbf{j} + 0.778\mathbf{k} \qquad \textbf{Ans.}$$

© 2010 Pearson Education, Inc., Upper Saddle River, NJ. All rights reserved. This material is protected under all copyright laws as they currently exist. No portion of this material may be reproduced, in any form or by any means, without permission in writing from the publisher.

21–35. A thin plate, having a mass of 4 kg, is suspended from one of its corners by a ball-and-socket joint O. If a stone strikes the plate perpendicular to its surface at an adjacent corner A with an impulse of $\mathbf{I}_s = \{-60\mathbf{i}\}\ \mathrm{N}\cdot\mathrm{s}$, determine the instantaneous axis of rotation for the plate and the impulse created at O.

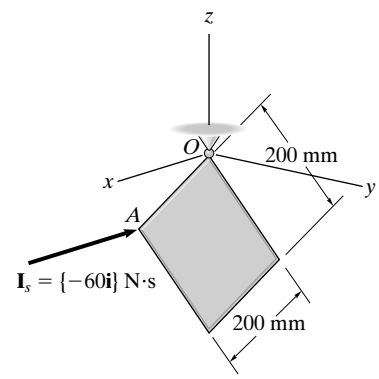

$$(\mathbf{H}_O)_1 + \sum \int \mathbf{M}_O\, dt = (\mathbf{H}_O)_2$$

$$\mathbf{0} + \mathbf{r}_{A/O} \times \mathbf{I}_S = (\mathbf{H}_O)_2$$

$$\mathbf{0} + (-0.2(0.7071)\mathbf{j} - 0.2(0.7071)\mathbf{k}) \times (-60\mathbf{i}) = (I_O)_x\, \omega_x\, \mathbf{i} + (I_O)_y\, \omega_y\, \mathbf{j} + (I_O)_z\, \omega_z\, \mathbf{k}$$

Expand and equate components:

$$0 = (I_O)_x\, \omega_x \qquad \textbf{(1)}$$

$$8.4853 = (I_O)_y\, \omega_y \qquad \textbf{(2)}$$

$$-8.4853 = (I_O)_z\, \omega_z \qquad \textbf{(3)}$$

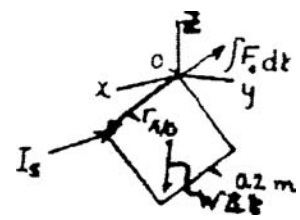

$$I_{x'y'} = 0, \qquad I_{y'z'} = 0, \qquad I_{x'z'} = 0$$

$$I_{y'} = \left(\frac{1}{12}\right)(4)(0.2)^2 = 0.01333, \qquad I_{z'} = \left(\frac{1}{12}\right)(4)(0.2)^2 = 0.01333$$

$$u_{x'} = \cos 90^\circ = 0, \qquad u_{y'} = \cos 135^\circ = -0.7071, \qquad u_{z'} = \cos 45^\circ = 0.7071$$

$$(I_G)_z = I_{x'} u_{x'}^2 + I_{y'} u_{y'}^2 + I_{z'} u_{z'}^2 - 2I_{x'y'} u_{x'} u_{y'} - 2I_{y'z'} u_{y'} u_{z'} - 2I_{z'x'} u_{z'} u_{x'}$$

$$= 0 + (0.01333)(-0.7071)^2 + (0.01333)(0.7071)^2 - 0 - 0 - 0$$

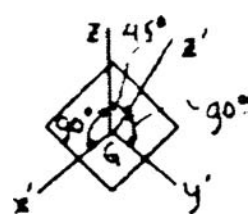

$$(I_G)_z = (I_O)_z = 0.01333$$

For $(I_O)_y$, use the parallel axis theorem.

$$(I_O)_y = 0.01333 + 4\left[0.7071(0.2)\right]^2, \qquad (I_O)_y = 0.09333$$

Hence, from Eqs. (1) and (2):

$$\omega_x = 0, \qquad \omega_y = 90.914, \qquad \omega_z = -636.340$$

The instantaneous axis of rotation is thus,

$$\mathbf{u}_{IA} = \frac{90.914\mathbf{j} - 636.340\mathbf{k}}{\sqrt{(90.914)^2 + (-636.340)^2}} = 0.141\mathbf{j} - 0.990\mathbf{k} \qquad \textbf{Ans.}$$

The velocity of G just after the plate is hit is

$$\mathbf{v}_G = \omega \times \mathbf{r}_{G/O}$$

$$\mathbf{v}_G = (90.914\mathbf{j} - 636.340\mathbf{k}) \times (-0.2(0.7071)\mathbf{k}) = -12.857\mathbf{i}$$

$$m(\mathbf{v}_G)_1 + \Sigma \int \mathbf{F}\, dt = m(\mathbf{v}_G)_2$$

$$\mathbf{0} - 60\mathbf{i} + \int \mathbf{F}_O\, dt = -4(12.857)\mathbf{i}$$

$$\int \mathbf{F}_O\, dt = \{8.57\mathbf{i}\}\ \mathrm{N}\cdot\mathrm{s} \qquad \textbf{Ans.}$$

© 2010 Pearson Education, Inc., Upper Saddle River, NJ. All rights reserved. This material is protected under all copyright laws as they currently exist. No portion of this material may be reproduced, in any form or by any means, without permission in writing from the publisher.

***21–36.** The 15-lb plate is subjected to a force $F = 8$ lb which is always directed perpendicular to the face of the plate. If the plate is originally at rest, determine its angular velocity after it has rotated one revolution (360°). The plate is supported by ball-and-socket joints at A and B.

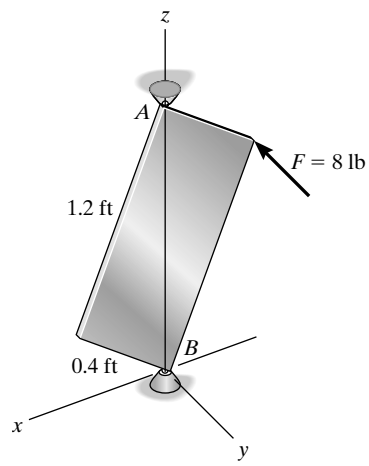

Due to symmetry

$$I_{x'y'} = I_{y'z'} = I_{z'x'} = 0$$

$$I_{x'} = \frac{1}{12}\left(\frac{15}{32.2}\right)(1.2)^2 = 0.05590 \text{ slug}\cdot\text{ft}^2$$

$$I_{y'} = \frac{1}{12}\left(\frac{15}{32.2}\right)(1.2^2 + 0.4^2) = 0.06211 \text{ slug}\cdot\text{ft}^2$$

$$I_{z'} = \frac{1}{12}\left(\frac{15}{32.2}\right)(0.4)^2 = 0.006211 \text{ slug}\cdot\text{ft}^2$$

For z axis

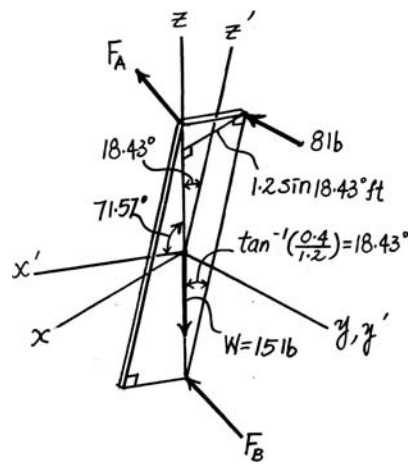

$$u_{x'} = \cos 71.57° = 0.3162 \qquad u_{y'} = \cos 90° = 0$$

$$u_{z'} = \cos 18.43° = 0.9487$$

$$I_z = I_{x'}u_{x'}^2 + I_{y'}u_{y'}^2 + I_{z'}u_{z'}^2 - 2I_{x'y'}u_{x'}u_{y'} - 2I_{y'z'}u_{y'}u_{z'} - 2I_{z'x'}u_{z'}u_{x'}$$

$$= 0.05590(0.3162)^2 + 0 + 0.006211(0.9487)^2 - 0 - 0 - 0$$

$$= 0.01118 \text{ slug}\cdot\text{ft}^2$$

Principle of work and energy:

$$T_1 + \Sigma U_{1-2} = T_2$$

$$0 + 8(1.2 \sin 18.43°)(2\pi) = \frac{1}{2}(0.01118)\omega^2$$

$$\omega = 58.4 \text{ rad/s} \qquad \textbf{Ans.}$$

•21–37. The plate has a mass of 10 kg and is suspended from parallel cords. If the plate has an angular velocity of 1.5 rad/s about the z axis at the instant shown, determine how high the center of the plate rises at the instant the plate momentarily stops swinging.

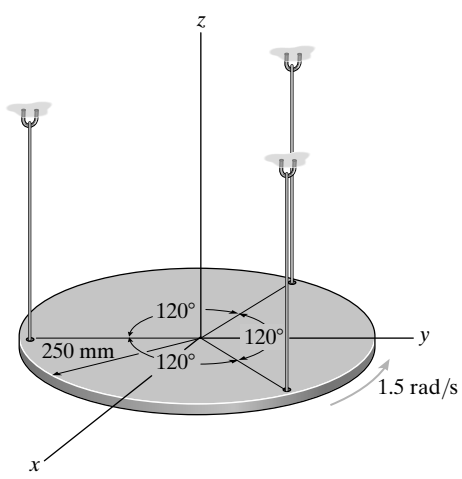

Consevation Energy: Datum is set at the initial position of the plate. When the plate is at its final position and its mass center is located h *above* the datum. Thus, its gravitational potential energy at this position is $10(9.81)h = 98.1h$. Since the plate momentarily stops swinging, its final kinetic energy $T_2 = 0$. Its initial kinetic energy i

$$T_1 = \frac{1}{2}I_G\,\omega^2 = \frac{1}{2}\left[\frac{1}{2}(10)\left(0.25^2\right)\right]\left(1.5^2\right) = 0.3516 \text{ J}$$

$$T_1 + V_1 = T_2 + V_2$$

$$0.3516 + 0 = 0 + 98.1h$$

$$h = 0.00358 \text{ m} = 3.58 \text{ mm} \qquad \textbf{Ans.}$$

© 2010 Pearson Education, Inc., Upper Saddle River, NJ. All rights reserved. This material is protected under all copyright laws as they currently exist. No portion of this material may be reproduced, in any form or by any means, without permission in writing from the publisher.

21–38. The satellite has a mass of 200 kg and radii of gyration of $k_x = k_y = 400$ mm and $k_z = 250$ mm. When it is not rotating, the two small jets A and B are ignited simultaneously, and each jet provides an impulse of $I = 1000\ \text{N}\cdot\text{s}$ on the satellite. Determine the satellite's angular velocity immediately after the ignition.

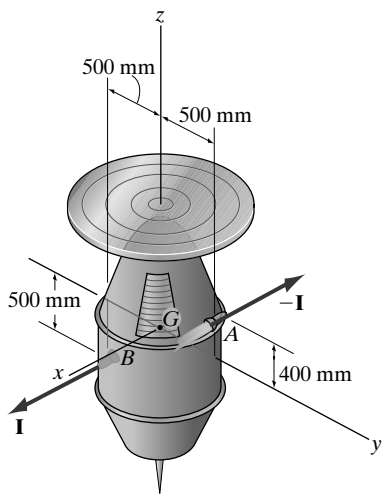

The mass moments of inertia of the satellite about the x, y, and z axes are

$$I_x = I_y = 200\left(0.4^2\right) = 32\ \text{kg}\cdot\text{m}^2$$

$$I_z = 200\left(0.25^2\right) = 12.5\ \text{kg}\cdot\text{m}^2$$

Due to symmetry,

$$I_{xy} = I_{yz} = I_{xz} = 0$$

Thus, the angular momentum of the satellite about its mass center G is

$$H_x = I_x\omega_x = 32\omega_x \qquad H_y = I_y\omega_y = 32\omega_y \qquad H_z = I_z\omega_z = 12.5\omega_z$$

Applying the principle of angular impulse and momentum about the x, y, and z axes,

$$(H_x)_1 + \Sigma\int_{t_1}^{t_2} M_x\,dt = (H_x)_2$$

$$0 + 0 = 32\omega_x$$

$$\omega_x = 0$$

$$\left(H_y\right)_1 + \Sigma\int_{t_1}^{t_2} M_y\,dt = \left(H_y\right)_2$$

$$0 - 1000(0.4) - 1000(0.5) = 32\omega_y$$

$$\omega_y = -28.125\ \text{rad/s}$$

$$(H_z)_1 + \Sigma\int_{t_1}^{t_2} M_y\,dt = (H_z)_2$$

$$0 + 1000(0.5) + 1000(0.5) = 12.5\omega_z$$

$$\omega_z = 80\ \text{rad/s}$$

Thus

$$\omega = \{-28.1\mathbf{j} + 80\mathbf{k}\}\ \text{rad/s} \qquad \textbf{Ans.}$$

© 2010 Pearson Education, Inc., Upper Saddle River, NJ. All rights reserved. This material is protected under all copyright laws as they currently exist. No portion of this material may be reproduced, in any form or by any means, without permission in writing from the publisher.

21–39. The bent rod has a mass per unit length of 6 kg/m, and its moments and products of inertia have been calculated in Prob. 21–9. If shaft AB rotates with a constant angular velocity of $\omega_z = 6$ rad/s, determine the angular momentum of the rod about point O, and the kinetic energy of the rod.

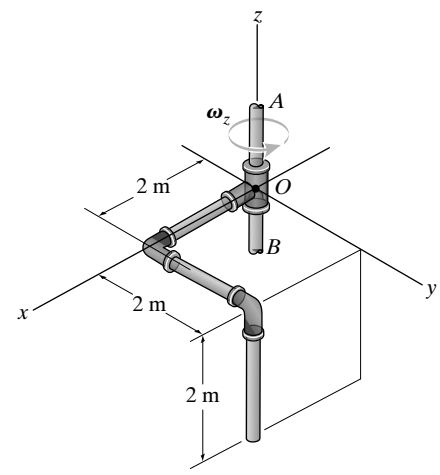

Here, the angular velocity of the rod is

$$\omega = [6\mathbf{k}] \text{ rad/s}$$

Thus,

$$\omega_x = \omega_y = 0 \qquad \omega_z = 6 \text{ rad/s}$$

The rod rotates about a fixed point O. Using the results of Prob. 20–91

$$H_x = I_x\omega_x - I_{xy}\omega_y - I_{xz}\omega_z$$
$$= 80(0) - 72(0) - (-24)(6) = 144 \text{ kg}\cdot\text{m}^2/\text{s}$$
$$H_y = -I_{xy}\omega_x + I_y\omega_y - I_{yz}\omega_z$$
$$= -72(0) + 128(0) - (-24)(6) = 144 \text{ kg}\cdot\text{m}^2/\text{s}$$
$$H_z = -I_{xz}\omega_x - I_{yz}\omega_y + I_z\omega_z$$
$$= -(-24)(0) - (-24)(0) + 176(6) = 1056 \text{ kg}\cdot\text{m}^2/\text{s}$$

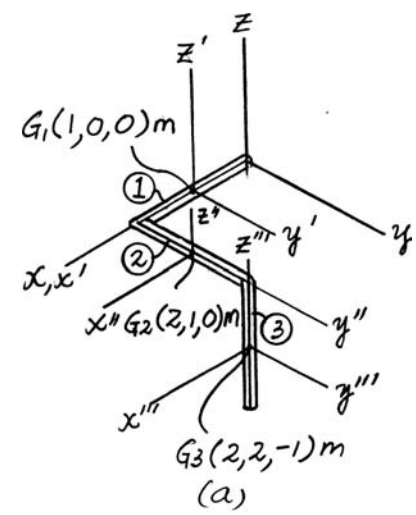

(a)

Thus,

$$\mathbf{H}_O = [144\mathbf{i} + 144\mathbf{j} + 1056\mathbf{k}] \text{ kg}\cdot\text{m}^2/\text{s} \qquad \textbf{Ans.}$$

The kinetic energy of the rod can be determined from

$$T = \frac{1}{2}\omega\cdot\mathbf{H}_O$$
$$= \frac{1}{2}(6\mathbf{k})\cdot(144\mathbf{i} + 144\mathbf{j} + 1056\mathbf{k})$$
$$= 3168 \text{ J} = 3.17 \text{ kJ} \qquad \textbf{Ans.}$$

© 2010 Pearson Education, Inc., Upper Saddle River, NJ. All rights reserved. This material is protected under all copyright laws as they currently exist. No portion of this material may be reproduced, in any form or by any means, without permission in writing from the publisher.

***21–40.** Derive the scalar form of the rotational equation of motion about the x axis if $\mathbf{\Omega} \neq \boldsymbol{\omega}$ and the moments and products of inertia of the body are *not constant* with respect to time.

In general

$$\mathbf{M} = \frac{d}{dt}(H_x\,\mathbf{i} + H_y\,\mathbf{j} + H_z\,\mathbf{k})$$

$$= \left(\dot{H}_x\,\mathbf{i} + \dot{H}_y\mathbf{j} + \dot{H}_z\,\mathbf{k}\right)_{xyz} + \Omega \times (H_x\,\mathbf{i} + H_y\mathbf{j} + H_z\,\mathbf{k})$$

Substitute $\Omega = \Omega_x\,\mathbf{i} + \Omega_y\,\mathbf{j} + \Omega_z\,\mathbf{k}$ and expanding the cross product yields

$$\mathbf{M} = \left(\left(\dot{H}_x\right)_{xyz} - \Omega_z\,H_y + \Omega_y H_z\right)\mathbf{i} + \left(\left(\dot{H}_y\right)_{xyz} - \Omega_x\,H_z + \Omega_z H_x\right)\mathbf{j} + \left(\left(\dot{H}_z\right)_{xyz} - \Omega_y\,H_x + \Omega_x\,H_y\right)\mathbf{k}$$

Subsitute H_x, H_y and H_z using Eq. 21–10. For the **i** component

$$\Sigma M_x = \frac{d}{dt}(I_x\,\omega_x - I_{xy}\,\omega_y - I_{xz}\,\omega_z) - \Omega_z\,(I_y\,\omega_y - I_{yz}\,\omega_z - I_{yx}\omega_x) + \Omega_y\,(I_z\,\omega_z - I_{zx}\,\omega_x - I_{zy}\,\omega_y) \qquad \textbf{Ans.}$$

One can obtain y and z components in a similar manner.

•21–41. Derive the scalar form of the rotational equation of motion about the x axis if $\mathbf{\Omega} \neq \boldsymbol{\omega}$ and the moments and products of inertia of the body are *constant* with respect to time.

In general

$$\mathbf{M} = \frac{d}{dt}(H_x\,\mathbf{i} + H_y\,\mathbf{j} + H_z\,\mathbf{k})$$

$$= \left(\dot{H}_x\,\mathbf{i} + \dot{H}_y\mathbf{j} + \dot{H}_z\,\mathbf{k}\right)_{xyz} + \Omega \times (H_x\,\mathbf{i} + H_y\mathbf{j} + H_z\,\mathbf{k})$$

Substitute $\Omega = \Omega_x\,\mathbf{i} + \Omega_y\,\mathbf{j} + \Omega_z\,\mathbf{k}$ and expanding the cross product yields

$$\mathbf{M} = \left(\left(\dot{H}_x\right)_{xyz} - \Omega_z\,H_y + \Omega_y H_z\right)\mathbf{i} + \left(\left(\dot{H}_y\right)_{xyz} - \Omega_x\,H_z + \Omega_z H_x\right)\mathbf{j} + \left(\left(\dot{H}_z\right)_{xyz} - \Omega_y\,H_x + \Omega_x\,H_y\right)\mathbf{k}$$

Substitute H_x, H_y and H_z using Eq. 21–10. For the **i** component

$$\Sigma M_x = \frac{d}{dt}(I_x\,\omega_x - I_{xy}\,\omega_y - I_{xz}\,\omega_z) - \Omega_z\,(I_y\,\omega_y - I_{yz}\,\omega_z - I_{yx}\omega_x) + \Omega_y\,(I_z\,\omega_z - I_{zx}\,\omega_x - I_{zy}\,\omega_y)$$

For constant inertia, expanding the time derivative of the above equation yields

$$\Sigma M_x = (I_x\,\dot{\omega}_x - I_{xy}\,\dot{\omega}_y - I_{xz}\dot{\omega}_z) - \Omega_z\,(I_y\,\omega_y - I_{yz}\,\omega_z - I_{yx}\,\omega_x) + \Omega_y\,(I_z\,\omega_z - I_{zx}\omega_x - I_{zy}\,\omega_y) \qquad \textbf{Ans.}$$

One can obtain y and z components in a similar manner.

© 2010 Pearson Education, Inc., Upper Saddle River, NJ. All rights reserved. This material is protected under all copyright laws as they currently exist. No portion of this material may be reproduced, in any form or by any means, without permission in writing from the publisher.

21–42. Derive the Euler equations of motion for $\boldsymbol{\Omega} \neq \boldsymbol{\omega}$, i.e., Eqs. 21–26.

In general

$$\mathbf{M} = \frac{d}{dt}(H_x\,\mathbf{i} + H_y\,\mathbf{j} + H_z\,\mathbf{k})$$

$$= \left(\dot{H}_x\,\mathbf{i} + \dot{H}_y\mathbf{j} + \dot{H}_z\,\mathbf{k}\right)_{xyz} + \Omega \times (H_x\,\mathbf{i} + H_y\mathbf{j} + H_z\,\mathbf{k})$$

Substitute $\Omega = \Omega_x\,\mathbf{i} + \Omega_y\,\mathbf{j} + \Omega_z\,\mathbf{k}$ and expanding the cross product yields

$$\mathbf{M} = \left(\left(\dot{H}_x\right)_{xyz} - \Omega_z H_y + \Omega_y H_z\right)\mathbf{i} + \left(\left(\dot{H}_y\right)_{xyz} - \Omega_x H_z + \Omega_z H_x\right)\mathbf{j} + \left(\left(\dot{H}_z\right)_{xyz} - \Omega_y H_x + \Omega_x H_y\right)\mathbf{k}$$

Substitute H_x, H_y and H_z using Eq. 21–10. For the **i** component

$$\Sigma M_x = \frac{d}{dt}(I_x\,\omega_x - I_{xy}\,\omega_y - I_{xz}\,\omega_z) - \Omega_z\,(I_y\,\omega_y - I_{yz}\,\omega_z - I_{yx}\omega_x) + \Omega_y\,(I_z\,\omega_z - I_{zx}\,\omega_x - I_{zy}\,\omega_y)$$

Set $I_{xy} = I_{yz} = I_{zx} = 0$ and require I_x, I_y, I_z to be constant. This yields

$$\Sigma M_x = I_x\,\dot{\omega}_x - I_y\,\Omega_z\,\omega_y + I_z\,\Omega_y\omega_z \qquad \textbf{Ans.}$$

One can obtain y and z components in a similar manner.

© 2010 Pearson Education, Inc., Upper Saddle River, NJ. All rights reserved. This material is protected under all copyright laws as they currently exist. No portion of this material may be reproduced, in any form or by any means, without permission in writing from the publisher.

21–43. The uniform rectangular plate has a mass of $m = 2$ kg and is given a rotation of $\omega = 4$ rad/s about its bearings at A and B. If $a = 0.2$ m and $c = 0.3$ m, determine the vertical reactions at A and B at the instant the plate is vertical as shown. Use the x, y, z axes shown and note that $I_{zx} = -\left(\frac{mac}{12}\right)\left(\frac{c^2 - a^2}{c^2 + a^2}\right)$.

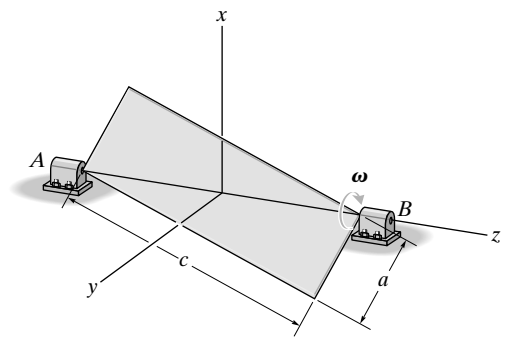

$$\omega_x = 0, \qquad \omega_y = 0, \qquad \omega_z = -4$$

$$\dot{\omega}_x = 0, \qquad \dot{\omega}_y = 0, \qquad \dot{\omega}_z = 0$$

$$\Sigma M_y = I_{yy}\,\dot{\omega}_y - (I_{zz} - I_{xx})\omega_z\,\omega_x - I_{yz}\left(\dot{\omega}_z - \omega_x\,\omega_y\right) - I_{zx}\left(\omega_z^2 - \omega_x^2\right) - I_{xy}\left(\dot{\omega}_x + \omega_y\,\omega_z\right)$$

$$B_x\left[\left(\frac{a}{2}\right)^2 + \left(\frac{c}{2}\right)^2\right]^{\frac{1}{2}} - A_x\left[\left(\frac{a}{2}\right)^2 + \left(\frac{c}{2}\right)^2\right]^{\frac{1}{2}} = -I_{zx}\,(\omega)^2$$

$$B_x - A_x = \left(\frac{mac}{6}\right)\left(\frac{c^2 - a^2}{\left[a^2 + c^2\right]^{\frac{3}{2}}}\right)\omega^2$$

$$\Sigma F_x = m(a_G)_x\,; \qquad A_x + B_x - mg = 0$$

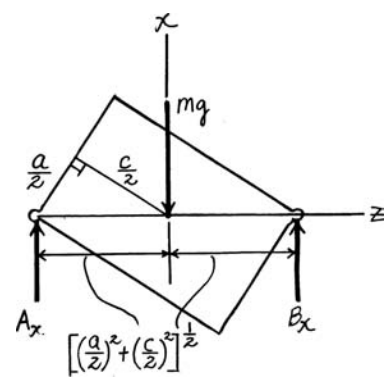

Substitute the data,

$$B_x - A_x = \frac{2(0.2)(0.3)}{6}\left[\frac{(0.3)^2 - (0.2)^2}{\left[(0.3)^2 + (0.2)^2\right]^{\frac{3}{2}}}\right](-4)^2 = 0.34135$$

$$A_x + B_x = 2(9.81)$$

Solving:

$A_x = 9.64$ N **Ans.**

$B_x = 9.98$ N **Ans.**

© 2010 Pearson Education, Inc., Upper Saddle River, NJ. All rights reserved. This material is protected under all copyright laws as they currently exist. No portion of this material may be reproduced, in any form or by any means, without permission in writing from the publisher.

***21–44.** The disk, having a mass of 3 kg, is mounted eccentrically on shaft *AB*. If the shaft is rotating at a constant rate of 9 rad/s, determine the reactions at the journal bearing supports when the disk is in the position shown.

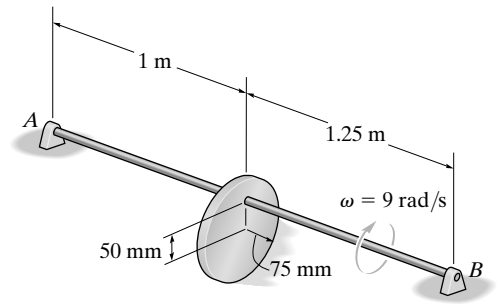

$\omega_x = 0, \qquad \omega_y = -9, \qquad \omega_z = 0$

$\Sigma M_x = I_x \dot{\omega}_x - (I_y - I_z)\omega_y \omega_z$

$B_z(1.25) - A_z(1) = 0 - 0$

$\Sigma M_z = I_z \dot{\omega}_z - (I_x - I_y)\omega_x \omega_y$

$A_x(1) - B_x(1.25) = 0 - 0$

$\Sigma F_x = ma_x; \qquad A_x + B_x = 0$

$\Sigma F_z = ma_z; \qquad A_z + B_z - 3(9.81) = 3(9)^2(0.05)$

Solving,

$A_x = B_x = 0$ **Ans.**

$A_z = 23.1$ N **Ans.**

$B_z = 18.5$ N **Ans.**

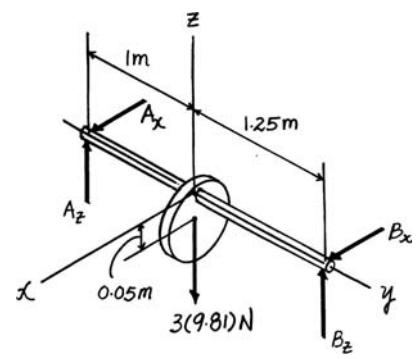

© 2010 Pearson Education, Inc., Upper Saddle River, NJ. All rights reserved. This material is protected under all copyright laws as they currently exist. No portion of this material may be reproduced, in any form or by any means, without permission in writing from the publisher.

•21–45. The slender rod AB has a mass m and it is connected to the bracket by a smooth pin at A. The bracket is rigidly attached to the shaft. Determine the required constant angular velocity of $\boldsymbol{\omega}$ of the shaft, in order for the rod to make an angle of θ with the vertical.

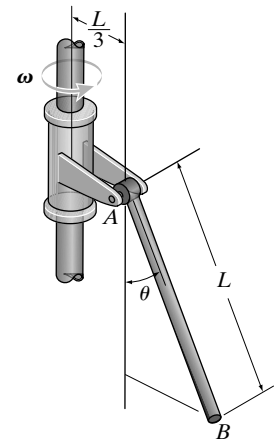

The rotating xyz frame is set with its origin at the rod's mass center, Fig. a. This frame will be attached to the rod so that its angular velocity is $\Omega = \omega$ and the x, y, z axes will always be the principal axes of inertia. Referring to Fig. b,

$$\omega = -\omega \cos\theta \mathbf{j} + \omega \sin\theta \mathbf{k}$$

Thus,

$$\omega_x = 0 \qquad \omega_y = -\omega\cos\theta \qquad \omega_z = \omega\sin\theta$$

Since both the direction and the magnitude is constant $\dot{\omega} = \mathbf{0}$. Also, since $\Omega = \omega$, $\left(\dot{\omega}_{xyz}\right) = \dot{\omega} = 0$. Thus,

$$\dot{\omega}_x = \dot{\omega}_y = \dot{\omega}_z = 0$$

The mass moments of inertia of the rod about the x, y, z axes are

$$I_x = I_z = \frac{1}{12}mL^2 \qquad I_y = 0$$

Applying the equation of motion and referring to the free-body diagram of the rod, Fig. a,

$$\Sigma M_x = I_x\dot{\omega}_x - \left(I_y - I_z\right)\omega_y\omega_z; \; -A_z\left(\frac{L}{2}\right) = 0 - \left(0 - \frac{1}{12}mL^2\right)(-\omega\cos\theta)(\omega\sin\theta)$$

$$A_z = \frac{m\omega^2 L}{6}\sin\theta\cos\theta \qquad \textbf{(1)}$$

The acceleration of the mass center of the rod can be determined from $a_G = \omega^2 r = \omega^2\left(\frac{L}{2}\sin\theta + \frac{L}{3}\right) = \frac{\omega^2 L}{6}(3\sin\theta + 2)$ and is directed as shown in Fig. c. Thus,

$$\Sigma F_z = m(a_G)_z; \qquad A_z - mg\sin\theta = -\frac{m\omega^2 L}{6}(3\sin\theta + 2)\cos\theta$$

$$A_z = mg\sin\theta = -\frac{m\omega^2 L}{6}(3\sin\theta + 2)\cos\theta \qquad \textbf{(2)}$$

Equating Eqs. (1) and (2),

$$\frac{m\omega^2 L}{6}\sin\theta\cos\theta = mg\sin\theta - \frac{m\omega^2 L}{6}(3\sin\theta + 2)\cos\theta$$

$$\omega = \sqrt{\frac{3g\tan\theta}{L(2\sin\theta + 1)}} \qquad \textbf{Ans.}$$

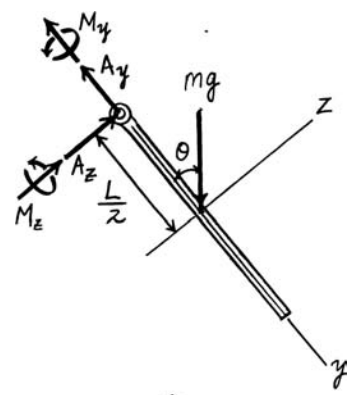

(a)

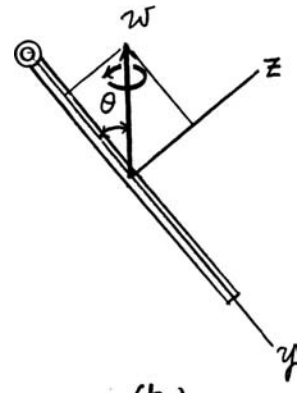

(b)

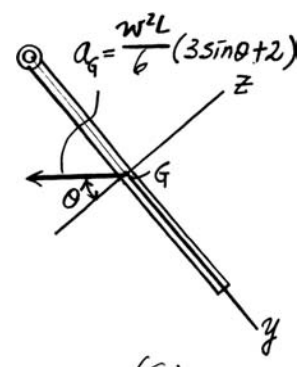

(c)

© 2010 Pearson Education, Inc., Upper Saddle River, NJ. All rights reserved. This material is protected under all copyright laws as they currently exist. No portion of this material may be reproduced, in any form or by any means, without permission in writing from the publisher.

21–46. The 5-kg rod AB is supported by a rotating arm. The support at A is a journal bearing, which develops reactions normal to the rod. The support at B is a thrust bearing, which develops reactions both normal to the rod and along the axis of the rod. Neglecting friction, determine the x, y, z components of reaction at these supports when the frame rotates with a constant angular velocity of $\omega = 10$ rad/s.

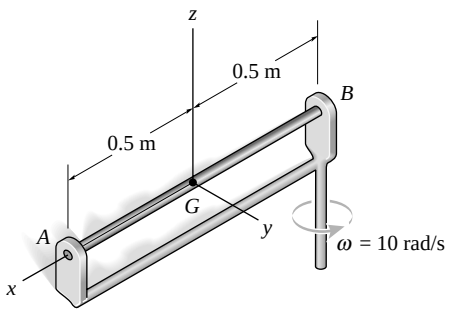

$$I_y = I_z = \frac{1}{12}(5)(1)^2 = 0.4167 \text{ kg}\cdot\text{m}^2 \qquad I_x = 0$$

Applying Eq. 21–25 with $\omega_x = \omega_y = 0$ $\omega_z = 10$ rad/s $\dot{\omega}_x = \dot{\omega}_y = \dot{\omega}_z = 0$

$\Sigma M_x = I_x\dot{\omega}_x - (I_y - I_z)\omega_y\omega_z;\qquad 0 = 0$

$\Sigma M_y = I_y\dot{\omega}_y - (I_z - I_x)\omega_z\omega_x;\qquad B_z(0.5) - A_z(0.5) = 0$ **(1)**

$\Sigma M_z = I_z\dot{\omega}_z - (I_x - I_y)\omega_x\omega_y;\qquad A_y(0.5) - B_y(0.5) = 0$ **(2)**

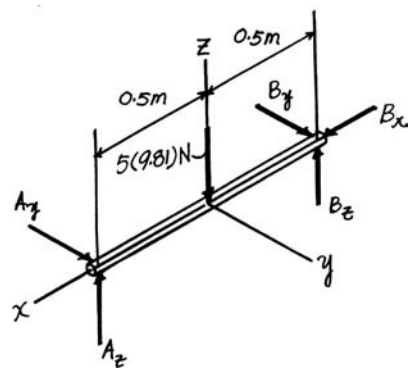

Also,

$\Sigma F_x = m(a_G)_x;\qquad B_x = -5(10)^2(0.5)\qquad B_x = -250\text{N}$ **Ans.**

$\Sigma F_y = m(a_G)_y;\qquad A_y + B_y = 0$ **(3)**

$\Sigma F_z = m(a_G)_z;\qquad A_z + B_z - 5(9.81) = 0$ **(4)**

Solving Eqs. (1) to (4) yields:

$$A_y = B_y = 0 \qquad A_z = B_z = 24.5\text{ N}$$ **Ans.**

21–47. The car travels around the curved road of radius ρ such that its mass center has a constant speed v_G. Write the equations of rotational motion with respect to the x, y, z axes. Assume that the car's six moments and products of inertia with respect to these axes are known.

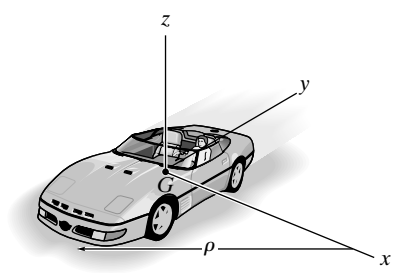

Applying Eq. 21–24 with $\omega_x = 0,\qquad \omega_y = 0,\qquad \omega_z = \dfrac{v_G}{\rho},$

$\omega_x = \omega_y = \omega_z = 0$

$$\Sigma M_x = -I_{yz}\left[0 - \left(\frac{v_G}{\rho}\right)^2\right] = \frac{I_{yz}}{\rho^2}v_G^2$$ **Ans.**

$$\Sigma M_y = -I_{zx}\left[\left(\frac{v_G}{\rho}\right)^2 - 0\right] = -\frac{I_{zx}}{\rho^2}v_G^2$$ **Ans.**

$$\Sigma M_z = 0$$ **Ans.**

Note: This result indicates the normal reactions of the tires on the ground are not all necessarily equal. Instead, they depend upon the speed of the car, radius of curvature, and the products of inertia I_{yz} and I_{zx}. (See Example 13–6.)

© 2010 Pearson Education, Inc., Upper Saddle River, NJ. All rights reserved. This material is protected under all copyright laws as they currently exist. No portion of this material may be reproduced, in any form or by any means, without permission in writing from the publisher.

***21–48.** The shaft is constructed from a rod which has a mass per unit length of 2 kg/m. Determine the x, y, z components of reaction at the bearings A and B if at the instant shown the shaft spins freely and has an angular velocity of $\omega = 30$ rad/s. What is the angular acceleration of the shaft at this instant? Bearing A can support a component of force in the y direction, whereas bearing B cannot.

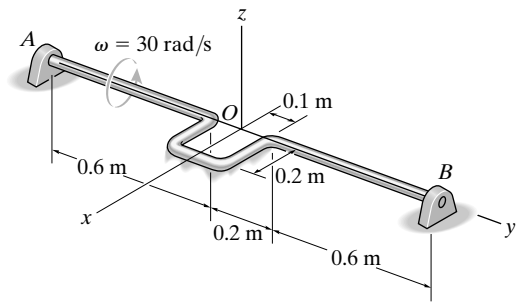

$$\Sigma W = \left[3(0.2) + 1.2\right](2)(9.81) = 35.316 \text{ N}$$

$$\Sigma \bar{x}W = 0\left[1.2(2)(9.81)\right] + 0.1\left[0.4(2)(9.81)\right] + 0.2\left[0.2(2)(9.81)\right] = 1.5696 \text{ N}\cdot\text{m}$$

$$\bar{x} = \frac{\Sigma \bar{x}W}{\Sigma W} = \frac{1.5696}{35.316} = 0.04444 \text{ m}$$

$$I_x = 2\left[\frac{1}{3}\left[0.2(2)\right](0.2)^2\right] + \left[0.2(2)\right](0.2)^2 = 0.02667 \text{ kg}\cdot\text{m}^2$$

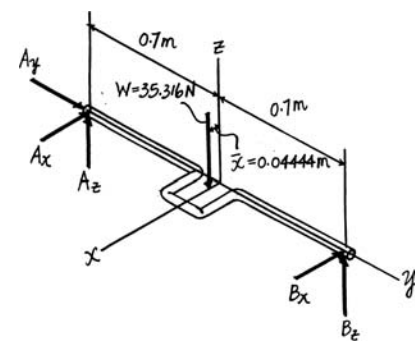

Applying Eq. 21–25 with $\omega_x = \omega_z = 0$ $\omega_y = 30$ rad/s $\dot{\omega}_x = \dot{\omega}_z = 0$

$\Sigma M_x = I_x\dot{\omega}_x - (I_y - I_z)\omega_y\omega_z$; $\quad B_z(0.7) - A_z(0.7) = 0$ **(1)**

$\Sigma M_y = I_y\dot{\omega}_y - (I_z - I_x)\omega_z\omega_x$; $\quad 35.316(0.04444) = 0.02667\dot{\omega}_y$

$\dot{\omega}_y = 58.9 \text{ rad/s}^2$ **Ans.**

$\Sigma M_z = I_z\dot{\omega}_z - (I_x - I_y)\omega_x\omega_y$; $\quad B_x(0.7) - A_x(0.7) = 0$ **(2)**

Also,

$\Sigma F_x = m(a_G)_x$; $\quad -A_x - B_x = -1.8(2)(0.04444)(30)^2$ **(3)**

$\Sigma F_y = m(a_G)_y$; $\quad A_y = 0$ **Ans.**

$\Sigma F_z = m(a_G)_z$; $\quad A_z + B_z - 35.316 = -1.8(2)(0.04444)(58.9)$ **(4)**

Solving Eqs. (1) to (4) yields:

$A_x = B_x = 72.0$ N $\quad A_z = B_z = 12.9$ N **Ans.**

© 2010 Pearson Education, Inc., Upper Saddle River, NJ. All rights reserved. This material is protected under all copyright laws as they currently exist. No portion of this material may be reproduced, in any form or by any means, without permission in writing from the publisher.

•21–49. Four spheres are connected to shaft AB. If $m_C = 1$ kg and $m_E = 2$ kg, determine the mass of spheres D and F and the angles of the rods, θ_D and θ_F, so that the shaft is dynamically balanced, that is, so that the bearings at A and B exert only vertical reactions on the shaft as it rotates. Neglect the mass of the rods.

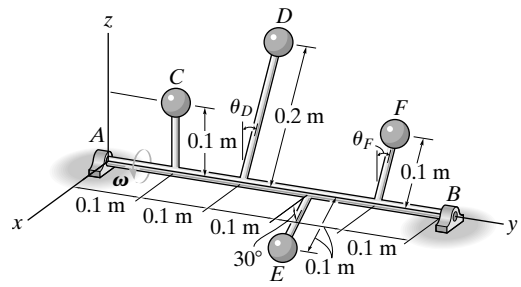

For $\bar{x} = 0$; $\Sigma \bar{x}_1 m_1 = 0$

$$(0.1 \cos 30°)(2) - (0.1 \sin \theta_F)m_F - (0.2 \sin \theta_D)m_D = 0 \qquad \textbf{(1)}$$

For $\bar{z} = 0$; $\Sigma \bar{z}_1 m_1 = 0$

$$(0.1)(1) - (0.1 \sin 30°)(2) + (0.2 \cos \theta_D)m_D + (0.1 \cos \theta_F)m_F = 0 \qquad \textbf{(2)}$$

For $I_{xz} = 0$; $\Sigma \bar{x}_1 \bar{z}_1 m_1 = 0$

$$-(0.2)(0.2 \sin \theta_D)m_D + (0.3)(0.1 \cos 30°)(2) - (0.4)(0.1 \sin \theta_F)m_F = 0 \qquad \textbf{(3)}$$

For $I_{xy} = 0$; $\Sigma \bar{x}_1 \bar{y}_1 m_1 = 0$

$$(0.1)(0.1)(1) + (0.2)(0.2 \cos \theta_D)m_D - (0.3)(0.1 \sin 30°)(2) + (0.1 \cos \theta_F)(0.4)(m_F) = 0 \qquad \textbf{(4)}$$

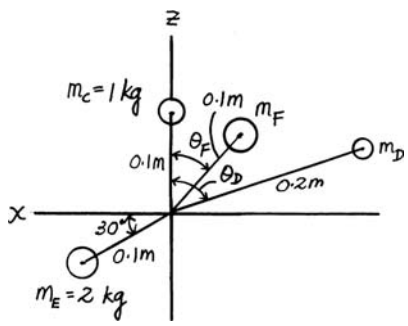

Solving,

$$\theta_D = 139° \qquad \textbf{Ans.}$$

$$m_D = 0.661 \text{ kg} \qquad \textbf{Ans.}$$

$$\theta_F = 40.9° \qquad \textbf{Ans.}$$

$$m_F = 1.32 \text{ kg} \qquad \textbf{Ans.}$$

© 2010 Pearson Education, Inc., Upper Saddle River, NJ. All rights reserved. This material is protected under all copyright laws as they currently exist. No portion of this material may be reproduced, in any form or by any means, without permission in writing from the publisher.

21–50. A man stands on a turntable that rotates about a vertical axis with a constant angular velocity of $\omega_p = 10$ rad/s. If the wheel that he holds spins with a constant angular speed of $\omega_s = 30$ rad/s, determine the magnitude of moment that he must exert on the wheel to hold it in the position shown. Consider the wheel as a thin circular hoop (ring) having a mass of 3 kg and a mean radius of 300 mm.

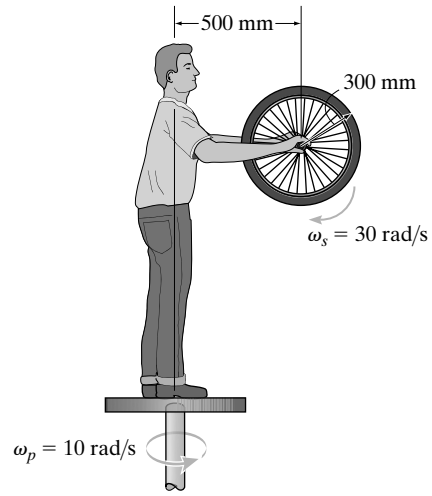

The rotating xyz frame will be set with an angular velocity of $\Omega = \omega_P = [10\mathbf{k}]$ rad/s. Since the wheel is symmetric about its spinning axis, the x, y, and z axes will remain as the principle axes of inertia. Thus,

$$I_y = I_z = \frac{1}{2}mr^2 = \frac{1}{2}(3)\left(0.3^2\right) = 0.135 \text{ kg}\cdot\text{m}^2$$

$$I_x = mr^2 = 3\left(0.3^2\right) = 0.27 \text{ kg}\cdot\text{m}^2$$

The angular velocity of the wheel is $\omega = \omega_s + \omega_P = [-30\mathbf{i} + 10\mathbf{k}]$ rad/s. Thus,

$$\omega_x = -30 \text{ rad/s} \qquad \omega_y = 0 \qquad \omega_z = 10 \text{ rad/s}$$

Since the directions of ω_s and ω_p do not change with respect to the xyz frame and their magnitudes are constant, $\dot{\omega}_{xyz} = 0$. Thus,

$$\dot{\omega}_x = \dot{\omega}_y = \dot{\omega}_z = 0$$

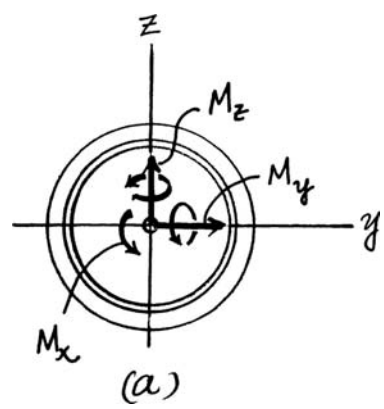

Applying the equations of motion and referring to the free-body diagram shown in Fig. *a*,

$$\Sigma M_x = I_x\dot{\omega}_x - I_y\Omega_z\omega_y + I_z\Omega_y\omega_z; \qquad M_x = 0$$

$$\Sigma M_y = I_y\dot{\omega}_y - I_z\Omega_x\omega_z + I_x\Omega_z\omega_x; \qquad M_y = 0 - 0 + 0.27(10)(-30) = -81.0 \text{ N}\cdot\text{m}$$

$$\Sigma M_z = I_z\dot{\omega}_z - I_x\Omega_y\omega_x + I_y\Omega_x\omega_y; \qquad M_z = 0$$

Thus,

$$M = \sqrt{M_x{}^2 + M_y{}^2 + M_z{}^2} = \sqrt{0^2 + (-81.0)^2 + 0^2} = 81.0 \text{ N}\cdot\text{m} \qquad \textbf{Ans.}$$

© 2010 Pearson Education, Inc., Upper Saddle River, NJ. All rights reserved. This material is protected under all copyright laws as they currently exist. No portion of this material may be reproduced, in any form or by any means, without permission in writing from the publisher.

21–51. The 50-lb disk spins with a constant angular rate of $\omega_1 = 50$ rad/s about its axle. Simultaneously, the shaft rotates with a constant angular rate of $\omega_2 = 10$ rad/s. Determine the x, y, z components of the moment developed in the arm at A at the instant shown. Neglect the weight of arm AB.

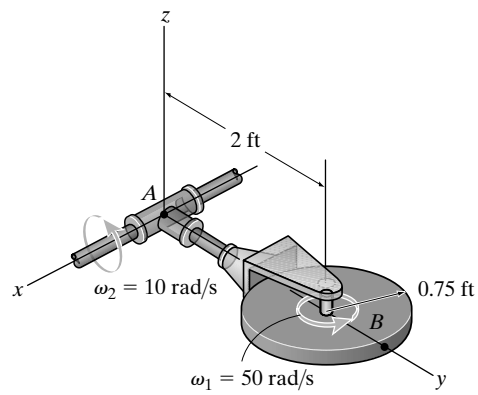

The rotating xyz frame is established as shown in Fig. a. This frame will be set to have an angular velocity of $\Omega = \omega_2 = [10\mathbf{i}]$ rad/s. Since the disk is symmetric about its spinning axis, the x, y, and z axes will remain as the principle axes of inertia. Thus,

$$I_x = I_y = \frac{1}{4}\left(\frac{50}{32.2}\right)\left(0.75^2\right) = 0.2184 \text{ slug}\cdot\text{ft}^2$$

$$I_z = \frac{1}{2}\left(\frac{50}{32.2}\right)\left(0.75^2\right) = 0.4367 \text{ slug}\cdot\text{ft}^2$$

The angular velocity of the disk is $\omega = \omega_s + \omega_p = [10\mathbf{i} + 50\mathbf{k}]$ rad/s. Thus,

$$\omega_x = 10 \text{ rad/s} \qquad \omega_y = 0 \qquad \omega_z = 50 \text{ rad/s}$$

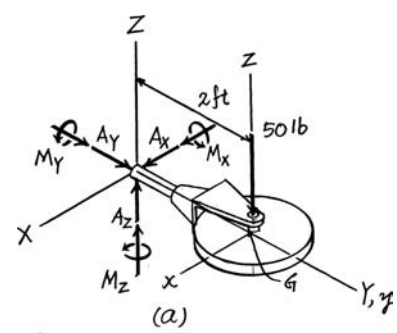

Since the directions of ω_1 and ω_2 do not change with respect to the xyz frame and their magnitudes are constant, $\dot{\omega}_{xyz} = \mathbf{0}$. Thus,

$$\dot{\omega}_x = \dot{\omega}_y = \dot{\omega}_z = 0$$

Applying the equations of motion and referring to the free-body diagram shown in Fig. a,

$$\Sigma M_x = I_x\dot{\omega}_x - I_y\Omega_z\omega_y + I_z\Omega_y\omega_z; \qquad M_X - A_Z(2) = 0 \qquad \textbf{(1)}$$

$$\Sigma M_y = I_y\dot{\omega}_y - I_z\Omega_x\omega_z + I_x\Omega_z\omega_x; \qquad M_Y = 0 - 0.4367(10)(50) + 0$$

$$M_Y = -218.36 \text{ lb}\cdot\text{ft} = -218 \text{ lb}\cdot\text{ft} \qquad \textbf{Ans.}$$

$$\Sigma M_z = I_z\dot{\omega}_z - I_x\Omega_y\omega_{zx} + I_y\Omega_x\omega_y; \qquad M_Z = 0 - 0 + 0$$

$$M_Z = 0 \qquad \textbf{Ans.}$$

Since the mass center of the disk rotates about the X axis with a constant angular velocity of $\omega_1 = [10\mathbf{i}]$ rad/s, its acceleration is $\mathbf{a}_G = \dot{\omega}_2 \times \mathbf{r}_G - \omega^2\mathbf{r}_G = \mathbf{0} - 10^2(2\mathbf{j}) = [-200\mathbf{j}]$ ft/s^2. Thus,

$$\Sigma F_Z = m(a_G)_Z; \qquad A_Z - 50 = \frac{50}{32.2}(0) \quad A_Z = 50 \text{ lb}$$

Substituting this result into Eq. (1), we have

$$M_X = 100 \text{ lb}\cdot\text{ft} \qquad \textbf{Ans.}$$

© 2010 Pearson Education, Inc., Upper Saddle River, NJ. All rights reserved. This material is protected under all copyright laws as they currently exist. No portion of this material may be reproduced, in any form or by any means, without permission in writing from the publisher.

***21–52.** The man stands on a turntable that rotates about a vertical axis with a constant angular velocity of $\omega_1 = 6$ rad/s. If he tilts his head forward at a constant angular velocity of $\omega_2 = 1.5$ rad/s about point O, determine the magnitude of the moment that must be resisted by his neck at O at the instant $\theta = 30°$. Assume that his head can be considered as a uniform 10-lb sphere, having a radius of 4.5 in. and center of gravity located at G, and point O is on the surface of the sphere.

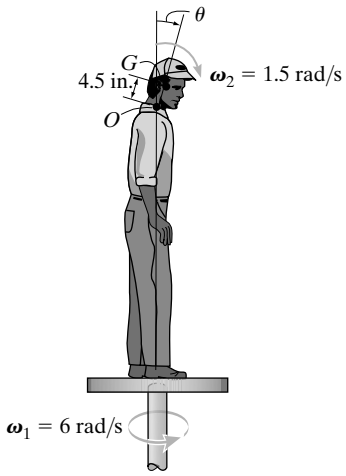

The rotating xyz frame shown in Fig. a will be attached to the head so that it rotates with an angular velocity of $\Omega = \omega$, where $\omega = \omega_1 + \omega_2$. Referring to Fig. b, $\omega_1 = [6 \cos 30° \mathbf{j} + 6 \sin 30° \mathbf{k}]$ rad/s $= [5.196\mathbf{j} + 3\mathbf{k}]$ rad/s. Thus, $\omega = [-1.5\mathbf{i} + 5.196\mathbf{j} + 3\mathbf{k}]$ rad/s. Then

$$\omega_x = -1.5 \text{ rad/s} \qquad \omega_y = 5.196 \text{ rad/s} \qquad \omega_z = 3 \text{ rad/s}$$

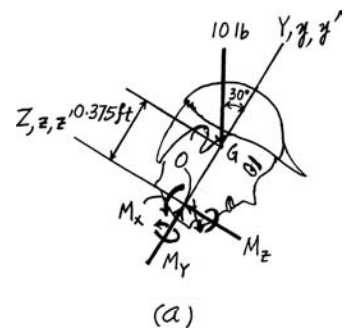

The angular acceleration of the head $\dot{\omega}$ with respect to the XYZ frame can be obtained by setting another $x'y'z'$ frame having an angular velocity of $\Omega' = \omega_1 = [5.196\mathbf{j} + 3\mathbf{k}]$ rad/s. Thus

$$\begin{aligned}
\dot{\omega} &= \left(\dot{\omega}_{x'y'z'}\right) + \Omega' \times \omega \\
&= (\dot{\omega}_1)_{x'y'z'} + (\dot{\omega}_2)_{x'y'z'} + \Omega' \times \omega_1 + \Omega' \times \omega_2 \\
&= 0 + 0 + 0 + (5.196\mathbf{j} + 3\mathbf{k}) \times (-1.5\mathbf{i}) \\
&= [-4.5\mathbf{j} + 7.794\mathbf{k}] \text{ rad/s}^2
\end{aligned}$$

Since $\Omega = \omega$, $\dot{\omega}_{x'y'z'} = \dot{\omega} = [-4.5\mathbf{j} + 7.794\mathbf{k}]$ rad/s^2. Thus,

$$\dot{\omega}_x = 0 \qquad \dot{\omega}_y = -4.5 \text{ rad/s}^2 \qquad \dot{\omega}_z = 7.794 \text{ rad/s}^2$$

Also, the x, y, z axes will remain as principal axes of inertia. Thus,

$$I_x = I_z = \frac{2}{5}\frac{10}{32.2}\left(0.375^2\right) + \left(\frac{10}{32.2}\right)\left(0.375^2\right) = 0.06114 \text{ slug} \cdot \text{ft}^2$$

$$I_y = \frac{2}{5}\left(\frac{10}{32.2}\right)\left(0.375^2\right) = 0.01747 \text{ slug} \cdot \text{ft}^2$$

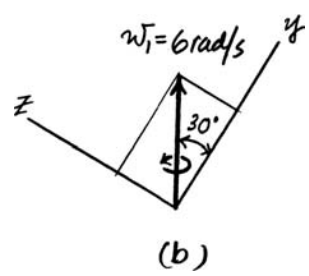

Applying the moment equations of motion and referring to the free-body diagram shown in Fig. a,

$$\Sigma M_x = I_x\dot{\omega}_x - \left(I_y - I_z\right)\omega_y\omega_z; \qquad M_x - 10 \sin 30°(0.375) = 0 - (0.01747 - 0.06114)(5.196)(3)$$

$$M_x = 2.556 \text{ lb} \cdot \text{ft}$$

$$\Sigma M_y = I_y\dot{\omega}_y - (I_z - I_x)\omega_z\omega_x; \qquad M_y = 0.01747(-4.5) - 0 \qquad M_y = -0.07861 \text{ lb} \cdot \text{ft}$$

$$\Sigma M_z = I_z\dot{\omega}_z - (I_x - I_y)\omega_x\omega_y; \qquad M_z = 0.06114(7.794) - (0.06114 - 0.01747)(-1.5)(5.196)$$

$$= 0.8161 \text{ lb} \cdot \text{ft}$$

Thus,

$$M_A = \sqrt{M_x{}^2 + M_y{}^2 + M_z{}^2} = \sqrt{2.556^2 + (-0.07861)^2 + 0.8161^2} = 2.68 \text{ lb} \cdot \text{ft} \qquad \textbf{Ans.}$$

© 2010 Pearson Education, Inc., Upper Saddle River, NJ. All rights reserved. This material is protected under all copyright laws as they currently exist. No portion of this material may be reproduced, in any form or by any means, without permission in writing from the publisher.

•21–53. The blades of a wind turbine spin about the shaft S with a constant angular speed of ω_s, while the frame precesses about the vertical axis with a constant angular speed of ω_p. Determine the x, y, and z components of moment that the shaft exerts on the blades as a function of θ. Consider each blade as a slender rod of mass m and length l.

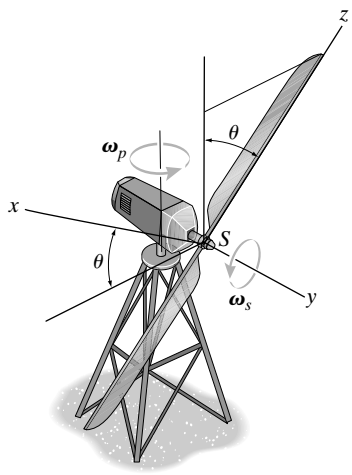

The rotating xyz frame shown in Fig. a will be attached to the blade so that it rotates with an angular velocity of $\Omega = \omega$, where $\omega = \omega_s + \omega_p$. Referring to Fig. b $\omega_p = \omega_p \sin\theta\mathbf{i} + \omega_p \cos\theta\mathbf{k}$. Thus, $\omega = \omega_p \sin\theta\mathbf{i} + \omega_s\mathbf{j} + \omega_p \cos\theta\mathbf{k}$. Then

$$\omega_x = \omega_p \sin\theta \qquad \omega_y = \omega_s \quad \omega_z = \omega_p \cos\theta$$

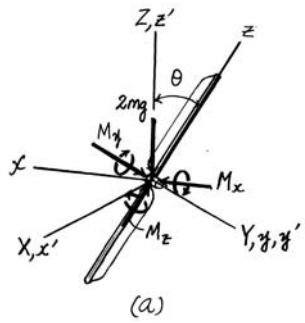

(a)

The angular acceleration of the blade $\dot{\omega}$ with respect to the XYZ frame can be obtained by setting another $x'y'z'$ frame having an angular velocity of $\Omega' = \omega_p = \omega_p \sin\theta\mathbf{i} + \omega_p \cos\theta\mathbf{k}$. Thus,

$$\begin{aligned}
\dot{\omega} &= \left(\dot{\omega}_{x'y'z'}\right) + \Omega' \times \omega \\
&= (\dot{\omega}_1)_{x'y'z'} + (\dot{\omega}_2)_{x'y'z'} + \Omega' \times \omega_S + \Omega' \times \omega_P \\
&= \mathbf{0} + \mathbf{0} + \left(\omega_p \sin\theta\mathbf{i} + \omega_p \cos\theta\mathbf{k}\right) \times (\omega_s\mathbf{j}) + \mathbf{0} \\
&= -\omega_s\omega_p \cos\theta\mathbf{i} + \omega_s\omega_p \sin\theta\mathbf{k}
\end{aligned}$$

Since $\Omega = \omega$, $\dot{\omega}_{x'y'z'} = \dot{\omega}$. Thus,

$$\dot{\omega}_x = -\omega_s\omega_p \cos\theta \qquad \dot{\omega}_y = 0 \qquad \dot{\omega}_z = \omega_s\omega_p \sin\theta$$

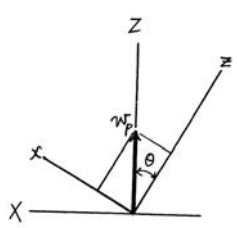

(b)

Also, the x, y, and z axes will remain as principle axes of inertia for the blade. Thus,

$$I_x = I_y = \frac{1}{12}(2m)(2l)^2 = \frac{2}{3}ml^2 \qquad I_z = 0$$

Applying the moment equations of motion and referring to the free-body diagram shown in Fig. a,

$$\Sigma M_x = I_x\dot{\omega}_x - \left(I_y - I_z\right)\omega_y\omega_z; \qquad M_x = \frac{2}{3}ml^2(-\omega_s\omega_p \cos\theta) - \left(\frac{2}{3}ml^2 - 0\right)(\omega_s)(\omega_p \cos\theta)$$

$$= -\frac{4}{3}ml^2\,\omega_s\omega_p \cos\theta \qquad \textbf{Ans.}$$

$$\Sigma M_y = I_y\dot{\omega}_y - \left(I_z - I_x\right)\omega_z\omega_x; \qquad M_y = 0 - \left(0 - \frac{2}{3}ml^2\right)(\omega_p \cos\theta)(\omega_p \sin\theta)$$

$$= \frac{1}{3}ml^2\,\omega_p{}^2 \sin 2\theta \qquad \textbf{Ans.}$$

$$\Sigma M_z = I_z\dot{\omega}_z - (I_x - I_y)\omega_x\omega_y; \qquad M_z = 0 - 0 = 0 \qquad \textbf{Ans.}$$

© 2010 Pearson Education, Inc., Upper Saddle River, NJ. All rights reserved. This material is protected under all copyright laws as they currently exist. No portion of this material may be reproduced, in any form or by any means, without permission in writing from the publisher.

21–54. Rod CD of mass m and length L is rotating with a constant angular rate of ω_1 about axle AB, while shaft EF rotates with a constant angular rate of ω_2. Determine the X, Y, and Z components of reaction at thrust bearing E and journal bearing F at the instant shown. Neglect the mass of the other members.

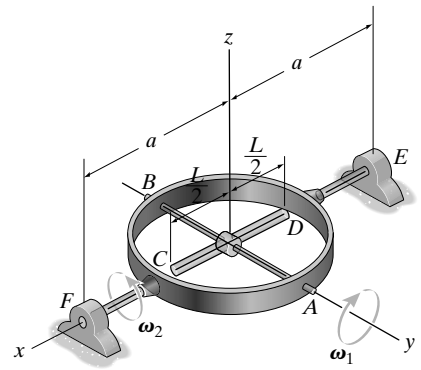

The rotating xyz frame shown in Fig. a will be attached to the rod so that it rotates with an angular velocity of $\Omega = \omega$, where $\omega = \omega_1 + \omega_2 = \omega_2\mathbf{i} - \omega_1\mathbf{j}$. Thus,

$$\omega_x = \omega_2 \qquad \omega_y = -\omega_1 \qquad \omega_z = 0$$

The angular acceleration of the rod $\dot{\omega}$ with respect to the XYZ frame can be obtained by using another rotating $x'y'z'$ frame having an angular velocity of $\Omega' = \omega_2 = \omega_2\mathbf{i}$. Fig. a. Thus,

$$\begin{aligned}\dot{\omega} &= \left(\dot{\omega}_{x'y'z'}\right) + \Omega' \times \omega \\ &= (\dot{\omega}_1)_{x'y'z'} + (\dot{\omega}_2)_{x'y'z'} + \Omega' \times \omega_1 + \Omega' \times \omega_2 \\ &= 0 + 0 + \left(\omega_2\mathbf{i}\right) \times (-\omega_1\mathbf{j}) + \mathbf{0} \\ &= -\omega_1\omega_2\mathbf{k}\end{aligned}$$

Since $\Omega = \omega$, $\dot{\omega}_{x'y'z'} = \dot{\omega}$. Thus,

$$\dot{\omega}_x = \dot{\omega}_y = 0 \qquad \dot{\omega}_z = -\omega_1\omega_2$$

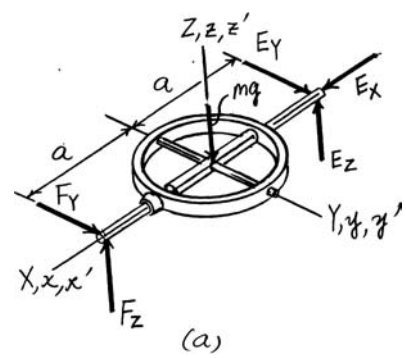

Also, the x, y, and z axes will remain as principal axes of inertia for the rod. Thus,

$$I_x = 0 \qquad I_y = I_z = \frac{1}{12}mL^2$$

Applying the equations of motion and referring to the free-body diagram shown in Fig. a,

$$\Sigma M_x = I_x\dot{\omega}_x - \left(I_y - I_z\right)\omega_y\omega_z;\ 0 = 0$$

$$\Sigma M_y = I_y\dot{\omega}_y - \left(I_z - I_x\right)\omega_z\omega_x;\ E_Z(a) - F_Z(a) = 0 - 0$$

$$E_Z - F_Z = 0 \qquad \textbf{(1)}$$

$$\Sigma M_z = I_z\dot{\omega}_z - (I_x - I_y)\omega_x\omega_y;\ F_Y(a) - E_Y(a) = \frac{1}{12}mL^2(-\omega_1\,\omega_2) - \left(0 - \frac{1}{12}mL^2\right)(\omega_2)(-\omega_1)$$

$$F_Y - E_Y = -\frac{mL^2\omega_1\omega_2}{6a} \qquad \textbf{(2)}$$

Since the mass center G does not move, $\mathbf{a}_G = \mathbf{0}$. Thus,

$$\Sigma F_X = m(a_G)_X; \qquad E_X = 0 \qquad \textbf{Ans.}$$

$$\Sigma F_Y = m(a_G)_Y; \qquad F_Y + E_Y = 0 \qquad \textbf{(3)}$$

$$\Sigma F_Z = m(a_G)_Z; \qquad F_Z + E_Z - mg = 0 \qquad \textbf{(4)}$$

Solving Eqs. (1) through (4),

$$F_Y = -\frac{mL^2\,\omega_1\omega_2}{12a} \qquad E_Y = \frac{mL^2\omega_1\omega_2}{12a} \qquad \textbf{Ans.}$$

$$E_Z = F_Z = \frac{mg}{2} \qquad \textbf{Ans.}$$

© 2010 Pearson Education, Inc., Upper Saddle River, NJ. All rights reserved. This material is protected under all copyright laws as they currently exist. No portion of this material may be reproduced, in any form or by any means, without permission in writing from the publisher.

21–55. If shaft AB is driven by the motor with an angular velocity of $\omega_1 = 50$ rad/s and angular acceleration of $\dot{\omega}_1 = 20$ rad/s^2 at the instant shown, and the 10-kg wheel rolls without slipping, determine the frictional force and the normal reaction on the wheel, and the moment **M** that must be supplied by the motor at this instant. Assume that the wheel is a uniform circular disk.

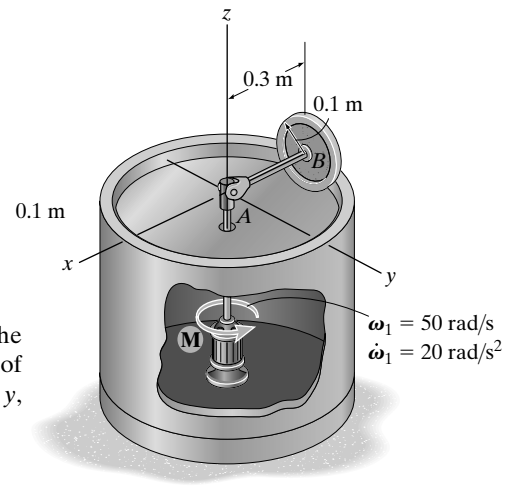

The rotating xyz frame is established to coincide with the fixed XYZ frame at the instant considered, Fig. a. This frame will be set to have an angular velocity of $\Omega = \omega_1 = [50\mathbf{k}]$ rad/s. Since the wheel is symmetric about its spinning axis, the x, y, z axes will remain as the principal axes of inertia. Thus,

$$I_z = I_y = \frac{1}{4}(10)\left(0.1^2\right) + 10\left(0.3^2\right) = 0.925 \text{ kg}\cdot\text{m}^2$$

$$I_x = \frac{1}{2}(10)\left(0.1^2\right) = 0.05 \text{ kg}\cdot\text{m}^2$$

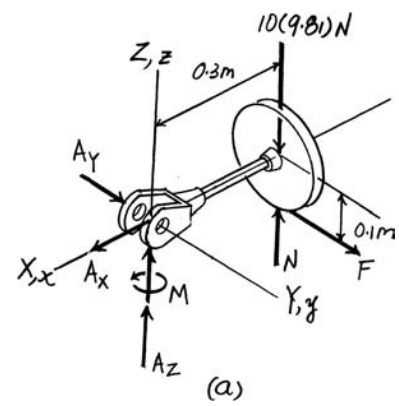

Since the wheel rolls without slipping, the instantaneous axis of zero velocity is shown in Fig. b. Thus

$$\frac{\omega_2}{\omega_1} = \frac{3}{1} \qquad \omega_2 = 3\omega_1 = 3(50) = 150 \text{ rad/s}$$

The angular velocity of the wheel is $\omega = \omega_1 + \omega_2 = [150\mathbf{i} + 50\mathbf{k}]$ rad/s. Then,

$$\omega_x = 150 \text{ rad/s} \qquad \omega_y = 0 \qquad \omega_z = 50 \text{ rad/s}$$

Since the directions of ω_1 and ω_2 do not change with respect to the xyz frame, $\dot{\omega}_{xyz} = (\dot{\omega}_1)_{xyz} + (\dot{\omega}_2)_{xyz}$ where $(\dot{\omega}_2)_{xyz} = 3(\dot{\omega}_1)_{xyz} = 3(20) = 60$ rad/s^2. Thus, $\dot{\omega}_{xyz} = [60\mathbf{i} + 20\mathbf{k}]$ rad/s^2, so that

$$\dot{\omega}_x = 60 \text{ rad/s}^2 \qquad \dot{\omega}_y = 0 \qquad \dot{\omega}_z = 20 \text{ rad/s}^2$$

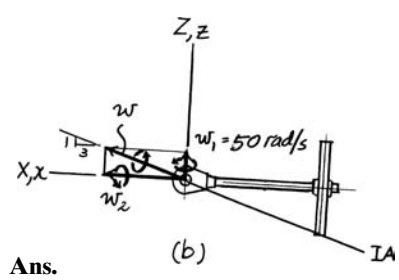

Applying the equations of motion and referring to the free-body diagram shown in Fig. a,

$\Sigma M_x = I_x\dot{\omega}_x - I_y\Omega_z\omega_y + I_z\Omega_y\omega_z;$ $\quad F(0.1) = 0.05(60) - 0 + 0 \quad F = 30\text{N}$ **Ans.**

$\Sigma M_y = I_y\dot{\omega}_y - I_z\Omega_x\omega_z + I_x\Omega_z\omega_x;$ $\quad N(0.3) - 10(9.81)(0.3) = 0 - 0 + 0.05(50)(150)$

$N = 1348.1 \text{ N} = 1.35 \text{ kN}$ **Ans.**

$\Sigma M_z = I_z\dot{\omega}_z - I_x\Omega_y\omega_x + I_y\Omega_x\omega_y;$ $\quad M - 30(0.3) = 0.925(20) - 0 + 0$

$M = 27.5 \text{ N}\cdot\text{m}$ **Ans.**

© 2010 Pearson Education, Inc., Upper Saddle River, NJ. All rights reserved. This material is protected under all copyright laws as they currently exist. No portion of this material may be reproduced, in any form or by any means, without permission in writing from the publisher.

***21–56.** A stone crusher consists of a large thin disk which is pin connected to a horizontal axle. If the axle rotates at a constant rate of 8 rad/s, determine the normal force which the disk exerts on the stones. Assume that the disk rolls without slipping and has a mass of 25 kg. Neglect the mass of the axle.

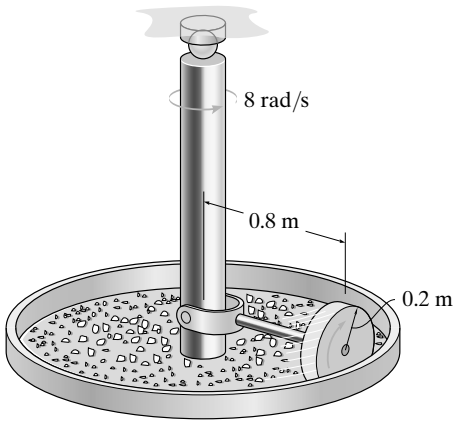

$$I_x = I_z = \frac{1}{4}(25)(0.2)^2 + 25(0.8)^2 = 16.25\ \text{kg}\cdot\text{m}^2$$

$$I_y = \frac{1}{2}(25)(0.2)^2 = 0.5\ \text{kg}\cdot\text{m}^2$$

$$\omega = -\omega_y\,\mathbf{j} + \omega_z\,\mathbf{k}, \text{ where } \omega_z = 8\ \text{rad/s}$$

$$v = 0.8\omega_z = (0.8)(8) = 6.4\ \text{m/s}$$

$$\omega_y = -\frac{6.4}{0.2} = -32\ \text{rad/s}$$

Thus,

$$\omega = -32\mathbf{j} + 8\mathbf{k}$$

$$\dot{\omega} = \dot{\omega}_{xyz} + \Omega \times \omega = \mathbf{0} + (8\mathbf{k}) \times (-32\mathbf{j} + 8\mathbf{k}) = 256\mathbf{i}$$

$$\omega_x = 256\ \text{rad/s}^2$$

$$\Sigma M_x = I_x\,\omega_x - (I_y - I_z)\,\omega_y\,\omega_z$$

$$N_D(0.8) - 25(9.81)(0.8) = (16.25)(256) - (0.5 - 16.25)(-32)(8)$$

$$N_D = 405\ \text{N} \qquad \textbf{Ans.}$$

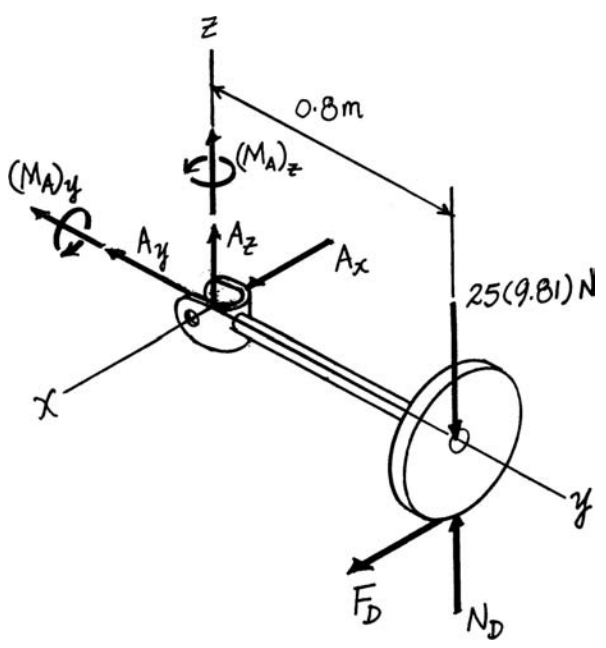

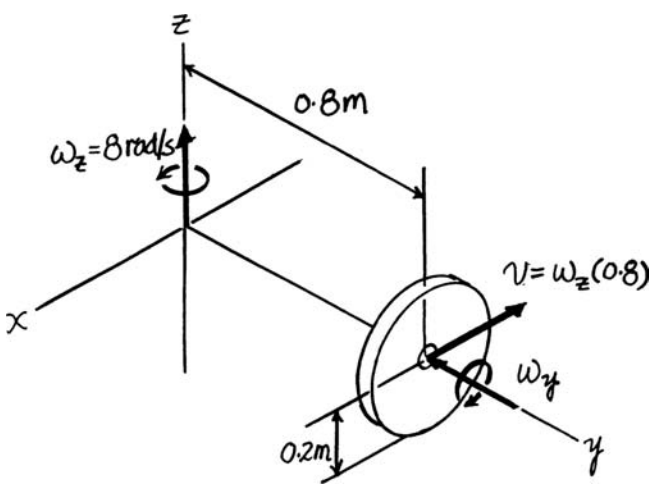

© 2010 Pearson Education, Inc., Upper Saddle River, NJ. All rights reserved. This material is protected under all copyright laws as they currently exist. No portion of this material may be reproduced, in any form or by any means, without permission in writing from the publisher.

•21–57. The 25-lb disk is *fixed* to rod *BCD*, which has negligible mass. Determine the torque **T** which must be applied to the vertical shaft so that the shaft has an angular acceleration of $\alpha = 6\ \text{rad/s}^2$. The shaft is free to turn in its bearings.

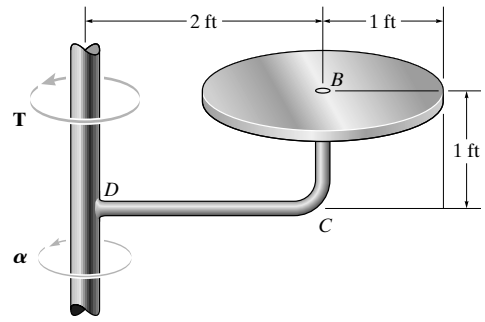

$$I_z = \frac{1}{2}\left(\frac{25}{32.2}\right)(1)^2 + \left(\frac{25}{32.2}\right)(2)^2 = 3.4938\ \text{slug}\cdot\text{ft}^2$$

Applying the third of Eq. 21–25 with $I_x = I_y, \omega_x = \omega_y = 0, \dot{\omega}_z = 6\ \text{rad/s}^2$

$$\Sigma M_z = I_z\,\dot{\omega}_z - (I_x - I_y)\omega_x\,\omega_y\,; \qquad T = 3.4938(6) = 21.0\ \text{lb}\cdot\text{ft} \qquad \textbf{Ans.}$$

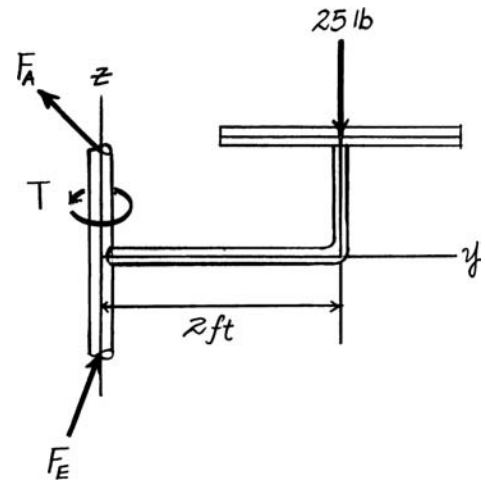

21–58. Solve Prob. 21–57, assuming rod *BCD* has a weight per unit length of 2 lb/ft.

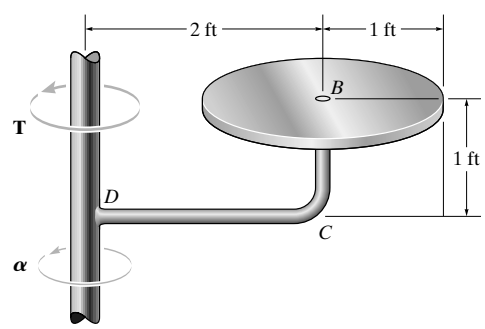

$$I_z = \frac{1}{2}\left(\frac{25}{32.2}\right)(1)^2 + \left(\frac{25}{32.2}\right)(2)^2 + \frac{1}{3}\left(\frac{2(2)}{32.2}\right)(2)^2 + \left(\frac{1(2)}{32.2}\right)(2)^2 = 3.9079\ \text{slug}\cdot\text{ft}^2$$

Applying the third of Eq. 21–25 with $I_x = I_y, \omega_x = \omega_y = 0, \dot{\omega}_z = 6\ \text{rad/s}^2$

$$\Sigma M_z = I_z\,\dot{\omega}_z - (I_x - I_y)\,\omega_x\,\omega_y\,; \qquad T = 3.9079(6) = 23.4\ \text{lb}\cdot\text{ft} \qquad \textbf{Ans.}$$

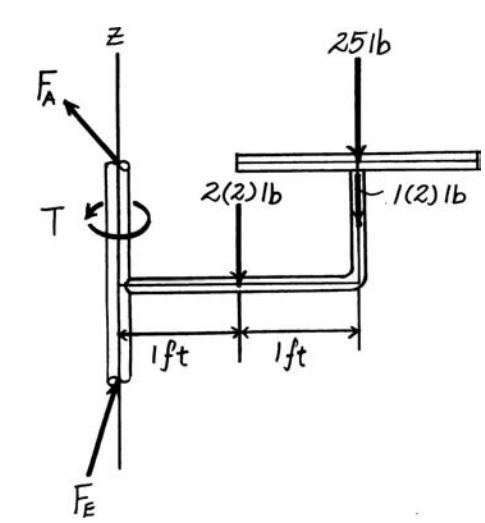

© 2010 Pearson Education, Inc., Upper Saddle River, NJ. All rights reserved. This material is protected under all copyright laws as they currently exist. No portion of this material may be reproduced, in any form or by any means, without permission in writing from the publisher.

21–59. If shaft AB rotates with a constant angular velocity of $\omega = 50$ rad/s, determine the X, Y, Z components of reaction at journal bearing A and thrust bearing B at the instant shown. The thin plate has a mass of 10 kg. Neglect the mass of shaft AB.

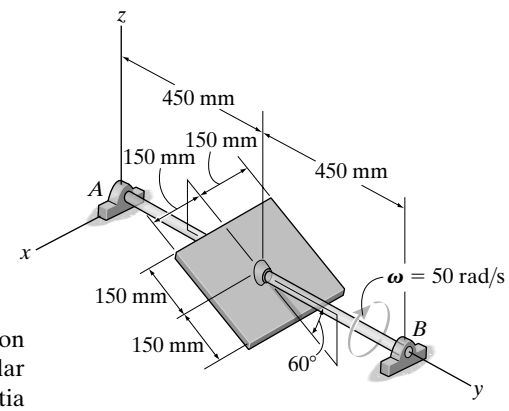

The rotating xyz frame is set with its origin at the plate's mass center as shown on the free-body diagram, Fig. a. This frame will be fixed to the plate so that its angular velocity is $\Omega = \omega$ and the x, y, and z axes will always be the principal axes of inertia of the plate. Referring to Fig. b,

$$\omega = [-50 \sin 60^\circ\, \mathbf{j} + 50 \cos 60^\circ\, \mathbf{k}] \text{ rad/s} = [-43.30\mathbf{j} + 25\mathbf{k}] \text{ rad/s}$$

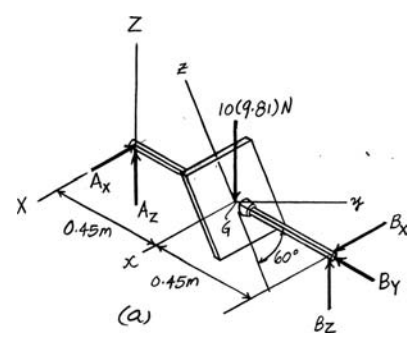

Thus,

$$\omega_x = 0 \qquad \omega_y = -43.30 \text{ rad/s} \qquad \omega_z = 25 \text{ rad/s}$$

Since ω is always directed towards the $-Y$ axis and has a constant magnitude, $\dot{\omega} = 0$. Also, since $\Omega = \omega$, $\dot{\omega}_{xyz} = \dot{\omega} = 0$. Thus,

$$\dot{\omega}_x = \dot{\omega}_y = \dot{\omega}_z = 0$$

The mass moments of inertia of the plate about the x, y, and z axes are

$$I_x = I_z = \frac{1}{12}(10)\left(0.3^2\right) = 0.075 \text{ kg}\cdot\text{m}^2 \qquad I_y = \frac{1}{12}(10)\left(0.3^2 + 0.3^2\right) = 0.15 \text{ kg}\cdot\text{m}^2$$

Applying the equations of motion,

$$\Sigma M_x = I_x\dot{\omega}_x - \left(I_y - I_z\right)\omega_y\omega_z; \quad B_Z(0.45) - A_Z(0.45) = 0 - (0.15 - 0.075)(-43.30)(25)$$

$$B_Z - A_Z = 180.42 \qquad \textbf{(1)}$$

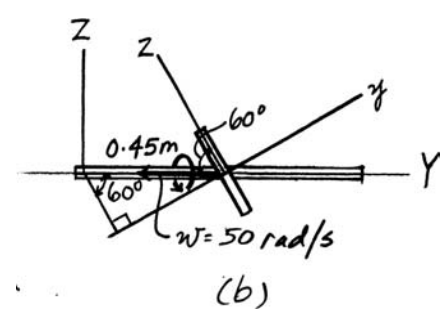

$$\Sigma M_y = I_y\dot{\omega}_y - (I_z - I_x)\omega_z\omega_x; \quad -A_X(0.45 \cos 60^\circ) - B_X(0.45 \cos 60^\circ) = 0 - 0$$

$$A_X = -B_X \qquad \textbf{(2)}$$

$$\Sigma M_z = I_z\dot{\omega}_z - \left(I_x - I_y\right)\omega_x\omega_y; \quad -A_X(0.45 \sin 60^\circ) - B_X(0.45 \sin 60^\circ) = 0 - 0$$

$$A_X = -B_X$$

$$\Sigma F_X = m(a_G)_X; \qquad B_X - A_X = 0 \qquad \textbf{(3)}$$

$$\Sigma F_Y = m(a_G)_Y; \qquad B_Y = 0 \qquad \textbf{Ans.}$$

$$\Sigma F_Z = m(a_G)_Z; \qquad A_Z + B_Z - 10(9.81) = 0 \qquad \textbf{(4)}$$

Solving Eqs. (1) through (4),

$$A_Z = -41.16\text{N} = -41.6 \text{ N} \qquad B_Z = 139.26 \text{ N} = 139 \text{ N} \qquad \textbf{Ans.}$$

$$A_X = B_X = 0 \qquad \textbf{Ans.}$$

The negative sign indicates that $\mathbf{A}_Z$ acts in the opposite sense to that shown on the free-body diagram.

© 2010 Pearson Education, Inc., Upper Saddle River, NJ. All rights reserved. This material is protected under all copyright laws as they currently exist. No portion of this material may be reproduced, in any form or by any means, without permission in writing from the publisher.

***21–60.** A thin uniform plate having a mass of 0.4 kg spins with a constant angular velocity $\boldsymbol{\omega}$ about its diagonal AB. If the person holding the corner of the plate at B releases his finger, the plate will fall downward on its side AC. Determine the necessary couple moment $\mathbf{M}$ which if applied to the plate would prevent this from happening.

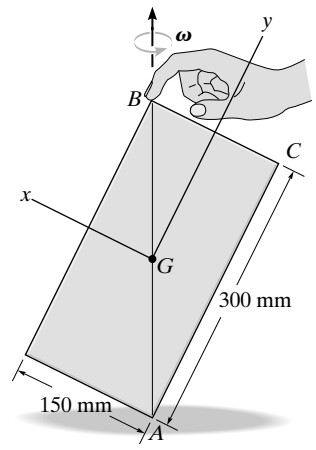

Using the principal axis shown,

$$I_x = \frac{1}{12}(0.4)(0.3)^2 = 3\left(10^{-3}\right)\ \text{kg}\cdot\text{m}^2$$

$$I_y = \frac{1}{12}(0.4)(0.15)^2 = 0.75\left(10^{-3}\right)\ \text{kg}\cdot\text{m}^2$$

$$I_z = \frac{1}{12}(0.4)\left[(0.3)^2 + (0.15)^2\right] = 3.75\left(10^{-3}\right)\ \text{kg}\cdot\text{m}^2$$

$$\theta = \tan^{-1}\left(\frac{75}{150}\right) = 26.57°$$

$$\omega_x = \omega \sin 26.57°, \qquad \dot{\omega}_x = 0$$

$$\omega_y = \omega \cos 26.57°, \qquad \omega_y = 0$$

$$\omega_z = 0, \qquad \dot{\omega}_z = 0$$

$$\Sigma M_x = I_x\,\omega_x - (I_y - I_z)\omega_y\,\omega_z$$

$$M_x = 0$$

$$\Sigma M_y = I_y\,\omega_y - (I_z - I_x)\omega_z\,\omega_z$$

$$M_y = 0$$

$$\Sigma M_z = I_z\,\omega_z - (I_x - I_y)\omega_x\,\omega_y$$

$$M_z = 0 - \left[3\left(10^{-3}\right) - 0.75\left(10^{-3}\right)\right]\omega^2 \sin 26.57° \cos 26.57°$$

$$M_z = -0.9\left(10^{-3}\right)\omega^2\ \text{N}\cdot\text{m} = -0.9\omega^2\ \text{mN}\cdot\text{m} \qquad \textbf{Ans.}$$

The couple acts outward, perpendicular to the face of the plate.

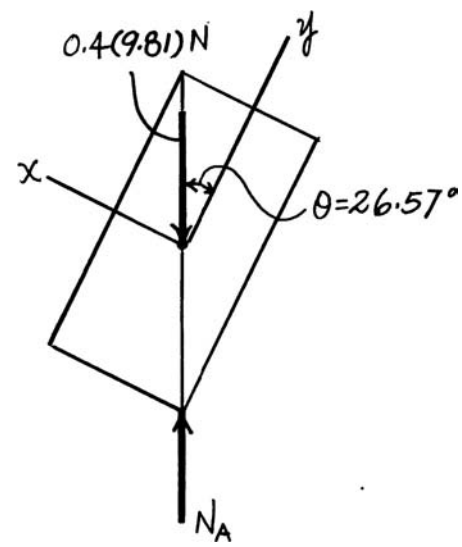

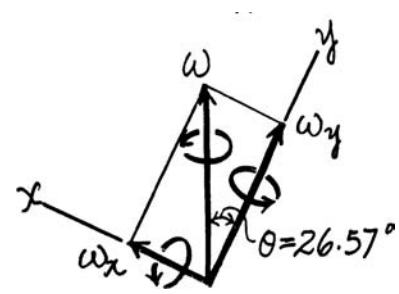

© 2010 Pearson Education, Inc., Upper Saddle River, NJ. All rights reserved. This material is protected under all copyright laws as they currently exist. No portion of this material may be reproduced, in any form or by any means, without permission in writing from the publisher.

21–61. Show that the angular velocity of a body, in terms of Euler angles ϕ, θ, and ψ, can be expressed as $\omega = (\dot{\phi}\sin\theta\sin\psi + \dot{\theta}\cos\psi)\mathbf{i} + (\dot{\phi}\sin\theta\cos\psi - \dot{\theta}\sin\psi)\mathbf{j} + (\dot{\phi}\cos\theta + \dot{\psi})\mathbf{k}$, where $\mathbf{i}$, $\mathbf{j}$, and $\mathbf{k}$ are directed along the x, y, z axes as shown in Fig. 21–15d.

From Fig. 21–15b. due to rotation ϕ, the x, y, z components of $\dot{\phi}$ are simply $\dot{\phi}$ along z axis.

From Fig 21–15c, due to rotation θ, the x, y, z components of $\dot{\phi}$ and $\dot{\theta}$ are $\dot{\phi}\sin\theta$ in the y direction, $\dot{\phi}\cos\theta$ in the z direction, and $\dot{\theta}$ in the x direction.

Lastly, rotation ψ. Fig. 21–15d, produces the final components which yields

$$\omega = \left(\dot{\phi}\sin\theta\sin\psi + \dot{\theta}\cos\psi\right)\mathbf{i} + \left(\dot{\phi}\sin\theta\cos\psi - \dot{\theta}\sin\psi\right)\mathbf{j} + \left(\dot{\phi}\cos\theta + \dot{\psi}\right)\mathbf{k} \quad \textbf{Q.E.D.}$$

21–62. A thin rod is initially coincident with the Z axis when it is given three rotations defined by the Euler angles $\phi = 30°$, $\theta = 45°$, and $\psi = 60°$. If these rotations are given in the order stated, determine the coordinate direction angles α, β, γ of the axis of the rod with respect to the X, Y, and Z axes. Are these directions the same for any order of the rotations? Why?

$\mathbf{u} = (1\sin 45°)\sin 30°\,\mathbf{i} - (1\sin 45°)\cos 30°\mathbf{j} + 1\cos 45°\,\mathbf{k}$

$\mathbf{u} = 0.3536\mathbf{i} - 0.6124\mathbf{j} + 0.7071\mathbf{k}$

$\alpha = \cos^{-1} 0.3536 = 69.3°$ **Ans.**

$\beta = \cos^{-1}(-0.6124) = 128°$ **Ans.**

$\gamma = \cos^{-1}(0.7071) = 45°$ **Ans.**

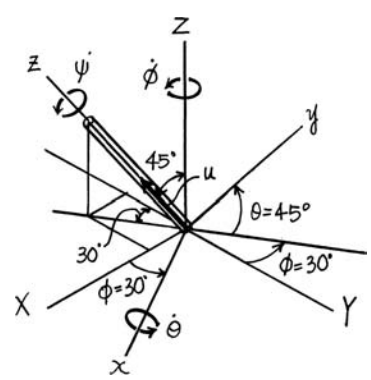

© 2010 Pearson Education, Inc., Upper Saddle River, NJ. All rights reserved. This material is protected under all copyright laws as they currently exist. No portion of this material may be reproduced, in any form or by any means, without permission in writing from the publisher.

21–63. The 30-lb wheel rolls without slipping. If it has a radius of gyration $k_{AB} = 1.2$ ft about its axle AB, and the vertical drive shaft is turning at 8 rad/s, determine the normal reaction the wheel exerts on the ground at C. Neglect the mass of the axle.

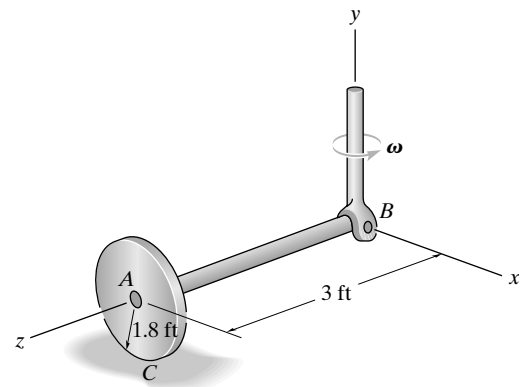

$$\Omega_y = \omega = 8 \text{ rad/s}$$

$$\omega_z = -\frac{3(8)}{1.8} = -13.33 \text{ rad/s}$$

$$\Sigma M_z = I_z \Omega_y \omega_z; \qquad 30(3) - N_w(3) = \left[\left(\frac{30}{32.2}\right)(1.2)^2\right](8)(-13.33)$$

$$N_w = 77.7 \text{ lb} \qquad \textbf{Ans.}$$

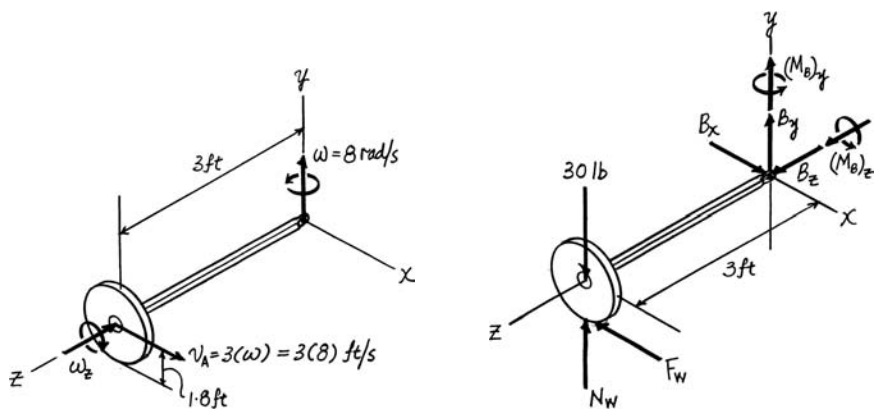

***21–64.** The 30-lb wheel rolls without slipping. If it has a radius of gyration $k_{AB} = 1.2$ ft about its axle AB, determine its angular velocity $\boldsymbol{\omega}$ so that the normal reaction at C becomes 60 lb. Neglect the mass of the axle.

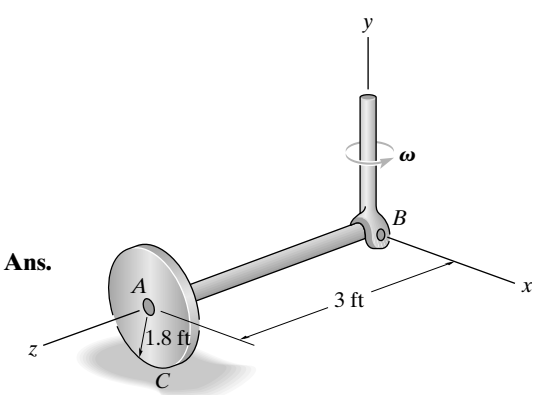

$$\Sigma M_x = I_x \Omega_y \omega_z; \qquad 30(3) - 60(3) = \left[\frac{30}{32.2}(1.2)^2\right]\omega(-1.667\omega)$$

$$\omega = 6.34 \text{ rad/s} \qquad \textbf{Ans.}$$

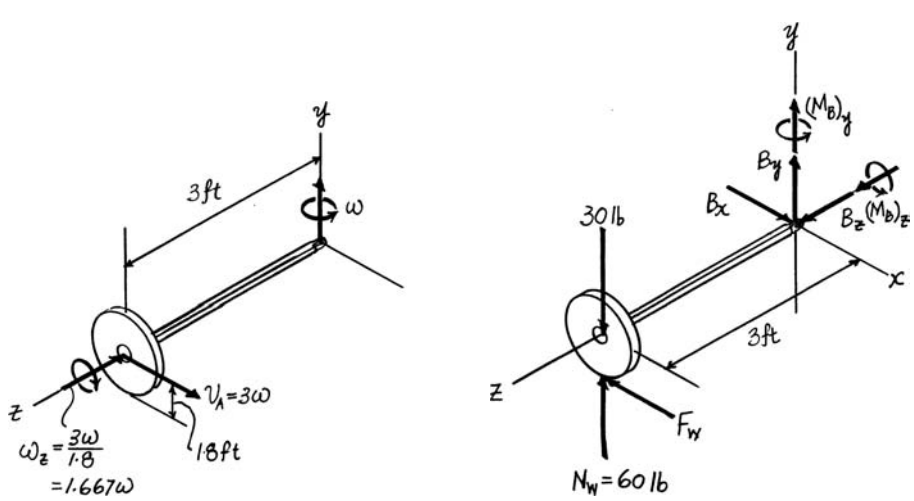

© 2010 Pearson Education, Inc., Upper Saddle River, NJ. All rights reserved. This material is protected under all copyright laws as they currently exist. No portion of this material may be reproduced, in any form or by any means, without permission in writing from the publisher.

•21–65. The motor weighs 50 lb and has a radius of gyration of 0.2 ft about the z axis. The shaft of the motor is supported by bearings at A and B, and spins at a constant rate of $\boldsymbol{\omega}_s = \{100\mathbf{k}\}$ rad/s, while the frame has an angular velocity of $\boldsymbol{\omega}_y = \{2\mathbf{j}\}$ rad/s. Determine the moment which the bearing forces at A and B exert on the shaft due to this motion.

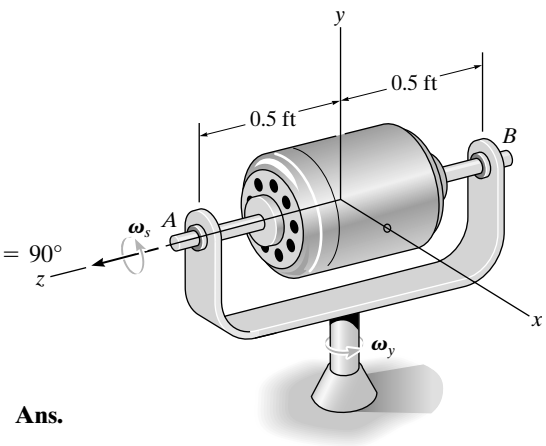

Applying Eq. 21–30: For the coordinate system shown $\theta = 90°$ $\phi = 90°$ $\dot{\theta} = 0$ $\dot{\phi} = 2$ rad/s $\dot{\psi} = 100$ rad/s.

$\Sigma M_x = -I\dot{\phi}^2 \sin\theta\cos\theta + I_z\,\dot{\phi}\sin\theta(\dot{\phi}\cos\theta + \dot{\psi})$ reduces to

$$\Sigma M_x = I_z\dot{\phi}\dot{\psi}; \qquad M_x = \left[\left(\frac{50}{32.2}\right)(0.2)^2\right](2)(100) = 12.4\ \text{lb}\cdot\text{ft}$$ **Ans.**

Since $\omega_x = 0$

$\Sigma M_y = 0; \qquad M_y = 0$ **Ans.**

$\Sigma M_z = 0; \qquad M_z = 0$ **Ans.**

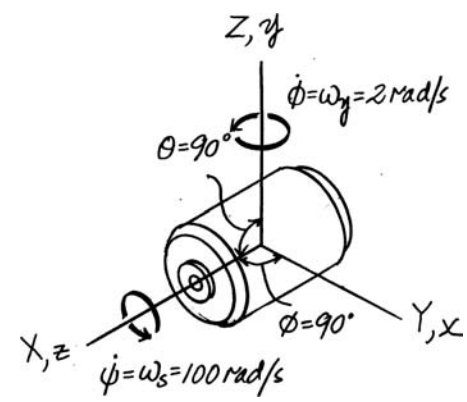

21–66. The car travels at a constant speed of $v_C = 100$ km/h around the horizontal curve having a radius of 80 m. If each wheel has a mass of 16 kg, a radius of gyration $k_G = 300$ mm about its spinning axis, and a radius of 400 mm, determine the difference between the normal forces of the rear wheels, caused by the gyroscopic effect. The distance between the wheels is 1.30 m.

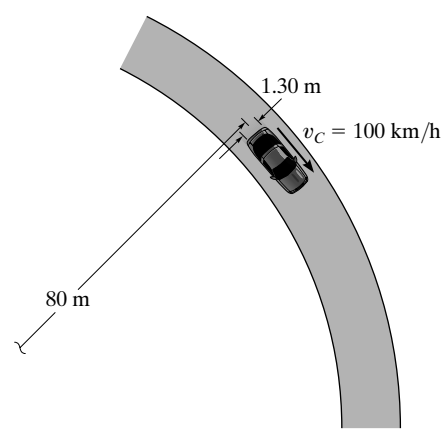

$I = 2[16(0.3)^2] = 2.88\ \text{kg}\cdot\text{m}^2$

$$\omega_s = \frac{100(1000)}{3600(0.4)} = 69.44\ \text{rad/s}$$

$$\omega_p = \frac{100(1000)}{80(3600)} = 0.347\ \text{rad/s}$$

$M = I\,\omega_s\,\omega_p$

$\Delta F(1.30) = 2.88(69.44)(0.347)$

$\Delta F = 53.4$ N **Ans.**

© 2010 Pearson Education, Inc., Upper Saddle River, NJ. All rights reserved. This material is protected under all copyright laws as they currently exist. No portion of this material may be reproduced, in any form or by any means, without permission in writing from the publisher.

21–67. The top has a mass of 90 g, a center of mass at G, and a radius of gyration $k = 18$ mm about its axis of symmetry. About any transverse axis acting through point O the radius of gyration is $k_t = 35$ mm. If the top is connected to a ball-and-socket joint at O and the precession is $\omega_p = 0.5$ rad/s, determine the spin $\boldsymbol{\omega}_s$.

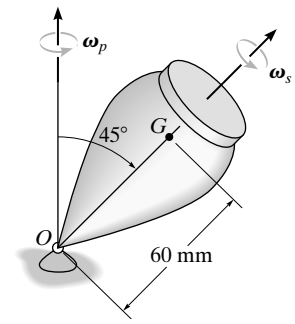

$\omega_p = 0.5$ rad/s

$$\Sigma M_x = -I\dot{\phi}^2 \sin\theta\cos\theta + I_z\dot{\phi}\sin\theta\left(\dot{\phi}\cos\theta + \dot{\psi}\right)$$

$$0.090(9.81)(0.06)\sin 45^\circ = -0.090(0.035)^2(0.5)^2(0.7071)^2 + 0.090(0.018)^2(0.5)(0.7071)\left[0.5(0.7071) + \dot{\psi}\right]$$

$$\omega_s = \dot{\psi} = 3.63\left(10^3\right) \text{ rad/s} \qquad \textbf{Ans.}$$

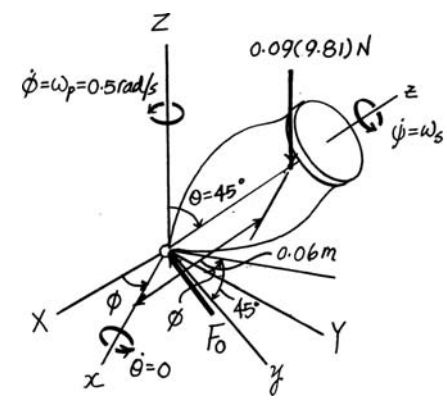

***21–68.** The top has a weight of 3 lb and can be considered as a solid cone. If it is observed to precess about the vertical axis at a constant rate of 5 rad/s, determine its spin.

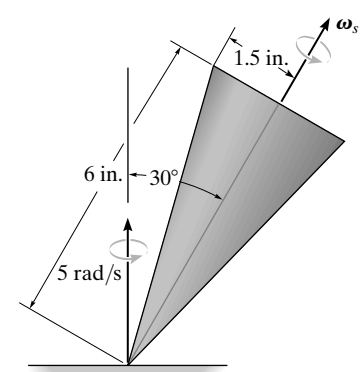

$$I = \frac{3}{80}\left(\frac{3}{32.2}\right)\left[4\left(\frac{1.5}{12}\right)^2 + \left(\frac{6}{12}\right)^2\right] + \frac{3}{32.2}\left(\frac{4.5}{12}\right)^2 = 0.01419 \text{ slug}\cdot\text{ft}^2$$

$$I_z = \frac{3}{10}\left(\frac{3}{32.2}\right)\left(\frac{1.5}{12}\right)^2 = 0.43672\left(10^{-3}\right) \text{ slug}\cdot\text{ft}^2$$

$$\Sigma M_x = -I\phi^2 \sin\theta\cos\theta + I_z\,\dot{\phi}\sin\theta\left(\dot{\phi}\cos\theta + \dot{\psi}\right)$$

$$(3)\left(\frac{4.5}{12}\right)(\sin 30^\circ) - (0.01419)(5)^2\sin 30^\circ\cos 30^\circ + 0.43672\left(10^{-3}\right)(5)\sin 30^\circ\left(5\cos 30^\circ + \dot{\psi}\right)$$

$$\dot{\psi} = 652 \text{ rad/s} \qquad \textbf{Ans.}$$

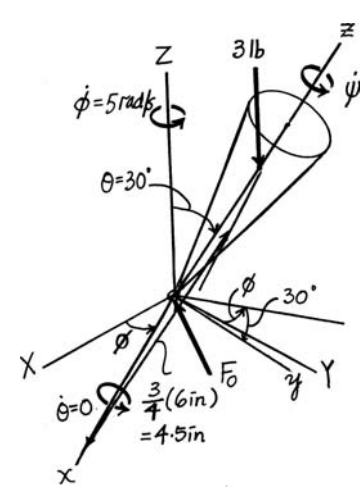

© 2010 Pearson Education, Inc., Upper Saddle River, NJ. All rights reserved. This material is protected under all copyright laws as they currently exist. No portion of this material may be reproduced, in any form or by any means, without permission in writing from the publisher.

•21–69. The empty aluminum beer keg has a mass of m, center of mass at G, and radii of gyration about the x and y axes of $k_x = k_y = \frac{5}{4}r$, and about the z axis of $k_z = \frac{1}{4}r$, respectively. If the keg rolls without slipping with a constant angular velocity, determine its largest value without having the rim A leave the floor.

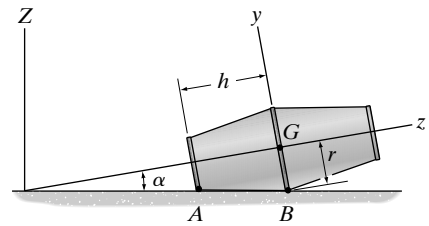

Since the beer keg rolls without slipping, the instantaneous axis of zero velocity is indicated in Fig. a. Thus, $\omega_p = \omega_s \sin\alpha$.

Since $\dot{\psi} = \omega_s$, $\dot{\phi} = -\omega_p = -\omega_s \sin\alpha$, and $\theta = 90° - \alpha$ are constant, the beer keg undergoes steady precession.

$I = I_x = I_y = m\left(\frac{5}{4}r\right)^2 = \frac{25}{16}mr^2$ and $I_z = m\left(\frac{1}{4}r\right)^2 = \frac{1}{16}mr^2$. Referring to the free-body diagram of the beer keg in Fig. b,

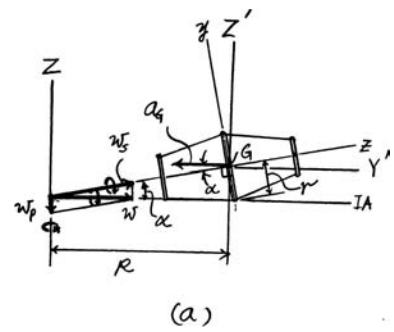

(a)

$$\Sigma M_x = -I\dot{\phi}^2 \sin\theta\cos\theta + I_z\dot{\phi}\sin\theta(\dot{\phi}\cos\theta + \dot{\psi});$$

$$F_B\cos\alpha(r) - N_B\sin\alpha(r) = -\frac{25}{16}mr^2(-\omega_s\sin\alpha)^2\sin(90° - \alpha)\cos(90° - \alpha)$$

$$+\frac{1}{16}mr^2(-\omega_s\sin\alpha)\sin(90°-\alpha)[(-\omega_s\sin\alpha)\cos(90°-\alpha) + \omega_s]$$

$$F_B\cos\alpha - N_B\sin\alpha = \frac{1}{16}mr\,\omega_s^2\sin\alpha\cos\alpha\left(26\sin^2\alpha - 1\right) \qquad \textbf{(1)}$$

Since the mass center G of the beer keg rotates about the Z axis, Fig. a, its acceleration can be found from $a_G = \omega_p^2 R = (-\omega_s\sin\alpha)^2\left(\frac{r\cos^2\alpha}{\sin\alpha}\right) = \omega_s^2 r\sin\alpha\cos^2\alpha$ and it is directed towards the negative Y' axis. Fig. a. Since the mass center does not move along the Z', $(a_G)_{Z'} = 0$. Thus,

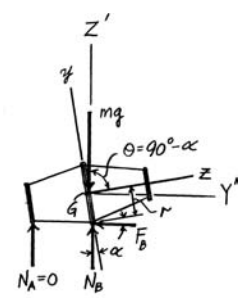

(b)

$$\Sigma F_{Y'} = m(a_G)_{Y'}; \qquad -F_B = -m\left(\omega_s^2 r\sin\alpha\cos^2\alpha\right)$$

$$F_B = m\omega_s^2 r\sin\alpha\cos^2\alpha$$

$$\Sigma F_{Z'} = m(a_G)_{Z'}; \qquad N_B - mg = 0 \qquad N_B = mg$$

Substituting these results into Eq. (1),

$$\omega_S = \sqrt{\frac{16g}{r\cos\alpha\left(16\cos^2\alpha - 26\sin^2\alpha + 1\right)}} \qquad \textbf{Ans.}$$

© 2010 Pearson Education, Inc., Upper Saddle River, NJ. All rights reserved. This material is protected under all copyright laws as they currently exist. No portion of this material may be reproduced, in any form or by any means, without permission in writing from the publisher.

21–70. The 10-kg cone spins at a constant rate of $\omega_s = 150$ rad/s. Determine the constant rate ω_p at which it precesses if $\phi = 90°$.

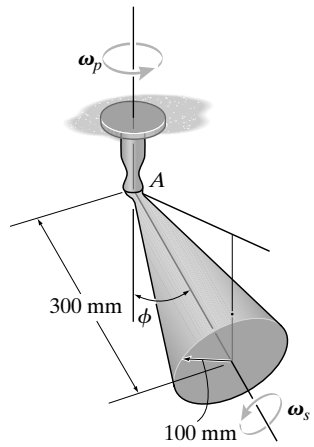

Here, $\theta = 180° - 90° = 90°$, $\dot{\psi} = \omega_s = -150$ rad/s, and $\dot{\phi} = \omega_p$ are constants. Thus, this is a special case of steady precession. $I_z = \frac{3}{10}(10)(0.1^2) = 0.03\ \text{kg}\cdot\text{m}^2$, $\Omega_y = -\dot{\phi} = -\omega_p$, and $\omega_z = \dot{\psi} = -150$ rad/s. Thus,

$$\Sigma M_x = I_z \Omega_y \omega_z; \qquad -10(9.81)(0.225) = 0.03(-\omega_p)(-150)$$

$$\omega_p = -4.905 \text{ rad/s} \qquad \textbf{Ans.}$$

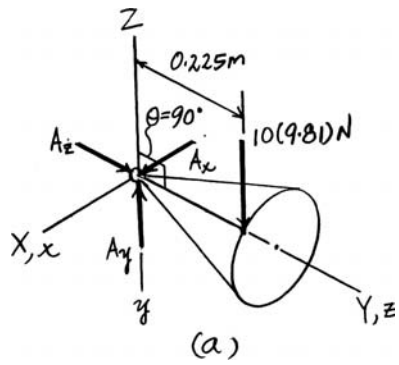

21–71. The 10-kg cone is spinning at a constant rate of $\omega_s = 150$ rad/s. Determine the constant rate ω_p at which it precesses if $\phi = 30°$.

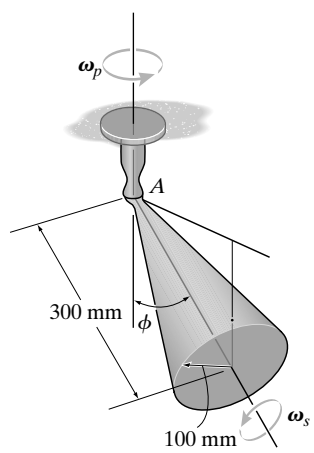

Since $\dot{\psi} = \omega_s = -150$ rad/s, $\dot{\phi} = \omega_p$, and $\theta = 180° - 30° = 150°$ are constants, the cone undergoes steady precession. $I_z = \frac{3}{10}(10)(0.2^2) = 0.03\ \text{kg}\cdot\text{m}^2$ and $I = I_x = I_y = \frac{3}{80}(10)\left[4(0.1^2) + 0.3^2\right] + 10(0.225^2) = 0.555\ \text{kg}\cdot\text{m}^2$.

Thus,

$$\Sigma M_x = -I\dot{\phi}^2 \sin\theta\cos\theta + I_z\dot{\phi}\sin\theta(\dot{\phi}\cos\theta + \dot{\psi})$$

$$-10(9.81)\sin 30°(0.225) = -0.555\omega_p^2 \sin 150° \cos 150° + 0.03\omega_p \sin 150°\left[\omega_p \cos 150° + (-150)\right]$$

$$0.2273\omega_p^2 - 2.25\omega_p + 11.036 = 0$$

Solving,

$$\omega_p = 13.5 \text{ rad/s or } 3.60 \text{ rad/s} \qquad \textbf{Ans.}$$

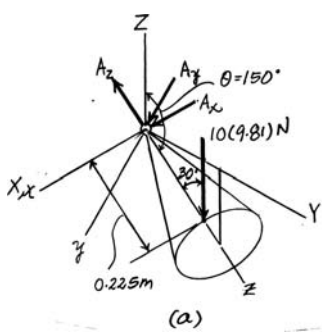

© 2010 Pearson Education, Inc., Upper Saddle River, NJ. All rights reserved. This material is protected under all copyright laws as they currently exist. No portion of this material may be reproduced, in any form or by any means, without permission in writing from the publisher.

***21–72.** The 1-lb top has a center of gravity at point G. If it spins about its axis of symmetry and precesses about the vertical axis at constant rates of $\omega_s = 60$ rad/s and $\omega_p = 10$ rad/s, respectively, determine the steady state angle θ. The radius of gyration of the top about the z axis is $k_z = 1$ in., and about the x and y axes it is $k_x = k_y = 4$ in.

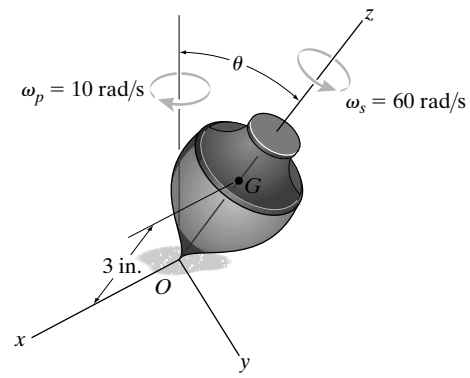

Since $\dot{\psi} = \omega_s = 60$ rad/s and $\dot{\phi} = \omega_p = -10$ rad/s and θ are constant, the top undergoes steady precession.

$$I_z = \left(\frac{1}{32.2}\right)\left(\frac{1}{12}\right)^2 = 215.67\left(10^{-6}\right)\ \text{slug}\cdot\text{ft}^2 \quad \text{and} \quad I = I_x = I_y = \left(\frac{1}{32.2}\right)\left(\frac{4}{12}\right)^2$$

$$= 3.4507\left(10^{-3}\right)\ \text{slug}\cdot\text{ft}^2.$$

Thus,

$$\Sigma M_x = -I\dot{\phi}^2 \sin\theta\cos\theta + I_z\dot{\phi}\sin\theta\left(\dot{\phi}\cos + \dot{\psi}\right)$$

$$-1\sin\theta(0.25) = -3.4507\left(10^{-3}\right)(-10)^2\sin\theta\cos\theta + 215.67\left(10^{-6}\right)(-10)\sin\theta[(-10)\cos\theta + 60]$$

$$\theta = 68.1^\circ \qquad \textbf{Ans.}$$

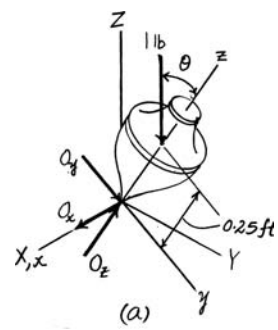

•21–73. At the moment of take off, the landing gear of an airplane is retracted with a constant angular velocity of $\omega_p = 2$ rad/s, while the wheel continues to spin. If the plane takes off with a speed of $v = 320$ km/h, determine the torque at A due to the gyroscopic effect. The wheel has a mass of 50 kg, and the radius of gyration about its spinning axis is $k = 300$ mm.

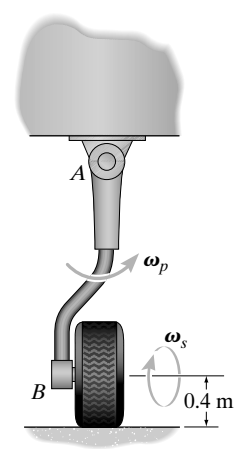

When the plane travels with a speed of $v = \left(320\,\frac{\text{km}}{\text{h}}\right)\left(\frac{1000\text{ m}}{1\text{ km}}\right)\left(\frac{1\text{ h}}{3600\text{ s}}\right) = 88.89$ m/s, its wheel spins with a constant angular velocity of $\omega_s = \frac{v}{r} = \frac{88.89}{0.4} = 222.22$ rad/s. Here, $\theta = 90^\circ$, $\Omega_y = \omega_p = 2$ rad/s and $\omega_z = \omega_s = 222.22$ rad/s are constants. This is a special case of steady precession.

$I_z = 50\left(0.3^2\right) = 4.5\ \text{kg}\cdot\text{m}^2$. Thus,

$$\Sigma M_x = I_z\Omega_y\omega_z; \qquad M_x = 4.5(2)(222.22) = 2000\ \text{N}\cdot\text{m} = 2\text{kN}\cdot\text{m} \qquad \textbf{Ans.}$$

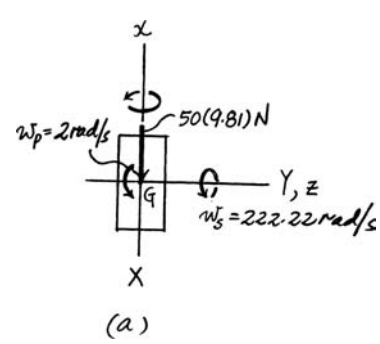

© 2010 Pearson Education, Inc., Upper Saddle River, NJ. All rights reserved. This material is protected under all copyright laws as they currently exist. No portion of this material may be reproduced, in any form or by any means, without permission in writing from the publisher.

21–74. The projectile shown is subjected to torque-free motion. The transverse and axial moments of inertia are I and I_z, respectively. If θ represents the angle between the precessional axis Z and the axis of symmetry z, and β is the angle between the angular velocity $\boldsymbol{\omega}$ and the z axis, show that β and θ are related by the equation $\tan\theta = (I/I_z)\tan\beta$.

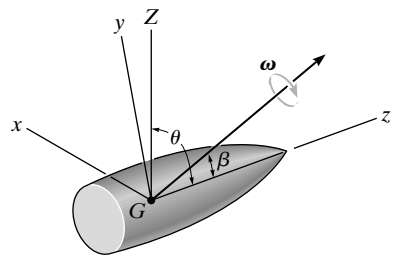

From Eq. 21–34 $\omega_y = \dfrac{H_G \sin\theta}{I}$ and $\omega_z = \dfrac{H_G \cos\theta}{I_z}$ Hence $\dfrac{\omega_y}{\omega_z} = \dfrac{I_z}{I}\tan\theta$

However, $\omega_y = \omega\sin\beta$ and $\omega_z = \omega\cos\beta$

$$\frac{\omega_y}{\omega_z} = \tan\beta = \frac{I_z}{I}\tan\theta$$

$$\tan\theta = \frac{I}{I_z}\tan\beta \qquad \textbf{Q.E.D.}$$

21–75. The space capsule has a mass of 3.2 Mg, and about axes passing through the mass center G the axial and transverse radii of gyration are $k_z = 0.90$ m and $k_t = 1.85$ m, respectively. If it spins at $\omega_s = 0.8$ rev/s, determine its angular momentum. Precession occurs about the Z axis.

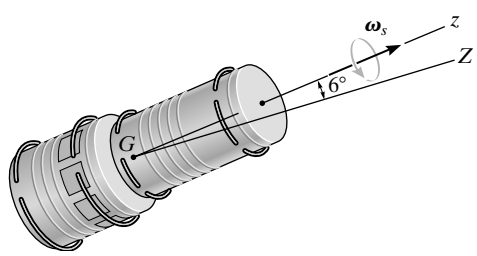

Gyroscopic Motion: Here, the spinning angular velocity $\psi = \omega_s = 0.8(2\pi) = 1.6\pi$ rad/s. The moment of inertia of the satelite about the z axis is $I_z = 3200\left(0.9^2\right) = 2592\ \text{kg}\cdot\text{m}^2$ and the moment of inertia of the satelite about its transverse axis is $I = 3200\left(1.85^2\right) = 10\,952\ \text{kg}\cdot\text{m}^2$. Applying the third of Eq. 21–36 with $\theta = 6°$, we have

$$\dot{\psi} = \frac{I - I_z}{II_z}H_G\cos\theta$$

$$1.6\pi\left[\frac{10\,952 - 2592}{10\,952(2592)}\right]H_G\cos 6°$$

$$H_G = 17.16\left(10^3\right)\ \text{kg}\cdot\text{m}^2/\text{s} = 17.2\ \text{Mg}\cdot\text{m}^2/\text{s} \qquad \textbf{Ans.}$$

© 2010 Pearson Education, Inc., Upper Saddle River, NJ. All rights reserved. This material is protected under all copyright laws as they currently exist. No portion of this material may be reproduced, in any form or by any means, without permission in writing from the publisher.

***21–76.** The radius of gyration about an axis passing through the axis of symmetry of the 2.5-Mg satellite is $k_z = 2.3$ m, and about any transverse axis passing through the center of mass G, $k_t = 3.4$ m. If the satellite has a steady-state precession of two revolutions per hour about the Z axis, determine the rate of spin about the z axis.

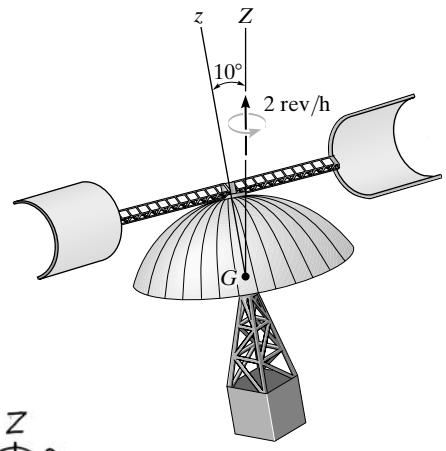

$$I_z = 2500(2.3)^2 = 13\,225 \text{ kg}\cdot\text{m}^2$$

$$I = 2500(3.4)^2 = 28\,900 \text{ kg}\cdot\text{m}^2$$

Use the result of Prob. 21–74.

$$\tan\theta = \left(\frac{I}{I_z}\right)\tan\beta$$

$$\tan 10^\circ = \left(\frac{28\,900}{13\,225}\right)\tan\beta$$

$$\beta = 4.613^\circ$$

From the law of sines,

$$\frac{\sin 5.387^\circ}{\dot{\psi}} = \frac{\sin 4.613^\circ}{2}$$

$$\dot{\psi} = 2.33 \text{ rev/h} \qquad \textbf{Ans.}$$

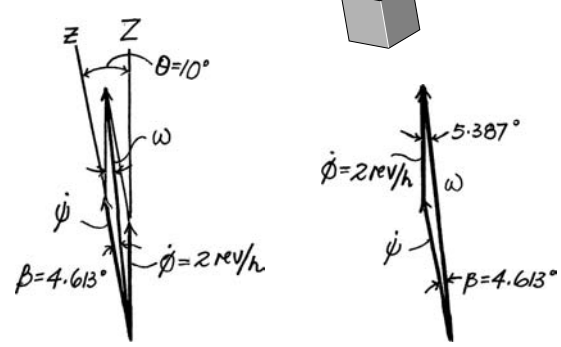

•21–77. The 4-kg disk is thrown with a spin $\omega_z = 6$ rad/s. If the angle θ is measured as 160°, determine the precession about the Z axis.

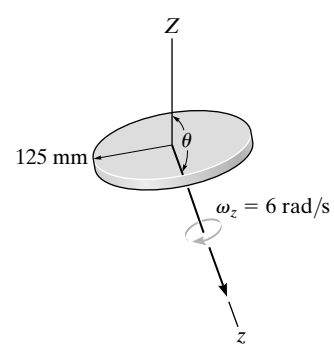

$$I = \tfrac{1}{4}(4)(0.125)^2 = 0.015625 \text{ kg}\cdot\text{m}^2 \qquad I_z = \tfrac{1}{2}(4)(0.125)^2 = 0.03125 \text{ kg}\cdot\text{m}^2$$

Applying Eq. 21–36 with $\theta = 160^\circ$ and $\dot{\psi} = 6$ rad/s

$$\dot{\psi} = \frac{I - I_z}{II_z}H_O\cos\theta$$

$$6 = \frac{0.015625 - 0.03125}{0.015625(0.03125)}H_O\cos 160^\circ$$

$$H_G = 0.1995 \text{ kg}\cdot\text{m}^2/\text{s}$$

$$\phi = \frac{H_G}{I} = \frac{0.1995}{0.015625} = 12.8 \text{ rad/s} \qquad \textbf{Ans.}$$

Note that this is a case of retrograde precession since $I_z > I$.

© 2010 Pearson Education, Inc., Upper Saddle River, NJ. All rights reserved. This material is protected under all copyright laws as they currently exist. No portion of this material may be reproduced, in any form or by any means, without permission in writing from the publisher.

21–78. The projectile precesses about the Z axis at a constant rate of $\dot{\phi} = 15$ rad/s when it leaves the barrel of a gun. Determine its spin $\dot{\psi}$ and the magnitude of its angular momentum $\mathbf{H}_G$. The projectile has a mass of 1.5 kg and radii of gyration about its axis of symmetry (z axis) and about its transverse axes (x and y axes) of $k_z = 65$ mm and $k_x = k_y = 125$ mm, respectively.

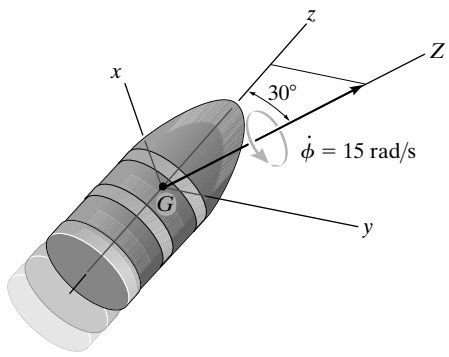

Since the only force that acts on the projectile is its own weight, the projectile undergoes torque-free motion. $I_z = 1.5(0.065^2) = 6.3375(10^{-3})$ kg · m², $I = I_x = I_y = 1.5(0.125^2) = 0.0234375$ kg · m², and $\theta = 30°$. Thus,

$$\dot{\phi} = \frac{H_G}{I}; \quad H_G = I\dot{\phi} = 0.0234375(15) = 0.352 \text{ kg}\cdot\text{m}^2/\text{s} \qquad \textbf{Ans.}$$

$$\dot{\psi} = \frac{I - I_z}{I_z}\dot{\phi}\cos\theta$$

$$= \frac{0.0234375 - 6.3375(10^{-3})}{6.3375(10^{-3})}(15)\cos 30°$$

$$= 35.1 \text{ rad/s} \qquad \textbf{Ans.}$$

21–79. The satellite has a mass of 100 kg and radii of gyration about its axis of symmetry (z axis) and its transverse axes (x or y axis) of $k_z = 300$ mm and $k_x = k_y = 900$ mm, respectively. If the satellite spins about the z axis at a constant rate of $\dot{\psi} = 200$ rad/s, and precesses about the Z axis, determine the precession $\dot{\phi}$ and the magnitude of its angular momentum $\mathbf{H}_G$.

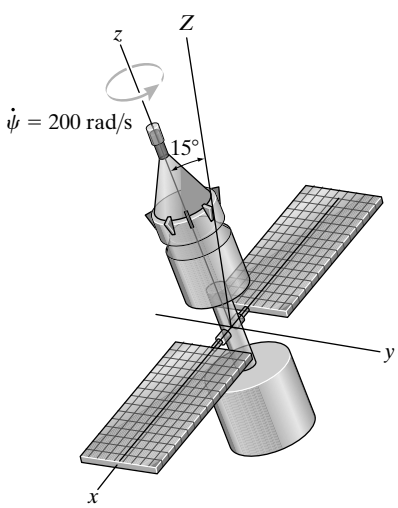

Since the weight is the only force acting on the satellite, it undergoes torque-free motion.

Here, $I_z = 100(0.3^2) = 9$ kg · m², $I = I_x = I_y = 100(0.9^2) = 81$ kg · m², and $\theta = 15°$. Then,

$$\dot{\psi} = \frac{I - I_z}{I_z}\dot{\phi}\cos\theta$$

$$200 = \left(\frac{81 - 9}{9}\right)\dot{\phi}\cos 15°$$

$$\dot{\phi} = 25.88 \text{ rad/s}$$

Using this result,

$$\dot{\phi} = \frac{H_G}{I}$$

$$25.88 = \frac{H_G}{81}$$

$$H_G = 2096 \text{ kg}\cdot\text{m}^2/\text{s} = 2.10 \text{ Mg}\cdot\text{m}^2/\text{s} \qquad \textbf{Ans.}$$

© 2010 Pearson Education, Inc., Upper Saddle River, NJ. All rights reserved. This material is protected under all copyright laws as they currently exist. No portion of this material may be reproduced, in any form or by any means, without permission in writing from the publisher.

***21–80.** The football has a mass of 450 g and radii of gyration about its axis of symmetry (z axis) and its transverse axes (x or y axis) of $k_z = 30$ mm and $k_x = k_y = 50$ mm, respectively. If the football has an angular momentum of $H_G = 0.02\ \text{kg}\cdot\text{m}^2/\text{s}$, determine its precession $\dot{\phi}$ and spin $\dot{\psi}$. Also, find the angle β that the angular velocity vector makes with the z axis.

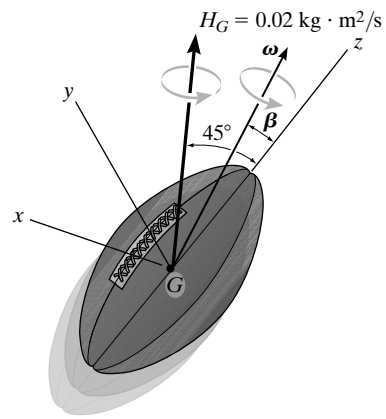

Since the weight is the only force acting on the football, it undergoes torque-free motion. $I_z = 0.45(0.03^2) = 0.405(10^{-3})\ \text{kg}\cdot\text{m}^2$, $I = I_x = I_y = 0.45(0.05^2) = 1.125(10^{-3})\ \text{kg}\cdot\text{m}^2$, and $\theta = 45°$.

Thus,

$$\dot{\phi} = \frac{H_G}{I} = \frac{0.02}{1.125(10^{-3})} = 17.78\ \text{rad/s} = 17.8\ \text{rad/s} \qquad \textbf{Ans.}$$

$$\dot{\psi} = \frac{I - I_z}{II_z} H_G \cos\theta = \frac{1.125(10^{-3}) - 0.405(10^{-3})}{1.125(10^{-3})(0.405)(10^{-3})}(0.02)\cos 45°$$

$$= 22.35\ \text{rad/s} = 22.3\ \text{rad/s} \qquad \textbf{Ans.}$$

Also,

$$\omega_y = \frac{H_G \sin\theta}{I} = \frac{0.02 \sin 45°}{1.125(10^{-3})} = 12.57\ \text{rad/s}$$

$$\omega_z = \frac{H_G \cos\theta}{I_z} = \frac{0.02 \cos 45°}{0.405(10^{-3})} = 34.92\ \text{rad/s}$$

Thus,

$$\beta = \tan^{-1}\left(\frac{\omega_y}{\omega_z}\right) = \tan^{-1}\left(\frac{12.57}{34.92}\right) = 19.8° \qquad \textbf{Ans.}$$

© 2010 Pearson Education, Inc., Upper Saddle River, NJ. All rights reserved. This material is protected under all copyright laws as they currently exist. No portion of this material may be reproduced, in any form or by any means, without permission in writing from the publisher.

•21–81. The space capsule has a mass of 2 Mg, center of mass at G, and radii of gyration about its axis of symmetry (z axis) and its transverse axes (x or y axis) of $k_z = 2.75$ m and $k_x = k_y = 5.5$ m, respectively. If the capsule has the angular velocity shown, determine its precession $\dot{\phi}$ and spin $\dot{\psi}$. Indicate whether the precession is regular or retrograde. Also, draw the space cone and body cone for the motion.

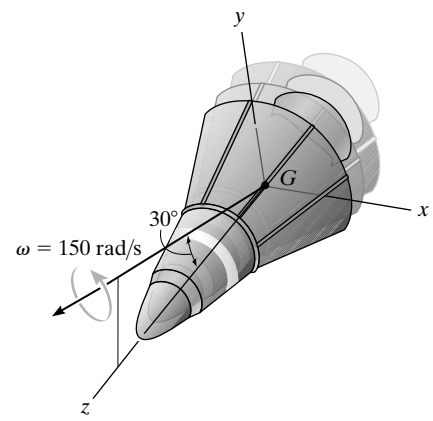

The only force acting on the space capsule is its own weight. Thus, it undergoes torque-free motion. $I_z = 2000(2.75^2) = 15\,125\ \text{kg}\cdot\text{m}^2$, $I = I_x = I_y = 2000(5.5^2) = 60\,500\ \text{kg}\cdot\text{m}^2$. Thus,

$$\omega_y = \frac{H_G \sin\theta}{I}$$

$$150 \sin 30^\circ = \frac{H_G \sin\theta}{60\,500}$$

$$H_G \sin\theta = 4\,537\,500 \qquad \textbf{(1)}$$

$$\omega_z = \frac{H_G \cos\theta}{I_z}$$

$$150 \cos 30^\circ = \frac{H_G \cos\theta}{15\,125}$$

$$H_G \cos\theta = 1\,964\,795.13 \qquad \textbf{(2)}$$

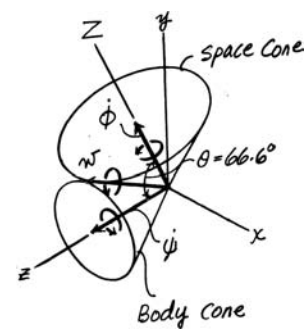

Solving Eqs. (1) and (2),

$$H_G = 4.9446(10^6)\ \text{kg}\cdot\text{m}^2/\text{s} \qquad \theta = 66.59^\circ$$

Using these results,

$$\dot{\phi} = \frac{H_G}{I} = \frac{H_G}{60\,500} = \frac{4.9446(10^6)}{60\,500} = 81.7\ \text{rad/s} \qquad \textbf{Ans.}$$

$$\dot{\psi} = \frac{I - I_z}{I I_z} H_G \cos\theta = \left[\frac{60\,500 - 15\,125}{60\,500(15125)}\right] 4.9446(10^6) \cos 30^\circ$$

$$= 212\ \text{rad/s} \qquad \textbf{Ans.}$$

Since $I > I_z$, the motion is *regular precession*. **Ans.**

© 2010 Pearson Education, Inc., Upper Saddle River, NJ. All rights reserved. This material is protected under all copyright laws as they currently exist. No portion of this material may be reproduced, in any form or by any means, without permission in writing from the publisher.

•22–1. A spring is stretched 175 mm by an 8-kg block. If the block is displaced 100 mm downward from its equilibrium position and given a downward velocity of 1.50 m/s, determine the differential equation which describes the motion. Assume that positive displacement is downward. Also, determine the position of the block when $t = 0.22$ s.

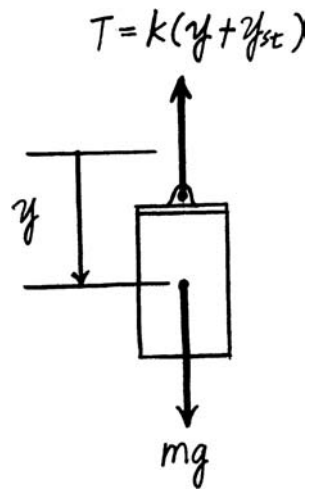

$+\downarrow \Sigma F_y = ma_y; \qquad mg - k(y + y_{st}) = m\ddot{y} \qquad$ where $ky_{st} = mg$

$$\ddot{y} + \frac{k}{m}y = 0$$

Hence $p = \sqrt{\dfrac{k}{m}} \qquad$ Where $k = \dfrac{8(9.81)}{0.175} = 448.46$ N/m

$$= \sqrt{\frac{448.46}{8}} = 7.487$$

$$\therefore \qquad \ddot{y} + (7.487)^2 y = 0 \qquad \ddot{y} + 56.1y = 0 \qquad \textbf{Ans.}$$

The solution of the above differential equation is of the form:

$$y = A \sin pt + B \cos pt \qquad \textbf{(1)}$$

$$v = \dot{y} = Ap \cos pt - Bp \sin pt \qquad \textbf{(2)}$$

At $t = 0$, $y = 0.1$ m and $v = v_0 = 1.50$ m/s

From Eq. (1) $0.1 = A \sin 0 + B \cos 0 \qquad B = 0.1$ m

From Eq. (2) $v_0 = Ap \cos 0 - 0 \qquad A - \dfrac{v_0}{p} = \dfrac{1.50}{7.487} = 0.2003$ m

Hence $\qquad y = 0.2003 \sin 7.487t + 0.1 \cos 7.487t$

At $t = 0.22$ s, $\quad y = 0.2003 \sin\left[7.487(0.22)\right] + 0.1 \cos\left[7.487(0.22)\right]$

$$= 0.192 \text{ m} \qquad \textbf{Ans.}$$

22–2. When a 2-kg block is suspended from a spring, the spring is stretched a distance of 40 mm. Determine the frequency and the period of vibration for a 0.5-kg block attached to the same spring.

$$k = \frac{F}{y} = \frac{2(9.81)}{0.040} = 490.5 \text{ N/m}$$

$$p = \sqrt{\frac{k}{m}} = \sqrt{\frac{490.5}{0.5}} = 31.321$$

$$f = \frac{p}{2\pi} = \frac{31.321}{2\pi} = 4.985 \text{ Hz} \qquad \textbf{Ans.}$$

$$\tau = \frac{1}{f} = \frac{1}{4.985} = 0.201 \text{ s} \qquad \textbf{Ans.}$$

© 2010 Pearson Education, Inc., Upper Saddle River, NJ. All rights reserved. This material is protected under all copyright laws as they currently exist. No portion of this material may be reproduced, in any form or by any means, without permission in writing from the publisher.

22–3. A block having a weight of 8 lb is suspended from a spring having a stiffness $k = 40$ lb/ft. If the block is pushed $y = 0.2$ ft upward from its equilibrium position and then released from rest, determine the equation which describes the motion. What are the amplitude and the natural frequency of the vibration? Assume that positive displacement is downward.

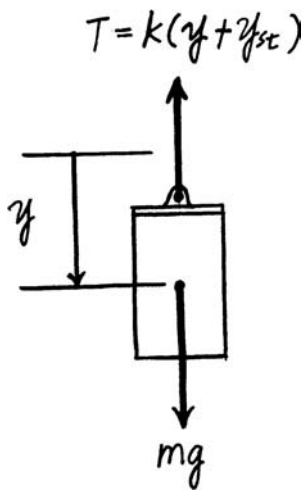

$+\downarrow \Sigma F_y = ma_y;\qquad mg - k(y + y_{st}) = m\ddot{y}\qquad$ where $ky_{st} = mg$

$$\ddot{y} + \frac{k}{m}y = 0$$

Hence $$p = \sqrt{\frac{k}{m}} = \sqrt{\frac{40}{8/32.2}} = 12.689$$

$$f = \frac{p}{2\pi} = \frac{12.689}{2\pi} = 2.02 \text{ Hz}$$ **Ans.**

The solution of the above differential equation is of the form:

$$v = A \sin pt + B \cos pt \qquad \textbf{(1)}$$

$$v = \dot{y} = Ap \cos pt - Bp \sin pt \qquad \textbf{(2)}$$

At $t = 0$, $y = -0.2$ ft and $v = v_0 = 0$

From Eq. (1) $-0.2 = A \sin 0° + B \cos 0°\qquad B = -0.2$ ft

From Eq. (2) $\quad v_0 = Ap \cos 0° - 0\qquad A = \dfrac{v_0}{p} = \dfrac{0}{12.689} = 0$

Hence $\quad y = -0.2 \cos 12.7t$ **Ans.**

Amplitude $\quad C = 0.2$ ft **Ans.**

***22–4.** A spring has a stiffness of 800 N/m. If a 2-kg block is attached to the spring, pushed 50 mm above its equilibrium position, and released from rest, determine the equation that describes the block's motion. Assume that positive displacement is downward.

$$p = \sqrt{\frac{k}{m}} = \sqrt{\frac{800}{2}} = 20$$

$$y = A \sin pt + B \cos pt$$

$$y = -0.05 \text{ m when } t = 0,$$

$$-0.05 = 0 + B;\qquad B = -0.05$$

$$v = Ap \cos pt - Bp \sin pt$$

$$v = 0 \text{ when } t = 0,$$

$$0 = A(20) - 0;\qquad A = 0$$

Thus,

$$y = -0.05 \cos (20t)$$ **Ans.**

© 2010 Pearson Education, Inc., Upper Saddle River, NJ. All rights reserved. This material is protected under all copyright laws as they currently exist. No portion of this material may be reproduced, in any form or by any means, without permission in writing from the publisher.

•22–5. A 2-kg block is suspended from a spring having a stiffness of 800 N/m. If the block is given an upward velocity of 2 m/s when it is displaced downward a distance of 150 mm from its equilibrium position, determine the equation which describes the motion. What is the amplitude of the motion? Assume that positive displacement is downward.

$$p = \sqrt{\frac{k}{m}} = \sqrt{\frac{800}{2}} = 20$$

$$x = A \sin pt + B \cos pt$$

$$x = 0.150 \text{ m when } t = 0,$$

$$0.150 = 0 + B; \qquad B = 0.150$$

$$v = Ap \cos pt - Bp \sin pt$$

$$v = -2 \text{ m/s when } t = 0,$$

$$-2 = A(20) - 0; \qquad A = -0.1$$

Thus,

$$x = 0.1 \sin (20t) + 0.150 \cos (20t) \qquad \textbf{Ans.}$$

$$C = \sqrt{A^2 + B^2} = \sqrt{(0.1)^2 + (0.150)^2} = 0.180 \text{ m} \qquad \textbf{Ans.}$$

22–6. A spring is stretched 200 mm by a 15-kg block. If the block is displaced 100 mm downward from its equilibrium position and given a downward velocity of 0.75 m/s, determine the equation which describes the motion. What is the phase angle? Assume that positive displacement is downward.

$$k = \frac{F}{y} = \frac{15(9.81)}{0.2} = 735.75 \text{ N/m}$$

$$p = \sqrt{\frac{k}{m}} = \sqrt{\frac{735.75}{15}} = 7.00$$

$$y = A \sin pt + B \cos pt$$

$$y = 0.1 \text{ m when } t = 0,$$

$$0.1 = 0 + B; \qquad B = 0.1$$

$$v = Ap \cos pt - Bp \sin pt$$

$$v = 0.75 \text{ m/s when } t = 0,$$

$$0.75 = A(7.00)$$

$$A = 0.107$$

$$y = 0.107 \sin (7.00t) + 0.100 \cos (7.00t) \qquad \textbf{Ans.}$$

$$\phi = \tan^{-1}\left(\frac{B}{A}\right) = \tan^{-1}\left(\frac{0.100}{0.107}\right) = 43.0° \qquad \textbf{Ans.}$$

© 2010 Pearson Education, Inc., Upper Saddle River, NJ. All rights reserved. This material is protected under all copyright laws as they currently exist. No portion of this material may be reproduced, in any form or by any means, without permission in writing from the publisher.

22–7. A 6-kg block is suspended from a spring having a stiffness of $k = 200$ N/m. If the block is given an upward velocity of 0.4 m/s when it is 75 mm above its equilibrium position, determine the equation which describes the motion and the maximum upward displacement of the block measured from the equilibrium position. Assume that positive displacement is downward.

$$p = \sqrt{\frac{k}{m}} = \sqrt{\frac{200}{6}} = 5.774$$

$$x = A \sin pt + B \cos pt$$

$$x = 0.075 \text{ m when } t = 0.$$

$$-0.075 = 0 + B; \qquad B = -0.075$$

$$v = Ap \cos pt - Bp \sin pt$$

$$v = -0.4 \text{ m/s when } t = 0,$$

$$-0.4 = A(5.774) - 0; \qquad A = -0.0693$$

Thus,

$$x = -0.0693 \sin (5.77t) - 0.075 \cos (5.77t) \qquad \textbf{Ans.}$$

$$C = \sqrt{A^2 + B^2} = \sqrt{(-0.0693)^2 + (-0.075)^2} = 0.102 \text{ m} \qquad \textbf{Ans.}$$

***22–8.** A 3-kg block is suspended from a spring having a stiffness of $k = 200$ N/m. If the block is pushed 50 mm upward from its equilibrium position and then released from rest, determine the equation that describes the motion. What are the amplitude and the frequency of the vibration? Assume that positive displacement is downward.

$$p = \sqrt{\frac{k}{m}} = \sqrt{\frac{200}{3}} = 8.165$$

$$f = \frac{p}{2\pi} = \frac{8.165}{2\pi} = 1.299 = 1.30 \text{ Hz} \qquad \textbf{Ans.}$$

$$x = A \sin pt + B \cos pt$$

$$x = -0.05 \text{ m when } t = 0,$$

$$-0.05 = 0 + B; \qquad B = -0.05$$

$$v = Ap \cos pt - Bp \sin pt$$

$$v = 0 \text{ when } t = 0,$$

$$0 = A(8.165) - 0; \qquad A = 0$$

Hence,

$$x = -0.05 \cos (8.16t) \qquad \textbf{Ans.}$$

$$C = \sqrt{A^2 + B^2} = \sqrt{(0)^2 + (-0.05)} = 0.05 \text{ m} = 50 \text{ mm} \qquad \textbf{Ans.}$$

© 2010 Pearson Education, Inc., Upper Saddle River, NJ. All rights reserved. This material is protected under all copyright laws as they currently exist. No portion of this material may be reproduced, in any form or by any means, without permission in writing from the publisher.

•22–9. A cable is used to suspend the 800-kg safe. If the safe is being lowered at 6 m/s when the motor controlling the cable suddenly jams (stops), determine the maximum tension in the cable and the frequency of vibration of the safe. Neglect the mass of the cable and assume it is elastic such that it stretches 20 mm when subjected to a tension of 4 kN.

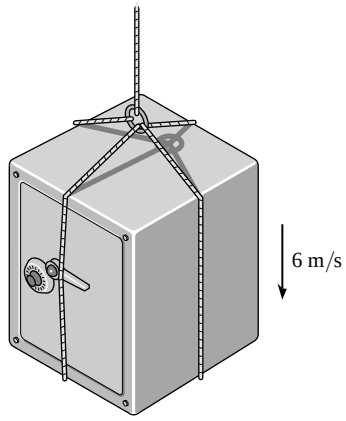

Free-body Diagram: Here the stiffness of the cable is $k = \frac{4000}{0.02} = 200\left(10^3\right)$ N/m. When the safe is being displaced by an amount y downward vertically from its equilibrium position, the *restoring force* that developed in the cable $T = W + ky = 800(9.81) + 200\left(10^3\right) y$.

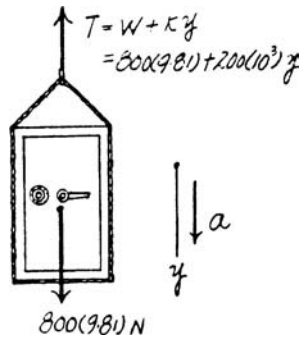

Equation of Motion:

$$+\uparrow \Sigma F_x = 0; \qquad 800(9.81) + 200\left(10^3\right) y - 800(9.81) = -800a \qquad \textbf{[1]}$$

Kinematics: Since $a = \frac{d^2y}{dt^2} = \ddot{y}$, then substituting this value into Eq. [1], we have

$$200\left(10^3\right) y = -800\ddot{y}$$

$$\ddot{y} + 250x = 0 \qquad \textbf{[2]}$$

From Eq. [2], $p^2 = 250$, thus, $p = 15.81$ rad/s. Applying Eq. 22–14, we have

$$f = \frac{p}{2\pi} = \frac{15.81}{2\pi} = 2.52 \text{ Hz} \qquad \textbf{Ans.}$$

The solution of the above differential equation (Eq. [2]) is in the form of

$$y = C \sin (15.81t + \phi) \qquad \textbf{[3]}$$

Taking the time derivative of Eq. [3], we have

$$\dot{y} = 15.81\, C \cos (15.81t + \phi) \qquad \textbf{[4]}$$

Applying the initial condition of $y = 0$ and $\dot{y} = 6$ m/s at $t = 0$ to Eqs. [3] and [4] yields

$$0 = C \sin \phi \qquad \textbf{[5]}$$

$$6 = 15.81\, C \cos \phi \qquad \textbf{[6]}$$

Solving Eqs. [5] and [6] yields

$$\phi = 0^\circ \qquad C = 0.3795 \text{ m}$$

Since $v_{\max} = C = 0.3795$ m, the maximum cable tension is given by

$$T_{\max} = W + ky_{\max} = 800(9.81) + 200\left(10^3\right)(0.3795) = 83.7 \text{ kN} \qquad \textbf{Ans.}$$

© 2010 Pearson Education, Inc., Upper Saddle River, NJ. All rights reserved. This material is protected under all copyright laws as they currently exist. No portion of this material may be reproduced, in any form or by any means, without permission in writing from the publisher.

22–10. The body of arbitrary shape has a mass m, mass center at G, and a radius of gyration about G of k_G. If it is displaced a slight amount θ from its equilibrium position and released, determine the natural period of vibration.

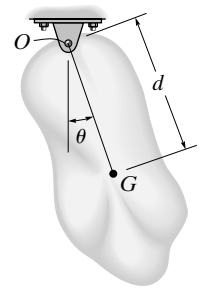

$$\circlearrowleft + \Sigma M_O = I_O\,\alpha; \qquad -mgd\sin\theta = \left[mk_G^2 + md^2\right]\ddot{\theta}$$

$$\ddot{\theta} + \frac{gd}{k_G^2 + d^2}\sin\theta = 0$$

However, for small rotation $\sin\theta \approx \theta$. Hence

$$\ddot{\theta} + \frac{gd}{k^2 + d^2}\theta = 0$$

From the above differential equation, $p = \sqrt{\dfrac{gd}{k_G^2 + d^2}}$.

$$\tau = \frac{2\pi}{p} = \frac{2\pi}{\sqrt{\dfrac{gd}{k_G^2 + d^2}}} = 2\pi\sqrt{\frac{k_G^2 + d^2}{gd}} \qquad \textbf{Ans.}$$

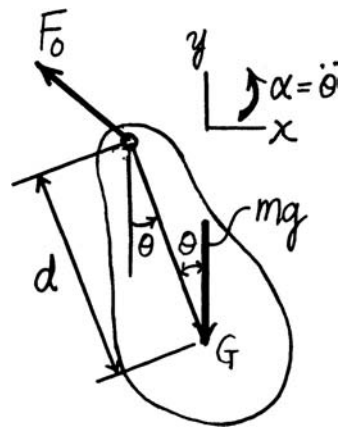

22–11. The circular disk has a mass m and is pinned at O. Determine the natural period of vibration if it is displaced a small amount and released.

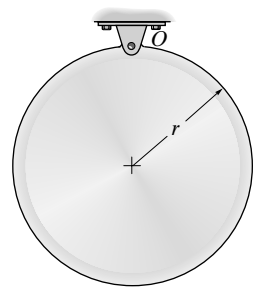

$$\circlearrowleft + \Sigma M_O = I_O\,\alpha; \qquad -mgr\theta = \left(\frac{3}{2}mr^2\right)\ddot{\theta}$$

$$\ddot{\theta} + \left(\frac{2g}{3r}\right)\theta = 0$$

$$p = \sqrt{\frac{2g}{3r}}$$

$$\tau = \frac{2\pi}{p} = 2\pi\sqrt{\frac{3r}{2g}} \qquad \textbf{Ans.}$$

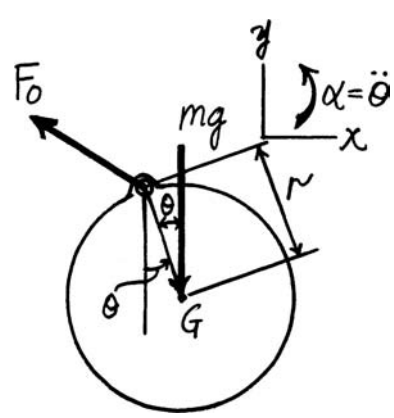

© 2010 Pearson Education, Inc., Upper Saddle River, NJ. All rights reserved. This material is protected under all copyright laws as they currently exist. No portion of this material may be reproduced, in any form or by any means, without permission in writing from the publisher.

***22–12.** The square plate has a mass m and is suspended at its corner from a pin O. Determine the natural period of vibration if it is displaced a small amount and released.

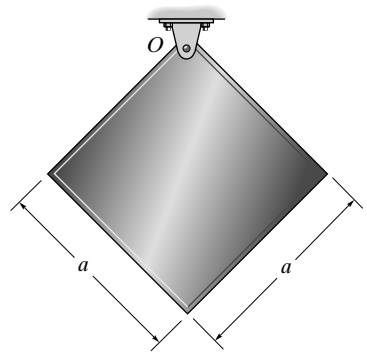

$$I_O = \frac{1}{12}m(a^2 + a^2) + m\left(\frac{\sqrt{2}}{2}a\right)^2 = \frac{1}{6}ma^2 + \frac{1}{2}ma^2 = \frac{2}{3}ma^2$$

$$\circlearrowleft + \Sigma M_O = I_O\,\alpha; \qquad -mg\left(\frac{\sqrt{2}}{2}a\right)\theta = \left(\frac{2}{3}ma^2\right)\ddot{\theta}$$

$$\dot{\theta} + \left(\frac{3\sqrt{2}g}{4a}\right)\theta = 0$$

$$p = \sqrt{\frac{3\sqrt{2}g}{4a}}$$

$$\tau = \frac{2\pi}{p} = 6.10\sqrt{\frac{a}{g}} \qquad \textbf{Ans.}$$

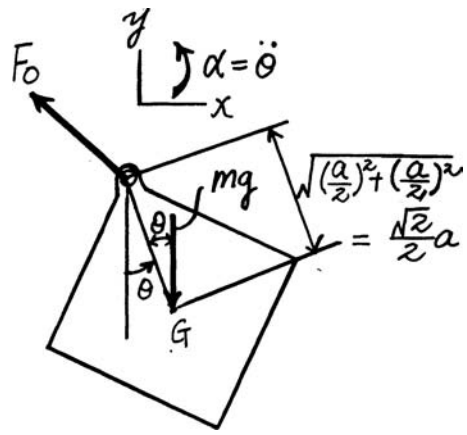

© 2010 Pearson Education, Inc., Upper Saddle River, NJ. All rights reserved. This material is protected under all copyright laws as they currently exist. No portion of this material may be reproduced, in any form or by any means, without permission in writing from the publisher.

•22–13. The connecting rod is supported by a knife edge at A and the period of vibration is measured as $\tau_A = 3.38$ s. It is then removed and rotated 180° so that it is supported by the knife edge at B. In this case the perod of vibration is measured as $\tau_B = 3.96$ s. Determine the location d of the center of gravity G, and compute the radius of gyration k_G.

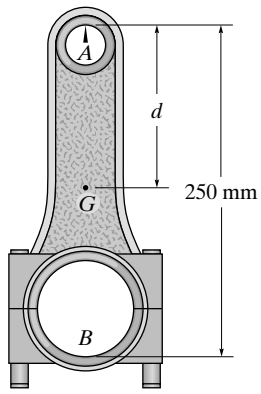

Free-body Diagram: When an object of arbitary shape having a mass m is pinned at O and is displaced by an angular displacement of θ, the tangential component of its weight will create the *restoring moment* about point O.

Equation of Motion: Sum monent about point O to eliminate O_x and O_y.

$$\circlearrowleft + \Sigma M_O = I_O \alpha; \qquad -mg \sin\theta(l) = I_O \alpha \qquad \textbf{[1]}$$

Kinematics: Since $\alpha = \dfrac{d^2\theta}{dt^2} = \ddot{\theta}$ and $\sin\theta = \theta$ if θ is small, then substitute these values into Eq. [1], we have

$$-mgl\theta = I_O\ddot{\theta} \qquad \text{or} \qquad \ddot{\theta} + \frac{mgl}{I_O}\theta = 0 \qquad \textbf{[2]}$$

From Eq. [2], $p^2 = \dfrac{mgl}{I_O}$, thus, $p = \sqrt{\dfrac{mgl}{I_O}}$. Applying Eq. 22–12, we have

$$\tau = \frac{2\pi}{p} = 2\pi\sqrt{\frac{I_O}{mgl}} \qquad \textbf{[3]}$$

When the rod is rotating about B, $\tau = \tau_A = 3.38$ s and $l = d$. Substitute these values into Eq. [3], we have

$$3.38 = 2\pi\sqrt{\frac{I_A}{mgd}} \qquad I_A = 0.2894mgd$$

When the rod is rotating about B, $\tau = \tau_B = 3.96$ s and $l = 0.25 - d$. Substitute these values into Eq. [3], we have

$$3.96 = 2\pi\sqrt{\frac{I_B}{mg\,(0.25 - d)}} \qquad I_B = 0.3972mg\,(0.25 - d)$$

However, the mass moment inertia of the rod about its mass center is

$$I_G = I_A - mg^2 = I_B - m(0.25 - d)^2$$

Then,

$$0.2894mgd - md^2 = 0.3972mg\,(0.25 - d) - m\,(0.25 - d)^2$$

$$d = 0.1462 \text{ m} = 146 \text{ mm} \qquad \textbf{Ans.}$$

Thus, the mass moment inertia of the rod about its mass center is

$$I_G = I_A - md^2 = 0.2894m\,(9.81)(0.1462) - m\left(0.1462^2\right) = 0.3937\,m$$

The radius of gyration is

$$k_G = \sqrt{\frac{I_G}{m}} = \sqrt{\frac{0.3937m}{m}} = 0.627 \text{ m} \qquad \textbf{Ans.}$$

© 2010 Pearson Education, Inc., Upper Saddle River, NJ. All rights reserved. This material is protected under all copyright laws as they currently exist. No portion of this material may be reproduced, in any form or by any means, without permission in writing from the publisher.

22–14. The disk, having a weight of 15 lb, is pinned at its center O and supports the block A that has a weight of 3 lb. If the belt which passes over the disk does not slip at its contacting surface, determine the natural period of vibration of the system.

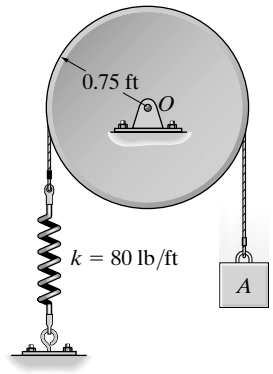

For equilibrium:

$T_{st} = 3$ lb

$\circlearrowleft \Sigma M_O = I_O\alpha + ma(0.75)$

$a = 0.75\alpha$

$$-T_{st}(0.75) - (80)(\theta)(0.75)(0.75) + (3)(0.75) = \left[\frac{1}{2}\left(\frac{15}{32.2}\right)(0.75)^2\right]\ddot{\theta} + \left(\frac{3}{32.2}\right)(0.75)\ddot{\theta}(0.75)$$

$$-2.25 - 45\theta + 2.25 = 0.131\ddot{\theta} + 0.05241\ddot{\theta}$$

$$\ddot{\theta} + 245.3\theta = 0$$

$$\tau = \frac{2\pi}{p} = \frac{2\pi}{\sqrt{245.3}} = 0.401 \text{ s} \qquad \textbf{Ans.}$$

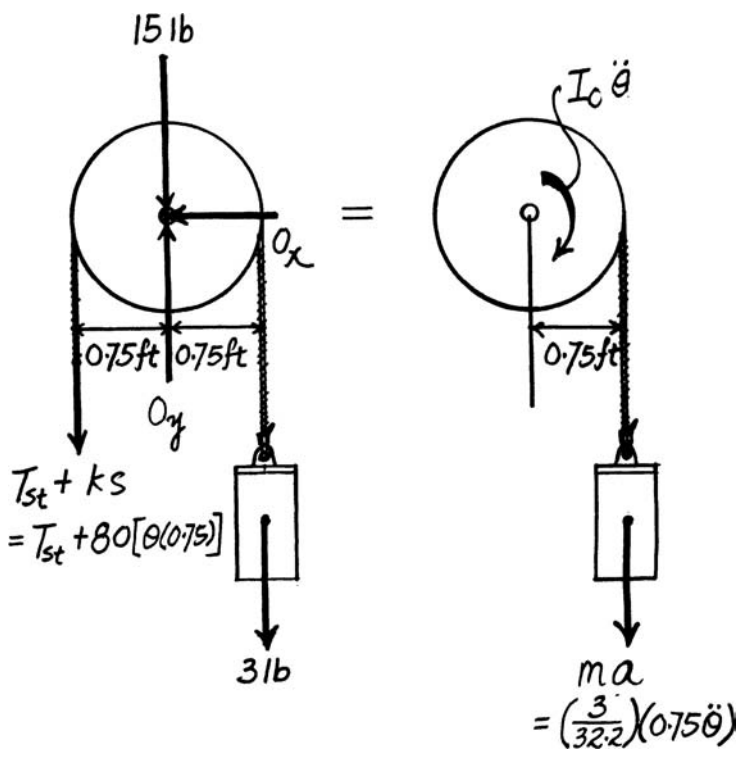

© 2010 Pearson Education, Inc., Upper Saddle River, NJ. All rights reserved. This material is protected under all copyright laws as they currently exist. No portion of this material may be reproduced, in any form or by any means, without permission in writing from the publisher.

22–15. The bell has a mass of 375 kg, a center of mass at G, and a radius of gyration about point D of $k_D = 0.4$ m. The tongue consists of a slender rod attached to the inside of the bell at C. If an 8-kg mass is attached to the end of the rod, determine the length l of the rod so that the bell will "ring silent," i.e., so that the natural period of vibration of the tongue is the same as that of the bell. For the calculation, neglect the small distance between C and D and neglect the mass of the rod.

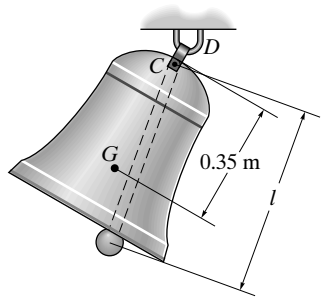

For an arbitrarily shaped body which rotates about a fixed point.

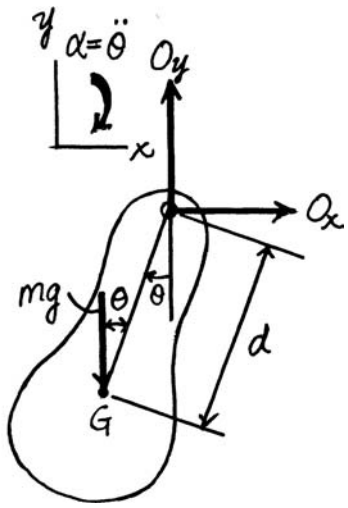

$$\circlearrowleft + \Sigma M_O = I_O\,\alpha; \qquad mgd\sin\theta = -I_O\,\ddot{\theta}$$

$$\ddot{\theta} + \frac{mgd}{I_O}\sin\theta = 0$$

However, for small rotation $\sin\theta \approx \theta$. Hence

$$\ddot{\theta} + \frac{mgd}{I_O}\theta = 0$$

From the above differential equation, $p = \sqrt{\dfrac{mgd}{I_O}}$.

$$\tau = \frac{2\pi}{p} = \frac{2\pi}{\sqrt{\dfrac{mgd}{I_O}}} = 2\pi\sqrt{\frac{I_O}{mgd}}$$

In order to have an equal period

$$\tau = 2\pi\sqrt{\frac{(I_O)_T}{m_T g d_T}} = 2\pi\sqrt{\frac{(I_O)_B}{m_B\,g d_B}}$$

$(I_O)_T =$ moment of inertia of tongue about O.

$(I_O)_B =$ moment of inertia of bell about O.

$$\frac{(I_O)_T}{m_T g d_T} = \frac{(I_O)_B}{m_B\,g d_B}$$

$$\frac{8(l^2)}{8gl} = \frac{375(0.4)^2}{375g(0.35)}$$

$$l = 0.457 \text{ m} \qquad \textbf{Ans.}$$

© 2010 Pearson Education, Inc., Upper Saddle River, NJ. All rights reserved. This material is protected under all copyright laws as they currently exist. No portion of this material may be reproduced, in any form or by any means, without permission in writing from the publisher.

***22–16.** The platform AB when empty has a mass of 400 kg, center of mass at G_1, and natural period of oscillation $\tau_1 = 2.38$ s. If a car, having a mass of 1.2 Mg and center of mass at G_2, is placed on the platform, the natural period of oscillation becomes $\tau_2 = 3.16$ s. Determine the moment of inertia of the car about an axis passing through G_2.

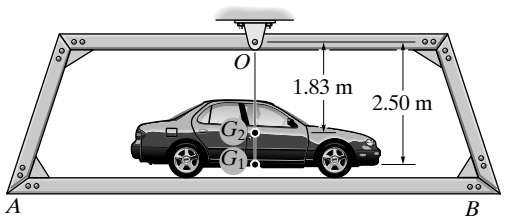

Free-body Diagram: When an object of arbitrary shape having a mass m is pinned at O and being displaced by and angular displacement of θ, the tangential component of its weight will create the *restoring moment* about point O.

Equation of Motion: Sum monent about point O to eliminate O_x and O_y.

$$\circlearrowleft + \Sigma M_O = I_O\,\alpha; \qquad -mg\sin\theta(l) = I_O\,\alpha \qquad \textbf{[1]}$$

Kinematics: Since $\alpha = \dfrac{d^2\theta}{dt^2} = \ddot{\theta}$ and $\sin\theta \approx \theta$ if θ is small, then substitute these values into Eq. [1], we have

$$-mgl\theta = I_O\ddot{\theta} \qquad \text{or} \qquad \ddot{\theta} + \frac{mgl}{I_O}\theta = 0 \qquad \textbf{[2]}$$

From Eq. [2], $p^2 = \dfrac{mgl}{I_O}$, thus, $p = \sqrt{\dfrac{mgl}{I_O}}$. Applying Eq. 22–12, we have

$$\tau = \frac{2\pi}{p} = 2\pi\sqrt{\frac{I_O}{mgl}} \qquad \textbf{[3]}$$

When the platform is empty, $\tau = \tau_1 = 2.38$ s. $m = 400$ kg and $l = 250$ m. Substitute these values into Eq. [3], we have

$$2.38 = 2\pi\sqrt{\frac{(I_O)_p}{400(9.81)(2.50)}} \qquad (I_O)_p = 1407.55\ \text{kg}\cdot\text{m}^2$$

When the car is on the platform, $\tau = \tau_2 = 3.16$ s, $m = 400\ \text{kg} + 1200\ \text{kg} = 1600\ kg$, $l = \dfrac{2.50(400) + 1.83(1200)}{1600} = 1.9975$ m and $I_O = (I_O)_C + (I_O)_p = (I_O)_C + 1407.55$. Substitute these values into Eq. [3], we have

$$3.16 = 2\pi\sqrt{\frac{(I_O)_C + 1407.55}{1600(9.81)(1.9975)}} \qquad (I_O)_C = 6522.76\ \text{kg}\cdot\text{m}^2$$

Thus, the mass moment inertia of the car about its mass center is

$$(I_G)_C = (I_O)_C - m_C d^2$$
$$= 6522.76 - 1200\left(1.83^2\right) = 2.50\left(10^3\right)\ \text{kg}\cdot\text{m}^2 \qquad \textbf{Ans.}$$

© 2010 Pearson Education, Inc., Upper Saddle River, NJ. All rights reserved. This material is protected under all copyright laws as they currently exist. No portion of this material may be reproduced, in any form or by any means, without permission in writing from the publisher.

•22–17. The 50-lb wheel has a radius of gyration about its mass center G of $k_G = 0.7$ ft. Determine the frequency of vibration if it is displaced slightly from the equilibrium position and released. Assume no slipping.

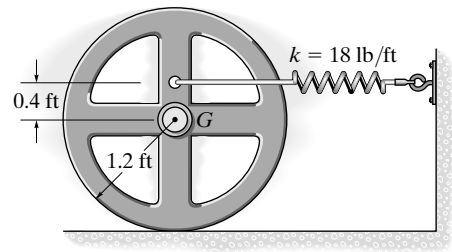

Kinematics: Since the wheel rolls without slipping, then $a_G = \alpha r = 1.2\alpha$. Also when the wheel undergoes a small angular displacement θ about point A, the spring is stretched by $x = 1.6 \sin\theta\,\theta$. Since θ us small, then $\sin\theta - \theta$. Thus, $x = 1.6\,\theta$.

Free-body Diagram: The spring force $F_{sp} = kx = 18(1.6\theta) = 28.8\theta$ will create the *restoring moment* about point A.

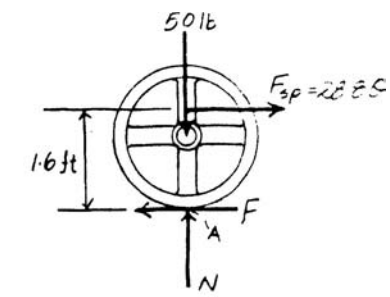

Equation of Motion: The mass moment inertia of the wheel about its mass center is $I_G = mk_G^2 = \frac{50}{32.2}\left(0.7^2\right) = 0.7609 \text{ slug}\cdot\text{ft}^2$.

$$\circlearrowleft + \Sigma M_A = (M_k)_A; \qquad -28.8\theta(1.6) = \frac{50}{32.2}(1.2\alpha)(1.2) + 0.7609\alpha$$

$$\alpha + 15.376\theta = 0 \qquad \textbf{[1]}$$

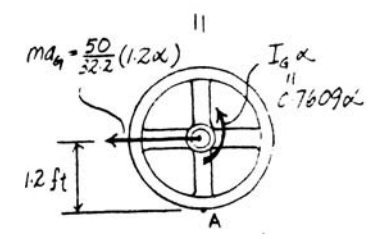

Since $\alpha = \frac{d^2\theta}{dt^2} = \ddot{\theta}$, then substitute this values into Eq. [1], we have

$$\ddot{\theta} + 15.376\theta = 0 \qquad \textbf{[2]}$$

From Eq. [2], $p^2 = 15.376$, thus, $p = 3.921$ rad/s. Applying Eq. 22–14, we have

$$f = \frac{p}{2\pi} = \frac{3.921}{2\pi} = 0.624 \text{ Hz} \qquad \textbf{Ans.}$$

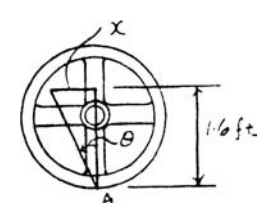

© 2010 Pearson Education, Inc., Upper Saddle River, NJ. All rights reserved. This material is protected under all copyright laws as they currently exist. No portion of this material may be reproduced, in any form or by any means, without permission in writing from the publisher.

22–18. The two identical gears each have a mass of m and a radius of gyration about their center of mass of k_0. They are in mesh with the gear rack, which has a mass of M and is attached to a spring having a stiffness k. If the gear rack is displaced slightly horizontally, determine the natural period of oscillation.

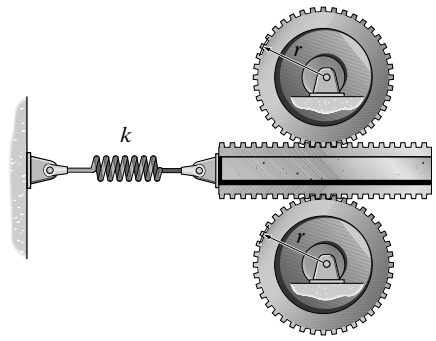

Equation of Motion: When the gear rack is displaced horizontally downward by a small distance x, the spring is stretched by $s_1 = x$ Thus, $F_{sp} = kx$. Since the gears rotate about fixed axes, $\bar{x} = \dot{\theta} r$ or $\dot{\theta} = \frac{\bar{x}}{r}$. The mass moment of inertia of a gear about its mass center is $I_O = mk_O{}^2$. Referring to the free-body diagrams of the rack and gear in Figs. a and b,

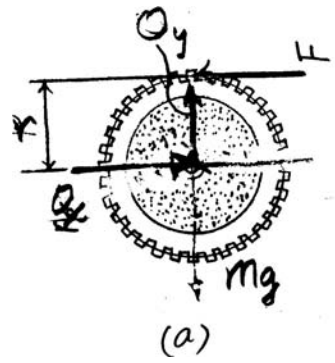

$$+\rightarrow \Sigma F_x = ma_x; \qquad 2F - (kx) = M\bar{x}$$

$$2F - kx = M\bar{x} \qquad \textbf{(1)}$$

and

$$\circlearrowleft + \Sigma M_O = I_O\,\alpha; \qquad -F(r) = mk_O{}^2\left(\frac{\bar{x}}{r}\right)$$

$$F = -\frac{mk_O{}^2}{r^2}\bar{x} \qquad \textbf{(2)}$$

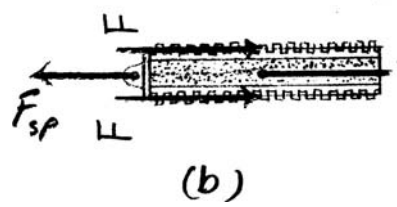

Eliminating **F** from Eqs. (1) and (2),

$$M\bar{x} + \frac{2mk_O{}^2}{r^2}\bar{x} + kx = 0$$

$$\bar{x} + \left(\frac{kr^2}{Mr^2 + 2mk_O{}^2}\right)x = 0$$

Comparing this equation to that of the standard from, the natural circular frequency of the system is

$$\omega_n = \sqrt{\frac{kr^2}{Mr^2 + 2mk_O{}^2}}$$

Thus, the natural period of the oscillation is

$$\tau = \frac{2\pi}{\omega_n} = 2\pi\sqrt{\frac{Mr^2 + 2mk_O{}^2}{kr^2}} \qquad \textbf{Ans.}$$

© 2010 Pearson Education, Inc., Upper Saddle River, NJ. All rights reserved. This material is protected under all copyright laws as they currently exist. No portion of this material may be reproduced, in any form or by any means, without permission in writing from the publisher.

22–19. In the "lump mass theory", a single-story building can be modeled in such a way that the whole mass of the building is lumped at the top of the building, which is supported by a cantilever column of negligible mass as shown. When a horizontal force **P** is applied to the model, the column deflects an amount of $\delta = PL^3/12EI$, where L is the effective length of the column, E is Young's modulus of elasticity for the material, and I is the moment of inertia of the cross section of the column. If the lump mass is m, determine the frequency of vibration in terms of these parameters.

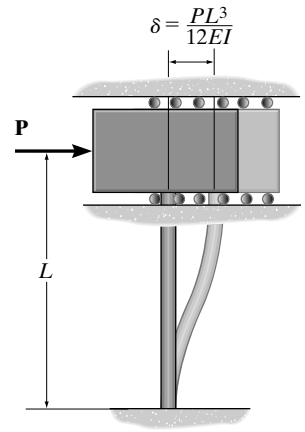

Since δ very small, the vibration can be assumed to occur along the horizontal. Here, the equivalent spring stiffness of the cantilever column is $k_{eq} = \frac{P}{\delta} = \frac{P}{PL^3/12EI} = \frac{12EI}{I^3}$. Thus, the natural circular frequency of the system is

$$\omega_n = \sqrt{\frac{k_{eq}}{m}} = \sqrt{\frac{\frac{12EI}{I^3}}{m}} = \sqrt{\frac{12EI}{mL^3}}$$

Then the natural frequency of the system is

$$f_n = \frac{\omega_n}{2\pi} = \frac{1}{2\pi}\sqrt{\frac{12EI}{mL^3}} \qquad \textbf{Ans.}$$

***22–20.** A flywheel of mass m, which has a radius of gyration about its center of mass of k_O, is suspended from a circular shaft that has a torsional resistance of $M = C\theta$. If the flywheel is given a small angular displacement of θ and released, determine the natural period of oscillation.

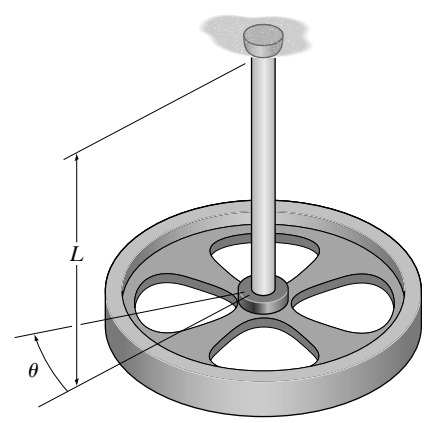

Equation of Motion: The mass moment of inertia of the wheel about point O is $I_O = mk_O{}^2$. Referring to Fig. a,

$$\circlearrowleft + \qquad \Sigma M_O = I_O\,\alpha; \qquad -C\theta = mk_O{}^2\ddot{\theta}$$

$$\ddot{\theta} + \frac{C}{mk_O{}^2}\theta = 0$$

Comparing this equation to the standard equation, the natural circular frequency of the wheel is

$$\omega_n = \sqrt{\frac{C}{mk_O{}^2}} = \frac{1}{k_O}\sqrt{\frac{C}{m}}$$

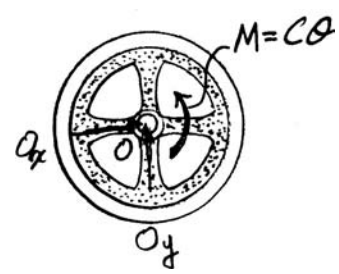

Thus, the natural period of the oscillation is

$$\tau = \frac{2\pi}{\omega_n} = 2\pi k_O\sqrt{\frac{m}{C}} \qquad \textbf{Ans.}$$

© 2010 Pearson Education, Inc., Upper Saddle River, NJ. All rights reserved. This material is protected under all copyright laws as they currently exist. No portion of this material may be reproduced, in any form or by any means, without permission in writing from the publisher.

•22–21. The cart has a mass of m and is attached to two springs, each having a stiffness of $k_1 = k_2 = k$, unstretched length of l_0, and a stretched length of l when the cart is in the equilibrium position. If the cart is displaced a distance of $x = x_0$ such that both springs remain in tension $(x_0 < l - l_0)$, determine the natural frequency of oscillation.

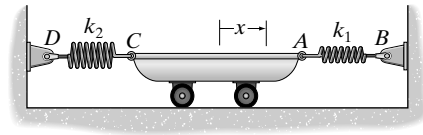

Equation of Motion: When the cart is displaced x to the right, the stretch of springs AB and CD are $s_{AB} = (l - l_0) - x_0$ and $s_{AC} = (l - l_0) + x$. Thus, $F_{AB} = ks_{AB} = k[(l - l_0) - x]$ and $F_{AC} = ks_{AC} = k[(l - l_0) + x]$. Referring to the free-body diagram of the cart shown in Fig. a,

$$\overset{+}{\rightarrow} \Sigma F_x = ma_x; \qquad k[(l - l_0) - x] - k[(l - l_0) + x] = m\bar{x}$$

$$-2kx = m\bar{x}$$

$$\bar{x} + \frac{2k}{m}x = 0$$

Simple Harmonic Motion: Comparing this equation with that of the standard form, the natural circular frequency of the system is

$$\omega_n = \sqrt{\frac{2k}{m}} \qquad \textbf{Ans.}$$

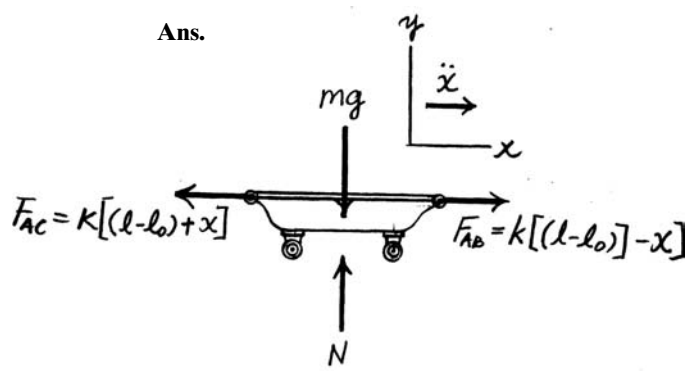

22–22. The cart has a mass of m and is attached to two springs, each having a stiffness of k_1 and k_2, respectively. If both springs are unstretched when the cart is in the equilibrium position shown, determine the natural frequency of oscillation.

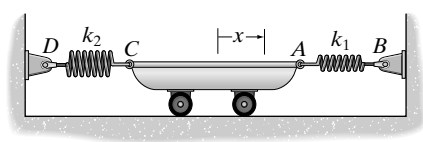

Equation of Motion: When the cart is displaced x to the right, spring CD stretches $s_{CD} = x$ and spring AB compresses $s_{AB} = x$. Thus, $F_{CD} = k_2 s_{CD} = k_2 x$ and $F_{AB} = k_1 s_{AB} = k_1 x$. Referring to the free-body diagram of the cart shown in Fig. a,

$$\overset{+}{\rightarrow} \Sigma F_x = ma_x; \qquad -k_1 x - k_2 x = m\bar{x}$$

$$-(k_1 + k_2)x = m\bar{x}$$

$$\bar{x} + \left(\frac{k_1 + k_2}{m}\right)x = 0$$

Simple Harmonic Motion: Comparing this equation with that of the standard equation, the natural circular frequency of the system is

$$\omega_n = \sqrt{\frac{k_1 + k_2}{m}} \qquad \textbf{Ans.}$$

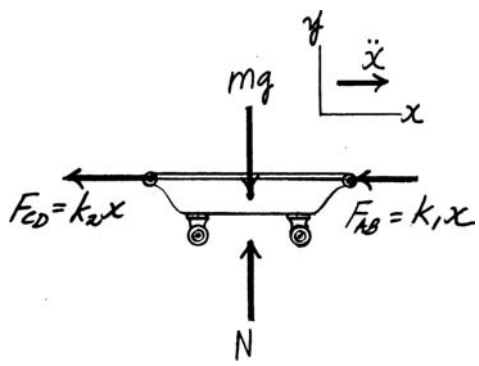

© 2010 Pearson Education, Inc., Upper Saddle River, NJ. All rights reserved. This material is protected under all copyright laws as they currently exist. No portion of this material may be reproduced, in any form or by any means, without permission in writing from the publisher.

22–23. The 3-kg target slides freely along the smooth horizontal guides BC and DE, which are 'nested' in springs that each have a stiffness of $k = 9$ kN/m. If a 60-g bullet is fired with a velocity of 900 m/s and embeds into the target, determine the amplitude and frequency of oscillation of the target.

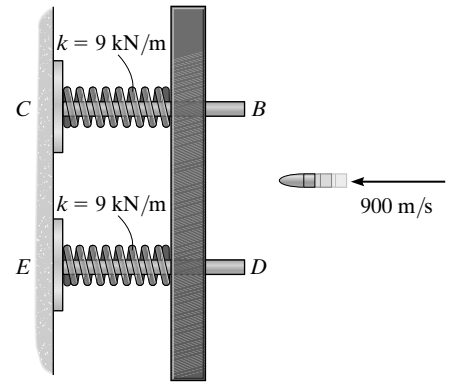

Conservation of Linear Momentum: The velocity of the target after impact can be determined from

$$m_b(v_b)_1 = (m_b + m_A)v$$

$$0.06(900) = (0.06 + 3)v$$

$$v = 17.65 \text{ m/s}$$

Since the springs are arranged in parallel, the equivalent stiffness of a single spring is $k_{eq} = 2k = 2(9000 \text{ N/m}) = 18000$ N/m. Thus, the natural circular frequency of the system is

$$\omega_n = \sqrt{\frac{k_{eq}}{m}} = \sqrt{\frac{18000}{3.06}} = 76.70 \text{ rad/s} = 76.7 \text{ rad/s} \qquad \textbf{Ans.}$$

The equation that describes the oscillation of the system is

$$y = C \sin(76.70t + \phi) \text{ m} \qquad \textbf{(1)}$$

Since $y = 0$ when $t = 0$,

$$0 = C \sin \phi$$

Since $C \neq 0$, $\sin \phi = 0$. Then $\phi = 0°$. Thus, Eq. (1) becomes

$$y = C \sin(76.70t) \qquad \textbf{(2)}$$

Taking the time derivative of Eq. (2),

$$\dot{y} = v = 76.70C \cos(76.70t) \text{ m/s} \qquad \textbf{(3)}$$

Here, $v = 17.65$ m/s when $t = 0$. Thus, Eq. (3) gives

$$17.65 = 76.70C \cos 0$$

$$C = 0.2301 \text{ m} = 230 \text{ mm} \qquad \textbf{Ans.}$$

© 2010 Pearson Education, Inc., Upper Saddle River, NJ. All rights reserved. This material is protected under all copyright laws as they currently exist. No portion of this material may be reproduced, in any form or by any means, without permission in writing from the publisher.

***22–24.** If the spool undergoes a small angular displacement of θ and is then released, determine the frequency of oscillation. The spool has a mass of 50 kg and a radius of gyration about its center of mass O of $k_O = 250$ mm. The spool rolls without slipping.

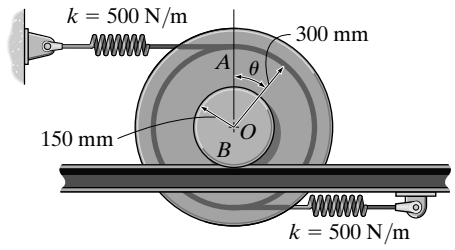

Equation of Motion: Referring to the kinematic diagram of the spool, Fig. *a*, the stretch of the spring at A and B when the spool rotates through a small angle θ is $s_A = \theta r_{A/IC} = \theta(0.45)$ and $s_B = \theta r_{B/IC} = \theta(0.15)$. Thus, $(F_{sp})_A = ks_A = 500[\theta(0.45)] = 225\theta$ and $(F_{sp})_B = ks_B = 500[\theta(0.15)] = 75\theta$. Also, $a_O = \ddot{\theta} r_{O/IC} = \ddot{\theta}(0.15)$. The mass moment of inertia of the spool about its mass center is $I_O = mk_O{}^2 = 50(0.25^2) = 3.125\ \text{kg}\cdot\text{m}^2$. Referring the free-body and kinetic diagrams of the spool, Fig. *b*,

$$+ \qquad \Sigma M_{IC} = \Sigma(M_k)_{IC}; \quad -225\theta(0.045) - 75\theta(0.15) = 50[\ddot{\theta}(0.15)](0.15) + 3.125\ddot{\theta}$$

$$-112.5\theta = 4.25\ddot{\theta}$$

$$\ddot{\theta} + 26.47\theta = 0$$

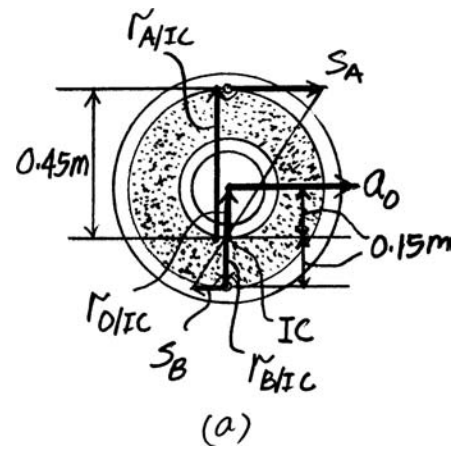

Comparing this equation to that of the standard equation, the natural circular frequency of the spool is

$$\omega_n = \sqrt{26.47}\ \text{rad/s} = 5.145\ \text{rad/s}$$

Thus, the natural frequency of the oscillation is

$$f_n = \frac{\omega_n}{2\pi} = \frac{5.145}{2\pi} = 0.819\ \text{Hz} \qquad \textbf{Ans.}$$

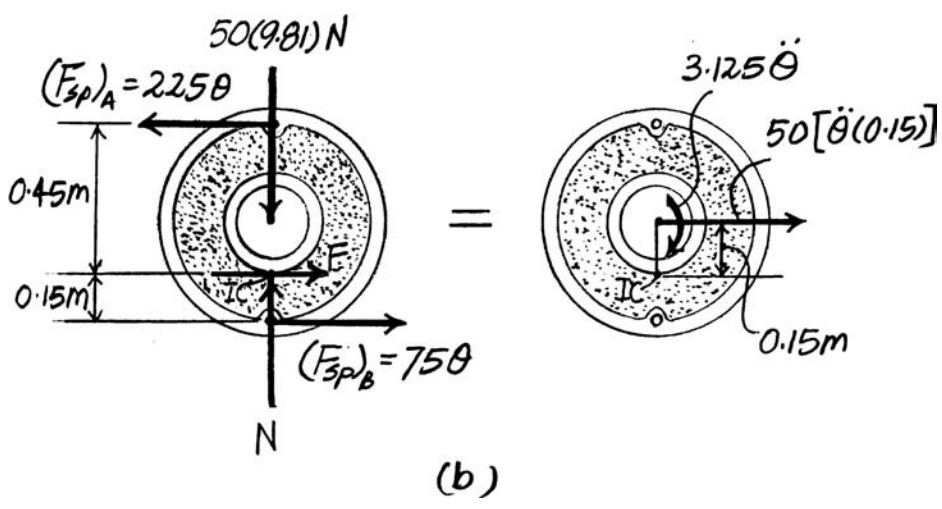

© 2010 Pearson Education, Inc., Upper Saddle River, NJ. All rights reserved. This material is protected under all copyright laws as they currently exist. No portion of this material may be reproduced, in any form or by any means, without permission in writing from the publisher.

•22–25. The slender bar of mass m is supported by two equal-length cords. If it is given a small angular displacement of θ about the vertical axis and released, determine the natural period of oscillation.

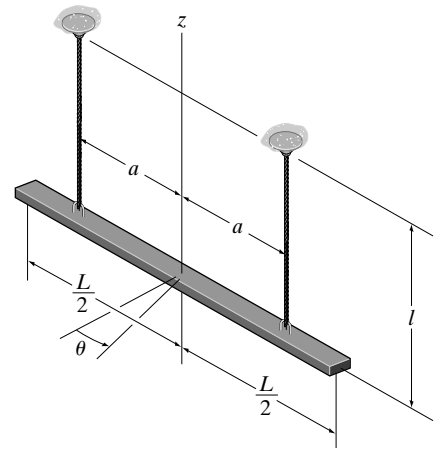

Equation of Motion: The mass moment of inertia of the bar about the z axis is $I_z = \frac{1}{12}mL^2$. Referring to the free-body diagram of the bar shown in Fig. a,

$$+\uparrow \Sigma F_z = ma_z; \qquad 2T\cos\phi - mg = 0 \qquad\qquad T = \frac{mg}{2\cos\phi}$$

Then,

$$\uparrow + \Sigma M_z = I_z\alpha; \qquad -2\left(\frac{mg}{2\cos\phi}\right)\sin\phi(a) = \left(\frac{1}{12}mL^2\right)\ddot{\theta}$$

$$\ddot{\theta} + \frac{12ga}{L^2}\tan\phi = 0 \qquad \textbf{(1)}$$

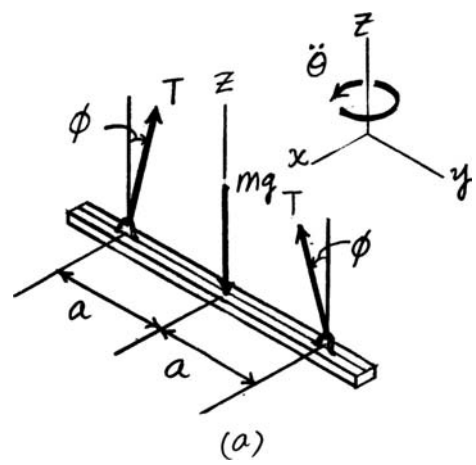

Since θ is very small, from the geometry of Fig. b,

$$l\phi = a\theta$$

$$\phi = \frac{a}{l}\theta$$

Substituting this result into Eq. (1)

$$\ddot{\theta} + \frac{12ga}{L^2}\tan\left(\frac{a}{l}\theta\right) = 0$$

Since θ is very small, $\tan\left(\frac{g}{l}\theta\right) \cong \frac{g}{l}\theta$. Thus,

$$\ddot{\theta} + \frac{12ga^2}{IL^2}\theta = 0$$

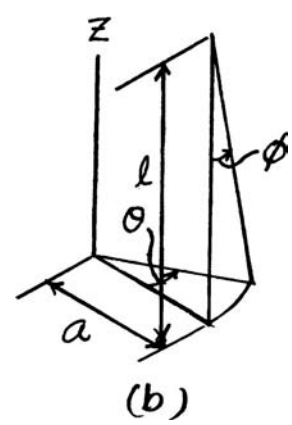

Comparing this equation to that of the standard form, the natural circular frequency of the bar is

$$\omega_n = \sqrt{\frac{12ga^2}{IL^2}} = \frac{a}{L}\sqrt{\frac{12g}{l}}$$

Thus, the natural period of oscillation is

$$\tau = \frac{2\pi}{\omega_n} = \frac{2\pi L}{a}\sqrt{\frac{l}{12g}} \qquad \textbf{Ans.}$$

© 2010 Pearson Education, Inc., Upper Saddle River, NJ. All rights reserved. This material is protected under all copyright laws as they currently exist. No portion of this material may be reproduced, in any form or by any means, without permission in writing from the publisher.

22–26. A wheel of mass m is suspended from two equal-length cords as shown. When it is given a small angular displacement of θ about the z axis and released, it is observed that the period of oscillation is τ. Determine the radius of gyration of the wheel about the z axis.

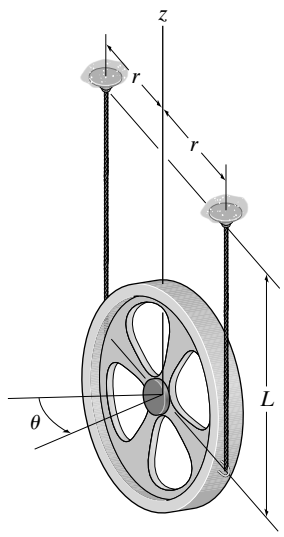

Equation of Motion: The mass moment of inertia of the wheel about is z axis is $I_z = mk_z{}^2$. Referring to the free-body diagram of the wheel shown in Fig. a,

$$+\uparrow \Sigma F_z = ma_z; \qquad 2T\cos\phi - mg = 0 \qquad\qquad T = \frac{mg}{2\cos\phi}$$

Then,

$$\uparrow + \Sigma M_z = I_z\,\alpha; \qquad\qquad -2\left(\frac{mg}{2\cos\phi}\right)\sin\phi(\mathrm{r}) = \left(\mathrm{mk_z}{}^2\right)\ddot{\theta}$$

$$\ddot{\theta} + \frac{gr}{k_z{}^2}\tan\phi = 0 \qquad\qquad \textbf{(1)}$$

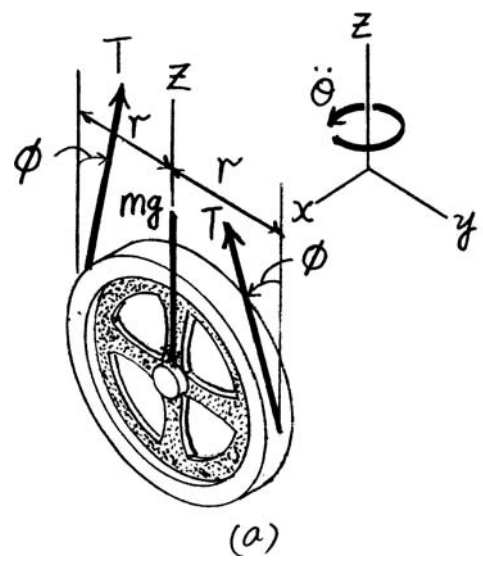

Since θ is very small, from the geometry of Fig. b,

$$L\phi = r\theta$$

$$\phi = \frac{r}{L}\theta$$

Substituting this result into Eq. (1)

$$\ddot{\theta} + \frac{gr}{k_z{}^2}\tan\left(\frac{r}{L}\theta\right) = 0$$

Since θ is very small, $\tan\left(\frac{r}{L}\theta\right) \cong \frac{r}{L}\theta$. Thus,

$$\ddot{\theta} + \frac{gr^2}{k_z{}^2 L}\theta = 0$$

Comparing this equation to that of the standard form, the natural circular frequency of the wheel is

$$\omega_n = \sqrt{\frac{gr^2}{k_z{}^2 L}} = \frac{r}{k_z}\sqrt{\frac{g}{L}}$$

Thus, the natural period of oscillation is

$$\tau = \frac{2\pi}{\omega_n}$$

$$\tau = 2\pi\left(\frac{k_z}{r}\sqrt{\frac{L}{g}}\right)$$

$$k_z = \frac{\tau r}{2\pi}\sqrt{\frac{g}{L}} \qquad\qquad \textbf{Ans.}$$

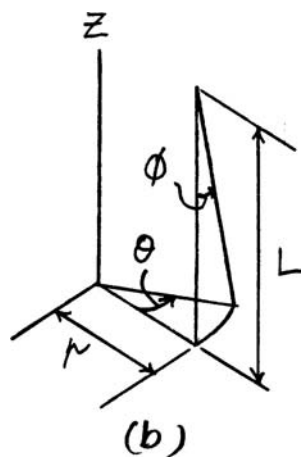

© 2010 Pearson Education, Inc., Upper Saddle River, NJ. All rights reserved. This material is protected under all copyright laws as they currently exist. No portion of this material may be reproduced, in any form or by any means, without permission in writing from the publisher.

22–27. A wheel of mass m is suspended from three equal-length cords. When it is given a small angular displacement of θ about the z axis and released, it is observed that the period of oscillation is τ. Determine the radius of gyration of the wheel about the z axis.

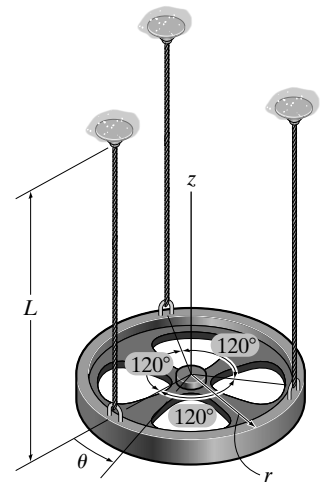

Equation of Motion: Due to symmetry, the force in each cord is the same. The mass moment of inertia of the wheel about is z axis is $I_z = mk_z{}^2$. Referring to the free-body diagram of the wheel shown in Fig. a,

$$+\uparrow \Sigma F_z = ma_z; \qquad 3T\cos\phi - mg = 0 \qquad\qquad T = \frac{mg}{3\cos\phi}$$

Then,

$$\uparrow + \Sigma M_z = I_z\,\alpha; \qquad\qquad -3\left(\frac{mg}{3\cos\phi}\right)\sin\phi(\mathrm{r}) = mk_z{}^2\ddot{\theta}$$

$$\ddot{\theta} + \frac{gr}{k_z{}^2}\tan\phi = 0 \qquad \textbf{(1)}$$

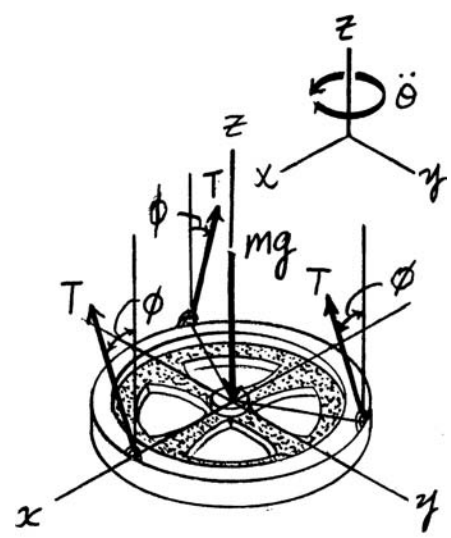

(a)

Since θ is very small, from the geometry of Fig. b,

$$r\theta = L\phi$$

$$\phi = \frac{r}{L}\theta$$

Substituting this result into Eq. (1)

$$\ddot{\theta} + \frac{gr}{k_z{}^2}\tan\left(\frac{r}{L}\theta\right) = 0 \qquad \textbf{(2)}$$

Since θ is very small, $\tan\left(\frac{r}{L}\theta\right) \cong \frac{r}{L}\theta$. Thus,

$$\ddot{\theta} + \frac{gr^2}{kz^2L}\theta = 0$$

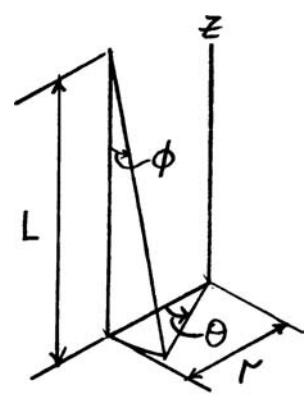

(b)

Comparing this equation to that of the standard form, the natural circular frequency of the wheel is

$$\omega_n = \sqrt{\frac{gr^2}{k_z{}^2L}} = \frac{r}{k_z}\sqrt{\frac{g}{L}}$$

Thus, the natural period of oscillation is

$$\tau = \frac{2\pi}{\omega_n}$$

$$\tau = 2\pi\left(\frac{k_z}{r}\sqrt{\frac{L}{g}}\right)$$

$$k_z = \frac{\tau r}{2\pi}\sqrt{\frac{g}{L}} \qquad \textbf{Ans.}$$

© 2010 Pearson Education, Inc., Upper Saddle River, NJ. All rights reserved. This material is protected under all copyright laws as they currently exist. No portion of this material may be reproduced, in any form or by any means, without permission in writing from the publisher.

***22–28.** Solve Prob. 22–10 using energy methods.

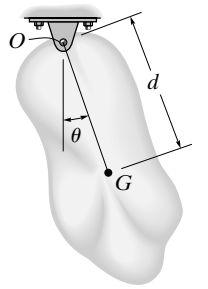

$$T + V = \frac{1}{2}\left[mk_G^2 + md^2\right]\dot{\theta}^2 + mg(d)(1 - \cos\theta)$$

$$\left(k_G^2 + d^2\right)\dot{\theta}\,\ddot{\theta} + gd(\sin\theta)\dot{\theta} = 0$$

$$\sin\theta = \theta$$

$$\ddot{\theta} + \frac{gd}{\left(k_G^2 + d^2\right)}\theta = 0$$

$$\tau = \frac{2\pi}{p} = 2\pi\sqrt{\frac{\left(k_G^2 + d^2\right)}{gd}}$$

Ans.

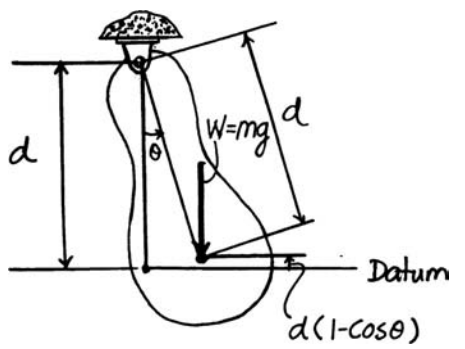

•22–29. Solve Prob. 22–11 using energy methods.

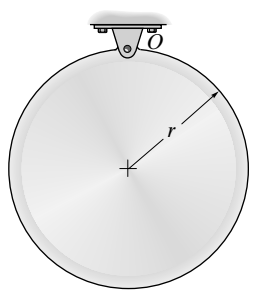

$$T + V = \frac{1}{2}\left[\frac{3}{2}mr^2\right]\dot{\theta}^2 + mg(r)(1 - \cos\theta)$$

$$\frac{3}{2}mr^2\,\dot{\theta}\dot{\theta} + mg(r)(\sin\theta)\dot{\theta} = 0$$

$$\sin\theta = \theta$$

$$\theta + \left(\frac{2}{3}\right)\left(\frac{g}{r}\right)\theta = 0$$

$$\tau = \frac{2\pi}{p} = 2\pi\sqrt{\frac{3r}{2g}}$$

Ans.

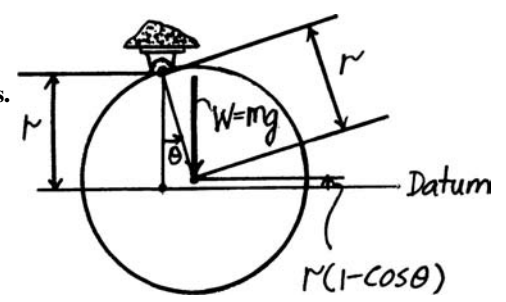

© 2010 Pearson Education, Inc., Upper Saddle River, NJ. All rights reserved. This material is protected under all copyright laws as they currently exist. No portion of this material may be reproduced, in any form or by any means, without permission in writing from the publisher.

22–30. Solve Prob. 22–12 using energy methods.

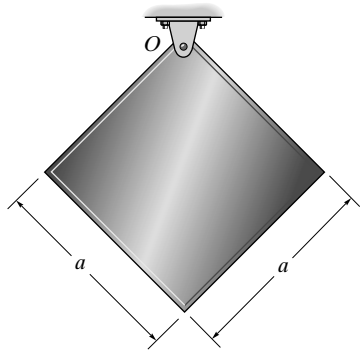

$$T + V = \frac{1}{2}\left[\frac{1}{12}m\left(a^2 + a^2\right) + m\left(\frac{a}{\sqrt{2}}\right)^2\right]\dot{\theta}^2 + mg\left(\frac{a}{\sqrt{2}}\right)(1 - \cos\theta)$$

$$\frac{2}{3}ma^2\,\dot{\theta}\,\ddot{\theta} + mg\left(\frac{a}{\sqrt{2}}\right)(\sin\theta)\dot{\theta} = 0$$

$$\sin\theta = \theta$$

$$\theta + \frac{3g}{2\sqrt{2}a}\theta = 0$$

$$\tau = \frac{2\pi}{p} = \frac{2\pi}{1.0299}\left(\sqrt{\frac{a}{g}}\right) = 6.10\sqrt{\frac{a}{g}}$$ **Ans.**

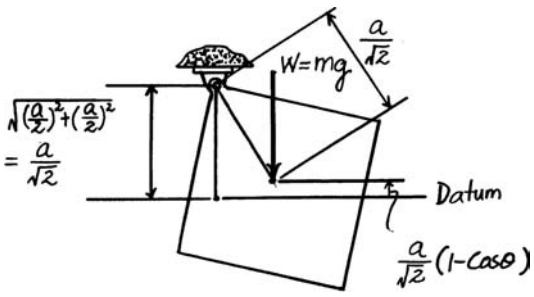

22–31. Solve Prob. 22–14 using energy methods.

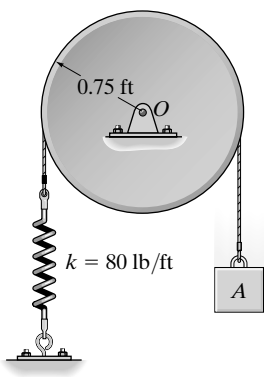

$$s = 0.75\theta, \qquad \dot{s} = 0.75\dot{\theta}$$

$$T + V = \frac{1}{2}\left[\frac{1}{2}\left(\frac{15}{32.2}\right)(0.75)^2\right]\dot{\theta}^2 + \frac{1}{2}\left(\frac{3}{32.2}\right)\left(0.75\,\dot{\theta}\right)^2$$

$$+ \frac{1}{2}(80)\,(s_{eq} + 0.75\theta)^2 - 3(0.75\theta)$$

$$0 = 0.1834\dot{\theta}\,\ddot{\theta} + 80(s_{eq} + 0.75\theta)\left(0.75\,\dot{\theta}\right) - 2.25\dot{\theta}$$

$$F_{eq} = 80s_{eq} = 3$$

$$s_{eq} = 0.0375 \text{ ft}$$

Thus,

$$0.1834\ddot{\theta} + 45\theta = 0$$

$$\ddot{\theta} + 245.36 = 0$$

$$\tau = \frac{2\pi}{p} = \frac{2\pi}{\sqrt{245.3}} = 0.401 \text{ s}$$ **Ans.**

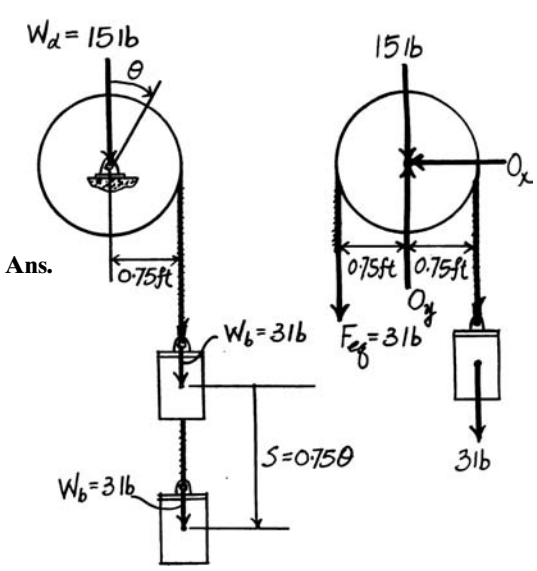

© 2010 Pearson Education, Inc., Upper Saddle River, NJ. All rights reserved. This material is protected under all copyright laws as they currently exist. No portion of this material may be reproduced, in any form or by any means, without permission in writing from the publisher.

***22–32.** The machine has a mass m and is uniformly supported by *four* springs, each having a stiffness k. Determine the natural period of vertical vibration.

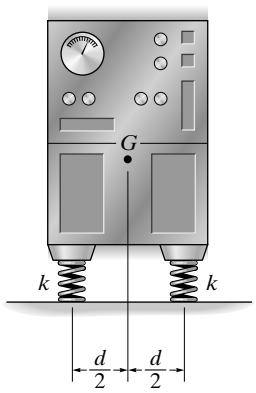

$$T + V = \text{const.}$$

$$T = \frac{1}{2} m(\dot{y})^2$$

$$V = m\,g\,y + \frac{1}{2}(4k)(\Delta s - y)^2$$

$$T + V = \frac{1}{2} m(\dot{y})^2 + m\,g\,y + \frac{1}{2}(4k)(\Delta s - y)^2$$

$$m\,\dot{y}\,\ddot{y} + m\,g\,\dot{y} - 4k(\Delta s y)\dot{y} = 0$$

$$m\,\ddot{y} + m\,g + 4ky - 4k\Delta s = 0$$

Since $\Delta s = \dfrac{mg}{4k}$

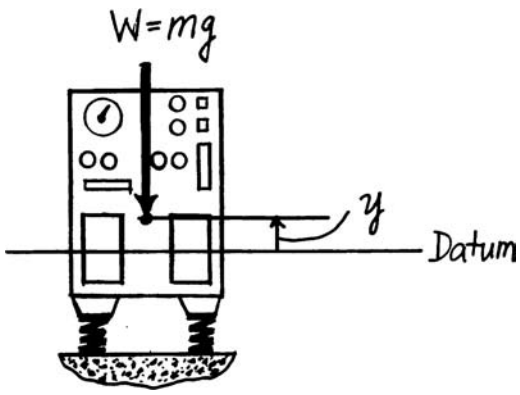

Then

$$m\ddot{y} + 4ky = 0$$

$$y + \frac{4k}{m} y = 0$$

$$p = \sqrt{\frac{4k}{m}}$$

$$\tau = \frac{2\pi}{p} = \pi\sqrt{\frac{m}{k}}$$ **Ans.**

© 2010 Pearson Education, Inc., Upper Saddle River, NJ. All rights reserved. This material is protected under all copyright laws as they currently exist. No portion of this material may be reproduced, in any form or by any means, without permission in writing from the publisher.

•22–33. Determine the differential equation of motion of the 15-kg spool. Assume that it does not slip at the surface of contact as it oscillates. The radius of gyration of the spool about its center of mass is $k_G = 125$ mm. The springs are originally unstretched.

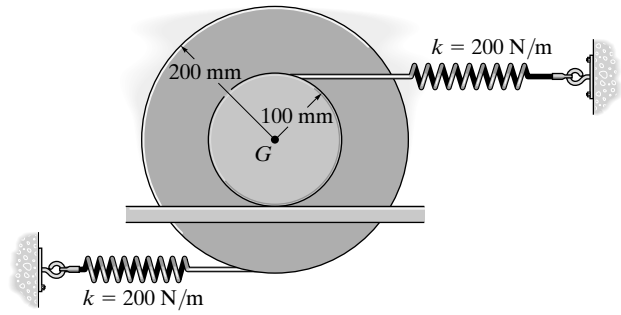

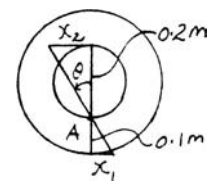

Energy Equation: Since the spool rolls without slipping, the stretching of both springs can be approximated as $x_1 = 0.1\theta$ and $x_2 = 0.2\theta$ when the spool is being displaced by a small angular displacement θ. Thus, the elastic potential energy is $V_p = \frac{1}{2}k\,x_1^2 + \frac{1}{2}k\,x_2^2 = \frac{1}{2}(200)(0.1\theta)^2 + \frac{1}{2}(200)\,(0.2\theta)^2 = 5\theta^2$. Thus,

$$V = V_e = 5\,\theta^2$$

The mass moment inertia of the spool about point A is $I_A = 15\left(0.125^2\right) + 15\left(0.1^2\right) = 0.384375\ \text{kg}\cdot\text{m}^2$. The kinetic energy is

$$T = \frac{1}{2}I_A\,\omega^2 = \frac{1}{2}(0.384375)\,\dot{\theta}^2 = 0.1921875\dot{\theta}^2$$

The total energy of the system is

$$U = T + V = 0.1921875\dot{\theta}^2 + 5\theta^2 \qquad \textbf{[1]}$$

Time Derivative: Taking the time derivative of Eq. [1], we have

$$0.384375\dot{\theta}\,\ddot{\theta} + 10\,\theta\,\dot{\theta} = 0$$

$$\dot{\theta}\,(0.384375\,\ddot{\theta} + 10\,\theta) = 0$$

Since $\dot{\theta} \neq 0$, then $0.384375\,\ddot{\theta} + 10\,\theta = 0$

$$\ddot{\theta} + 26.0\,\theta = 0 \qquad \textbf{Ans.}$$

© 2010 Pearson Education, Inc., Upper Saddle River, NJ. All rights reserved. This material is protected under all copyright laws as they currently exist. No portion of this material may be reproduced, in any form or by any means, without permission in writing from the publisher.

22–34. Determine the natural period of vibration of the disk having a mass m and radius r. Assume the disk does not slip on the surface of contact as it oscillates.

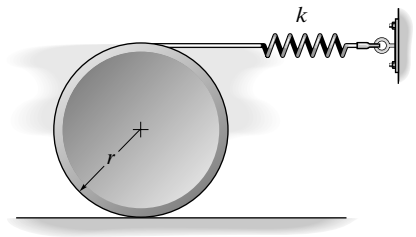

$$T + V = \text{const.}$$

$$s = (2r)\,\theta$$

$$T + V = \frac{1}{2}\left[\frac{1}{2}mr^2 + mr^2\right]\dot{\theta}^2 + \frac{1}{2}k(2r\,\theta)^2$$

$$0 = \frac{3}{2}mr^2\,\theta\dot{\theta} + 4\,kr^2\,\theta\dot{\theta}$$

$$\theta + \frac{8k}{3m}\theta = 0$$

$$\tau = \frac{2\,\pi}{p} = \frac{2\pi}{\sqrt{\dfrac{8k}{3m}}} = 3.85\sqrt{\frac{m}{k}}$$

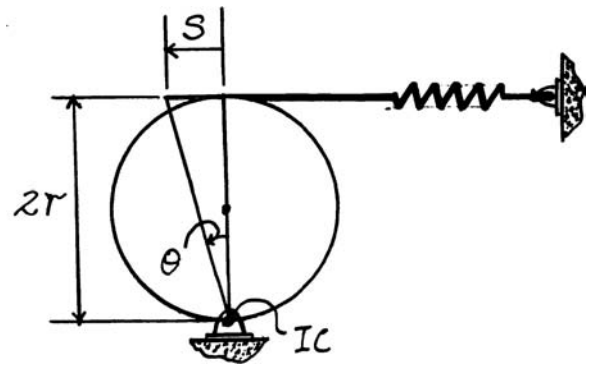

Ans.

22–35. If the wheel is given a small angular displacement of θ and released from rest, it is observed that it oscillates with a natural period of τ. Determine the wheel's radius of gyration about its center of mass G. The wheel has a mass of m and rolls on the rails without slipping.

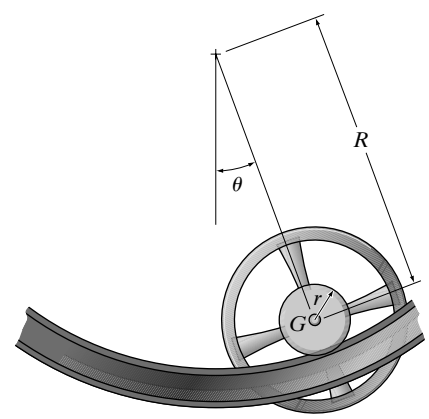

Potential and Kinetic Energy: With reference to the datum established in Fig. a, the gravitational potential energy of the wheel is

$$V = V_g = -Wy_G = -mgR\cos\theta$$

As shown in Fig. b, $v_G = \dot{\theta}R$. Also, $v_G = \omega r_{G/IC} = \omega r$. Then, $\omega r = \dot{\theta}R$ or $\omega = \left(\dfrac{R}{r}\right)\dot{\theta}$. The mass moment of inertia of the wheel about its mass center is $I_G = mk_G{}^2$. Thus, the kinetic energy of the wheel is

$$T = \frac{1}{2}mv_G{}^2 + \frac{1}{2}I_G\,\omega^2$$

$$= \frac{1}{2}m\left(\dot{\theta}R\right)^2 + \frac{1}{2}(mk_G^2)\left[\left(\frac{R}{r}\right)\dot{\theta}\right]^2$$

$$= \frac{1}{2}mR^2\left(\frac{r^2 + k_G{}^2}{r^2}\right)\dot{\theta}^2$$

The energy function of the wheel is

$$T + V = \text{constant}$$

$$\frac{1}{2}mR^2\left(\frac{r^2 + k_G{}^2}{r^2}\right)\dot{\theta}^2 - mgR\cos\theta = \text{constant}$$

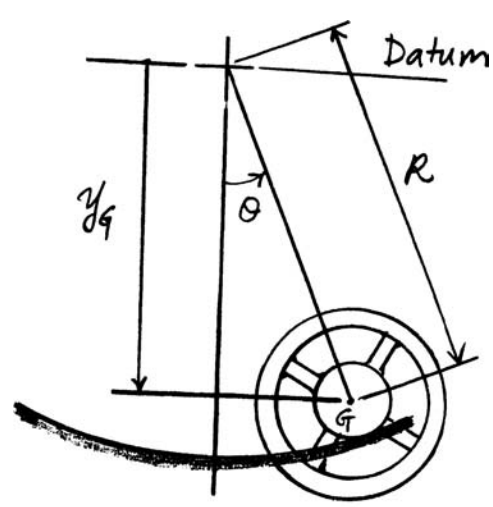

(a)

© 2010 Pearson Education, Inc., Upper Saddle River, NJ. All rights reserved. This material is protected under all copyright laws as they currently exist. No portion of this material may be reproduced, in any form or by any means, without permission in writing from the publisher.

Taking the time derivative of this equation,

$$mR^2\left(\frac{r^2 + k_G{}^2}{r^2}\right)\dot{\theta}\,\ddot{\theta} + mgR\sin\theta\dot{\theta} = 0$$

$$\dot{\theta}\left[mR^2\left(\frac{r^2 + k_G{}^2}{r^2}\right)\dot{\theta} + mgR\sin\theta\right] = 0$$

Since $\dot{\theta}$ is not always equal to zero, then

$$mR^2\left(\frac{r^2 + k_G{}^2}{r^2}\right)\ddot{\theta} + mgR\sin\theta = 0$$

$$\ddot{\theta} + \frac{g}{R}\left(\frac{r^2}{r^2 + k_G{}^2}\right)\sin\theta = 0$$

Since θ is small, $\sin\theta \cong \theta$. This equation becomes

$$\ddot{\theta} + \frac{g}{R}\left(\frac{r^2}{r^2 + k_G{}^2}\right)\theta = 0$$

Comparing this equation to that of the standard form, the natural circular frequency of the system is

$$\omega_n = \sqrt{\frac{g}{R}\left(\frac{r^2}{r^2 + k_G{}^2}\right)}$$

The natural period of the oscillation is therefore

$$\tau = \frac{2\pi}{\omega_n} = 2\pi\sqrt{\frac{R}{g}\left(\frac{r^2 + k_G{}^2}{r^2}\right)}$$

$$k_G = \frac{r}{2\pi}\sqrt{\frac{\tau^2 g - 4\pi^2 R}{R}} \qquad \textbf{Ans.}$$

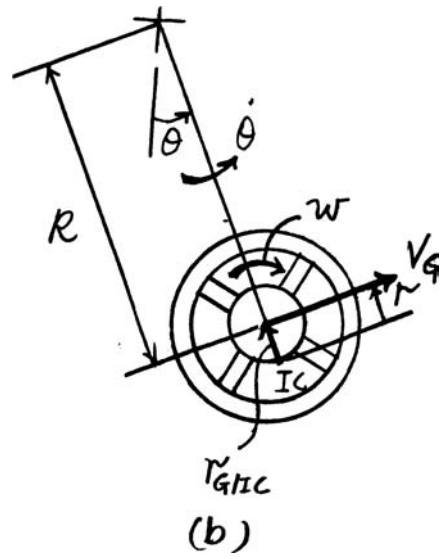

***22–36.** Without an adjustable screw, A, the 1.5-lb pendulum has a center of gravity at G. If it is required that it oscillates with a period of 1 s, determine the distance a from pin O to the screw. The pendulum's radius of gyration about O is $k_O = 8.5$ in. and the screw has a weight of 0.05 lb.

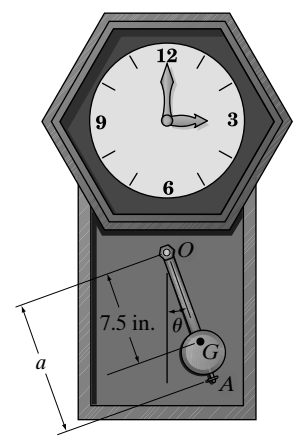

Potential and Kinetic Energy: With reference to the datum established in Fig. a, the gravitational potential energy of the system is

$$V = V_g = -W_P\,y_G - W_A\,y_A$$

$$= -1.5(0.625\cos\theta) - 0.05(a\cos\theta)$$

$$= -(0.9375 + 0.05\,a)\cos\theta$$

The mass moment of inertia of the pendulum about point O is $I_O = mk_O{}^2 = \frac{1.5}{32.2}\left(\frac{8.5}{12}\right)^2 = 0.02337\ \text{slug}\cdot\text{ft}^2$. Since the pendulum rotates about point O, $v_A = \dot{\theta}r_{OA} = \dot{\theta}a$. Thus, the kinetic energy of the system is

$$T = \frac{1}{2}I_O\,\dot{\theta}^2 + \frac{1}{2}m_A v_A{}^2$$

© 2010 Pearson Education, Inc., Upper Saddle River, NJ. All rights reserved. This material is protected under all copyright laws as they currently exist. No portion of this material may be reproduced, in any form or by any means, without permission in writing from the publisher.

***22–36. Continued**

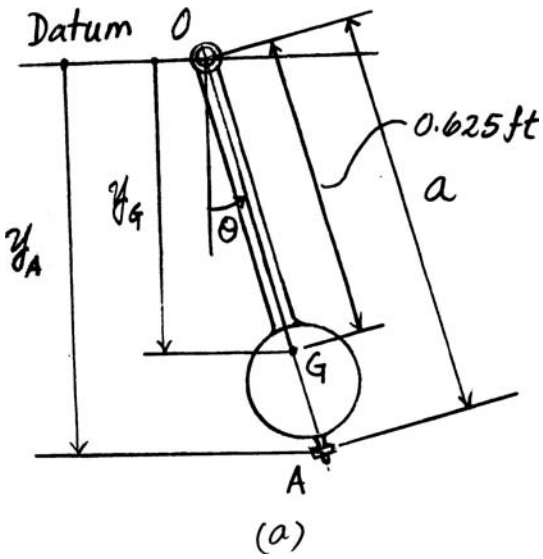

(a)

$$= \frac{1}{2}(0.02337)\dot{\theta}^2 + \frac{1}{2}\left(\frac{0.05}{32.2}\right)(\dot{\theta}a)^2$$

$$= \left(0.01169 + 0.0007764\,a^2\right)\dot{\theta}^2$$

Thus, the energy function of the system is

$$T + V = \text{constant}$$

$$\left(0.01169 + 0.0007764a^2\right)\dot{\theta}^2 - (0.9375 + 0.05a)\cos\theta = \text{constant}$$

Taking the time derivative of this equation,

$$\left(0.02337 + 0.001553a^2\right)\dot{\theta}\,\ddot{\theta} + (0.9375 + 0.05a)\sin\theta\,\dot{\theta} = 0$$

$$\dot{\theta}\left[\left(0.02337 + 0.001553\,a^2\right)\ddot{\theta} + (0.9375 + 0.05a)\sin\theta\right] = 0$$

Since θ is not always equal to zero, then

$$\left(0.02337 + 0.001553a^2\right)\ddot{\theta} + (0.9375 + 0.05a)\sin\theta = 0$$

$$\ddot{\theta} + \left(\frac{0.9375 + 0.05a}{0.02337 + 0.001553a^2}\right)\sin\theta = 0$$

Since θ is small, $\sin\theta \cong 0$. This equation becomes

$$\ddot{\theta} + \left(\frac{0.9375 + 0.05a}{0.02337 + 0.001553a^2}\right)\theta = 0$$

Comparing this equation to that of the standard form, the natural circular frequency of the system is

$$\omega_n = \sqrt{\frac{0.9375 + 0.05a}{0.02337 + 0.001553a^2}}$$

The natural period of the oscillation is therefore

$$\tau = \frac{2\pi}{\omega_n}$$

$$1 = 2\pi\sqrt{\frac{0.02337 + 0.001553a^2}{0.9375 + 0.05a}}$$

$$0.06130a^2 - 0.05a - 0.01478 = 0$$

Solving for the positive root,

$$a = 1.05 \text{ ft}$$ **Ans.**

© 2010 Pearson Education, Inc., Upper Saddle River, NJ. All rights reserved. This material is protected under all copyright laws as they currently exist. No portion of this material may be reproduced, in any form or by any means, without permission in writing from the publisher.

•22–37. A torsional spring of stiffness k is attached to a wheel that has a mass of M. If the wheel is given a small angular displacement of θ about the z axis determine the natural period of oscillation. The wheel has a radius of gyration about the z axis of k_z.

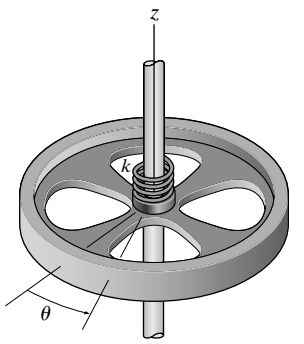

Potential and Kinetic Energy: The elastic potential energy of the system is

$$V = V_e = \frac{1}{2}k\theta^2$$

The mass moment of inertia of the wheel about the z axis is $I_z = Mk_z{}^2$. Thus, the kinetic energy of the wheel is

$$T_1 = \frac{1}{2}I_z\dot{\theta}^2 = \frac{1}{2}Mk_z{}^2\dot{\theta}^2$$

The energy function of the wheel is

$$T_1 + V = \text{constant}$$

$$\frac{1}{2}Mk_z{}^2\dot{\theta}^2 + \frac{1}{2}k\theta^2 = \text{constant}$$

Taking the time derivative of this equation,

$$Mk_z{}^2\dot{\theta}\,\ddot{\theta} + k\theta\dot{\theta} = 0$$

$$\dot{\theta}\left(Mk_z{}^2\ddot{\theta} + k\theta\right) = 0$$

Since $\dot{\theta}$ is not always equal to zero, then

$$Mk_z{}^2\ddot{\theta} + k\theta = 0$$

$$\ddot{\theta} + \frac{k}{Mk_z{}^2}\theta = 0$$

Comparing this equation to that of the standard form, the natural circular frequency of the system is

$$(\omega_n) = \sqrt{\frac{k}{Mk_z{}^2}}$$

The natural period of the oscillation is therefore

$$\tau = \frac{2\pi}{(\omega_n)_1}$$

$$\tau = 2\pi\sqrt{\frac{Mk_z{}^2}{k}} \qquad \textbf{Ans.}$$

© 2010 Pearson Education, Inc., Upper Saddle River, NJ. All rights reserved. This material is protected under all copyright laws as they currently exist. No portion of this material may be reproduced, in any form or by any means, without permission in writing from the publisher.

22–38. Determine the frequency of oscillation of the cylinder of mass m when it is pulled down slightly and released. Neglect the mass of the small pulley.

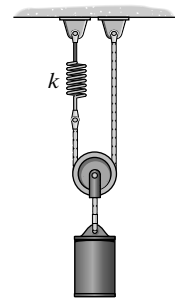

Potential and Kinetic Energy: Referring to the free-body diagram of the system at its equilibrium position, Fig. *a*,

$$+\uparrow \Sigma F_y = 0; \qquad 2(F_{sp})_{st} - mg = 0 \qquad (F_{sp})_{st} = \frac{mg}{2}$$

Thus, the initial stretch of the spring is $s_0 = \dfrac{(F_{sp})_{st}}{k} = \dfrac{mg}{2k}$. Referring to Fig. *b*,

$$(+\downarrow) \qquad s_C + (s_C - s_P) = l$$

$$2s_C - s_P = l$$

$$2\Delta s_C - \Delta s_P = 0$$

$$\Delta s_P = 2\Delta s_C$$

When the cylinder is displaced vertically downward a distance $\Delta s_C = y$, the spring is stretched further by $s_1 = \Delta s_P = 2y$.

Thus, the elastic potential energy of the spring is

$$V_e = \frac{1}{2}k(s_0 + s_1)^2 = \frac{1}{2}k\left(\frac{mg}{2k} + 2y\right)^2$$

With reference to the datum established in Fig. *b*, the gravitational potential energy of the cylinder is

$$V_g = -Wy = -mgy$$

The kinetic energy of the system is $T = \dfrac{1}{2}m\dot{y}^2$. Thus, the energy function of the system is

$$T + V = \text{constant}$$

$$\frac{1}{2}m\dot{y}^2 + \frac{1}{2}k\left(\frac{mg}{2k} + 2y\right)^2 - mgy = 0$$

Taking the time derivative of this equation,

$$m\dot{y}\,\ddot{y} + k\left(\frac{mg}{2k} + 2y\right)(2\dot{y}) - mg\dot{y} = 0$$

$$\dot{y}(m\ddot{y} + 4ky) = 0$$

Since $\dot{y}$ is not equal to zero,

$$m\ddot{y} + 4\,ky = 0$$

$$\ddot{y} + \frac{4k}{m}y = 0$$

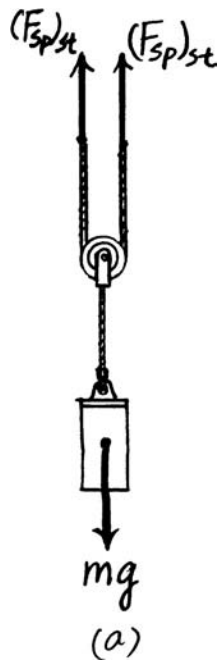

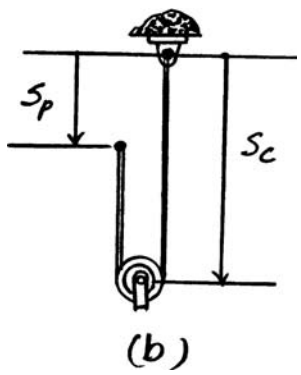

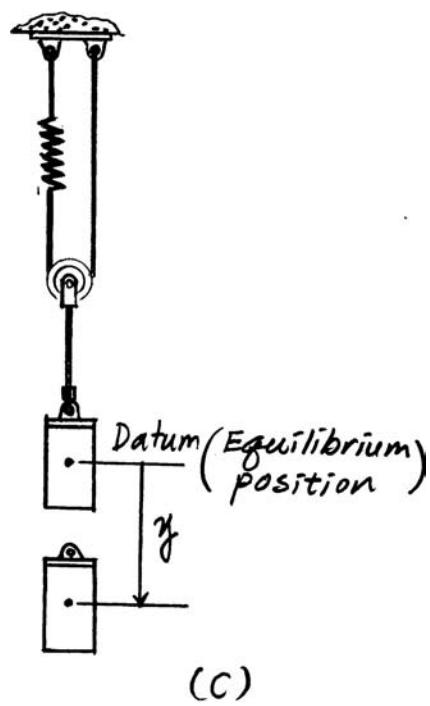

© 2010 Pearson Education, Inc., Upper Saddle River, NJ. All rights reserved. This material is protected under all copyright laws as they currently exist. No portion of this material may be reproduced, in any form or by any means, without permission in writing from the publisher.

Comparing this equation to that of the standard form, the natural circular frequency of the system is

$$\omega_n = \sqrt{\frac{4k}{m}} = 2\sqrt{\frac{k}{m}}$$

Thus, the frequency of the oscillation is

$$f = \frac{\omega_n}{2\pi} = \frac{1}{\pi}\sqrt{\frac{k}{m}} \qquad \textbf{Ans.}$$

22–39. Determine the frequency of oscillation of the cylinder of mass m when it is pulled down slightly and released. Neglect the mass of the small pulleys.

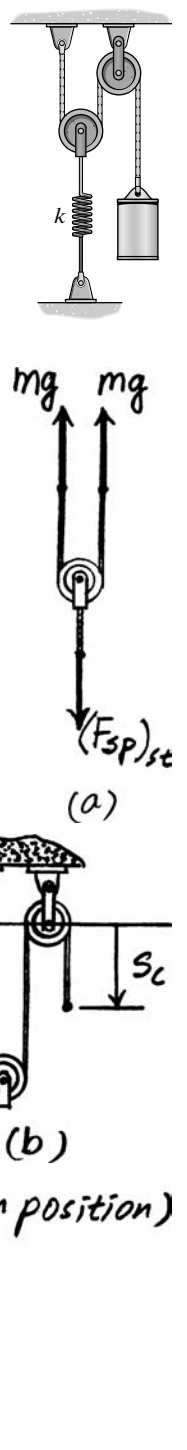

Potential and Kinetic Energy: Referring to the free-body diagram of the system at its equilibrium position, Fig. *a*,

$$+\uparrow \Sigma F_y = 0; \qquad 2mg - (F_{sp})_{st} = 0 \qquad (F_{sp})_{st} = 2mg$$

Thus, the initial stretch of the spring is $s_0 = \dfrac{(F_{sp})_{st}}{k} = \dfrac{2mg}{k}$. Referring to Fig. *b*,

$$(+\downarrow) \qquad 2s_P + s_C = l$$

$$2\Delta s_P - \Delta s_C = 0$$

$$\Delta s_P = -\frac{\Delta s_C}{2} = \frac{\Delta s_C}{2} \quad \uparrow$$

When the cylinder is displaced vertically downward a distance $\Delta s_C = y$, the spring stretches further by $s_1 = \Delta s_P = \dfrac{y}{2}$. Thus, the elastic potential energy of the spring is

$$V_e = \frac{1}{2}k(s_0 + s_1)^2 = \frac{1}{2}k\left(\frac{2mg}{k} + \frac{y}{2}\right)^2$$

With reference to the datum established in Fig. *c*, the gravitational potential energy of the cylinder is

$$V_g = -Wy = -mgy$$

The kinetic energy of the cylinder is $T = \dfrac{1}{2}m\dot{y}^2$. Thus, the energy function of the system is

$$T + V = \text{constant}$$

$$\frac{1}{2}m\dot{y}^2 + k\left(\frac{2mg}{2k} + \frac{y}{2}\right)^2 - mgy = \text{constant}$$

Taking the time derivative of this equation,

$$m\dot{y}\,\ddot{y} + k\left(\frac{2mg}{k} + \frac{y}{2}\right)\left(\frac{\dot{y}}{2}\right) - mg\,\dot{y} = 0$$

$$\dot{y}\left(m\ddot{y} + \frac{k}{4}y\right) = 0$$

© 2010 Pearson Education, Inc., Upper Saddle River, NJ. All rights reserved. This material is protected under all copyright laws as they currently exist. No portion of this material may be reproduced, in any form or by any means, without permission in writing from the publisher.

Since $\dot{y}$ is not always equal to zero,

$$m\ddot{y} + \frac{k}{4}y = 0$$

$$\ddot{y} + \frac{1}{4}\left(\frac{k}{m}\right)y = 0$$

Comparing this equation to that of the standard form, the natural circular frequency of the system is

$$\omega_n = \sqrt{\frac{1}{4}\left(\frac{k}{m}\right)} = \frac{1}{2}\sqrt{\frac{k}{m}}$$

Thus, the natural frequency of oscillation is

$$f_n = \frac{\omega_n}{2\pi} = \frac{1}{4\pi}\sqrt{\frac{k}{m}} \qquad \textbf{Ans.}$$

***22–40.** The gear of mass m has a radius of gyration about its center of mass O of k_O. The springs have stiffnesses of k_1 and k_2, respectively, and both springs are unstretched when the gear is in an equilibrium position. If the gear is given a small angular displacement of θ and released, determine its natural period of oscillation.

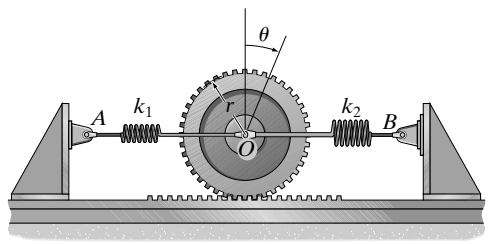

Potential and Kinetic Energy: Since the gear rolls on the gear rack, springs AO and BO stretch and compress $s_O = r_{O/IC}\theta = r\theta$. When the gear rotates a small angle θ, Fig. a, the elastic potential energy of the system is

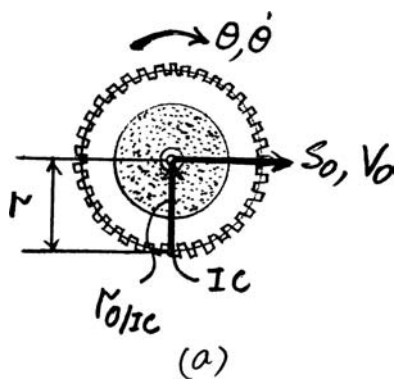

$$V = V_e = \frac{1}{2}k_1 s_O{}^2 + \frac{1}{2}k_2 s_O{}^2$$

$$= \frac{1}{2}k_1(r\theta)^2 + \frac{1}{2}k_2(r\theta)^2$$

$$= \frac{1}{2}r^2(k_1 + k_2)\theta^2$$

Also, from Fig. a, $v_O = \dot{\theta}r_{O/IC} = \dot{\theta}r$. The mass moment of inertia of the gear about its mass center is $I_O = mk_O{}^2$.

Thus, the kinetic energy of the system is

$$T = \frac{1}{2}mv_O{}^2 + \frac{1}{2}I_O\,\omega^2$$

$$= \frac{1}{2}m(\dot{\theta}r)^2 + \frac{1}{2}\left(mk_O{}^2\right)\dot{\theta}^2$$

$$= \frac{1}{2}m(r^2 + k_O{}^2)\dot{\theta}^2$$

© 2010 Pearson Education, Inc., Upper Saddle River, NJ. All rights reserved. This material is protected under all copyright laws as they currently exist. No portion of this material may be reproduced, in any form or by any means, without permission in writing from the publisher.

The energy function of the system is therefore

$$T + V = \text{constant}$$

$$\frac{1}{2}m\left(r^2 + k_O{}^2\right)\dot{\theta}^2 + \frac{1}{2}r^2(k_1 + k_2)\theta^2 = \text{constant}$$

Taking the time derivative of this equation,

$$m\left(r^2 + k_O{}^2\right)\dot{\theta}\,\ddot{\theta} + r^2(k_1 + k_2)\theta\dot{\theta} = 0$$

$$\dot{\theta}\left[m\left(r^2 + k_O{}^2\right)\ddot{\theta} + r^2(k_1 + k_2)\theta\right] = 0$$

Since $\dot{\theta}$ is not always equal to zero, then

$$m\left(r^2 + k_O{}^2\right)\ddot{\theta} + r^2(k_1 + k_2)\theta = 0$$

$$\ddot{\theta} + \frac{r^2(k_1 + k_2)}{m\left(r^2 + k_O{}^2\right)}\theta = 0$$

Comparing this equation to that of the standard form, the natural circular frequency of the system is

$$\omega_n = \sqrt{\frac{r^2(k_1 + k_2)}{m\left(r^2 + k_O{}^2\right)}}$$

Thus, the natural period of the oscillation is

$$\tau = \frac{2\pi}{\omega_n} = 2\pi\sqrt{\frac{m\left(r^2 + k_O{}^2\right)}{r^2(k_1 + k_2)}} \qquad \textbf{Ans.}$$

22–41. The bar has a mass of 8 kg and is suspended from two springs such that when it is in equilibrium, the springs make an angle of 45° with the horizontal as shown. Determine the natural period of vibration if the bar is pulled down a short distance and released. Each spring has a stiffness of $k = 40$ N/m.

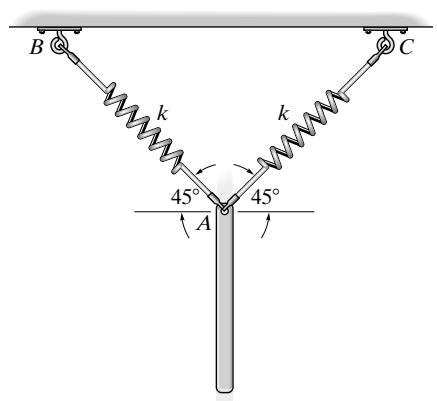

$$E = 2(\frac{1}{2})k(s_{eq} + y\sin\theta)^2 - mgy + \frac{1}{2}m\dot{y}^2$$

$$\dot{E} = 2k(s_{eq} + y\sin\theta)\dot{y}\sin\theta - mg\dot{y} + m\dot{y}\,\ddot{y} = 0$$

$$2k(\frac{mg}{2k\sin\theta} + y\sin\theta)\sin\theta - mg + m\ddot{y} = 0$$

$$2ky\sin^2\theta + m\ddot{y} = 0$$

$$\ddot{y} + \frac{2k\sin^2\theta}{m}y = 0$$

$$\tau = \frac{2\pi}{\omega_n} = \frac{2\pi}{\sin\theta}\sqrt{\frac{m}{2k}} = \frac{2\pi}{\sin 45°}\sqrt{\frac{8}{2(40)}}$$

$$\tau = 2.81 \text{ s} \qquad \textbf{Ans.}$$

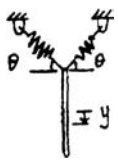

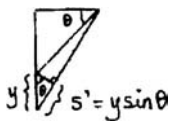

© 2010 Pearson Education, Inc., Upper Saddle River, NJ. All rights reserved. This material is protected under all copyright laws as they currently exist. No portion of this material may be reproduced, in any form or by any means, without permission in writing from the publisher.

22–42. If the block-and-spring model is subjected to the periodic force $F = F_0 \cos \omega t$, show that the differential equation of motion is $\ddot{x} + (k/m)x = (F_0/m) \cos \omega t$, where x is measured from the equilibrium position of the block. What is the general solution of this equation?

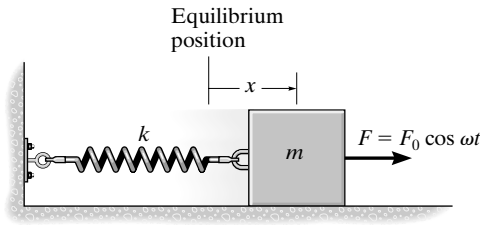

$\xrightarrow{+} \Sigma F_x = ma_x; \qquad F_0 \cos \omega t - kx = m\ddot{x}$

$$\ddot{x} + \frac{k}{m}x = \frac{F_0}{m} \cos \omega t \qquad \textbf{(Q.E.D.)}$$

$$\ddot{x} + p^2 x = \frac{F_0}{m} \cos \omega t \qquad \text{Where } p = \sqrt{\frac{k}{m}} \qquad \textbf{(1)}$$

The general solution of the above differential equation is of the form of $x = x_c + x_p$.

The complementary solution:

$x_c = A \sin pt + B \cos pt$

The particular solution:

$s_p = .C \cos \omega t$ **(2)**

$\ddot{x}_P = -C\omega^2 \cos \omega t$ **(3)**

Substitute Eqs. (2) and (3) into (1) yields:

$$-C\omega^2 \cos \omega t + p^2 (C \cos \omega t) = \frac{F_0}{m} \cos \omega t$$

$$C = \frac{\frac{F_0}{m}}{p^2 - \omega^2} = \frac{F_0/k}{1 - \left(\frac{\omega}{p}\right)^2}$$

The general solution is therefore

$$s = A \sin pt + B \cos pt + \frac{F_0/k}{1 - \left(\frac{\omega}{p}\right)^2} \cos \omega t \qquad \textbf{Ans.}$$

The constants A and B can be found from the initial conditions.

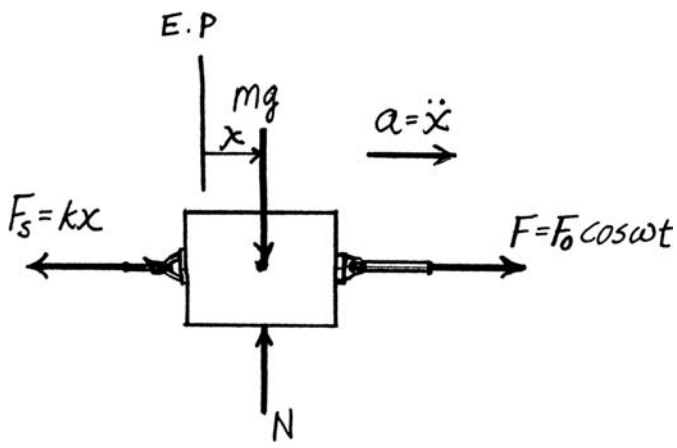

© 2010 Pearson Education, Inc., Upper Saddle River, NJ. All rights reserved. This material is protected under all copyright laws as they currently exist. No portion of this material may be reproduced, in any form or by any means, without permission in writing from the publisher.

22–43. If the block is subjected to the periodic force $F = F_0 \cos \omega t$, show that the differential equation of motion is $\ddot{y} + (k/m)y = (F_0/m) \cos \omega t$, where y is measured from the equilibrium position of the block. What is the general solution of this equation?

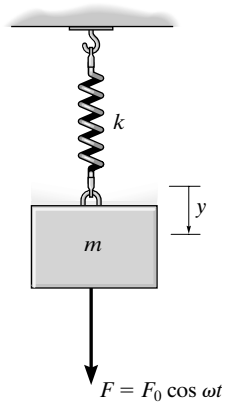

$$+\downarrow \Sigma F_y = ma_y; \qquad F_0 \cos \omega t + W - k\delta_{st} - ky = m\ddot{y}$$

Since $W = k\delta_{st}$,

$$\ddot{y} + \left(\frac{k}{m}\right)y = \frac{F_0}{m} \cos \omega t \qquad \textbf{(1) (Q.E.D.)}$$

$$y_c = A \sin py + B \cos py \qquad \text{(complementary solution)}$$

$$y_p = C \cos \omega t \qquad \text{(particular solution)}$$

Substitute y_p into Eq. (1).

$$C\left(-\omega^2 + \frac{k}{m}\right)\cos \omega t = \frac{F_0}{m} \cos \omega t$$

$$C = \frac{\dfrac{F_0}{m}}{\left(\dfrac{k}{m} - \omega^2\right)}$$

$$y = y_c + y_p$$

$$y = A \sin pt + B \cos pt + \left(\frac{F_0}{(k - m\omega^2)}\right)\cos \omega t \qquad \textbf{Ans.}$$

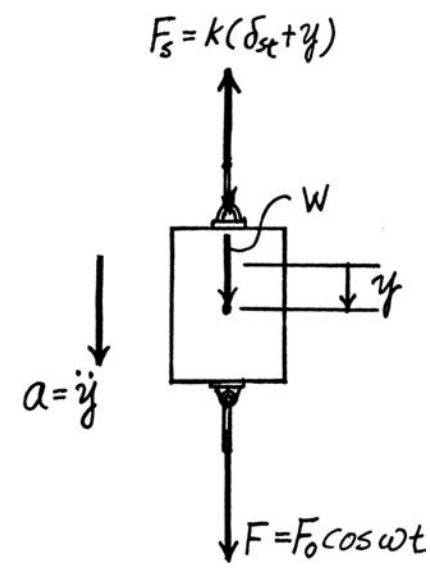

***22–44.** A block having a mass of 0.8 kg is suspended from a spring having a stiffness of 120 N/m. If a dashpot provides a damping force of 2.5 N when the speed of the block is 0.2 m/s, determine the period of free vibration.

$$F = cv \qquad c = \frac{F}{v} = \frac{2.5}{0.2} = 12.5 \text{ N} \cdot \text{s/m}$$

$$p = \sqrt{\frac{k}{m}} = \sqrt{\frac{120}{0.8}} = 12.247 \text{ rad/s}$$

$$C_c = 2mp = 2(0.8)(12.247) = 19.60 \text{ N} \cdot \text{s/m}$$

$$p_d = p\sqrt{1 - \left(\frac{c}{c_c}\right)^2} = 12.247\sqrt{1 - \left(\frac{12.5}{19.6}\right)^2} = 9.432 \text{ rad/s}$$

$$\tau_d = \frac{2\pi}{p_d} = \frac{2\pi}{9.432} = 0.666 \text{ s} \qquad \textbf{Ans.}$$

© 2010 Pearson Education, Inc., Upper Saddle River, NJ. All rights reserved. This material is protected under all copyright laws as they currently exist. No portion of this material may be reproduced, in any form or by any means, without permission in writing from the publisher.

•22–45. The spring shown stretches 6 in. when it is loaded with a 50-lb weight. Determine the equation which describes the position of the weight as a function of time if the weight is pulled 4 in. below its equilibrium position and released from rest at $t = 0$. The weight is subjected to the periodic force of $F = (-7 \sin 2t)$ lb, where t is in seconds.

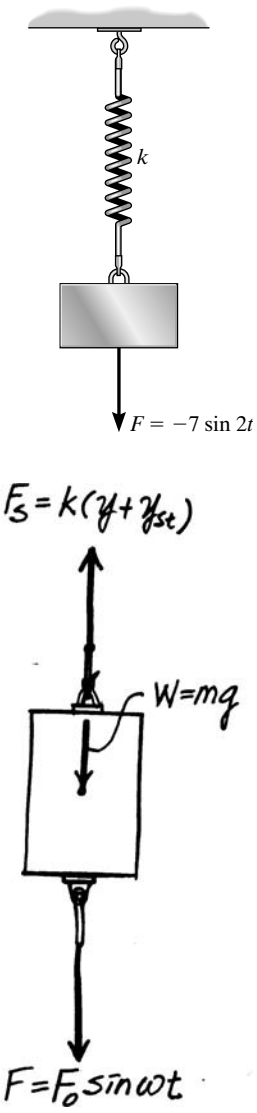

$$+\uparrow \Sigma F_y = ma_y; \qquad k(y_{st} + y) - mg - F_O \sin \omega t = -m\ddot{y}$$

$$m\ddot{y} + ky + ky_{st} - mg = F_O \sin \omega t$$

However, from equilibrium $ky_{st} - mg = 0$, therefore

$$m\ddot{y} + ky = F_O \sin \omega t$$

$$\ddot{y} + \frac{k}{m} y = \frac{F_O}{m} \sin \omega t \qquad \text{where } p = \sqrt{\frac{k}{m}}$$

$$\ddot{y} + p^2 y = \frac{F_O}{m} \sin \omega t$$

From the text, the general solution of the above differential equation is

$$y = A \sin pt + B \cos pt + \frac{F_O/k}{1 - \left(\frac{\omega}{p}\right)^2} \sin \omega t$$

$$v = \dot{y} = Ap \cos pt - Bp \sin pt + \frac{(F_O/k)\omega}{1 - \left(\frac{\omega}{p}\right)^2} \cos \omega t$$

The initial condition when $t = 0$, $y = y_0$ and $v = v_0$.

$$y_0 = 0 + B + 0 \qquad B = y_0$$

$$v_0 = Ap - 0 + \frac{(F_O/k)\omega}{1 - \left(\frac{\omega}{p}\right)^2} \qquad A = \frac{v_0}{p} - \frac{(F_O/k)\omega}{p - \frac{\omega^2}{p}}$$

The solution is therefore

$$y = \left(\frac{v_0}{p} - \frac{(F_O/k)\omega}{p - \frac{\omega^2}{p}}\right) \sin pt + y_0 \cos pt + \frac{F_O/k}{1 - \left(\frac{\omega}{p}\right)^2} \sin \omega t$$

For this problem:

$$k = \frac{50}{6/12} = 100 \text{ lb/ft} \qquad p = \sqrt{\frac{k}{m}} = \sqrt{\frac{100}{50/32.2}} = 8.025 \text{ rad/s}$$

$$\frac{F_O/k}{1 - \left(\frac{\omega}{p}\right)^2} = \frac{-7/100}{1 - \left(\frac{2}{8.025}\right)^2} = -0.0746 \qquad y_0 = 0.333$$

$$\frac{v_0}{p} - \frac{(F_O/k)\omega}{p - \frac{\omega^2}{p}} = 0 - \frac{(-7/100)2}{8.025 - \frac{2^2}{8.025}} = 0.0186$$

$$y = (0.0186 \sin 8.02t + 0.333 \cos 8.02t - 0.0746 \sin 2t) \text{ ft} \qquad \textbf{Ans.}$$

© 2010 Pearson Education, Inc., Upper Saddle River, NJ. All rights reserved. This material is protected under all copyright laws as they currently exist. No portion of this material may be reproduced, in any form or by any means, without permission in writing from the publisher.

22–46. The 30-lb block is attached to two springs having a stiffness of 10 lb/ft. A periodic force $F = (8 \cos 3t)$ lb, where t is in seconds, is applied to the block. Determine the maximum speed of the block after frictional forces cause the free vibrations to dampen out.

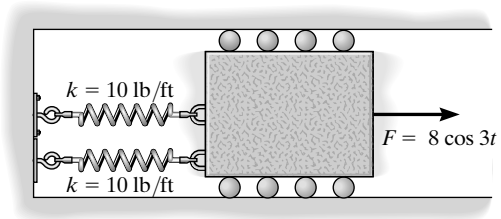

Free-body Diagram: When the block is being displaced by amount x to the right, the *restoring force* that develops in both springs is $F_{sp} = kx = 10x$.

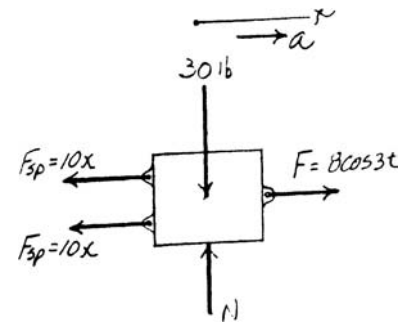

Equation of Motion:

$$\xrightarrow{+} \Sigma F_x = 0; \qquad -2(10x) + 8 \cos 3t = \frac{30}{32.2} a$$

$$a + 21.47x = 8.587 \cos 3t \qquad \textbf{[1]}$$

Kinematics: Since $a = \dfrac{d^2x}{dt^2} = \ddot{x}$, then substituting this value into Eq. [1], we have

$$\ddot{x} + 21.47x = 8.587 \cos 3t \qquad \textbf{[2]}$$

Since the friction will eventually dampen out the free vibration, we are only interested in the *particular solution* of the above differential equation which is in the form of

$$x_p = C \cos 3t$$

Taking second time derivative and substituting into Eq. [2], we have

$$-9C \cos 3t + 21.47C \cos 3t = 8.587 \cos 3t$$

$$C = 0.6888 \text{ ft}$$

Thus,

$$x_p = 0.6888 \cos 3t \qquad \textbf{[3]}$$

Taking the time derivative of Eq. [3], we have

$$v_p = \dot{x}_p = -2.0663 \sin 3t$$

Thus,

$$(v_p)_{max} = 2.07 \text{ ft/s} \qquad \textbf{Ans.}$$

© 2010 Pearson Education, Inc., Upper Saddle River, NJ. All rights reserved. This material is protected under all copyright laws as they currently exist. No portion of this material may be reproduced, in any form or by any means, without permission in writing from the publisher.

22–47. A 5-kg block is suspended from a spring having a stiffness of 300 N/m. If the block is acted upon by a vertical periodic force $F = (7 \sin 8t)$ N, where t is in seconds, determine the equation which describes the motion of the block when it is pulled down 100 mm from the equilibrium position and released from rest at $t = 0$. Consider positive displacement to be downward.

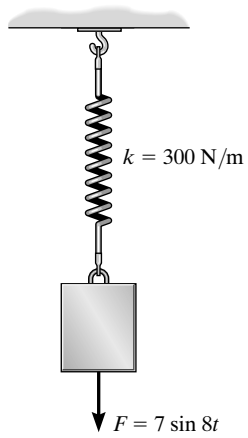

The general solution is defined by:

$$v = A \sin pt + B \cos pt + \left(\frac{\frac{F_0}{k}}{1 - \left(\frac{\omega}{p}\right)^2} \right) \sin \omega t$$

Since

$$F = 7 \sin 8t, \qquad F_0 = 7 \text{ N} \qquad \omega = 8 \text{ rad/s}, \qquad k = 300 \text{ N/m}$$

$$p = \sqrt{\frac{k}{m}} = \sqrt{\frac{300}{5}} = 7.746 \text{ rad/s}$$

Thus,

$$y = A \sin 7.746t + B \cos 7.746t + \left(\frac{\frac{7}{300}}{1 - \left(\frac{8}{7.746}\right)^2} \right) \sin 8t$$

$$y = 0.1 \text{ m when } t = 0,$$

$$0.1 = 0 + B - 0; \qquad B = 0.1 \text{ m}$$

$$v = A(7.746) \cos 7.746 - B(7.746) \sin 7.746t - (0.35)(8) \cos 8t$$

$$v = y = 0 \text{ when } t = 0,$$

$$v = A(7.746) - 2.8 = 0; \qquad A = 0.361$$

Expressing the results in mm, we have

$$y = (361 \sin 7.75t + 100 \cos 7.75t - 350 \sin 8t) \text{ mm} \qquad \textbf{Ans.}$$

***22–48.** The electric motor has a mass of 50 kg and is supported by *four springs,* each spring having a stiffness of 100 N/m. If the motor turns a disk D which is mounted eccentrically, 20 mm from the disk's center, determine the angular velocity ω at which resonance occurs. Assume that the motor only vibrates in the vertical direction.

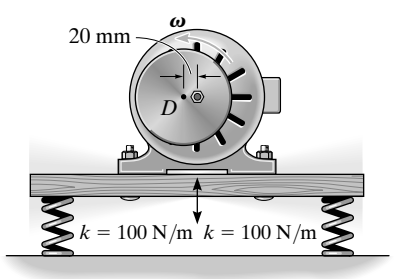

$$\omega_n = \sqrt{\frac{k}{m}} = \sqrt{\frac{4(100)}{50}} = 2.83 \text{ rad/s}$$

$$\omega_n = \omega = 2.83 \text{ rad/s} \qquad \textbf{Ans.}$$

© 2010 Pearson Education, Inc., Upper Saddle River, NJ. All rights reserved. This material is protected under all copyright laws as they currently exist. No portion of this material may be reproduced, in any form or by any means, without permission in writing from the publisher.

•22–49. The fan has a mass of 25 kg and is fixed to the end of a horizontal beam that has a negligible mass. The fan blade is mounted eccentrically on the shaft such that it is equivalent to an unbalanced 3.5-kg mass located 100 mm from the axis of rotation. If the static deflection of the beam is 50 mm as a result of the weight of the fan, determine the angular velocity of the fan blade at which resonance will occur. *Hint:* See the first part of Example 22.8.

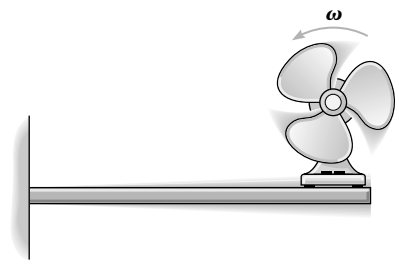

$$k = \frac{F}{\Delta y} = \frac{25(9.81)}{0.05} = 4905 \text{ N/m}$$

$$p = \sqrt{\frac{k}{m}} = \sqrt{\frac{4905}{25}} = 14.01 \text{ rad/s}$$

Resonance occurs when

$$\omega = p = 14.0 \text{ rad/s}$$ **Ans.**

22–50. The fan has a mass of 25 kg and is fixed to the end of a horizontal beam that has a negligible mass. The fan blade is mounted eccentrically on the shaft such that it is equivalent to an unbalanced 3.5-kg mass located 100 mm from the axis of rotation. If the static deflection of the beam is 50 mm as a result of the weight of the fan, determine the amplitude of steady-state vibration of the fan if the angular velocity of the fan blade is 10 rad/s. *Hint:* See the first part of Example 22.8.

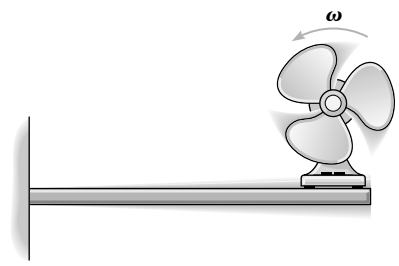

$$k = \frac{F}{\Delta y} = \frac{25(9.81)}{0.05} = 4905 \text{ N/m}$$

$$p = \sqrt{\frac{k}{m}} = \sqrt{\frac{4905}{25}} = 14.01 \text{ rad/s}$$

The force caused by the unbalanced rotor is

$$F_0 = mr\,\omega^2 = 3.5(0.1)(10)^2 = 35 \text{ N}$$

Using Eq. 22–22, the amplitude is

$$(x_p)_{\max} = \left| \frac{\frac{F_0}{k}}{1 - (\frac{\omega}{p})^2} \right|$$

$$(x_p)_{\max} = \left| \frac{\frac{35}{4905}}{1 - (\frac{10}{14.01})^2} \right| = 0.0146 \text{ m}$$

$$(x_p)_{\max} = 14.6 \text{ mm}$$ **Ans.**

© 2010 Pearson Education, Inc., Upper Saddle River, NJ. All rights reserved. This material is protected under all copyright laws as they currently exist. No portion of this material may be reproduced, in any form or by any means, without permission in writing from the publisher.

22–51. What will be the amplitude of steady-state vibration of the fan in Prob. 22–50 if the angular velocity of the fan blade is 18 rad/s? *Hint:* See the first part of Example 22.8.

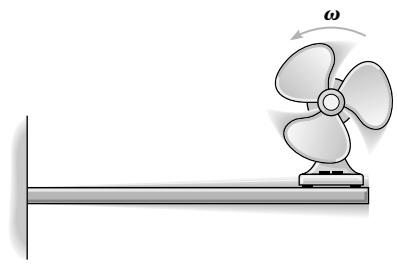

$$k = \frac{F}{\Delta y} = \frac{25(9.81)}{0.05} = 4905 \text{ N/m}$$

$$p = \sqrt{\frac{k}{m}} = \sqrt{\frac{4905}{25}} = 14.01 \text{ rad/s}$$

The force caused by the unbalanced rotor is

$$F_0 = mr\omega^2 = 3.5(0.1)(18)^2 = 113.4 \text{ N}$$

Using Eq. 22–22, the amplitude is

$$(x_p)_{\max} = \left| \frac{\dfrac{F_0}{k}}{1 - \left(\dfrac{\omega}{p}\right)^2} \right|$$

$$(x_p)_{\max} = \left| \frac{\dfrac{113.4}{4905}}{1 - \left(\dfrac{18}{14.01}\right)^2} \right| = 0.0355 \text{ m}$$

$$(x_p)_{\max} = 35.5 \text{ mm}$$ **Ans.**

***22–52.** A 7-lb block is suspended from a spring having a stiffness of $k = 75$ lb/ft. The support to which the spring is attached is given simple harmonic motion which can be expressed as $\delta = (0.15 \sin 2t)$ ft, where t is in seconds. If the damping factor is $c/c_c = 0.8$, determine the phase angle ϕ of forced vibration.

$$p = \sqrt{\frac{k}{m}} = \sqrt{\frac{75}{\left(\dfrac{7}{32.2}\right)}} = 18.57$$

$$\delta = 0.15 \sin 2t$$

$$\delta_0 = 0.15, \omega = 2$$

$$\phi' = \tan^{-1}\left(\frac{2\left(\dfrac{c}{c_c}\right)\left(\dfrac{\omega}{p}\right)}{1 - \left(\dfrac{\omega}{p}\right)^2}\right) = \tan^{-1}\left(\frac{2(0.8)\left(\dfrac{2}{18.57}\right)}{1 - \left(\dfrac{2}{18.57}\right)^2}\right)$$

$$\phi' = 9.89°$$ **Ans.**

© 2010 Pearson Education, Inc., Upper Saddle River, NJ. All rights reserved. This material is protected under all copyright laws as they currently exist. No portion of this material may be reproduced, in any form or by any means, without permission in writing from the publisher.

•22–53. Determine the magnification factor of the block, spring, and dashpot combination in Prob. 22–52.

$$p = \sqrt{\frac{k}{m}} = \sqrt{\frac{75}{\left(\frac{7}{32.2}\right)}} = 18.57$$

$$\delta = 0.15 \sin 2t$$

$$\delta_0 = 0.15, \omega = 2$$

$$\text{MF} = \frac{1}{\sqrt{\left[1 - \left(\frac{\omega}{p}\right)^2\right]^2 + \left[2\left(\frac{c}{c_c}\right)\left(\frac{\omega}{p}\right)\right]^2}} = \frac{1}{\sqrt{\left[1 - \left(\frac{2}{18.57}\right)^2\right]^2 + \left[2(0.8)\left(\frac{2}{18.57}\right)\right]^2}}$$

$$\text{MF} = 0.997$$ **Ans.**

© 2010 Pearson Education, Inc., Upper Saddle River, NJ. All rights reserved. This material is protected under all copyright laws as they currently exist. No portion of this material may be reproduced, in any form or by any means, without permission in writing from the publisher.

22–54. The uniform rod has a mass of m. If it is acted upon by a periodic force of $F = F_0 \sin \omega t$, determine the amplitude of the steady-state vibration.

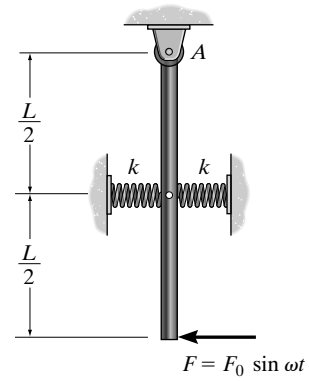

Equation of Motion: When the rod rotates through a small angle θ, the springs compress and stretch $s = r_{AG}\theta = \frac{L}{2}\theta$. Thus, the force in each spring is $F_{sp} = ks = \frac{kL}{2}\theta$. The mass moment of inertia of the rod about point A is $I_A = \frac{1}{3}mL^2$. Referring to the free-body diagram of the rod shown in Fig. a,

$$+\Sigma M_A = I_A\alpha; \qquad F_O \sin \omega t \cos \theta(L) - mg \sin \theta\left(\frac{L}{2}\right) - 2\left(\frac{kL}{2}\theta\right)\cos \theta\left(\frac{L}{2}\right)$$

$$= \frac{1}{3}mL^2\ddot{\theta}$$

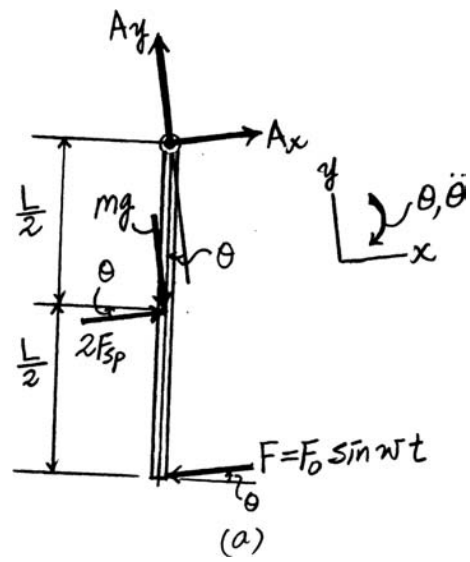

Since θ is small, $\sin \theta \cong 0$ and $\cos \theta \cong 1$. Thus, this equation becomes

$$\frac{1}{3}mL\ddot{\theta} + \frac{1}{2}(mg + kL)\theta = F_O \sin \omega t$$

$$\ddot{\theta} + \frac{3}{2}\left(\frac{g}{L} + \frac{k}{m}\right)\theta = \frac{3F_O}{mL}\sin \omega t \qquad \textbf{(1)}$$

The particular solution of this differential equation is assumed to be in the form of

$$\theta_p = C \sin \omega t \qquad \textbf{(2)}$$

Taking the time derivative of Eq. (2) twice,

$$\ddot{\theta}_p = -C\omega^2 \sin \omega t \qquad \textbf{(3)}$$

Substituting Eqs. (2) and (3) into Eq. (1),

$$-C\omega^2 \sin \omega t + \frac{3}{2}\left(\frac{g}{L} + \frac{k}{m}\right)(C \sin \omega t) = \frac{3F_O}{mL}\sin \omega t$$

$$C\left[\frac{3}{2}\left(\frac{g}{L} + \frac{k}{m}\right) - \omega^2\right]\sin \omega t = \frac{3F_O}{mL}\sin \omega t$$

$$C = \frac{3F_O/mL}{\frac{3}{2}\left(\frac{g}{L} + \frac{k}{m}\right) - \omega^2}$$

$$C = \frac{3F_O}{\frac{3}{2}(mg + Lk) - mL\omega^2} \qquad \textbf{Ans.}$$

© 2010 Pearson Education, Inc., Upper Saddle River, NJ. All rights reserved. This material is protected under all copyright laws as they currently exist. No portion of this material may be reproduced, in any form or by any means, without permission in writing from the publisher.

22–55. The motion of an underdamped system can be described by the graph in Fig. 20–16. Show that the relation between two successive peaks of vibration is given by $\ln(x_n/x_{n+1}) = 2\pi(c/c_c)/\sqrt{1-(c/c_c)^2}$, where c/c_c is the *damping factor* and $\ln(x_n/x_{n+1})$ is called the *logarithmic decrement*.

If the first peak occurs when $t_n = t$, then the successive peaks occur when $t_{n+1} = l + \tau_d = t + \dfrac{2\pi}{\omega_d} = t + \dfrac{2\pi}{\omega_n\sqrt{1-(c/c_c)^2}}$.

Thus, the two successive peaks are

$$y_n = De^{-((c/c_c)\omega_n)}$$

and

$$y_{n+1} = De^{-\left[(c/c_c)\omega_n\left(t+\frac{2\pi}{\omega_n\sqrt{1-(c/c_c)^2}}\right)\right]}$$

$$= De^{-((c/c_c)\omega_n)t}\, e^{-\frac{2\pi(c/c_c)}{\sqrt{1-(c/c_c)^2}}}$$

Thus,

$$\frac{y_n}{y_n+1} = e^{\left(\frac{2\pi(c/c_c)}{\sqrt{1-(c/c_c)^2}}\right)}$$

$$\ln\left(\frac{y_n}{y_n+1}\right) = \frac{2\pi(c/c_c)}{\sqrt{1-(c/c_c)^2}} \qquad \textbf{(Q.E.D.)}$$

© 2010 Pearson Education, Inc., Upper Saddle River, NJ. All rights reserved. This material is protected under all copyright laws as they currently exist. No portion of this material may be reproduced, in any form or by any means, without permission in writing from the publisher.

***22–56.** Two successive amplitudes of a spring-block underdamped vibrating system are observed to be 100 mm and 75 mm. Determine the damping coefficient of the system. The block has a mass of 10 kg and the spring has a stiffness of $k = 1000$ N/m. Use the result of Prob. 22–55.

Using the result of Prob. 22-55,

$$\ln\left(\frac{y_n}{y_n + 1}\right) = \frac{2\pi(c/c_c)}{\sqrt{1-(c/c_c)^2}}$$

$$\ln\left(\frac{100}{75}\right) = \frac{2\pi(c/c_c)}{\sqrt{1-(c/c_c)^2}}$$

$$\frac{c}{c_c} = 0.04574$$

However,

$$c_c = 2m\omega_n = 2(10)\sqrt{\frac{1000}{10}} = 200\ \text{N}\cdot\text{s/m}$$

Thus,

$$\frac{c}{200} = 0.04574$$

$$c = 9.15\ \text{N}\cdot\text{s/m} \qquad \textbf{Ans.}$$

•22–57. Two identical dashpots are arranged parallel to each other, as shown. Show that if the damping coefficient $c < \sqrt{mk}$, then the block of mass m will vibrate as an underdamped system.

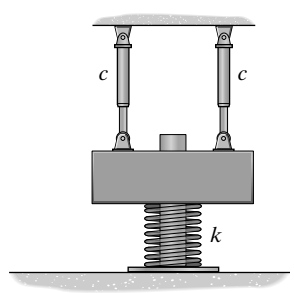

When the two dash pots are arranged in parallel, the piston of the dashpots have the same velocity. Thus, the force produced is

$$F = c\dot{y} + c\dot{y} = 2c\dot{y}$$

The equivalent damping coefficient c_{eq} of a single dashpot is

$$c_{eq} = \frac{F}{\dot{y}} = \frac{2c\dot{y}}{\dot{y}} = 2c$$

For the vibration to occur (underdamped system), $c_{eq} < c_c$. However, $c_c = 2m\omega_n = 2m\sqrt{\frac{k}{m}}$. Thus,

$$c_{eq} < c_c$$

$$2c < 2m\sqrt{\frac{k}{m}}$$

$$c < \sqrt{mk} \qquad \textbf{Ans.}$$

© 2010 Pearson Education, Inc., Upper Saddle River, NJ. All rights reserved. This material is protected under all copyright laws as they currently exist. No portion of this material may be reproduced, in any form or by any means, without permission in writing from the publisher.

22–58. The spring system is connected to a crosshead that oscillates vertically when the wheel rotates with a constant angular velocity of $\boldsymbol{\omega}$. If the amplitude of the steady-state vibration is observed to be 400 mm, and the springs each have a stiffness of $k = 2500\ \text{N/m}$, determine the two possible values of $\boldsymbol{\omega}$ at which the wheel must rotate. The block has a mass of 50 kg.

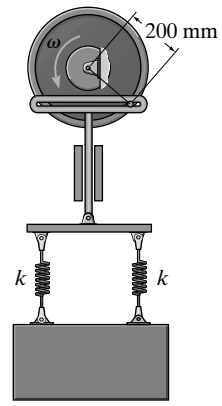

In this case, $k_{eq} = 2k = 2(2500) = 5000\ \text{N/m}$ Thus, the natural circular frequency of the system is

$$\omega_n = \sqrt{\frac{k_{eq}}{m}} = \sqrt{\frac{5000}{50}} = 10\ \text{rad/s}$$

Here, $\delta_O = 0.2\ \text{m}$ and $(Y_P)_{\max} = \pm 0.4\ \text{m}$, so that

$$(Y_P)_{\max} = \frac{\delta_O}{1 - \left(\dfrac{\omega}{\omega_n}\right)^2}$$

$$\pm 0.4 = \frac{0.2}{1 - \left(\dfrac{\omega}{10}\right)^2}$$

$$\frac{\omega^2}{100} = 1 \pm 0.5$$

Thus,

$$\frac{\omega^2}{100} = 1.5 \qquad \omega = 12.2\ \text{rad/s} \qquad \textbf{Ans.}$$

or

$$\frac{\omega^2}{100} = 0.5 \qquad \omega = 7.07\ \text{rad/s} \qquad \textbf{Ans.}$$

© 2010 Pearson Education, Inc., Upper Saddle River, NJ. All rights reserved. This material is protected under all copyright laws as they currently exist. No portion of this material may be reproduced, in any form or by any means, without permission in writing from the publisher.

22–59. The spring system is connected to a crosshead that oscillates vertically when the wheel rotates with a constant angular velocity of $\omega = 5$ rad/s. If the amplitude of the steady-state vibration is observed to be 400 mm, determine the two possible values of the stiffness k of the springs. The block has a mass of 50 kg.

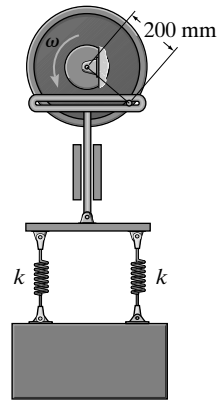

In this case, $k_{eq} = 2k$ Thus, the natural circular frequency of the system is

$$\omega_n = \sqrt{\frac{k_{eq}}{m}} = \sqrt{\frac{2k}{50}} = \sqrt{0.04k}$$

Here, $\delta_O = 0.2$ m and $(Y_P)_{\max} = \pm 0.4$ m, so that

$$(Y_P)_{\max} = \frac{\delta_O}{1 - \left(\frac{\omega}{\omega_n}\right)^2}$$

$$\pm 0.4 = \frac{0.2}{1 - \left(\frac{5}{\sqrt{0.04k}}\right)^2}$$

$$\frac{625}{k} = 1 \pm 0.5$$

Thus,

$$\frac{625}{k} = 1.5 \qquad k = 417 \text{ N/m} \qquad \textbf{Ans.}$$

or

$$\frac{625}{k} = 0.5 \qquad k = 1250 \text{ N/m} \qquad \textbf{Ans.}$$

© 2010 Pearson Education, Inc., Upper Saddle River, NJ. All rights reserved. This material is protected under all copyright laws as they currently exist. No portion of this material may be reproduced, in any form or by any means, without permission in writing from the publisher.

***22–60.** Find the differential equation for small oscillations in terms of θ for the uniform rod of mass m. Also show that if $c < \sqrt{mk}/2$, then the system remains underdamped. The rod is in a horizontal position when it is in equilibrium.

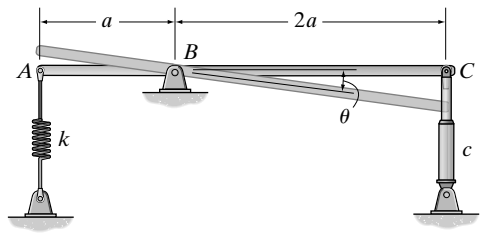

Equation of Motion: When the rod is in equilibrium, $\theta = 0°$, $F_c = c\dot{y}_c = 0$ and $\ddot{\theta} = 0$. writing the moment equation of motion about point B by referring to the free-body diagram of the rod, Fig. a,

$$+\Sigma M_B = 0; \qquad -F_A(a) - mg\left(\frac{a}{2}\right) = 0 \qquad F_A = \frac{mg}{2}$$

Thus, the initial stretch of the spring is $s_O = \frac{F_A}{k} = \frac{mg}{2k}$. When the rod rotates about point B through a small angle θ, the spring stretches further by $s_1 = a\theta$. Thus, the force in the spring is $F_A = k(s_0 + s_1) = k\left(\frac{mg}{2k} + a\theta\right)$. Also, the velocity of end C of the rod is $v_c = \dot{y}_c = 2a\dot{\theta}$. Thus, $F_c = c\dot{y}_c = c(2a\dot{\theta})$. The mass moment of inertia of the rod about B is $I_B = \frac{1}{12}m(3a)^2 + m\left(\frac{a}{2}\right)^2 = ma^2$. Again, referring to Fig. a and writing the moment equation of motion about B,

$$\Sigma M_B = I_B\alpha; \qquad k\left(\frac{mg}{2k} + a\theta\right)\cos\theta(a) + \left(2a\dot{\theta}\right)\cos\theta(2a) - mg\cos\theta\left(\frac{a}{2}\right)$$

$$= -ma^2\ddot{\theta}$$

$$\ddot{\theta} + \frac{4c}{m}\cos\theta\dot{\theta} + \frac{k}{m}(\cos\theta)\theta = 0$$

Since θ is small, $\cos\theta \cong 1$. Thus, this equation becomes

$$\ddot{\theta} + \frac{4c}{m}\dot{\theta} + \frac{k}{m}\theta = 0 \qquad \textbf{Ans.}$$

Comparing this equation to that of the standard form,

$$\omega_n = \sqrt{\frac{k}{m}} \qquad c_{eq} = 4c$$

Thus,

$$c_c = 2m\omega_n = 2m\sqrt{\frac{k}{m}} = 2\sqrt{mk}$$

For the system to be underdamped,

$$c_{eq} < c_c$$

$$4c < 2\sqrt{mk}$$

$$c < \frac{1}{2}\sqrt{mk} \qquad \textbf{Ans.}$$

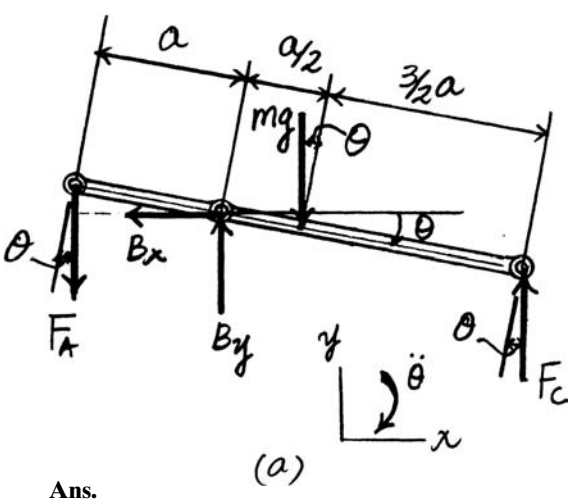

© 2010 Pearson Education, Inc., Upper Saddle River, NJ. All rights reserved. This material is protected under all copyright laws as they currently exist. No portion of this material may be reproduced, in any form or by any means, without permission in writing from the publisher.

•22–61. If the dashpot has a damping coefficient of $c = 50\ \text{N}\cdot\text{s/m}$, and the spring has a stiffness of $k = 600\ \text{N/m}$, show that the system is underdamped, and then find the pendulum's period of oscillation. The uniform rods have a mass per unit length of 10 kg/m.

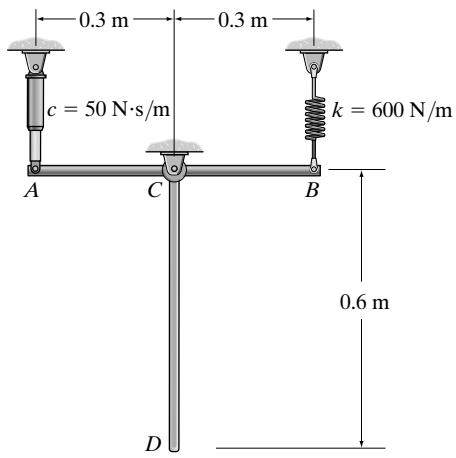

Equation of Motion: When the pendulum rotates point C through a small angle θ, the spring compresses $s = 0.3\theta$. Thus, the force in the spring is $F_B = ks = 600(0.3\theta) = 180\theta$. Also, the velocity of end A is $v_A = \dot{y}_A = 0.3\dot{\theta}$. Thus, $F_A = c\dot{y}_A = 50(0.3\dot{\theta}) = 15\dot{\theta}$. The mass moment of inertia of the pendulum about point C is $I_C = \frac{1}{12}\left[0.6(10)\left(0.6^2\right)\right] + \frac{1}{3}\left[0.6(10)\left(0.6^2\right)\right] = 0.9\ \text{kg}\cdot\text{m}^2$. Referring to the free-body diagram of the pendulum, Fig. *a*,

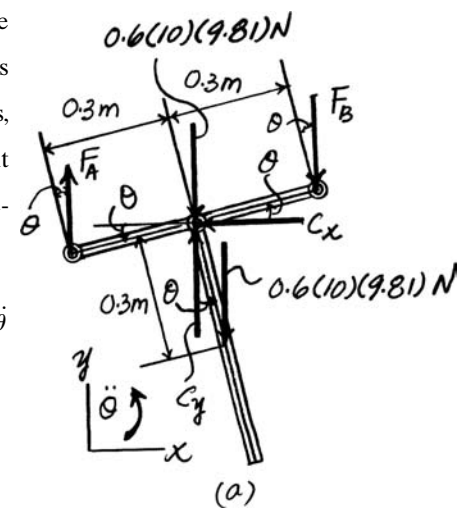

$$\Sigma M_C = I_C\,\alpha; \qquad -180\theta\cos\theta(0.3) - 15\dot{\theta}\cos\theta(0.3) - 0.6(10)(9.81)\sin\theta(0.3) = 0.9\ddot{\theta}$$

$$\ddot{\theta} + 5\cos\theta\dot{\theta} + 60\cos\theta\theta + 16.62\sin\theta = 0$$

Since θ is small, $\sin\theta \cong \theta$ and $\cos\theta \cong 1$. Thus, this equation becomes

$$\ddot{\theta} + 5\dot{\theta} + 79.62 = 0$$

Comparing this equation to that of the standard form,

$$c_{eq} = 5 \qquad\qquad \omega_n = 8.923\ \text{rad/s}$$

Here, $m = 2\left[(10)(0.6)\right] = 12\ \text{kg}$. Thus, $c_{eq} = 5m = 5(12) = 60\ \text{N}\cdot\text{m/s}$. Also, $c_c = 2m\omega_n = 2(12)8.923 = 214.15\ \text{N}\cdot\text{m/s}$. Since $c_{eq} < c_c$, the system is *underdamped* (Q.E.D.). Thus,

$$\omega_d = \omega_n\sqrt{1 - \left(\frac{c_{eq}}{c_c}\right)^2}$$

$$= 8.923\left(\sqrt{1 - \left(\frac{60}{214.15}\right)^2}\right)$$

$$= 8.566\ \text{rad/s}$$

Thus, the period of under-damped oscillation of the pendulum is

$$\tau_d = \frac{2\pi}{\omega_d} = \frac{2\pi}{8.566} = 0.734\ \text{s} \qquad \textbf{Ans.}$$

© 2010 Pearson Education, Inc., Upper Saddle River, NJ. All rights reserved. This material is protected under all copyright laws as they currently exist. No portion of this material may be reproduced, in any form or by any means, without permission in writing from the publisher.

22–62. If the 30-kg block is subjected to a periodic force of $P = (300 \sin 5t)$ N, $k = 1500$ N/m, and $c = 300$ N·s/m, determine the equation that describes the steady-state vibration as a function of time.

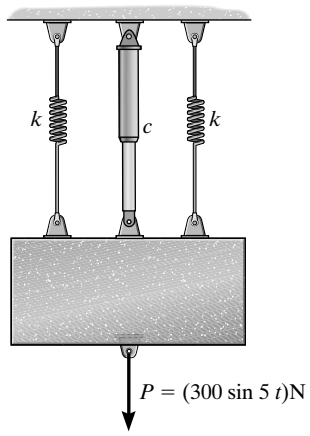

Here, $k_{eq} = 2k = 2(1500) = 3000$ N/m. Thus, the circular frequency of the system is

$$\omega_n = \sqrt{\frac{k_{eq}}{m}} = \sqrt{\frac{3000}{30}} = 10 \text{ rad/s}$$

The critical damping coefficient is

$$c_c = 2m\omega_n = 2(30)(10) = 600 \text{ N}\cdot\text{s/m}$$

Then, the damping factor is

$$\frac{c}{c_c} = \frac{300}{600} = 0.5$$

Here, $F_O = 300$ N and $\omega = 5$ rad/s.

$$Y = \frac{F_O / k_{eq}}{\sqrt{\left[1 - \left(\frac{\omega}{\omega_n}\right)^2\right]^2 + \left[\left(2\frac{c}{c_c}\right)\left(\frac{\omega}{\omega_n}\right)\right]^2}}$$

$$= \frac{300/3000}{\sqrt{\left[1 - \left(\frac{5}{10}\right)^2\right]^2 + \left[\frac{2(0.5)(5)}{10}\right]^2}}$$

$$= 0.1109 \text{ m}$$

$$\phi' = \tan^{-1}\left[\frac{2\frac{c}{c_c}\left(\frac{\omega}{\omega_n}\right)}{1 - \left(\frac{\omega}{\omega_n}\right)^2}\right] = \tan^{-1}\left[\frac{2(0.5)\left(\frac{5}{10}\right)}{1 - \left(\frac{5}{10}\right)^2}\right] = 33.69° = 0.588 \text{ rad}$$

Thus,

$$y_P = 0.111 \sin(5t - 0.588) \text{ m}$$ **Ans.**

© 2010 Pearson Education, Inc., Upper Saddle River, NJ. All rights reserved. This material is protected under all copyright laws as they currently exist. No portion of this material may be reproduced, in any form or by any means, without permission in writing from the publisher.

22–63. The block, having a weight of 15 lb, is immersed in a liquid such that the damping force acting on the block has a magnitude of $F = (0.8|v|)$ lb, where v is the velocity of the block in ft/s. If the block is pulled down 0.8 ft and released from rest, determine the position of the block as a function of time. The spring has a stiffness of $k = 40$ lb/ft. Consider positive displacement to be downward.

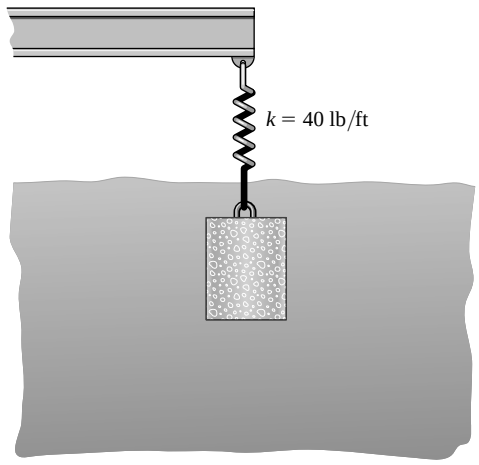

Viscous Damped Free Vibration: Here $c = 0.8\ \text{lb}\cdot\text{s/ft}$, $p = \sqrt{\dfrac{k}{m}} = \sqrt{\dfrac{40}{15/32.2}}$ $= 9.266$ rad/s and $c_c = 2mp = 2\left(\dfrac{15}{32.2}\right)(9.266) = 8.633\ \text{lb}\cdot\text{s/ft}$. Since $c < c_c$, the system is underdamped and the solution of the differential equation is in the form of

$$y = D\left[e^{-(c/2m)t}\sin(p_d t + \phi)\right] \qquad \textbf{[1]}$$

Taking the time derivative of Eq. [1], we have

$$v = \dot{y} = D\left[-\left(\frac{c}{2m}\right)e^{-(c/2m)t}\sin(p_d t + \phi) + p_d e^{-(c/2m)t}\cos(p_d t + \phi)\right]$$

$$= De^{-(c/2m)t}\left[-\left(\frac{c}{2m}\right)\sin(p_d t + \phi) + p_d\cos(p_d t + \phi)\right] \qquad \textbf{[2]}$$

Applying the initial condition $v = 0$ at $t = 0$ to Eq. [2], we have

$$0 = De^{-0}\left[-\left(\frac{c}{2m}\right)\sin(0 + \phi) + p_d\cos(0 + \phi)\right]$$

$$0 = D\left[-\left(\frac{c}{2m}\right)\sin\phi + p_d\cos\phi\right] \qquad \textbf{[3]}$$

Here, $\dfrac{c}{2m} = \dfrac{0.8}{2(15/32.2)} = 0.8587$ and $p_d = p\sqrt{1 - \left(\dfrac{c}{c_c}\right)^2} = 9.266\sqrt{1 - \left(\dfrac{0.8}{8.633}\right)^2}$ $= 9.227$ rad/s. Substituting these values into Eq. [3] yields

$$0 = D[-0.8587\sin\phi + 9.227\cos\phi] \qquad \textbf{[4]}$$

Applying the initial condition $y = 0.8$ ft at $t = 0$ to Eq. [1], we have

$$0.8 = D\left[e^{-0}\sin(0 + \phi)\right]$$

$$0.8 = D\sin\phi \qquad \textbf{[5]}$$

Solving Eqs. [4] and [5] yields

$$\phi = 84.68° = 1.50\ \text{rad} \qquad D = 0.8035\ \text{ft}$$

Substituting these values into Eq. [1] yields

$$y = 0.803\left[e^{-0.8597}\sin(9.23t + 1.48)\right] \qquad \textbf{Ans.}$$

© 2010 Pearson Education, Inc., Upper Saddle River, NJ. All rights reserved. This material is protected under all copyright laws as they currently exist. No portion of this material may be reproduced, in any form or by any means, without permission in writing from the publisher.

***22–64.** The small block at A has a mass of 4 kg and is mounted on the bent rod having negligible mass. If the rotor at B causes a harmonic movement $\delta_B = (0.1 \cos 15t)$ m, where t is in seconds, determine the steady-state amplitude of vibration of the block.

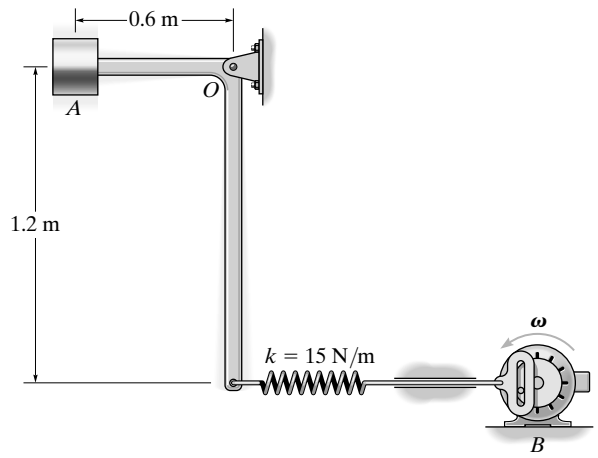

$$+\Sigma M_O = I_O\,\alpha; \qquad 4(9.81)(0.6) - F_s(1.2) = 4(0.6)^2\ddot{\theta}$$

$$F_s = kx = 15(x + x_{st} - 0.1\cos 15t)$$

$$x_{st} = \frac{4(9.81)(0.6)}{1.2(15)}$$

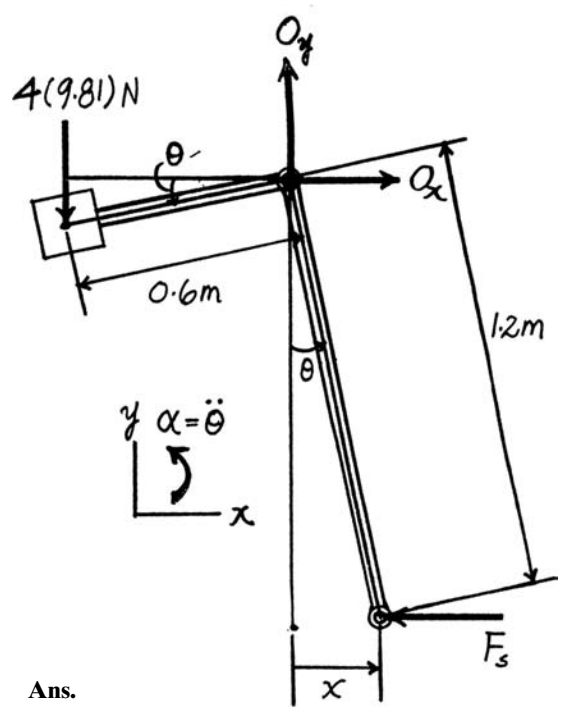

Thus,

$$-15(x - 0.1\cos 15t)(1.2) = 4(0.6)^2\ddot{\theta}$$

$$x = 1.2\theta$$

$$\theta + 15\theta = 1.25\cos 15t$$

Set $x_p = C\cos 15t$

$$-C(15)^2\cos 15t + 15(C\cos 15t) = 1.25\cos 15t$$

$$C = \frac{1.25}{15 - (15)^2} = -0.00595 \text{ m}$$

$$\theta_{\max} = C = 0.00595 \text{ rad}$$

$$y_{\max} = (0.6 \text{ m})(0.00595 \text{ rad}) = 3.57 \text{ rad} \qquad \textbf{Ans.}$$

© 2010 Pearson Education, Inc., Upper Saddle River, NJ. All rights reserved. This material is protected under all copyright laws as they currently exist. No portion of this material may be reproduced, in any form or by any means, without permission in writing from the publisher.

•22–65. The bar has a weight of 6 lb. If the stiffness of the spring is $k = 8$ lb/ft and the dashpot has a damping coefficient $c = 60$ lb·s/ft, determine the differential equation which describes the motion in terms of the angle θ of the bar's rotation. Also, what should be the damping coefficient of the dashpot if the bar is to be critically damped?

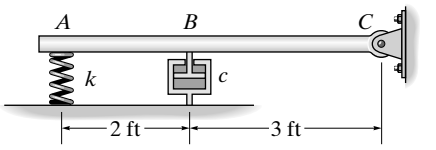

$$\circlearrowleft + \Sigma M_A = I_A\,\alpha; \qquad 6(2.5) - (60\dot{y}_2)(3) - 8(y_1 + y_{st})(5) = \left[\frac{1}{3}\left(\frac{6}{32.2}\right)(5)^2\right]\ddot{\theta}$$

$$1.5528\ddot{\theta} + 180\dot{y}_2 + 40y_1 + 40y_{st} - 15 = 0 \qquad \textbf{[1]}$$

From equilibrium $40y_{st} - 15 = 0$. Also, for small θ, $y_1 = 5\theta$ and $y_2 = 3\theta$ hence $\dot{y}_2 = 3\theta$.

From Eq. [1] $\qquad 1.5528\ddot{\theta} + 180(3\dot{\theta}) + 40(5\theta) = 0$

$$1.55\ddot{\theta} + 540\dot{\theta} + 200\theta = 0 \qquad \textbf{Ans.}$$

By comparing the above differential equation to Eq. 22-27

$$m = 1.55 \qquad k = 200 \qquad \omega_n = \sqrt{\frac{200}{1.55}} = 11.35 \text{ rad/s} \qquad c = 9c_{d\cdot p}$$

$$\left(\frac{9\left(c_{d\cdot p}\right)_c}{2m}\right)^2 - \frac{k}{m} = 0$$

$$\left(c_{d\cdot p}\right)_c = \frac{2}{9}\sqrt{km} = \frac{2}{9}\sqrt{200(1.55)} = 3.92 \text{ lb}\cdot\text{s/ft} \qquad \textbf{Ans.}$$

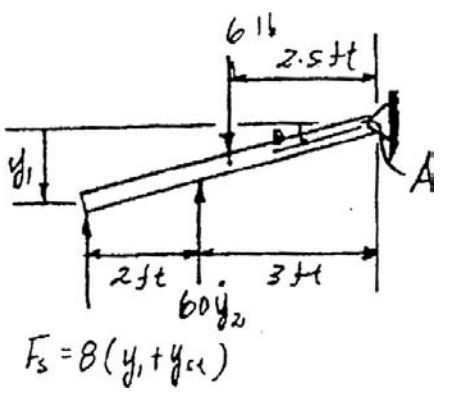

© 2010 Pearson Education, Inc., Upper Saddle River, NJ. All rights reserved. This material is protected under all copyright laws as they currently exist. No portion of this material may be reproduced, in any form or by any means, without permission in writing from the publisher.

22–66. A block having a mass of 7 kg is suspended from a spring that has a stiffness $k = 600$ N/m. If the block is given an upward velocity of 0.6 m/s from its equilibrium position at $t = 0$, determine its position as a function of time. Assume that positive displacement of the block is downward and that motion takes place in a medium which furnishes a damping force $F = (50|v|)$ N, where v is the velocity of the block in m/s.

$$c = 50 \text{ N s/m} \quad k = 600 \text{ N/m} \quad m = 7 \text{ kg}$$

$$\omega_n = \sqrt{\frac{k}{m}} = \sqrt{\frac{600}{7}} = 9.258 \text{ rad/s}$$

$$c_c = 2m\omega_n = 2(7)(9.258) = 129.6 \text{ N}\cdot\text{s/m}$$

Since $c < c_z$, the system is underdamped,

$$\omega_d = \omega_n \sqrt{1 - \left(\frac{c}{c_c}\right)^2} = 9.258 \sqrt{1 - \left(\frac{50}{129.6}\right)^2} = 8.542 \text{ rad/s}$$

$$\frac{c}{2m} = \frac{50}{2(7)} = 3.751$$

From Eq. 22-32

$$y = D\left[e^{-\left(\frac{c}{2m}\right)t} \sin(\omega_d t + \phi)\right]$$

$$v = \dot{y} = D\left[e^{-\left(\frac{c}{2m}\right)t} \omega_d \cos(\omega_d t + \phi) + \left(-\frac{c}{2m}\right) e^{-\left(\frac{c}{2m}\right)t} \sin(\omega_d t + \phi)\right]$$

$$v = De^{-\left(\frac{c}{2m}\right)t}\left[\omega_d \cos(\omega_d t + \phi) - \frac{c}{2m}\sin(\omega_d t + \phi)\right]$$

Applying the initial condition at $t = 0$, $y = 0$ and $v = -0.6$ m/s.

$$0 = D[e^{-0} \sin(0 + \phi)] \qquad \text{since} \quad D \neq 0$$

$$\sin\phi = 0 \qquad \phi = 0°$$

$$-0.6 = De^{-0}[8.542 \cos 0° - 0]$$

$$D = -0.0702 \text{ m}$$

$$y = \{-0.0702[e^{-3.57t} \sin(8.540)]\} \text{ m} \qquad \textbf{Ans.}$$

© 2010 Pearson Education, Inc., Upper Saddle River, NJ. All rights reserved. This material is protected under all copyright laws as they currently exist. No portion of this material may be reproduced, in any form or by any means, without permission in writing from the publisher.

22–67. A 4-lb weight is attached to a spring having a stiffness $k = 10$ lb/ft. The weight is drawn downward a distance of 4 in. and released from rest. If the support moves with a vertical displacement $\delta = (0.5 \sin 4t)$ in., where t is in seconds, determine the equation which describes the position of the weight as a function of time.

From Prob. 22-46

$$y = A \sin \omega_n t + B \cos \omega_n t + \frac{\delta_0}{1 - \left(\frac{\omega_0}{\omega_0}\right)^2} \sin \omega_0 t$$

$$v = \dot{y} = A\omega_n \cos \omega_n t - B\omega_n \sin \omega_n t + \frac{\delta_0\, \omega_0}{1 - \left(\frac{\omega_0}{\omega_n}\right)^2} \cos \omega_0 t$$

The initial condition when $t = 0$, $y = y_0$ and $v = v_0$

$$y_0 = 0 + B + 0 \qquad B = y_0$$

$$v_0 = A\omega_n - 0 + \frac{\delta_0\, \omega_0}{1 - \left(\frac{\omega_0}{\omega_n}\right)^2} \qquad A = \frac{v_0}{\omega_n} - \frac{\delta_0\, \omega_0}{\omega_n - \frac{\omega_0^2}{\omega_n}}$$

Thus,

$$y = \left(\frac{v_0}{\omega_n} - \frac{\delta_0\, \omega_0}{\omega_n - \frac{\omega_0^2}{\omega_n}}\right) \sin \omega_n t + y_0 \cos \omega_n t + \frac{\delta_0}{1 - \left(\frac{\omega_0}{\omega_n}\right)^2} \sin \omega_0 t$$

$$\omega_n = \sqrt{\frac{k}{m}} = \sqrt{\frac{10}{4/32.2}} = 8.972$$

$$\frac{\delta_0}{1 - \left(\frac{\omega_0}{\omega_n}\right)^2} = \frac{0.5/12}{1 - \left(\frac{4}{8.972}\right)^2} = 0.0520$$

$$\frac{v_0}{\omega_n} - \frac{\delta_0\, \omega_0}{\omega_n - \frac{\omega_0^2}{\omega_n}} = 0 - \frac{(0.5/12)4}{8.972 - \frac{4^2}{8.972}} = -0.0232$$

$$y = \{-0.0232 \sin 8.97t + 0.333 \cos 8.97t + 0.0520 \sin 4t\} \text{ ft} \qquad \textbf{Ans.}$$

© 2010 Pearson Education, Inc., Upper Saddle River, NJ. All rights reserved. This material is protected under all copyright laws as they currently exist. No portion of this material may be reproduced, in any form or by any means, without permission in writing from the publisher.

***22–68.** Determine the differential equation of motion for the damped vibratory system shown. What type of motion occurs?

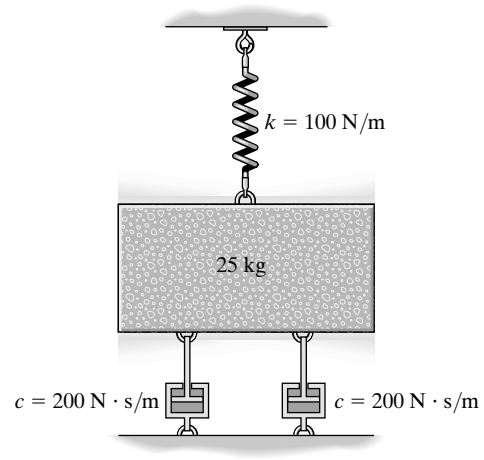

$+\downarrow \Sigma F_y = ma_y;\qquad mg - k(y + y_{st}) - 2c\dot{y} = m\ddot{y}$

$$m\ddot{y} + ky + 2c\dot{y} + ky_{st} - mg = 0$$

Equilibrium $\qquad ky_{st} - mg = 0$

$$m\ddot{y} + 2c\dot{y} + ky = 0 \text{ Here } m = 25 \text{ kg} \quad k = 100 \text{ N/m}$$

$$c = 200 \text{ N} \cdot \text{s/m}$$

$$25\ddot{y} + 400\dot{y} + 100y = 0 \qquad \textbf{(1)}$$

$$\ddot{y} + 16\dot{y} + 4y = 0 \qquad \textbf{Ans.}$$

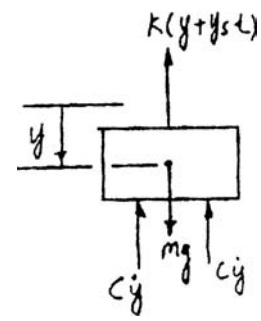

By comparing Eq. (1) to Eq. 22–27

$$m = 25 \qquad k = 100 \qquad c = 400 \qquad \omega_n = \sqrt{\frac{4}{1}} = 2 \text{ rad/s}$$

$$c_c = 2m\omega_n = 2(25)(2) = 100 \text{ N} \cdot \text{s/m}$$

Since $c > c_c$, the system will not vibrate. Therefore, it is **overdamped**. **Ans.**

© 2010 Pearson Education, Inc., Upper Saddle River, NJ. All rights reserved. This material is protected under all copyright laws as they currently exist. No portion of this material may be reproduced, in any form or by any means, without permission in writing from the publisher.

•22–69. The 4-kg circular disk is attached to three springs, each spring having a stiffness $k = 180$ N/m. If the disk is immersed in a fluid and given a downward velocity of 0.3 m/s at the equilibrium position, determine the equation which describes the motion. Consider positive displacement to be measured downward, and that fluid resistance acting on the disk furnishes a damping force having a magnitude $F = (60|v|)$ N, where v is the velocity of the block in m/s.

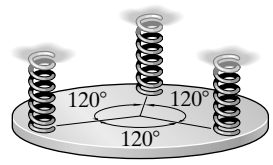

$$k = 540 \text{ N/m}$$

$$\omega_n = \sqrt{\frac{k}{m}} = \sqrt{\frac{540}{4}} = 11.62 \text{ rad/s}$$

$$c_c = 2m\omega_n = 2(4)(11.62) = 92.95$$

$$F = 60v, \text{ so that } c = 60$$

Since $c < c_c$, system is underdamped.

$$\omega_d = \omega_n\sqrt{1 - (\frac{c}{c_c})^2}$$

$$= 11.62\sqrt{1 - (\frac{60}{92.95})^2}$$

$$= 8.87 \text{ rad/s}$$

$$y = A[e^{-(\frac{c}{2m})t}\sin(\omega_d t + \phi)] \qquad \textbf{(1)}$$

$$y = 0, v = 0.3 \text{ at } t = 0$$

$$0 = A\sin\phi$$

$$A \neq 0 \text{ (trivial solution) so that } \phi = 0$$

$$v = y = A[-\frac{c}{2m}e^{-(\frac{c}{2m})t}\sin(\omega_d t + \phi) + e^{-(\frac{c}{2m})t}\cos(\omega_d t + \phi)(\omega_d)]$$

Since $\phi = 0$

$$0.3 = A[0 + 1(8.87)]$$

$$A = 0.0338$$

Substituting into Eq. (1)

$$y = 0.0338[e^{-(\frac{60}{2(4)})t}\sin(8.87)t]$$

Expressing the result in mm

$$y = 33.8[e^{-7.5t}\sin(8.87t)] \text{ mm} \qquad \textbf{Ans.}$$

© 2010 Pearson Education, Inc., Upper Saddle River, NJ. All rights reserved. This material is protected under all copyright laws as they currently exist. No portion of this material may be reproduced, in any form or by any means, without permission in writing from the publisher.

22–70. Using a block-and-spring model, like that shown in Fig. 22–13*a,* but suspended from a vertical position and subjected to a periodic support displacement of $\delta = \delta_0 \cos \omega_0 t$, determine the equation of motion for the system, and obtain its general solution. Define the displacement y measured from the static equilibrium position of the block when $t = 0$.

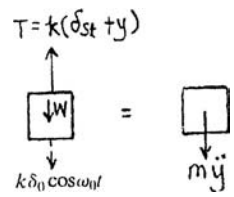

$$+\downarrow \Sigma F_y = ma_y; \qquad k\delta_0 \cos \omega_0 t + W - k\delta_{st} - ky = m\ddot{y}$$

Since $W = k\delta_{st}$,

$$\ddot{y} + \frac{k}{m} y = \frac{k\delta_0}{m} \cos \omega_0 t \qquad \textbf{(1)}$$

$$y_C = A \sin \omega_n y + B \cos \omega_n y \text{ (General sol.)}$$

$$y_p = C \cos \omega_0 t \text{ (Particular sol.)}$$

Substitute y_p into Eq. (1)

$$C(-\omega_0{}^2 + \frac{k}{m}) \cos \omega_0 t = \frac{k\delta_0}{m} \cos \omega_0 t$$

$$C = \frac{\frac{k\delta_0}{m}}{(\frac{k}{m} - \omega_0{}^2)}$$

Thus, $y = y_C + y_P$

$$y = A \sin \omega_n t + B \cos \omega_n t + \frac{\frac{k\delta_0}{m}}{(\frac{k}{m} - \omega_0{}^2)} \cos \omega_0 t \qquad \textbf{Ans.}$$

22–71. The electric motor turns an eccentric flywheel which is equivalent to an unbalanced 0.25-lb weight located 10 in. from the axis of rotation. If the static deflection of the beam is 1 in. due to the weight of the motor, determine the angular velocity of the flywheel at which resonance will occur. The motor weights 150 lb. Neglect the mass of the beam.

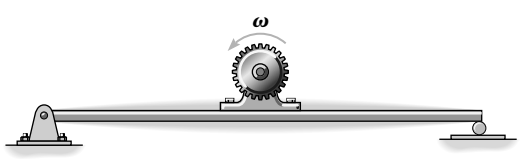

$$k = \frac{F}{\delta} = \frac{150}{1/12} = 1800 \text{ lb/ft} \qquad \omega_n = \sqrt{\frac{k}{m}} = \sqrt{\frac{1800}{150/32.2}} = 19.66$$

Resonance occurs when $\omega_0 = \omega_n = 19.7$ rad/s **Ans.**

© 2010 Pearson Education, Inc., Upper Saddle River, NJ. All rights reserved. This material is protected under all copyright laws as they currently exist. No portion of this material may be reproduced, in any form or by any means, without permission in writing from the publisher.

***22–72.** What will be the amplitude of steady-state vibration of the motor in Prob. 22–71 if the angular velocity of the flywheel is 20 rad/s?

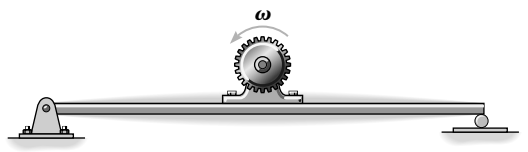

The constant value F_0 of the periodic force is due to the centrifugal force of the unbalanced mass.

$$F_0 = ma_n = mr\omega_0{}^2 = \left(\frac{0.25}{32.2}\right)\left(\frac{10}{12}\right)(20)^2 = 2.588 \text{ lb}$$

Hence $F = 2.588 \sin 20t$

$$k = \frac{F}{\delta} = \frac{150}{1/12} = 1800 \text{ lb/ft} \qquad \omega_n = \sqrt{\frac{k}{m}} = \sqrt{\frac{1800}{150/32.2}} = 19.657$$

From Eq. 22–21, the amplitude of the steady state motion is

$$C = \left|\frac{F_0/k}{1 - \left(\frac{\omega_0}{\omega_n}\right)^2}\right| = \left|\frac{2.588/1800}{1 - \left(\frac{20}{19.657}\right)^2}\right| = 0.04085 \text{ ft} = 0.490 \text{ in.} \qquad \textbf{Ans.}$$

•22–73. Determine the angular velocity of the flywheel in Prob. 22–71 which will produce an amplitude of vibration of 0.25 in.

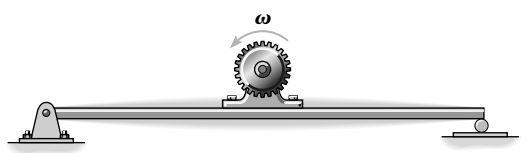

The constant value F_0 of the periodic force is due to the centrifugal force of the unbalanced mass.

$$F_O = ma_n = mr\omega^2 = \left(\frac{0.25}{32.2}\right)\left(\frac{10}{12}\right)\omega^2 = 0.006470\omega^2$$

$$F = 0.006470\omega^2 \sin \omega t$$

$$k = \frac{F}{\delta} = \frac{150}{1/12} = 1800 \text{ lb/ft} \qquad p = \sqrt{\frac{k}{m}} = \sqrt{\frac{1800}{150/32.2}} = 19.657$$

From Eq. 22.21, the amplitude of the steady state motion is

$$C = \left|\frac{F_O/k}{1 - \left(\frac{\omega}{p}\right)^2}\right|$$

$$\frac{0.25}{12} = \left|\frac{0.006470\left(\frac{\omega^2}{1800}\right)}{1 - \left(\frac{\omega}{19.657}\right)^2}\right|$$

$$\omega = 19.0 \text{ rad/s} \qquad \textbf{Ans.}$$

Or,

$$\theta_0 = 20.3 \text{ rad/} \qquad \textbf{Ans.}$$

© 2010 Pearson Education, Inc., Upper Saddle River, NJ. All rights reserved. This material is protected under all copyright laws as they currently exist. No portion of this material may be reproduced, in any form or by any means, without permission in writing from the publisher.

22–74. Draw the electrical circuit that is equivalent to the mechanical system shown. Determine the differential equation which describes the charge q in the circuit.

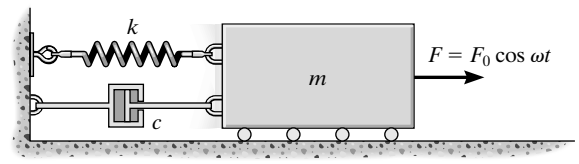

For the block,

$$mx + cx + kx = F_0 \cos \omega t$$

Using Table 22–1,

$$Lq + Rq + \left(\frac{1}{C}\right)q = E_0 \cos \omega t \qquad \textbf{Ans.}$$

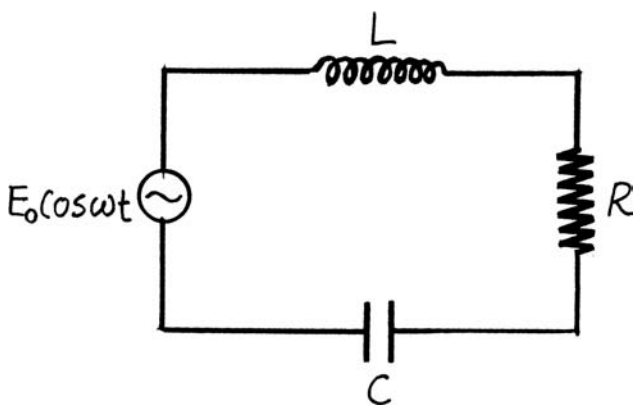

22–75. Determine the differential equation of motion for the damped vibratory system shown. What type of motion occurs? Take $k = 100$ N/m, $c = 200$ N·s/m, $m = 25$ kg.

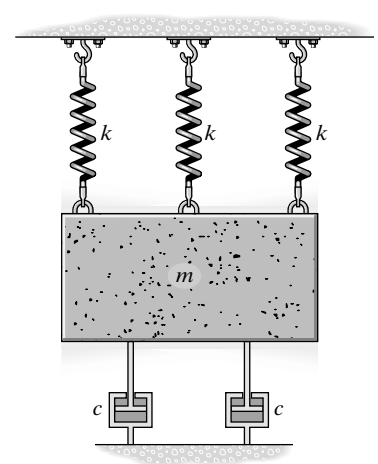

Free-body Diagram: When the block is being displaced by an amount y vertically downward, the *restoring force* is developed by the three springs attached the block.

Equation of Motion:

$+\uparrow \Sigma F_x = 0;$ $\qquad 3ky + mg + 2c\dot{y} - mg = -m\ddot{y}$

$$m\ddot{y} + 2c\dot{y} + 3ky = 0 \qquad \textbf{[1]}$$

Here, $m = 25$ kg, $c = 200$ N·s/m and $k = 100$ N/m. Substituting these values into Eq. [1] yields

$$25\ddot{y} + 400\dot{y} + 300y = 0$$

$$\ddot{y} + 16\dot{y} + 12y = 0 \qquad \textbf{Ans.}$$

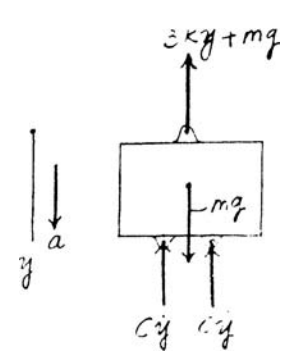

Comparing the above differential equation with Eq. 22–27, we have $m = 1$kg, $c = 16$ N·s/m and $k = 12$ N/m. Thus, $p = \sqrt{\frac{k}{m}} = \sqrt{\frac{12}{1}} = 3.464$ rad/s.

$$c_c = 2mp = 2(1)(3.464) = 6928 \text{ N·s/m}$$

Since $c > c_c$, the system will not vibrate. Therefore it is **overdamped.** **Ans.**

© 2010 Pearson Education, Inc., Upper Saddle River, NJ. All rights reserved. This material is protected under all copyright laws as they currently exist. No portion of this material may be reproduced, in any form or by any means, without permission in writing from the publisher.

***22–76.** Draw the electrical circuit that is equivalent to the mechanical system shown. What is the differential equation which describes the charge q in the circuit?

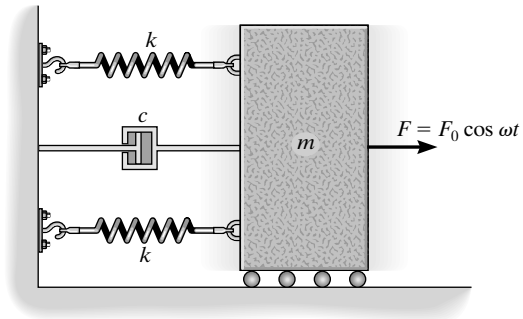

Electrical Circuit Analogs: The differential equation that deseribes the motion of the given mechanical system is

$$m\ddot{x} + c\dot{x} + 2kx = F_0 \cos \omega t$$

From Table 22–1 of the text, the differential equation of the analog electrical circuit is

$$L\ddot{q} + R\dot{q} + \left(\frac{2}{C}\right)q = E_0 \cos \omega t \qquad \textbf{Ans.}$$

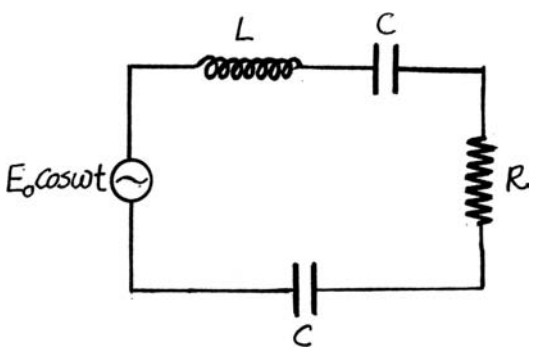

•22–77. Draw the electrical circuit that is equivalent to the mechanical system shown. Determine the differential equation which describes the charge q in the circuit.

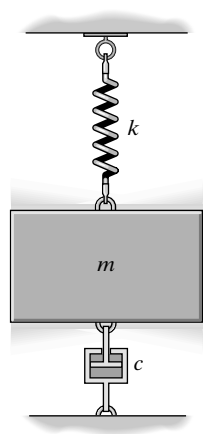

For the block

$$m\ddot{y} + c\dot{y} + ky = 0$$

Using Table 22–1
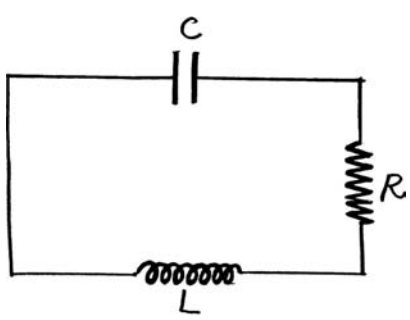
$$L\ddot{q} + R\dot{q} + \frac{1}{C}q = 0 \qquad \textbf{Ans.}$$