© 2010 Pearson Education, Inc., Upper Saddle River, NJ. All rights reserved. This material is protected under all copyright laws as they currently exist. No portion of this material may be reproduced, in any form or by any means, without permission in writing from the publisher.

•16–1. A disk having a radius of 0.5 ft rotates with an initial angular velocity of 2 rad/s and has a constant angular acceleration of 1 rad/s^2. Determine the magnitudes of the velocity and acceleration of a point on the rim of the disk when $t = 2$ s.

$\omega = \omega_0 + \alpha_c t;$

$\omega = 2 + 1(2) = 4 \text{ rad/s}$

$v = r\omega; \qquad v = 0.5(4) = 2 \text{ ft/s}$ **Ans.**

$a_t = r\alpha; \qquad a_t = 0.5(1) = 0.5 \text{ ft/s}^2$

$a_n = \omega^2 r; \qquad a_n = (4)^2(0.5) = 8 \text{ ft/s}^2$

$a = \sqrt{8^2 + (0.5)^2} = 8.02 \text{ ft/s}^2$ **Ans.**

16–2. Just after the fan is turned on, the motor gives the blade an angular acceleration $\alpha = (20e^{-0.6t})$ rad/s^2, where t is in seconds. Determine the speed of the tip P of one of the blades when $t = 3$ s. How many revolutions has the blade turned in 3 s? When $t = 0$ the blade is at rest.

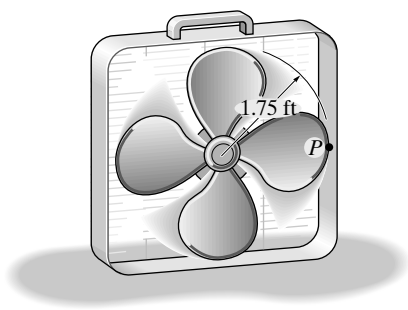

$d\omega = \alpha\, dt$

$$\int_0^{\omega} d\omega = \int_0^t 20e^{-0.6t}\, dt$$

$$\omega = -\frac{20}{0.6} e^{-0.6t}\Big|_0^t = 33.3\left(1 - e^{-0.6t}\right)$$

$\omega = 27.82$ rad/s when $t = 3$s

$v_p = \omega r = 27.82(1.75) = 48.7 \text{ ft/s}$ **Ans.**

$d\theta = \omega\, dt$

$$\int_0^{\theta} d\theta = \int_0^t 33.3\left(1 - e^{-0.6t}\right) dt$$

$$\theta = 33.3\left(t + \left(\frac{1}{0.6}\right)e^{-0.6t}\right)\Big|_0^3 = 33.3\left[3 + \left(\frac{1}{0.6}\right)\left(e^{-0.6(3)} - 1\right)\right]$$

$\theta = 53.63 \text{ rad} = 8.54 \text{ rev}$ **Ans.**

© 2010 Pearson Education, Inc., Upper Saddle River, NJ. All rights reserved. This material is protected under all copyright laws as they currently exist. No portion of this material may be reproduced, in any form or by any means, without permission in writing from the publisher.

16–3. The hook is attached to a cord which is wound around the drum. If it moves from rest with an acceleration of 20 ft/s^2, determine the angular acceleration of the drum and its angular velocity after the drum has completed 10 rev. How many more revolutions will the drum turn after it has first completed 10 rev and the hook continues to move downward for 4 s?

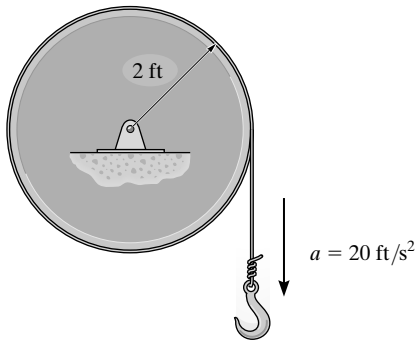

Angular Motion: The angular acceleration of the drum can be determine by applying Eq. 16–11.

$$a_t = \alpha r; \qquad 20 = \alpha(2) \qquad \alpha = 10.0 \text{ rad/s}^2 \qquad \textbf{Ans.}$$

Applying Eq. 16–7 with $\alpha_c = \alpha = 10.0 \text{ rad/s}^2$ and $\theta = (10 \text{ rev}) \times \left(\frac{2\pi \text{ rad}}{1 \text{ rev}}\right)$ $= 20\pi$ rad, we have

$$\omega^2 = \omega_0^2 + 2\alpha_c(\theta - \theta_0)$$

$$\omega^2 = 0 + 2(10.0)(20\pi - 0)$$

$$\omega = 35.45 \text{ rad/s} = 35.4 \text{ rad/s} \qquad \textbf{Ans.}$$

The angular displacement of the drum 4 s after it has completed 10 revolutions can be determined by applying Eq. 16–6 with $\omega_0 = 35.45$ rad/s.

$$\theta = \theta_0 + \omega_0 t + \frac{1}{2}\alpha_c t^2$$

$$= 0 + 35.45(4) + \frac{1}{2}(10.0)\left(4^2\right)$$

$$= (221.79 \text{ rad}) \times \left(\frac{1 \text{ rev}}{2\pi \text{ rad}}\right) = 35.3\text{rev} \qquad \textbf{Ans.}$$

© 2010 Pearson Education, Inc., Upper Saddle River, NJ. All rights reserved. This material is protected under all copyright laws as they currently exist. No portion of this material may be reproduced, in any form or by any means, without permission in writing from the publisher.

***16–4.** The torsional pendulum (wheel) undergoes oscillations in the horizontal plane, such that the angle of rotation, measured from the equilibrium position, is given by $\theta = (0.5 \sin 3t)$ rad, where t is in seconds. Determine the maximum velocity of point A located at the periphery of the wheel while the pendulum is oscillating. What is the acceleration of point A in terms of t?

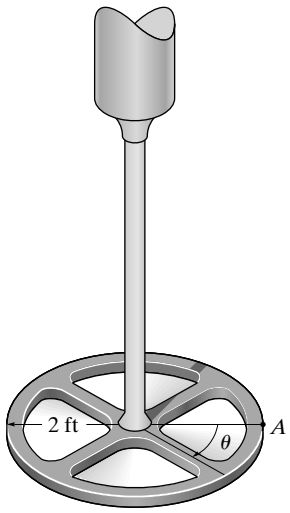

Angular Velocity: Here, $\theta = (0.5 \sin 3t)$ rad/s. Applying Eq. 16–1, we have

$$\omega = \frac{d\theta}{dt} = (1.5 \cos 3t) \text{ rad/s}$$

By observing the above equation, the angular velocity is maximum if $\cos 3t = 1$. Thus, the maximum angular velocity is $\omega_{max} = 1.50$ rad/s. The maximum speed of point A can be obtained by applying Eq. 16–8.

$$(v_A)_{max} = \omega_{max}\, r = 1.50(2) = 3.00 \text{ ft/s} \qquad \textbf{Ans.}$$

Angular Acceleration: Applying Eq. 16–2, we have

$$\alpha = \frac{d\omega}{dt} = (-4.5 \sin 3t) \text{ rad/s}^2$$

The tangential and normal components of the acceleration of point A can be determined using Eqs. 16–11 and 16–12, respectively.

$$a_t = \alpha r = (-4.5 \sin 3t)(2) = (-9 \sin 3t) \text{ ft/s}^2$$

$$a_n = \omega^2 r = (1.5 \cos 3t)^2 (2) = \left(4.5 \cos^2 3t\right) \text{ ft/s}^2$$

Thus,

$$\mathbf{a}_A = \left(-9 \sin 3t\mathbf{u}_t + 4.5 \cos^2 3t\mathbf{u}_n\right) \text{ ft/s}^2 \qquad \textbf{Ans.}$$

•16–5. The operation of reverse gear in an automotive transmission is shown. If the engine turns shaft A at $\omega_A = 40$ rad/s, determine the angular velocity of the drive shaft, ω_B. The radius of each gear is listed in the figure.

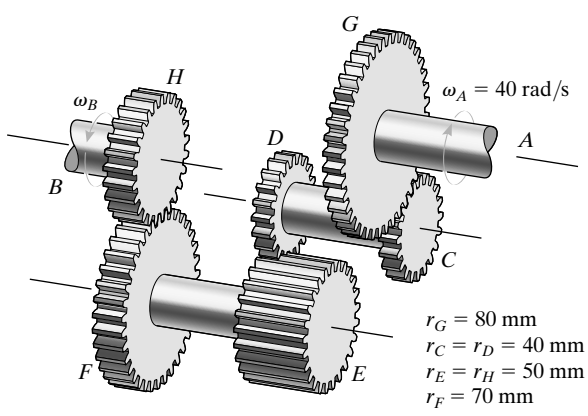

$r_A \omega_A = r_C \omega_C$: $\quad 80(40) = 40\omega_C \quad \omega_C = \omega_D = 80$ rad/s

$\omega_E r_E = \omega_D r_D$: $\quad \omega_E(50) = 80(40) \quad \omega_E = \omega_F = 64$ rad/s

$\omega_F r_F = \omega_B r_B$: $\quad 64(70) = \omega_B(50) \quad \omega_B = 89.6$ rad/s

$\omega_B = 89.6$ rad/s **Ans.**

© 2010 Pearson Education, Inc., Upper Saddle River, NJ. All rights reserved. This material is protected under all copyright laws as they currently exist. No portion of this material may be reproduced, in any form or by any means, without permission in writing from the publisher.

16–6. The mechanism for a car window winder is shown in the figure. Here the handle turns the small cog C, which rotates the spur gear S, thereby rotating the fixed-connected lever AB which raises track D in which the window rests. The window is free to slide on the track. If the handle is wound at 0.5 rad/s, determine the speed of points A and E and the speed v_w of the window at the instant $\theta = 30°$.

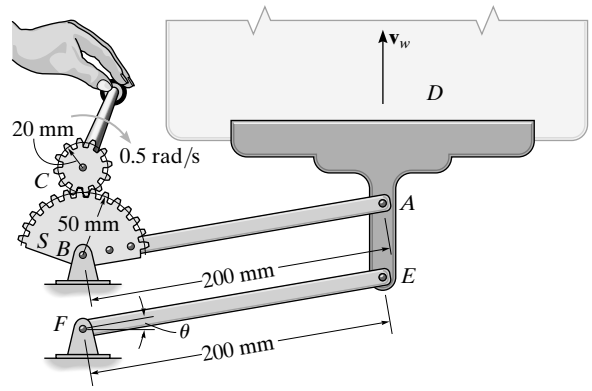

$$v_C = \omega_C r_C = 0.5(0.02) = 0.01 \text{ m/s}$$

$$\omega_S = \frac{v_C}{r_S} = \frac{0.01}{0.05} = 0.2 \text{ rad/s}$$

$$v_A = v_E = \omega_S r_A = 0.2(0.2) = 0.04 \text{ m/s} = 40 \text{ mm/s} \qquad \textbf{Ans.}$$

Points A and E move along circular paths. The vertical component closes the window.

$$v_w = 40 \cos 30° = 34.6 \text{ mm/s} \qquad \textbf{Ans.}$$

16–7. The gear A on the drive shaft of the outboard motor has a radius $r_A = 0.5$ in. and the meshed pinion gear B on the propeller shaft has a radius $r_B = 1.2$ in. Determine the angular velocity of the propeller in $t = 1.5$ s, if the drive shaft rotates with an angular acceleration $\alpha = (400t^3)$ rad/s^2, where t is in seconds. The propeller is originally at rest and the motor frame does not move.

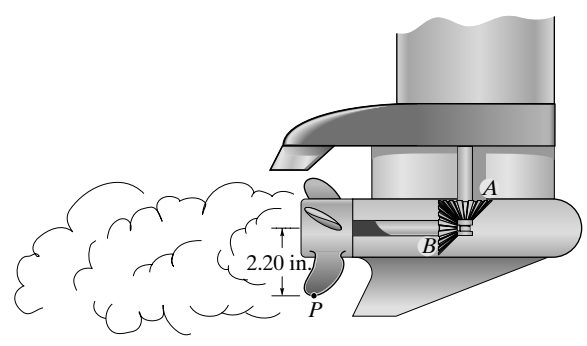

Angular Motion: The angular velocity of gear A at $t = 1.5$ s must be determined first. Applying Eq. 16–2, we have

$$d\omega = \alpha dt$$

$$\int_0^{\omega_A} d\omega = \int_0^{1.5\,s} 400t^3\, dt$$

$$\omega_A = 100t^4\Big|_0^{1.5\,s} = 506.25 \text{ rad/s}$$

However, $\omega_A r_A = \omega_B r_B$ where ω_B is the angular velocity of propeller. Then,

$$\omega_B = \frac{r_A}{r_B}\omega_A = \left(\frac{0.5}{1.2}\right)(506.25) = 211 \text{ rad/s} \qquad \textbf{Ans.}$$

© 2010 Pearson Education, Inc., Upper Saddle River, NJ. All rights reserved. This material is protected under all copyright laws as they currently exist. No portion of this material may be reproduced, in any form or by any means, without permission in writing from the publisher.

***16–8.** For the outboard motor in Prob. 16–7, determine the magnitude of the velocity and acceleration of point P located on the tip of the propeller at the instant $t = 0.75$ s.

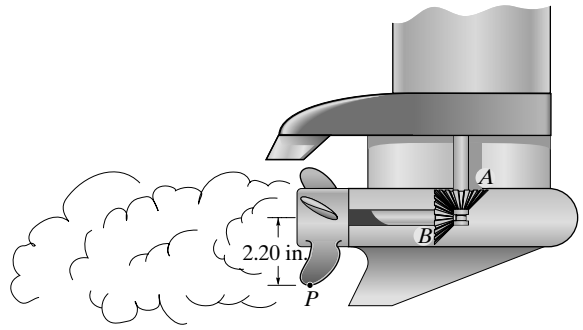

Angular Motion: The angular velocity of gear A at $t = 0.75$ s must be determined first. Applying Eq. 16–2, we have

$$d\omega = \alpha dt$$

$$\int_0^{\omega_A} d\omega = \int_0^{0.75\,s} 400t^3\,dt$$

$$\omega_A = 100t^4\Big|_0^{0.75\,s} = 31.64 \text{ rad/s}$$

The angular acceleration of gear A at $t = 0.75$ s is given by

$$\alpha_A = 400\left(0.75^3\right) = 168.75 \text{ rad/s}^2$$

However, $\omega_A r_A = \omega_B r_B$ and $\alpha_A r_A = \alpha_B r_B$ where ω_B and α_B are the angular velocity and acceleration of propeller. Then,

$$\omega_B = \frac{r_A}{r_B}\omega_A = \left(\frac{0.5}{1.2}\right)(31.64) = 13.18 \text{ rad/s}$$

$$\alpha_B = \frac{r_A}{r_B}\alpha_A = \left(\frac{0.5}{1.2}\right)(168.75) = 70.31 \text{ rad/s}^2$$

Motion of *P*: The magnitude of the velocity of point P can be determined using Eq. 16–8.

$$v_P = \omega_B r_P = 13.18\left(\frac{2.20}{12}\right) = 2.42 \text{ ft/s} \qquad \textbf{Ans.}$$

The tangential and normal components of the acceleration of point P can be determined using Eqs. 16–11 and 16–12, respectively.

$$a_r = \alpha_B r_P = 70.31\left(\frac{2.20}{12}\right) = 12.89 \text{ ft/s}^2$$

$$a_n = \omega_B^2 r_P = \left(13.18^2\right)\left(\frac{2.20}{12}\right) = 31.86 \text{ ft/s}^2$$

The magnitude of the acceleration of point P is

$$a_P = \sqrt{a_r^2 + a_n^2} = \sqrt{12.89^2 + 31.86^2} = 34.4 \text{ ft/s}^2 \qquad \textbf{Ans.}$$

© 2010 Pearson Education, Inc., Upper Saddle River, NJ. All rights reserved. This material is protected under all copyright laws as they currently exist. No portion of this material may be reproduced, in any form or by any means, without permission in writing from the publisher.

•16–9. When only two gears are in mesh, the driving gear A and the driven gear B will always turn in opposite directions. In order to get them to turn in the *same direction* an idler gear C is used. In the case shown, determine the angular velocity of gear B when $t = 5$ s, if gear A starts from rest and has an angular acceleration of $\alpha_A = (3t + 2)$ rad/s^2, where t is in seconds.

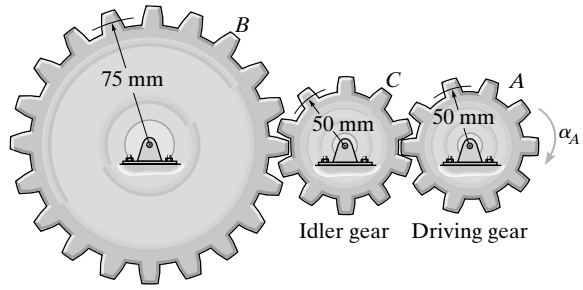

$$d\omega = \alpha\, dt$$

$$\int_0^{\omega_A} d\omega_A = \int_0^t (3t + 2)\, dt$$

$$\omega_A = 1.5t^2 + 2t|_{t=5} = 47.5 \text{ rad/s}$$

$$(47.5)(50) = \omega_C\,(50)$$

$$\omega_C = 47.5 \text{ rad/s}$$

$$\omega_B\,(75) = 47.5(50)$$

$$\omega_B = 31.7 \text{ rad/s}$$ **Ans.**

16–10. During a gust of wind, the blades of the windmill are given an angular acceleration of $\alpha = (0.2\theta)$ rad/s^2, where θ is in radians. If initially the blades have an angular velocity of 5 rad/s, determine the speed of point P, located at the tip of one of the blades, just after the blade has turned two revolutions.

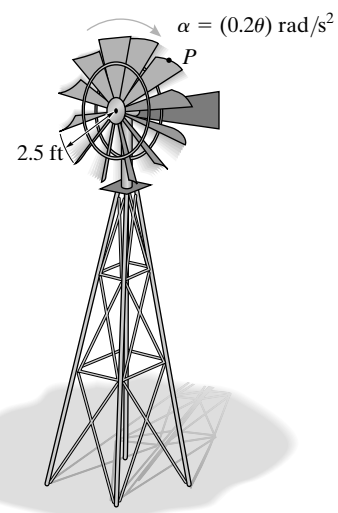

Angular Motion: The angular velocity of the blade can be obtained by applying Eq. 16–4.

$$\omega d\omega = \alpha d\theta$$

$$\int_{5\text{ rad/s}}^{\omega} \omega d\omega = \int_0^{4\pi} 0.2\theta d\theta$$

$$\omega = 7.522 \text{ rad/s}$$

Motion of *P*: The speed of point P can be determined using Eq. 16–8.

$$v_P = \omega r_P = 7.522(2.5) = 18.8 \text{ ft/s}$$ **Ans.**

© 2010 Pearson Education, Inc., Upper Saddle River, NJ. All rights reserved. This material is protected under all copyright laws as they currently exist. No portion of this material may be reproduced, in any form or by any means, without permission in writing from the publisher.

16–11. The can opener operates such that the can is driven by the drive wheel D. If the armature shaft S on the motor turns with a constant angular velocity of 40 rad/s, determine the angular velocity of the can. The radii of S, can P, drive wheel D, gears A, B, and C, are $r_S = 5$ mm, $r_P = 40$ mm, $r_D = 7.5$ mm, $r_A = 20$ mm, $r_B = 10$ mm, and $r_C = 25$ mm, respectively.

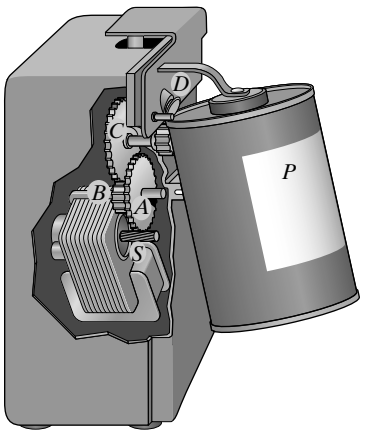

Gears A and B will have the same angular velocity since they are mounted on the same axle. Thus,

$$\omega_A r_A = \omega_s r_s$$

$$\omega_B = \omega_A = \left(\frac{r_s}{r_A}\right)\omega_s = \left(\frac{5}{20}\right)(40) = 10 \text{ rad/s}$$

Wheel D is mounted on the same axle as gear C, which in turn is in mesh with gear B.

$$\omega_C r_C = \omega_B r_B$$

$$\omega_D = \omega_C = \left(\frac{r_B}{r_C}\right)\omega_B = \left(\frac{10}{25}\right)(10) = 4 \text{ rads/s}$$

Finally, the rim of can P is in mesh with wheel D.

$$\omega_P r_P = \omega_D r_D$$

$$\omega_P = \left(\frac{r_D}{r_P}\right)\omega_D = \left(\frac{7.5}{40}\right)(4) = 0.75 \text{ rad/s} \qquad \textbf{Ans.}$$

***16–12.** If the motor of the electric drill turns the armature shaft S with a constant angular acceleration of $\alpha_S = 30$ rad/s^2, determine the angular velocity of the shaft after it has turned 200 rev, starting from rest.

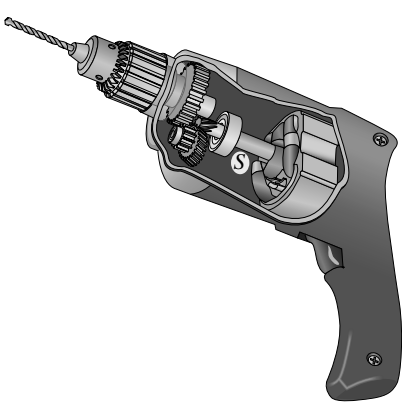

Motion of Pulley *A*: Here, $\theta_s = (200 \text{ rev})\left(\frac{2\pi \text{ rad}}{1 \text{ rev}}\right) = 400\pi$ rad. Since the angular acceleration of shaft s is constant, its angular velocity can be determined from

$$\omega_s{}^2 = (\omega_s)_0{}^2 + 2\alpha_C\left[\theta_s - (\theta_s)_0\right]$$

$$\omega_s{}^2 = 0^2 + 2(30)(400\pi - 0)$$

$$\omega_s = 274.6 \text{ rad/s} \qquad \textbf{Ans.}$$

© 2010 Pearson Education, Inc., Upper Saddle River, NJ. All rights reserved. This material is protected under all copyright laws as they currently exist. No portion of this material may be reproduced, in any form or by any means, without permission in writing from the publisher.

•16–13. If the motor of the electric drill turns the armature shaft S with an angular velocity of $\omega_S = (100t^{1/2})$ rad/s, determine the angular velocity and angular acceleration of the shaft at the instant it has turned 200 rev, starting from rest.

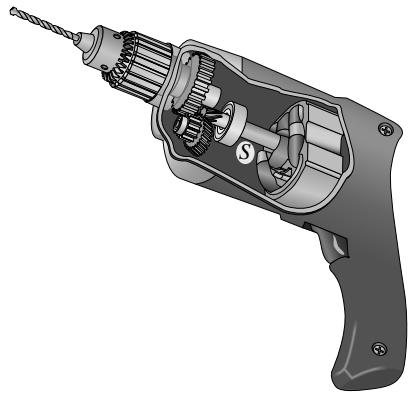

Motion of Armature Shaft *S*: Here, $\theta_s = (200 \text{ rev})\left(\frac{2\pi \text{rad}}{1 \text{ rev}}\right) = 400\pi$. The angular velocity of A can be determined from

$$\int d\theta_s = \int \omega_s dt$$

$$\int_0^{\theta_s} \theta_s = \int_0^t 100t^{1/2} dt$$

$$\theta_s\Big|_0^{\theta_s} = 66.67t^{3/2}\Big|_0^t$$

$$\theta_s = \left(66.67t^{3/2}\right)\text{rad}$$

When $\theta_s = 400\pi$ rad,

$$400\pi = 66.67t^{3/2}$$

$$t = 7.083 \text{ s}$$

Thus, the angular velocity of the shaft after it turns 200 rev ($t = 7.083$ s) is

$$\omega_s = 100(7.083)^{1/2} = 266 \text{ rad/s} \qquad \textbf{Ans.}$$

The angular acceleration of the shaft is

$$\alpha_s = \frac{d\omega_s}{dt} = 100\left(\frac{1}{2}t^{-1/2}\right) = \left(\frac{50}{t^{1/2}}\right)\text{rad/s}^2$$

When $t = 7.083$ s,

$$\alpha_s = \frac{50}{7.083^{1/2}} = 18.8 \text{ rad/s}^2 \qquad \textbf{Ans.}$$

© 2010 Pearson Education, Inc., Upper Saddle River, NJ. All rights reserved. This material is protected under all copyright laws as they currently exist. No portion of this material may be reproduced, in any form or by any means, without permission in writing from the publisher.

16–14. A disk having a radius of 6 in. rotates about a fixed axis with an angular velocity of $\omega = (2t + 3)$ rad/s, where t is in seconds. Determine the tangential and normal components of acceleration of a point located on the rim of the disk at the instant the angular displacement is $\theta = 40$ rad.

Motion of the Disk: We have

$$\int d\theta = \int \omega dt$$

$$\int_0^\theta d\theta = \int_0^t (2t + 3)dt$$

$$\theta|_0^\theta = \left(t^2 + 3t\right)\Big|_0^t$$

$$\theta = \left(t^2 + 3t\right) \text{ rad}$$

When $\theta = 40$ rad,

$$40 = t^2 + 3t$$

$$t^2 + 3t - 40 = 0$$

Solving for the positive root,

$$t = 5 \text{ s}$$

Also,

$$\alpha = \frac{d\omega}{dt} = 2 \text{ rad/s}^2$$

When $t = 5$ s($\theta = 40$ rad),

$$\omega = 2(5) + 3 = 13 \text{ rad/s}$$

Motion of Point *P*: Using the result for ω and α, the tangential and normal components of the acceleration of point P are

$$a_t = \alpha r_p = 2\left(\frac{6}{12}\right) = 1 \text{ ft/s}^2 \qquad \textbf{Ans.}$$

$$a_n = \omega^2 r_p = (13)^2\left(\frac{6}{12}\right) = 84.5 \text{ ft/s}^2 \qquad \textbf{Ans.}$$

© 2010 Pearson Education, Inc., Upper Saddle River, NJ. All rights reserved. This material is protected under all copyright laws as they currently exist. No portion of this material may be reproduced, in any form or by any means, without permission in writing from the publisher.

16–15. The 50-mm-radius pulley A of the clothes dryer rotates with an angular acceleration of $\alpha_A = (27\theta_A^{1/2})$ rad/s^2, where θ_A is in radians. Determine its angular acceleration when $t = 1$ s, starting from rest.

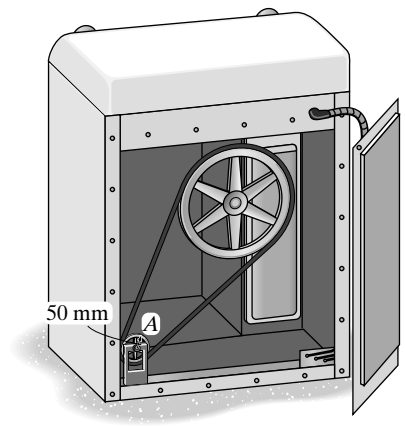

Motion of Pulley *A*: The angular velocity of pulley A can be determined from

$$\int \omega_A \, d\omega_A = \int \alpha_A \, d\theta_A$$

$$\int_0^{\omega_A} \omega_A d\omega_A = \int_0^{\theta_A} 27\theta_A{}^{1/2} d\theta_A$$

$$\left.\frac{\omega_A{}^2}{2}\right|_0^{\omega_A} = 18\theta_A{}^{3/2}\Big|_0^{\theta_A}$$

$$\omega_A = \left(6\theta_A{}^{3/4}\right) \text{ rad/s}$$

Using this result, the angular displacement of A as a function of t can be determined from

$$\int dt = \int \frac{d\theta_A}{\omega_A}$$

$$\int_0^t dt = \int_0^{\theta_A} \frac{d\theta_A}{6\theta_A{}^{3/4}}$$

$$t\Big|_0^t = \left.\frac{2}{3}\theta_A{}^{1/4}\right|_0^{\theta_A}$$

$$t = \left(\frac{2}{3}\theta_A{}^{1/4}\right) \text{s}$$

$$\theta_A = \left(\frac{3}{2}t\right)^4 \text{ rad}$$

When $t = 1$ s

$$\theta_A = \left[\frac{3}{2}(1)\right]^4 = 5.0625 \text{ rad}$$

Thus, when $t = 1$ s, α_A is

$$\alpha_A = 27\left(5.0625^{1/2}\right) = 60.8 \text{ rad/s}^2 \qquad \textbf{Ans.}$$

© 2010 Pearson Education, Inc., Upper Saddle River, NJ. All rights reserved. This material is protected under all copyright laws as they currently exist. No portion of this material may be reproduced, in any form or by any means, without permission in writing from the publisher.

***16–16.** If the 50-mm-radius motor pulley A of the clothes dryer rotates with an angular acceleration of $\alpha_A = (10 + 50t)\ \text{rad/s}^2$, where t is in seconds, determine its angular velocity when $t = 3$ s, starting from rest.

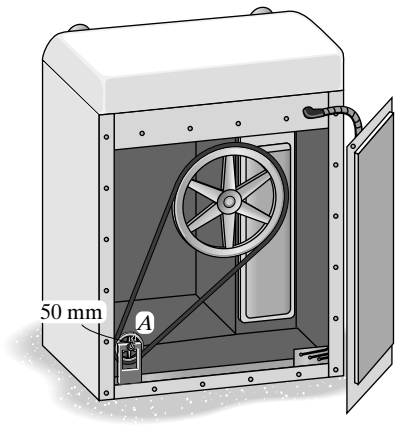

Motion of Pulley *A*: The angular velocity of pulley A can be determined from

$$\int d\omega_A = \int \alpha_A dt$$

$$\int_0^{\omega_A} d\omega_A = \int_0^t (10 + 50t)dt$$

$$\omega_A\Big|_0^{\omega_A} = \left(10t + 25t^2\right)\Big|_0^t$$

$$\omega_A = \left(10t + 25t^2\right)\text{rad/s}$$

When $t = 3$ s

$$\omega_A = 10(3) + 25\left(3^2\right) = 225\ \text{rad/s} \qquad \textbf{Ans.}$$

•16–17. The vacuum cleaner's armature shaft S rotates with an angular acceleration of $\alpha = 4\omega^{3/4}\ \text{rad/s}^2$, where ω is in rad/s. Determine the brush's angular velocity when $t = 4$ s, starting from rest. The radii of the shaft and the brush are 0.25 in. and 1 in., respectively. Neglect the thickness of the drive belt.

Motion of the Shaft: The angular velocity of the shaft can be determined from

$$\int dt = \int \frac{d\omega_S}{\alpha_S}$$

$$\int_0^t dt = \int_0^{\omega_s} \frac{d\omega_S}{4\omega_S{}^{3/4}}$$

$$t\Big|_0^t = \omega_S{}^{1/4}\Big|_0^{\omega_s}$$

$$t = \omega_S{}^{1/4}$$

$$\omega_S = \left(t^4\right)\ \text{rad/s}$$

When $t = 4$ s

$$\omega_s = 4^4 = 256\ \text{rad/s}$$

Motion of the Beater Brush: Since the brush is connected to the shaft by a non-slip belt, then

$$\omega_B r_B = \omega_s r_s$$

$$\omega_B = \left(\frac{r_s}{r_B}\right)\omega_s = \left(\frac{0.25}{1}\right)(256) = 64\ \text{rad/s} \qquad \textbf{Ans.}$$

© 2010 Pearson Education, Inc., Upper Saddle River, NJ. All rights reserved. This material is protected under all copyright laws as they currently exist. No portion of this material may be reproduced, in any form or by any means, without permission in writing from the publisher.

16–18. Gear A is in mesh with gear B as shown. If A starts from rest and has a constant angular acceleration of $\alpha_A = 2\ \text{rad/s}^2$, determine the time needed for B to attain an angular velocity of $\omega_B = 50\ \text{rad/s}$.

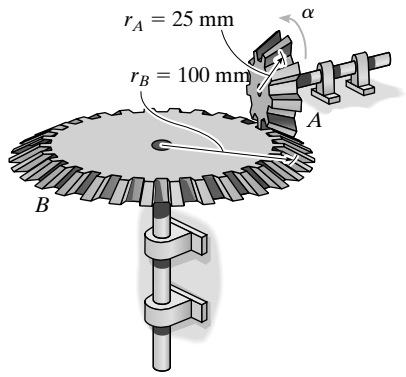

Angular Motion: The angular acceleration of gear B must be determined first. Here, $\alpha_A r_A = \alpha_B r_B$. Then,

$$\alpha_B = \frac{r_A}{r_B}\alpha_A = \left(\frac{25}{100}\right)(2) = 0.5\ \text{rad/s}^2$$

The time for gear B to attain an angular velocity of $\omega_B = 50\ \text{rad/s}$ can be obtained by applying Eq. 16–5.

$$\omega_B = (\omega_0)_B + \alpha_B t$$

$$50 = 0 + 0.5t$$

$$t = 100\ \text{s} \qquad \textbf{Ans.}$$

© 2010 Pearson Education, Inc., Upper Saddle River, NJ. All rights reserved. This material is protected under all copyright laws as they currently exist. No portion of this material may be reproduced, in any form or by any means, without permission in writing from the publisher.

16–19. The vertical-axis windmill consists of two blades that have a parabolic shape. If the blades are originally at rest and begin to turn with a constant angular acceleration of $\alpha_c = 0.5\ \text{rad/s}^2$, determine the magnitude of the velocity and acceleration of points A and B on the blade after the blade has rotated through two revolutions.

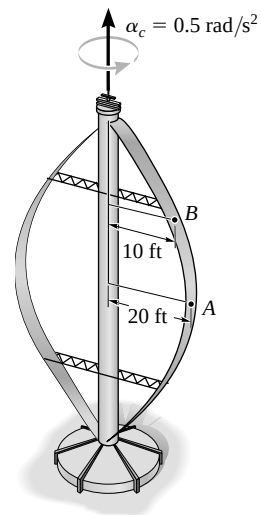

Angular Motion: The angular velocity of the blade after the blade has rotated $2(2\pi) = 4\pi$ rad can be obtained by applying Eq. 16–7.

$$\omega^2 = \omega_0^2 + 2\alpha_c(\theta - \theta_0)$$

$$\omega^2 = 0^2 + 2(0.5)(4\pi - 0)$$

$$\omega = 3.545\ \text{rad/s}$$

Motion of *A* and *B*: The magnitude of the velocity of point A and B on the blade can be determined using Eq. 16–8.

$$v_A = \omega r_A = 3.545(20) = 70.9\ \text{ft/s} \qquad \textbf{Ans.}$$

$$\omega_B = \omega r_B = 3.545(10) = 35.4\ \text{ft/s} \qquad \textbf{Ans.}$$

The tangential and normal components of the acceleration of point A and B can be determined using Eqs. 16–11 and 16–12 respectively.

$$(a_t)_A = \alpha r_A = 0.5(20) = 10.0\ \text{ft/s}^2$$

$$(a_n)_A = \omega^2 r_A = \left(3.545^2\right)(20) = 251.33\ \text{ft/s}^2$$

$$(a_t)_B = \alpha r_B = 0.5(10) = 5.00\ \text{ft/s}^2$$

$$(a_n)_B = \omega^2 r_B = \left(3.545^2\right)(10) = 125.66\ \text{ft/s}^2$$

The magnitude of the acceleration of points A and B are

$$(a)_A = \sqrt{(a_t)_A^2 + (a_n)_A^2} = \sqrt{10.0^2 + 251.33^2} = 252\ \text{ft/s}^2 \qquad \textbf{Ans.}$$

$$(a)_B = \ = \sqrt{(a_t)_B^2 + (a_n)_B^2} = \sqrt{5.00^2 + 125.66^2} = 126\ \text{ft/s}^2 \qquad \textbf{Ans.}$$

© 2010 Pearson Education, Inc., Upper Saddle River, NJ. All rights reserved. This material is protected under all copyright laws as they currently exist. No portion of this material may be reproduced, in any form or by any means, without permission in writing from the publisher.

***16–20.** The vertical-axis windmill consists of two blades that have a parabolic shape. If the blades are originally at rest and begin to turn with a constant angular acceleration of $\alpha_c = 0.5\ \text{rad/s}^2$, determine the magnitude of the velocity and acceleration of points A and B on the blade when $t = 4$ s.

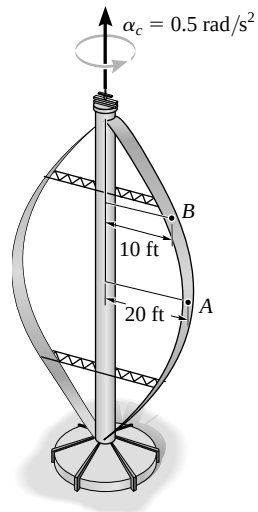

Angular Motion: The angular velocity of the blade at $t = 4$ s can be obtained by applying Eq. 16–5.

$$\omega = \omega_0 + \alpha_c t = 0 + 0.5(4) = 2.00\ \text{rad/s}$$

Motion of *A* and *B*: The magnitude of the velocity of points A and B on the blade can be determined using Eq. 16–8.

$$v_A = \omega r_A = 2.00(20) = 40.0\ \text{ft/s} \qquad \textbf{Ans.}$$

$$v_B = \omega r_B = 2.00(10) = 20.0\ \text{ft/s} \qquad \textbf{Ans.}$$

The tangential and normal components of the acceleration of points A and B can be determined using Eqs. 16–11 and 16–12 respectively.

$$(a_t)_A = \alpha r_A = 0.5(20) = 10.0\ \text{ft/s}^2$$

$$(a_n)_A = \omega^2 r_A = \left(2.00^2\right)(20) = 80.0\ \text{ft/s}^2$$

$$(a_t)_B = \alpha r_B = 0.5(10) = 5.00\ \text{ft/s}^2$$

$$(a_n)_B = \omega^2 r_B = \left(2.00^2\right)(10) = 40.0\ \text{ft/s}^2$$

The magnitude of the acceleration of points A and B are

$$(a)_A = \sqrt{(a_t)_A^2 + (a_n)_A^2} = \sqrt{10.0^2 + 80.0^2} = 80.6\ \text{ft/s}^2 \qquad \textbf{Ans.}$$

$$(a)_B = \sqrt{(a_t)_B^2 + (a_n)_B^2} = \sqrt{5.00^2 + 40.0^2} = 40.3\ \text{ft/s}^2 \qquad \textbf{Ans.}$$

16.21. The disk is originally rotating at $\omega_0 = 8$ rad/s. If it is subjected to a constant angular acceleration of $\alpha = 6\ \text{rad/s}^2$, determine the magnitudes of the velocity and the n and t components of acceleration of point A at the instant $t = 0.5$ s.

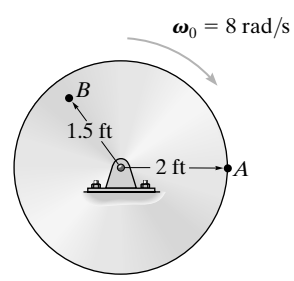

$$\omega = \omega_0 + \alpha_c t$$

$$\omega = 8 + 6(0.5) = 11\ \text{rad/s}$$

$$v = r\omega; \qquad v_A = 2(11) = 22\ \text{ft/s} \qquad \textbf{Ans.}$$

$$a_t = r\alpha; \qquad (a_A)_t = 2(6) = 12.0\ \text{ft/s}^2 \qquad \textbf{Ans.}$$

$$a_n = \omega^2 r; \qquad (a_A)_n = (11)^2(2) = 242\ \text{ft/s}^2 \qquad \textbf{Ans.}$$

© 2010 Pearson Education, Inc., Upper Saddle River, NJ. All rights reserved. This material is protected under all copyright laws as they currently exist. No portion of this material may be reproduced, in any form or by any means, without permission in writing from the publisher.

16–22. The disk is originally rotating at $\omega_0 = 8$ rad/s. If it is subjected to a constant angular acceleration of $\alpha = 6$ rad/s^2, determine the magnitudes of the velocity and the n and t components of acceleration of point B just after the wheel undergoes 2 revolutions.

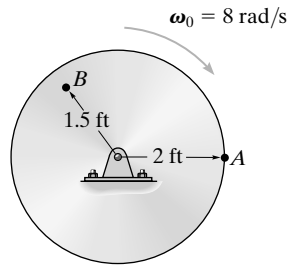

$$\omega^2 = \omega_0^2 + 2\alpha_c(\theta - \theta_0)$$

$$\omega^2 = (8)^2 + 2(6)[2(2\pi) - 0]$$

$$\omega = 14.66 \text{ rad/s}$$

$$v_B = \omega r = 14.66(1.5) = 22.0 \text{ ft/s} \qquad \textbf{Ans.}$$

$$(a_B)_t = \alpha r = 6(1.5) = 9.00 \text{ ft/s}^2 \qquad \textbf{Ans.}$$

$$(a_B)_n = \omega^2 r = (14.66)^2(1.5) = 322 \text{ ft/s}^2 \qquad \textbf{Ans.}$$

16–23. The blade C of the power plane is driven by pulley A mounted on the armature shaft of the motor. If the constant angular acceleration of pulley A is $\alpha_A = 40$ rad/s^2, determine the angular velocity of the blade at the instant A has turned 400 rev, starting from rest.

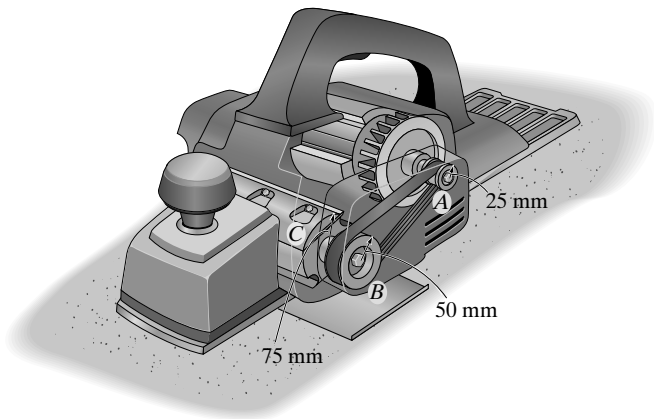

Motion of Pulley *A*: Here, $\theta_A = (400 \text{ rev})\left(\frac{2\pi \text{ rad}}{1 \text{ rev}}\right) = 800\pi$ rad. Since the angular velocity can be determined from

$$\omega_A{}^2 = (\omega_A)_0{}^2 + 2\alpha_C\left[\theta_A - (\theta_A)_0\right]$$

$$\omega_A{}^2 = 0^2 + 2(40)(800\pi - 0)$$

$$\omega_A = 448.39 \text{ rad/s}$$

Motion of Pulley *B*: Since blade C and pulley B are on the same axle, both will have the same angular velocity. Pulley B is connected to pulley A by a nonslip belt. Thus,

$$\omega_B r_B = \omega_A r_A$$

$$\omega_C = \omega_B = \left(\frac{r_A}{r_B}\right)\omega_A = \left(\frac{25}{50}\right)(448.39) = 224 \text{ rad/s} \qquad \textbf{Ans.}$$

© 2010 Pearson Education, Inc., Upper Saddle River, NJ. All rights reserved. This material is protected under all copyright laws as they currently exist. No portion of this material may be reproduced, in any form or by any means, without permission in writing from the publisher.

***16–24.** For a short time the motor turns gear A with an angular acceleration of $\alpha_A = (30t^{1/2})\ \text{rad/s}^2$, where t is in seconds. Determine the angular velocity of gear D when $t = 5$ s, starting from rest. Gear A is initially at rest. The radii of gears A, B, C, and D are $r_A = 25$ mm, $r_B = 100$ mm, $r_C = 40$ mm, and $r_D = 100$ mm, respectively.

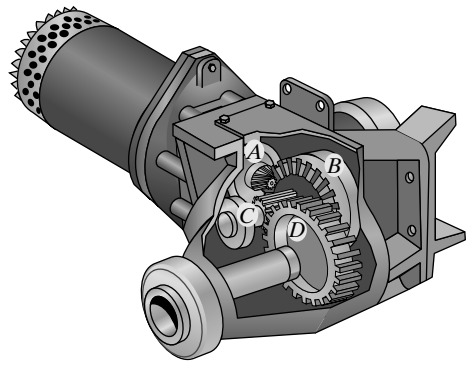

Motion of the Gear *A*: The angular velocity of gear A can be determined from

$$\int d\omega_A = \int \alpha dt$$

$$\int_0^{\omega_A} d\omega_A = \int_0^t 30t^{1/2} dt$$

$$\omega_A \Big|_0^{\omega_A} = 20t^{3/2}\Big|_0^t$$

$$\omega_A = \left(20t^{3/2}\right)\ \text{rad/s}$$

When $t = 5$ s

$$\omega_A = 20\left(5^{3/2}\right) = 223.61\ \text{rad/s}$$

Motion of Gears *B*, *C*, and *D*: Gears B and C which are mounted on the same axle will have the same angular velocity. Since gear B is in mesh with gear A, then

$$\omega_B r_B = \omega_A r_A$$

$$\omega_C = \omega_B = \left(\frac{r_A}{r_B}\right)\omega_A = \left(\frac{25}{100}\right)(223.61) = 55.90\ \text{rad/s}$$

Also, gear D is in mesh with gear C. Then

$$\omega_D r_D = \omega_C r_C$$

$$\omega_D = \left(\frac{r_C}{r_D}\right)\omega_C = \left(\frac{40}{100}\right)(55.90) = 22.4\ \text{rad/s} \qquad \textbf{Ans.}$$

© 2010 Pearson Education, Inc., Upper Saddle River, NJ. All rights reserved. This material is protected under all copyright laws as they currently exist. No portion of this material may be reproduced, in any form or by any means, without permission in writing from the publisher.

•16–25. The motor turns gear A so that its angular velocity increases uniformly from zero to 3000 rev/min after the shaft turns 200 rev. Determine the angular velocity of gear D when $t = 3$ s. The radii of gears A, B, C, and D are $r_A = 25$ mm, $r_B = 100$ mm, $r_C = 40$ mm, and $r_D = 100$ mm, respectively.

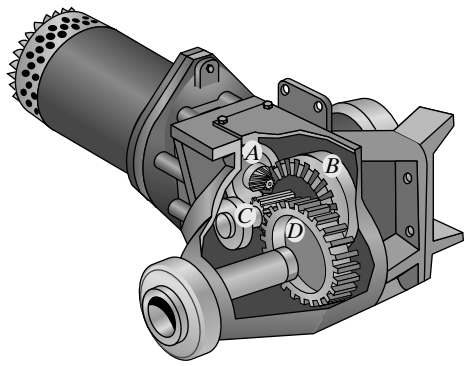

Motion of Wheel *A*: Here, $\omega_A = \left(3000\,\frac{\text{rev}}{\text{min}}\right)\left(\frac{1\text{ min}}{60\text{ s}}\right)\left(\frac{2\pi\text{ rad}}{1\text{rev}}\right) = 100\pi$ rad/s

when $\theta_A = (200\text{ rev})\left(\frac{2\pi\text{ rad}}{1\text{ rev}}\right) = 400\pi$ rad. Since the angular acceleration of gear A is constant, it can be determined from

$$\omega_A{}^2 = (\omega_A)_0{}^2 + 2\alpha_A\left[\theta_A - (\theta_A)_0\right]$$

$$(100\pi)^2 = 0^2 + 2\alpha_A\,(400\pi - 0)$$

$$\alpha_A = 39.27\text{ rad/s}^2$$

Thus, the angular velocity of gear A when $t = 3$ s is

$$\omega_A = (\omega_A)_0 + \alpha_A\,t$$

$$= 0 + 39.27(3)$$

$$= 117.81\text{ rad/s}$$

Motion of Gears *B*, *C*, and *D*: Gears B and C which are mounted on the same axle will have the same angular velocity. Since gear B is in mesh with gear A, then

$$\omega_B\,r_B = \omega_B\,r_A$$

$$\omega_C = \omega_B = \left(\frac{r_A}{r_B}\right)\omega_A = \left(\frac{25}{100}\right)(117.81) = 29.45\text{ rad/s}$$

Also, gear D is in mesh with gear C. Then

$$\omega_D\,r_D = \omega_C\,r_C$$

$$\omega_D = \left(\frac{r_C}{r_D}\right)\omega_C = \left(\frac{40}{100}\right)(29.45) = 11.8\text{ rad/s} \qquad \textbf{Ans.}$$

© 2010 Pearson Education, Inc., Upper Saddle River, NJ. All rights reserved. This material is protected under all copyright laws as they currently exist. No portion of this material may be reproduced, in any form or by any means, without permission in writing from the publisher.

16–26. Rotation of the robotic arm occurs due to linear movement of the hydraulic cylinders A and B. If this motion causes the gear at D to rotate clockwise at 5 rad/s, determine the magnitude of velocity and acceleration of the part C held by the grips of the arm.

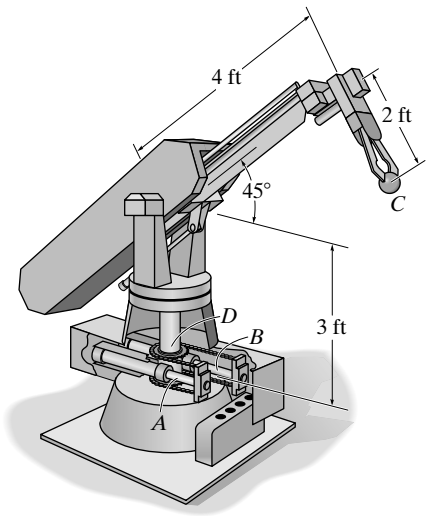

Motion of Part *C*: Since the shaft that turns the robot's arm is attached to gear D, then the angular velocity of the robot's arm $\omega_R = \omega_D = 5.00$ rad/s. The distance of part C from the rotating shaft is $r_C = 4\cos 45° + 2\sin 45° = 4.243$ ft. The magnitude of the velocity of part C can be determined using Eq. 16–8.

$$v_C = \omega_R r_C = 5.00(4.243) = 21.2 \text{ ft/s} \qquad \textbf{Ans.}$$

The tangential and normal components of the acceleration of part C can be determined using Eqs. 16–11 and 16–12 respectively.

$$a_t = \alpha r_C = 0$$

$$a_n = \omega_R^2 r_C = \left(5.00^2\right)(4.243) = 106.07 \text{ ft/s}^2$$

The magnitude of the acceleration of point C is

$$a_C = \sqrt{a_t^2 + a_n^2} = \sqrt{0^2 + 106.07^2} = 106 \text{ ft/s}^2 \qquad \textbf{Ans.}$$

© 2010 Pearson Education, Inc., Upper Saddle River, NJ. All rights reserved. This material is protected under all copyright laws as they currently exist. No portion of this material may be reproduced, in any form or by any means, without permission in writing from the publisher.

16–27. For a short time, gear A of the automobile starter rotates with an angular acceleration of $\alpha_A = (450t^2 + 60)\ \text{rad/s}^2$, where t is in seconds. Determine the angular velocity and angular displacement of gear B when $t = 2$ s, starting from rest. The radii of gears A and B are 10 mm and 25 mm, respectively.

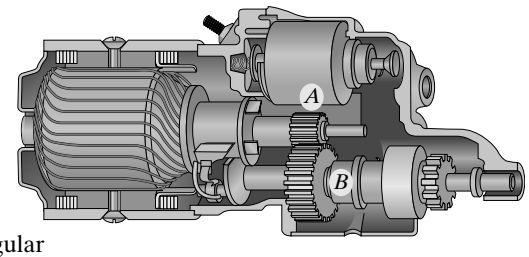

Motion of Gear *A*: Applying the kinematic equation of variable angular acceleration,

$$\int d\omega_A \int \alpha_A dt$$

$$\int_0^{\omega_A} d\omega_A = \int_0^t \left(450t^2 + 60\right)dt$$

$$\omega_A\Big|_0^{\omega_A} = 150t^3 + 60t\Big|_0^t$$

$$\omega_A = \left(150t^3 + 60t\right)\ \text{rad/s}$$

When $t = 2$ s,

$$\omega_A = 150(2)^3 + 60(2) = 1320\ \text{rad/s}$$

$$\int d\theta_A = \int \omega_A\, dt$$

$$\int_0^{\theta_A} d\theta_A = \int_0^t \left(150t^3 + 60t\right)dt$$

$$\theta_A\Big|_0^{\theta_A} = 37.5t^4 + 30t^2\Big|_0^t$$

$$\theta_A = \left(37.5t^4 + 30t^2\right)\ \text{rad}$$

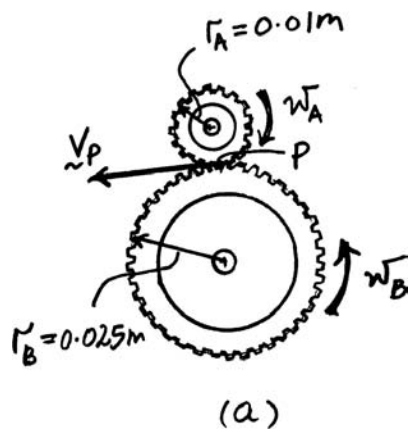

When $t = 2$ s

$$\theta_A = 37.5(2)^4 + 30(2)^2 = 720\ \text{rad}$$

Motion of Gear *B*: Since gear B is meshed with gear A, Fig. a, then

$$v_p = \omega_A r_A = \omega_B r_B$$

$$\omega_B = \omega_A\left(\frac{r_A}{r_B}\right)$$

$$= (1320)\left(\frac{0.01}{0.025}\right)$$

$$= 528\ \text{rad/s} \qquad \textbf{Ans.}$$

$$\theta_B = \theta_A\left(\frac{r_A}{r_B}\right)$$

$$= 720\left(\frac{0.01}{0.025}\right)$$

$$= 288\ \text{rad} \qquad \textbf{Ans.}$$

© 2010 Pearson Education, Inc., Upper Saddle River, NJ. All rights reserved. This material is protected under all copyright laws as they currently exist. No portion of this material may be reproduced, in any form or by any means, without permission in writing from the publisher.

***16–28.** For a short time, gear A of the automobile starter rotates with an angular acceleration of $\alpha_A = (50\omega^{1/2})$ rad/s^2, where ω is in rad/s. Determine the angular velocity of gear B after gear A has rotated 50 rev, starting from rest. The radii of gears A and B are 10 mm and 25 mm, respectively.

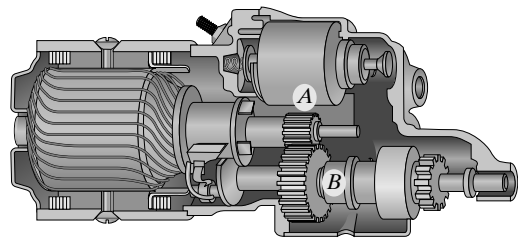

Motion of Gear *A*: We have

$$\int dt = \int \frac{d\omega_A}{\alpha_A}$$

$$\int_0^t dt = \int_0^{\omega_A} \frac{d\omega_A}{50\omega_A{}^{1/2}}$$

$$t\Big|_0^t = \frac{1}{25}\omega_A{}^{1/2}\Big|_0^{\omega_A}$$

$$\omega_A = \left(625t^2\right) \text{ rad/s}$$

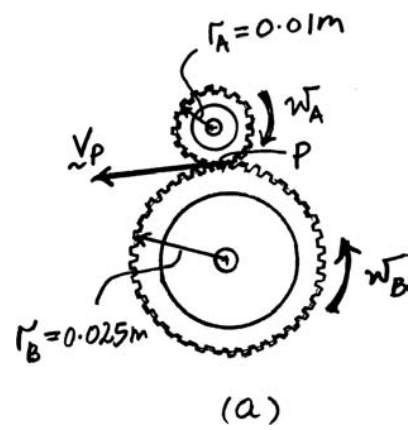

The angular displacement of gear A can be determined using this result.

$$\int d\theta_A = \int \omega_A\, dt$$

$$\int_0^{\theta_A} d\theta_A = \int_0^t \left(625t^2\right)dt$$

$$\theta_A\Big|_0^{\theta_A} = 208.33t^3\Big|_0^t$$

$$\theta_A = \left(208.33t^3\right) \text{ rad}$$

When $\theta_A = 50 \text{ rev}\left(\frac{2\pi \text{ rad}}{1 \text{ rev}}\right) = 100\pi$ rad,

$$100\pi = 208.33t^3$$

$$t = 1.147 \text{ s}$$

Thus, the angular velocity of gear A at $t = 1.147$ s($\theta_A = 100\pi$ rad) is

$$\omega_A = 625(1.147^2) = 821.88 \text{ rad/s}$$

Motion of Gear *B*: Since gear B is meshed with gear A, Fig. a, then

$$v_p = \omega_A r_A = \omega_B r_B$$

$$\omega_B = \omega_A\left(\frac{r_A}{r_B}\right)$$

$$= 821.88\left(\frac{0.01}{0.025}\right)$$

$$= 329 \text{ rad/s} \qquad \textbf{Ans.}$$

© 2010 Pearson Education, Inc., Upper Saddle River, NJ. All rights reserved. This material is protected under all copyright laws as they currently exist. No portion of this material may be reproduced, in any form or by any means, without permission in writing from the publisher.

•16–29. Gear A rotates with a constant angular velocity of $\omega_A = 6$ rad/s. Determine the largest angular velocity of gear B and the speed of point C.

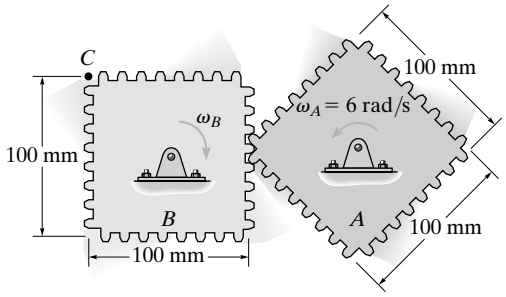

$(r_B)_{\max} = (r_A)_{\max} = 50\sqrt{2}$ mm

$(r_B)_{\min} = (r_A)_{\min} = 50$ mm

When r_A is max., r_B is min.

$\omega_B\,(r_B) = \omega_A\, r_A$

$$(\omega_B)_{\max} = 6\left(\frac{r_A}{r_B}\right) = 6\left(\frac{50\sqrt{2}}{50}\right)$$

$(\omega_B)_{\max} = 8.49$ rad/s **Ans.**

$v_C = (\omega_B)_{\max}\, r_C = 8.49\left(0.05\sqrt{2}\right)$

$v_C = 0.6$ m/s **Ans.**

16–30. If the operator initially drives the pedals at 20 rev/min, and then begins an angular acceleration of 30 rev/min^2, determine the angular velocity of the flywheel F when $t = 3$ s. Note that the pedal arm is fixed connected to the chain wheel A, which in turn drives the sheave B using the fixed connected clutch gear D. The belt wraps around the sheave then drives the pulley E and fixed-connected flywheel.

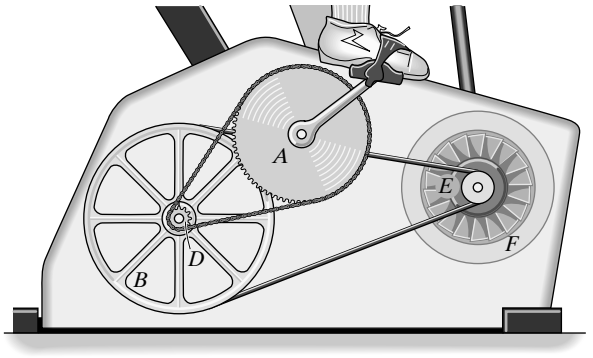

$r_A = 125$ mm $\quad r_B = 175$ mm
$r_D = 20$ mm $\quad r_E = 30$ mm

$\omega = \omega_0 + \alpha_c t$

$$\omega_A = 20 + 30\left(\frac{3}{60}\right) = 21.5 \text{ rev/min}$$

$\omega_A\, r_A = \omega_D\, r_D$

$21.5(125) = \omega_D\,(20)$

$\omega_D = \omega_B = 134.375$

$\omega_B\, r_B = \omega_E\, r_E$

$134.375(175) = \omega_E(30)$

$\omega_E = 783.9$ rev/min

$\omega_F = 784$ rev/min **Ans.**

© 2010 Pearson Education, Inc., Upper Saddle River, NJ. All rights reserved. This material is protected under all copyright laws as they currently exist. No portion of this material may be reproduced, in any form or by any means, without permission in writing from the publisher.

16–31. If the operator initially drives the pedals at 12 rev/min, and then begins an angular acceleration of 8 rev/min^2, determine the angular velocity of the flywheel F after the pedal arm has rotated 2 revolutions. Note that the pedal arm is fixed connected to the chain wheel A, which in turn drives the sheave B using the fixed-connected clutch gear D. The belt wraps around the sheave then drives the pulley E and fixed-connected flywheel.

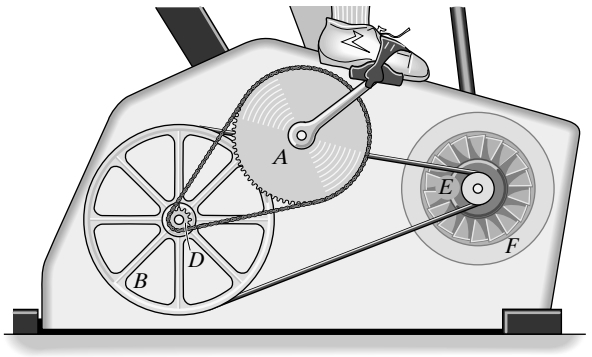

$r_A = 125$ mm $\quad r_B = 175$ mm
$r_D = 20$ mm $\quad r_E = 30$ mm

$\omega^2 = \omega_0^2 + 2\alpha_c(\theta - \theta_0)$

$\omega^2 = (12)^2 + 2(8)(2 - 0)$

$\omega = 13\,266$ rev/min

$\omega_A r_A = \omega_D r_D$

$13\,266(125) = \omega_D(20)$

$\omega_D = \omega_D = 82.916$

$\omega_B r_B = \omega_E r_E$

$82.916(175) = \omega_E(30)$

$\omega_E = 483.67$

$\omega_F = 484$ rev/min **Ans.**

© 2010 Pearson Education, Inc., Upper Saddle River, NJ. All rights reserved. This material is protected under all copyright laws as they currently exist. No portion of this material may be reproduced, in any form or by any means, without permission in writing from the publisher.

***16–32.** The drive wheel A has a constant angular velocity of ω_A. At a particular instant, the radius of rope wound on each wheel is as shown. If the rope has a thickness T, determine the angular acceleration of wheel B.

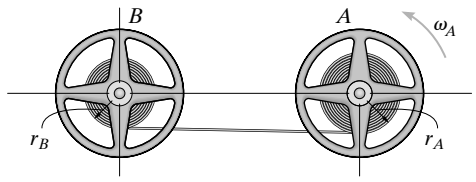

Angular Motion: The angular velocity between wheels A and B can be related by

$$\omega_A r_A = \omega_B r_B \text{ or } \omega_B = \frac{r_A}{r_B}\omega_A$$

During time dt, the volume of the tape exchange between the wheel is

$$-2\pi r_B\, dr_B = 2\pi r_A\, dr_A$$

$$dr_B = -\left(\frac{r_A}{r_B}\right) dr_A \qquad \textbf{[1]}$$

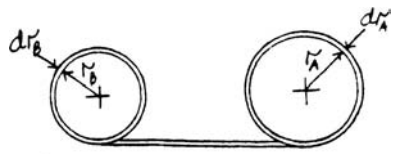

Applying Eq. 16–2 with $\omega_B = \frac{r_A}{r_B}\omega_A$, we have

$$\alpha_B = \frac{d\omega_B}{dt} = \frac{d}{dt}\left[\frac{r_A}{r_B}\omega_A\right] = \omega_A\left(\frac{1}{r_B}\frac{dr_A}{dt} - \frac{r_A}{r_B^2}\frac{dr_B}{dt}\right) \qquad \textbf{[2]}$$

Substituting Eq.[1] into [2] yields

$$\alpha_B = \omega_A\left(\frac{r_A^2 + r_B^2}{r_B^3}\right)\frac{dr_A}{dt} \qquad \textbf{[3]}$$

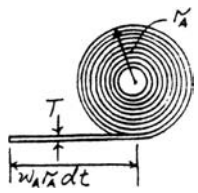

The volume of tape coming out from wheel A in time dt is

$$2\pi r_A\, dr_A = (\omega_A r_A\, dt)\, T$$

$$\frac{dr_A}{dt} = \frac{\omega_A T}{2\pi} \qquad \textbf{[4]}$$

Substitute Eq.[4] into [3] gives

$$\alpha_B = \frac{\omega_A^2 T}{2\pi r_B^3}\left(r_A^2 + r_B^2\right) \qquad \textbf{Ans.}$$

© 2010 Pearson Education, Inc., Upper Saddle River, NJ. All rights reserved. This material is protected under all copyright laws as they currently exist. No portion of this material may be reproduced, in any form or by any means, without permission in writing from the publisher.

•16–33. If the rod starts from rest in the position shown and a motor drives it for a short time with an angular acceleration of $\alpha = (1.5e^t)$ rad/s^2, where t is in seconds, determine the magnitude of the angular velocity and the angular displacement of the rod when $t = 3$ s. Locate the point on the rod which has the greatest velocity and acceleration, and compute the magnitudes of the velocity and acceleration of this point when $t = 3$ s. The rod is defined by $z = 0.25 \sin(\pi y)$ m, where the argument for the sine is given in radians and y is in meters.

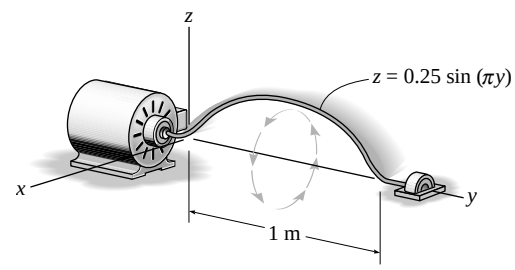

$$d\omega = \alpha\, dt$$

$$\int_0^{\omega} d\omega = \int_0^t 1.5e^t\, dt$$

$$\omega = 1.5e^t\Big|_0^t = 1.5\left[e^t - 1\right]$$

$$d\theta = \omega\, dt$$

$$\int_0^{\theta} d\theta = 1.5\int_0^t \left[e^t - 1\right] dt$$

$$\theta = 1.5\left[e^t - t\right]_0^t = 1.5\left[e^t - t - 1\right]$$

When $t = 3$ s

$$\omega = 1.5\left[e^3 - 1\right] = 28.63 = 28.6 \text{ rad/s} \qquad \textbf{Ans.}$$

$$\theta = 1.5\left[e^3 - 3 - 1\right] = 24.1 \text{ rad} \qquad \textbf{Ans.}$$

The point having the greatest velocity and acceleration is located furthest from the axis of rotation. This is at $y = 0.5$ m, where $z = 0.25 \sin(\pi 0.5) = 0.25$ m.

Hence,

$$v_P = \omega(z) = 28.63(0.25) = 7.16 \text{ m/s} \qquad \textbf{Ans.}$$

$$(a_t)_P = \alpha(z) = \left(1.5e^3\right)(0.25) = 7.532 \text{ m/s}^2$$

$$(a_n)_P = \omega^2(z) = (28.63)^2(0.25) = 204.89 \text{ m/s}^2$$

$$a_P = \sqrt{(a_t)_P^2 + (a_n)_P^2} = \sqrt{(7.532)^2 + (204.89)^2}$$

$$a_P = 205 \text{ m/s}^2 \qquad \textbf{Ans.}$$

© 2010 Pearson Education, Inc., Upper Saddle River, NJ. All rights reserved. This material is protected under all copyright laws as they currently exist. No portion of this material may be reproduced, in any form or by any means, without permission in writing from the publisher.

16–34. If the shaft and plate rotate with a constant angular velocity of $\omega = 14$ rad/s, determine the velocity and acceleration of point C located on the corner of the plate at the instant shown. Express the result in Cartesian vector form.

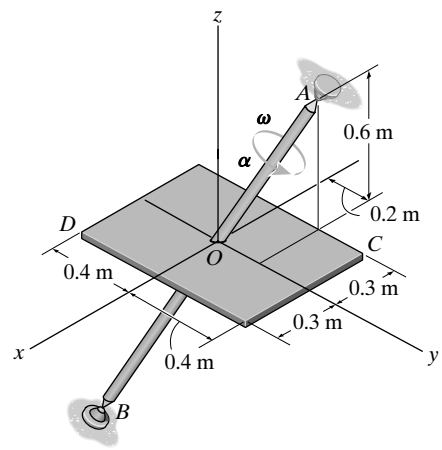

We will first express the angular velocity ω of the plate in Cartesian vector form. The unit vector that defines the direction of ω is

$$\mathbf{u}_{OA} = \frac{-0.3\mathbf{i} + 0.2\mathbf{j} + 0.6\mathbf{k}}{\sqrt{(-0.3)^2 + 0.2^2 + 0.6^2}} = -\frac{3}{7}\mathbf{i} + \frac{2}{7}\mathbf{j} + \frac{6}{7}\mathbf{k}$$

Thus,

$$\omega = \omega\mathbf{u}_{OA} = 14\left(-\frac{3}{7}\mathbf{i} + \frac{2}{7}\mathbf{j} + \frac{6}{7}\mathbf{k}\right) = [-6\mathbf{i} + 4\mathbf{j} + 12\mathbf{k}] \text{ rad/s}$$

Since ω is constant

$$\alpha = 0$$

For convenience, $\mathbf{r}_C = [-0.3\mathbf{i} + 0.4\mathbf{j}]$ m is chosen. The velocity and acceleration of point C can be determined from

$$\begin{aligned}\mathbf{v}_C &= \omega \times \mathbf{r}_C \\ &= (-6\mathbf{i} + 4\mathbf{j} + 12\mathbf{k}) \times (-0.3\mathbf{i} + 0.4\mathbf{j}) \\ &= [-4.8\mathbf{i} - 3.6\mathbf{j} - 1.2\mathbf{k}] \text{ m/s} \qquad \textbf{Ans.}\end{aligned}$$

and

$$\begin{aligned}\mathbf{a}_C &= \alpha \times \mathbf{r}_C \\ &= 0 + (-6\mathbf{i} + 4\mathbf{j} + 12\mathbf{k}) \times [(-6\mathbf{i} + 4\mathbf{j} + 12\mathbf{k}) \times (-0.3\mathbf{i} + 0.4\mathbf{j})] \\ &= [38.4\mathbf{i} - 64.8\mathbf{j} + 40.8\mathbf{k}] \text{m/s}^2 \qquad \textbf{Ans.}\end{aligned}$$

© 2010 Pearson Education, Inc., Upper Saddle River, NJ. All rights reserved. This material is protected under all copyright laws as they currently exist. No portion of this material may be reproduced, in any form or by any means, without permission in writing from the publisher.

16–35. At the instant shown, the shaft and plate rotates with an angular velocity of $\omega = 14\text{ rad/s}$ and angular acceleration of $\alpha = 7\text{ rad/s}^2$. Determine the velocity and acceleration of point D located on the corner of the plate at this instant. Express the result in Cartesian vector form.

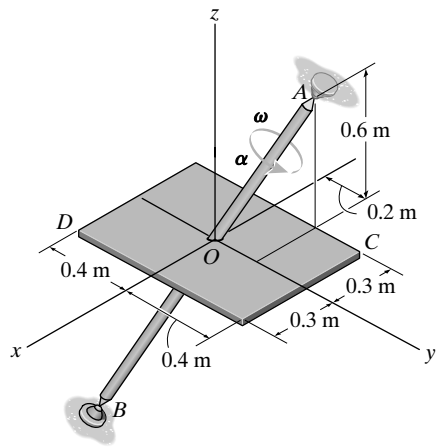

We will first express the angular velocity ω of the plate in Cartesian vector form. The unit vector that defines the direction of ω and α is

$$\mathbf{u}_{OA} = \frac{-0.3\mathbf{i} + 0.2\mathbf{j} + 0.6\mathbf{k}}{\sqrt{(-0.3)^2 + 0.2^2 + 0.6^2}} = -\frac{3}{7}\mathbf{i} + \frac{2}{7}\mathbf{j} + \frac{6}{7}\mathbf{k}$$

Thus,

$$\omega = \omega\mathbf{u}_{OA} = 14\left(-\frac{3}{7}\mathbf{i} + \frac{2}{7}\mathbf{j} + \frac{6}{7}\mathbf{k}\right) = [-6\mathbf{i} + 4\mathbf{j} + 12\mathbf{k}]\text{ rad/s}$$

$$\alpha = \alpha\mathbf{u}_{OA} = 7\left(-\frac{3}{7}\mathbf{i} + \frac{2}{7}\mathbf{j} + \frac{6}{7}\mathbf{k}\right) = [-3\mathbf{i} + 2\mathbf{j} + 6\mathbf{k}]\text{ rad/s}$$

For convenience, $\mathbf{r}_D = [-0.3\mathbf{i} + 0.4\mathbf{j}]$ m is chosen. The velocity and acceleration of point D can be determined from

$$\mathbf{v}_D = \omega \times r_D$$

$$= (-6\mathbf{i} + 4\mathbf{j} + 12\mathbf{k}) \times (-0.3\mathbf{i} + 0.4\mathbf{j})$$

$$= [4.8\mathbf{i} + 3.6\mathbf{j} + 1.2\mathbf{k}]\text{m/s} \qquad \textbf{Ans.}$$

and

$$\mathbf{a}_D = \alpha \times \mathbf{r}_D - \omega^2\,\mathbf{r}_D$$

$$= (-3\mathbf{i} + 2\mathbf{j} + 6\mathbf{k}) \times (-0.3\mathbf{i} + 0.4\mathbf{j}) + (-6\mathbf{i} + 4\mathbf{j} + 12\mathbf{k}) \times [(-6\mathbf{i} + 4\mathbf{j} + 12\mathbf{k}) \times (-0.3\mathbf{i} + 0.4\mathbf{j})]$$

$$= [-36.0\mathbf{i} + 66.6\mathbf{j} + 40.2\mathbf{k}]\text{m/s}^2 \qquad \textbf{Ans.}$$

© 2010 Pearson Education, Inc., Upper Saddle River, NJ. All rights reserved. This material is protected under all copyright laws as they currently exist. No portion of this material may be reproduced, in any form or by any means, without permission in writing from the publisher.

***16–36.** Rod CD presses against AB, giving it an angular velocity. If the angular velocity of AB is maintained at $\omega = 5$ rad/s, determine the required magnitude of the velocity $\mathbf{v}$ of CD as a function of the angle θ of rod AB.

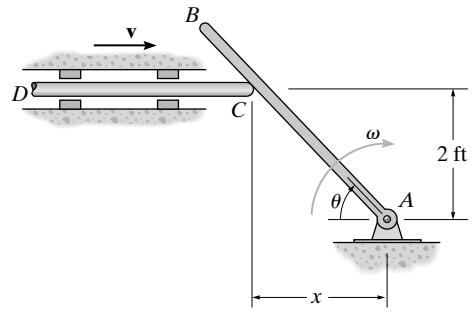

Position Coordinate Equation: From the geometry,

$$x = \frac{2}{\tan\theta} = 2\cot\theta \qquad \textbf{[1]}$$

Time Derivatives: Taking the time derivative of Eq. [1], we have

$$\frac{dx}{dt} = -2\csc^2\theta\frac{d\theta}{dt} \qquad \textbf{[2]}$$

However, $\frac{dx}{dt} = v$ and $\frac{d\theta}{dt} = \omega = 5$ rad/s, then from Eq. [2]

$$v = -2\csc^2\theta(5) = \left(-10\csc^2\theta\right) \qquad \textbf{Ans.}$$

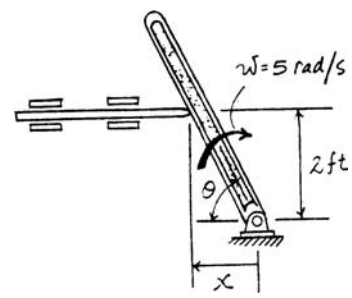

Note: Negative sign indicates that v is directed in the opposite direction to that of positive x.

•16–37. The scaffold S is raised by moving the roller at A toward the pin at B. If A is approaching B with a speed of 1.5 ft/s, determine the speed at which the platform rises as a function of θ. The 4-ft links are pin connected at their midpoint.

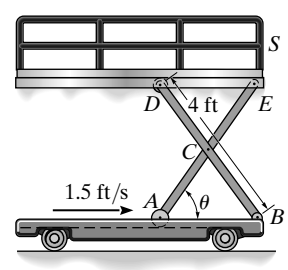

Position Coordinate Equation:

$$x = 4\cos\theta \qquad y = 4\sin\theta$$

Time Derivatives:

$$\dot{x} = -4\sin\theta\dot{\theta} \qquad \text{However,} \quad \dot{x} = -v_A = -1.5 \text{ ft/s}$$

$$-1.5 = -4\sin\theta\dot{\theta} \qquad \dot{\theta} = \frac{0.375}{\sin\theta}$$

$$\dot{y} = v_y = 4\cos\theta\dot{\theta} = 4\cos\theta\left(\frac{0.375}{\sin\theta}\right) = 1.5\cot\theta \qquad \textbf{Ans.}$$

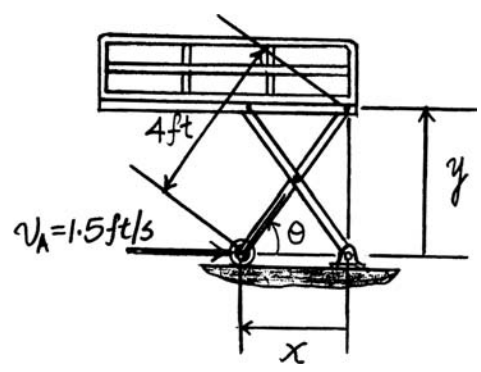

© 2010 Pearson Education, Inc., Upper Saddle River, NJ. All rights reserved. This material is protected under all copyright laws as they currently exist. No portion of this material may be reproduced, in any form or by any means, without permission in writing from the publisher.

16–38. The block moves to the left with a constant velocity $\mathbf{v}_0$. Determine the angular velocity and angular acceleration of the bar as a function of θ.

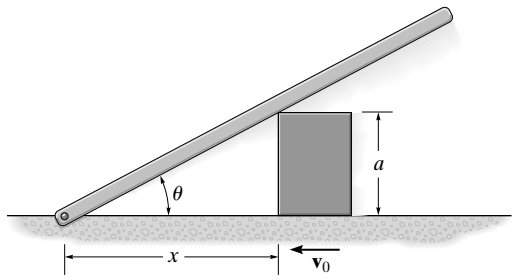

Position Coordinate Equation: From the geometry,

$$x = \frac{a}{\tan\theta} = a\cot\theta \qquad \textbf{[1]}$$

Time Derivatives: Taking the time derivative of Eq. [1], we have

$$\frac{dx}{dt} = -a\csc^2\theta\frac{d\theta}{dt} \qquad \textbf{[2]}$$

Since v_0 is directed toward negative x, then $\frac{dx}{dt} = -v_0$. Also, $\frac{d\theta}{dt} = \omega$.

From Eq.[2],

$$-v_0 = -a\csc^2\theta(\omega)$$

$$\omega = \frac{v_0}{a\csc^2\theta} = \frac{v_0}{a}\sin^2\theta \qquad \textbf{Ans.}$$

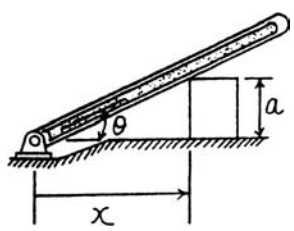

Here, $\alpha = \frac{d\omega}{dt}$. Then from the above expression

$$\alpha = \frac{v_0}{a}(2\sin\theta\cos\theta)\frac{d\theta}{dt} \qquad \textbf{[3]}$$

However, $2\sin\theta\cos\theta = \sin 2\theta$ and $\omega = \frac{d\theta}{dt} = \frac{v_0}{a}\sin^2\theta$. Substitute these values into Eq.[3] yields

$$\alpha = \frac{v_0}{a}\sin 2\theta\left(\frac{v_0}{a}\sin^2\theta\right) = \left(\frac{v_0}{a}\right)^2\sin 2\theta\sin^2\theta \qquad \textbf{Ans.}$$

© 2010 Pearson Education, Inc., Upper Saddle River, NJ. All rights reserved. This material is protected under all copyright laws as they currently exist. No portion of this material may be reproduced, in any form or by any means, without permission in writing from the publisher.

16–39. Determine the velocity and acceleration of platform P as a function of the angle θ of cam C if the cam rotates with a constant angular velocity $\boldsymbol{\omega}$. The pin connection does not cause interference with the motion of P on C. The platform is constrained to move vertically by the smooth vertical guides.

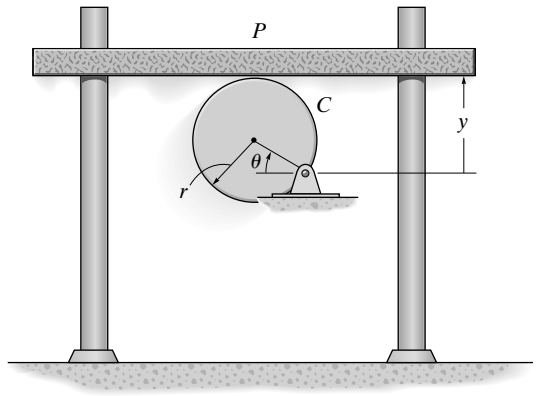

Position Coordinate Equation: From the geometry.

$$y = r \sin\theta + r \qquad \textbf{[1]}$$

Time Derivatives: Taking the time derivative of Eq. [1], we have

$$\frac{dy}{dt} = r\cos\theta\frac{d\theta}{dt} \qquad \textbf{[2]}$$

However $v = \dfrac{dy}{dt}$ and $\omega = \dfrac{d\theta}{dt}$. From Eq.[2],

$$v = \omega r \cos\theta \qquad \textbf{Ans.}$$

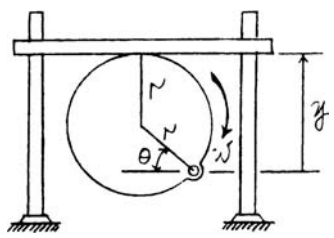

Taking the time derivative of the above expression, we have

$$\frac{dv}{dt} = r\left[\omega(-\sin\theta)\frac{d\theta}{dt} + \cos\theta\frac{d\omega}{dt}\right]$$

$$= r\left(\cos\theta\frac{d\omega}{dt} - \omega^2\sin\theta\right) \qquad \textbf{[4]}$$

However $a = \dfrac{dv}{dt}$ and $\alpha = \dfrac{d\omega}{dt} = 0$. From Eq.[4],

$$a = -\omega^2 r \sin\theta \qquad \textbf{Ans.}$$

Note: Negative sign indicates that a is directed in the opposite direction to that of positive y.

© 2010 Pearson Education, Inc., Upper Saddle River, NJ. All rights reserved. This material is protected under all copyright laws as they currently exist. No portion of this material may be reproduced, in any form or by any means, without permission in writing from the publisher.

***16–40.** Disk A rolls without slipping over the surface of the *fixed* cylinder B. Determine the angular velocity of A if its center C has a speed $v_C = 5$ m/s. How many revolutions will A rotate about its center just after link DC completes one revolution?

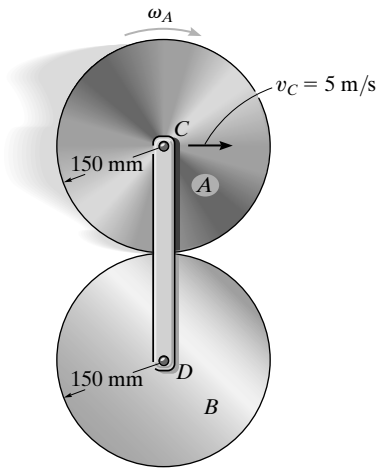

As shown by the construction, as A rolls through the arc $s = \theta_A r$, the center of the disk moves through the same distance $s' = s$. Hence,

$$s = \theta_A r$$

$$\dot{s} = \dot{\theta}_A r$$

$$5 = \omega_A (0.15)$$

$$\omega_A = 33.3 \text{ rad/s} \qquad \textbf{Ans.}$$

Link

$$s' = 2r\theta_{CD} = s = \theta_A r$$

$$2\theta_{CD} = \theta_A$$

Thus, A makes 2 revolutions for each revolution of CD. **Ans.**

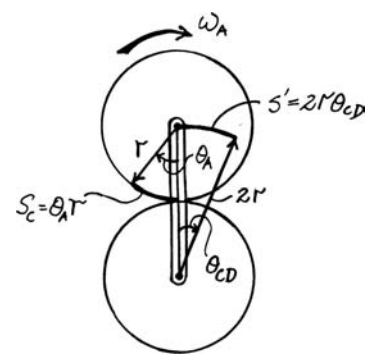

© 2010 Pearson Education, Inc., Upper Saddle River, NJ. All rights reserved. This material is protected under all copyright laws as they currently exist. No portion of this material may be reproduced, in any form or by any means, without permission in writing from the publisher.

•16–41. Crank AB rotates with a constant angular velocity of 5 rad/s. Determine the velocity of block C and the angular velocity of link BC at the instant $\theta = 30°$.

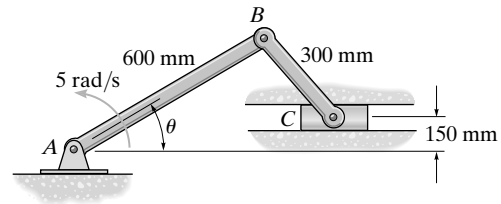

Position Coordinate Equation: From the geometry,

$$x = 0.6 \cos\theta + 0.3 \cos\phi \qquad \textbf{[1]}$$

$$0.6 \sin\theta = 0.15 + 0.3 \sin\phi \qquad \textbf{[2]}$$

Eliminate ϕ from Eqs. [1] and [2] yields

$$x = 0.6 \cos\theta + 0.3\sqrt{2 \sin\theta - 4 \sin^2\theta + 0.75} \qquad \textbf{[3]}$$

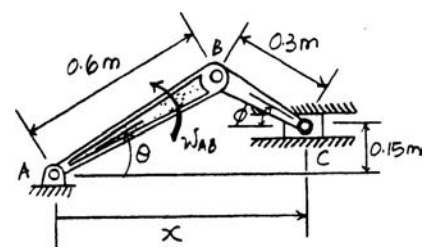

Time Derivatives: Taking the time derivative of Eq. [3], we have

$$\frac{dx}{dt} = \left[-0.6 \sin\theta + \frac{0.15(2 \cos\theta - 4 \sin 2\theta)}{\sqrt{2 \sin\theta - 4 \sin^2\theta + 0.75}}\right]\frac{d\theta}{dt} \qquad \textbf{[4]}$$

However, $\frac{dx}{dt} = v_C$ and $\frac{d\theta}{dt} = \omega_{AB}$, then from Eq.[4]

$$v_C = \left[-0.6 \sin\theta + \frac{0.15(2 \cos\theta - 4 \sin 2\theta)}{\sqrt{2 \sin\theta - 4 \sin^2\theta + 0.75}}\right]\omega_{AB} \qquad \textbf{[5]}$$

At the instant $\theta = 30°$, $\omega_{AB} = 5$ rad/s. Substitute into Eq.[5] yields

$$v_C = \left[-0.6 \sin 30° + \frac{0.15(2 \cos 30° - 4 \sin 60°)}{\sqrt{2 \sin 30° - 4 \sin^2 30° + 0.75}}\right](5) = -3.00 \text{ m/s} \qquad \textbf{Ans.}$$

Taking the time derivative of Eq. [2], we have

$$0.6 \cos\theta \frac{d\theta}{dt} = 0.3 \cos\phi \frac{d\phi}{dt} \qquad \textbf{[6]}$$

However, $\frac{d\phi}{dt} = \omega_{BC}$ and $\frac{d\theta}{dt} = \omega_{AB}$, then from Eq.[6]

$$\omega_{BC} = \left(\frac{2 \cos\theta}{\cos\phi}\right)\omega_{AB} \qquad \textbf{[7]}$$

At the instant $\theta = 30°$, from Eq.[2], $\phi = 30.0°$. From Eq.[7]

$$\omega_{BC} = \left(\frac{2 \cos 30°}{\cos 30.0°}\right)(5) = 10.0 \text{ rad/s} \qquad \textbf{Ans.}$$

Note: Negative sign indicates that v_C is directed in the opposite direction to that of positive x.

© 2010 Pearson Education, Inc., Upper Saddle River, NJ. All rights reserved. This material is protected under all copyright laws as they currently exist. No portion of this material may be reproduced, in any form or by any means, without permission in writing from the publisher.

16–42. The pins at A and B are constrained to move in the vertical and horizontal tracks. If the slotted arm is causing A to move downward at $\mathbf{v}_A$, determine the velocity of B as a function of θ.

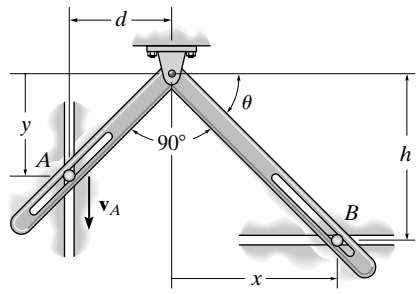

Position Coordinate Equation:

$$\tan\theta = \frac{h}{x} = \frac{d}{y}$$

$$x = \left(\frac{h}{d}\right)y$$

Time Derivatives:

$$\dot{x} = \left(\frac{h}{d}\right)\dot{y}$$

$$v_B = \left(\frac{h}{d}\right)v_A \qquad \textbf{Ans.}$$

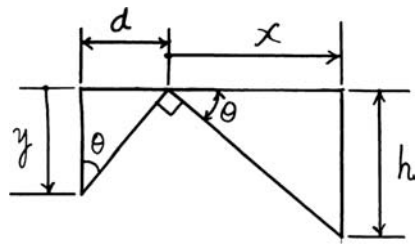

© 2010 Pearson Education, Inc., Upper Saddle River, NJ. All rights reserved. This material is protected under all copyright laws as they currently exist. No portion of this material may be reproduced, in any form or by any means, without permission in writing from the publisher.

16–43. End A of the bar moves to the left with a constant velocity $\mathbf{v}_A$. Determine the angular velocity $\boldsymbol{\omega}$ and angular acceleration $\boldsymbol{\alpha}$ of the bar as a function of its position x.

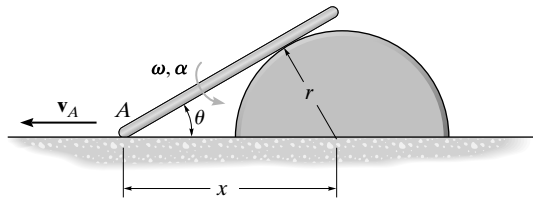

Position Coordinate Equation: From the geometry.

$$x = \frac{r}{\sin\theta} \qquad \textbf{[1]}$$

Time Derivatives: Taking the time derivative of Eq.[1], we have

$$\frac{dx}{dt} = -\frac{r\cos\theta\, d\theta}{r\sin^2\theta\, dt} \qquad \textbf{[2]}$$

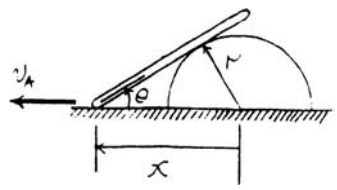

Since v_0 is directed toward positive x, then $\frac{dx}{dt} = v_A$. Also, $\frac{d\theta}{dt} = \omega$. From the geometry, $\sin\theta = \frac{r}{x}$ and $\cos\theta = \frac{\sqrt{x^2 - r^2}}{x}$. Substitute these values into Eq.[2], we have

$$v_A = -\left(\frac{r\left(\sqrt{x^2 - r^2}/x\right)}{(r/x)^2}\right)\omega$$

$$\omega = -\left(\frac{r}{x\sqrt{x^2 - r^2}}\right)v_A \qquad \textbf{Ans.}$$

Taking the time derivative of Eq. [2], we have

$$\frac{d^2x}{dt^2} = \frac{r}{\sin^2\theta} = \left[\left(\frac{1 + \cos^2\theta}{\sin\theta}\right)\left(\frac{d\theta}{dt}\right)^2 - \cos\theta\frac{d^2\theta}{dt^2}\right] \qquad \textbf{[3]}$$

Here, $\frac{d^2x}{dt^2} = a = 0$ and $\frac{d^2\theta}{dt^2} = \alpha$. Substitute into Eq.[3], we have

$$0 = \frac{r}{\sin^2\theta}\left[\left(\frac{1 + \cos^2\theta}{\sin\theta}\right)\omega^2 - \alpha\cos\theta\right]$$

$$\alpha = \left(\frac{1 + \cos^2\theta}{\sin\theta\cos\theta}\right)\omega^2 \qquad \textbf{[4]}$$

However, $\sin\theta = \frac{r}{x}$, $\cos\theta = \frac{\sqrt{x^2 - r^2}}{x}$ and $\omega = -\left(\frac{r}{x\sqrt{x^2 - r^2}}\right)v_A$. Substitute these values into Eq.[4] yields

$$\alpha = \left[\frac{r(2x^2 - r^2)}{x^2(x^2 - r^2)^{3/2}}\right]v_A^2 \qquad \textbf{Ans.}$$

© 2010 Pearson Education, Inc., Upper Saddle River, NJ. All rights reserved. This material is protected under all copyright laws as they currently exist. No portion of this material may be reproduced, in any form or by any means, without permission in writing from the publisher.

***16–44.** Determine the velocity and acceleration of the plate at the instant $\theta = 30°$, if at this instant the circular cam is rotating about the fixed point O with an angular velocity $\omega = 4$ rad/s and an angular acceleration $\alpha = 2$ rad/s^2.

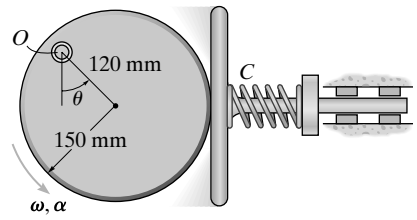

Position Coordinate Equation: From the geometry,

$$x = 0.12 \sin\theta + 0.15 \qquad \textbf{[1]}$$

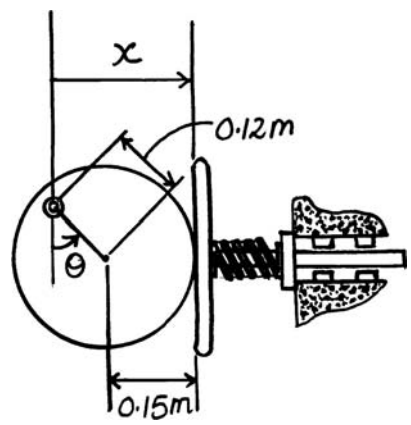

Time Derivatives: Taking the time derivative of Eq. [1], we have

$$\frac{dx}{dt} = 0.12 \cos\theta \frac{d\theta}{dt} \qquad \textbf{[2]}$$

However $v = \dfrac{dx}{dt}$ and $\omega = \dfrac{d\theta}{dt}$. From Eq.[2],

$$v = 0.12\omega \cos\theta \qquad \textbf{[3]}$$

At the instant $\theta = 30°$, $\omega = 4$ rad/s, then substitute these values into Eq.[3] yields

$$v = 0.12(4) \cos 30° = 0.416 \text{ m/s} \qquad \textbf{Ans.}$$

Taking the time derivative of Eq. [3], we have

$$\frac{dv}{dt} = 0.12\left[\omega(-\sin\theta)\frac{d\theta}{dt} + \cos\theta\frac{d\omega}{dt}\right]$$

$$= 0.12\left(\cos\theta\frac{d\omega}{dt} - \omega^2 \sin\theta\right) \qquad \textbf{[4]}$$

However $a = \dfrac{dv}{dt}$ and $\alpha = \dfrac{d\omega}{dt}$. From Eq.[4],

$$a = 0.12\left(\alpha\cos\theta - \omega^2 \sin\theta\right) \qquad \textbf{[5]}$$

At the instant $\theta = 30°$, $\omega = 4$ rad/s and $\alpha = 2$ rad/s^2, then substitute these values into Eq.[5] yields

$$a = 0.12\left(2\cos 30° - 4^2 \sin 30°\right) = -0.752 \text{ m/s}^2 \qquad \textbf{Ans.}$$

Note: Negative sign indicates that a is directed in the opposite direction to that of positive x.

© 2010 Pearson Education, Inc., Upper Saddle River, NJ. All rights reserved. This material is protected under all copyright laws as they currently exist. No portion of this material may be reproduced, in any form or by any means, without permission in writing from the publisher.

•16–45. At the instant $\theta = 30°$, crank AB rotates with an angular velocity and angular acceleration of $\omega = 10$ rad/s and $\alpha = 2$ rad/s^2, respectively. Determine the velocity and acceleration of the slider block C at this instant. Take $a = b = 0.3$ m.

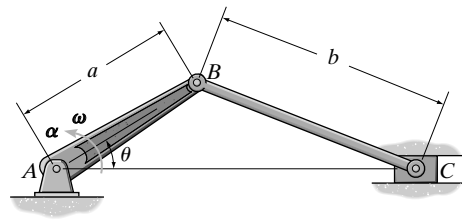

Position Coordinates: Due to symmetry, $\phi = \theta$. Thus, from the geometry shown in Fig. *a*,

$$x_C = 2[0.3 \cos \theta]\text{m} = 0.6 \cos \theta \text{ m}$$

Time Derivative: Taking the time derivative,

$$v_C = \dot{x}_C = \left(-0.6 \sin \theta\dot{\theta}\right)\text{m/s} \qquad \textbf{(1)}$$

When $\theta = 30°$, $\dot{\theta} = \omega = 10$ rad/s Thus,

$$v_C = -0.6 \sin 30°(10) = -3 \text{ m/s} = 3 \text{ m/s} \leftarrow \qquad \textbf{Ans.}$$

The time derivative of Eq. (1) gives

$$a_C = \ddot{x}_C = -0.6\left(\sin \theta\ddot{\theta} + \cos \theta\dot{\theta}^2\right) \text{ m/s}^2$$

When $\theta = 30°$, $\ddot{\theta} = \alpha = 2$ rad/s^2, and $\dot{\theta} = 10$ rad/s. Thus,

$$a_C = -0.6\left[\sin 30°(2) + \cos 30°(10^2)\right]$$

$$= -52.6 \text{ m/s}^2 = 52.6 \text{ m/s}^2 \leftarrow \qquad \textbf{Ans.}$$

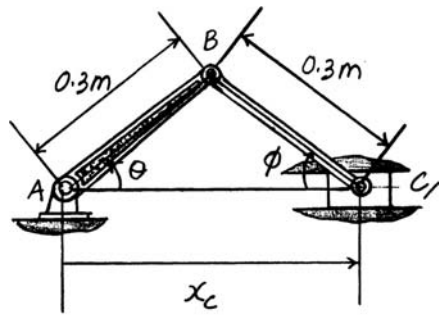

(a)

The negative sign indicates that $\mathbf{v}_C$ and $\mathbf{a}_C$ are in the negative sense of x_C.

© 2010 Pearson Education, Inc., Upper Saddle River, NJ. All rights reserved. This material is protected under all copyright laws as they currently exist. No portion of this material may be reproduced, in any form or by any means, without permission in writing from the publisher.

16–46. At the instant $\theta = 30°$, crank AB rotates with an angular velocity and angular acceleration of $\omega = 10$ rad/s and $\alpha = 2$ rad/s^2, respectively. Determine the angular velocity and angular acceleration of the connecting rod BC at this instant. Take $a = 0.3$ m and $b = 0.5$ m.

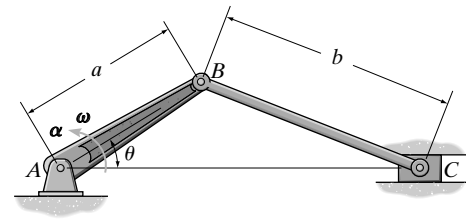

Position Coordinates: The angles θ and ϕ can be related using the law of sines and referring to the geometry shown in Fig. *a*.

$$\frac{\sin\phi}{0.3} = \frac{\sin\theta}{0.5}$$

$$\sin\phi = 0.6\sin\theta \qquad \textbf{(1)}$$

When $\theta = 30°$,

$$\phi = \sin^{-1}(0.6\sin 30°) = 17.46°$$

Time Derivative: Taking the time derivative of Eq. (1),

$$\cos\phi\dot{\phi} = 0.6\cos\theta\dot{\theta} \qquad \textbf{(2)}$$

$$\omega_{BC} = \dot{\phi} = \frac{0.6\cos\theta}{\cos\phi}\dot{\theta}$$

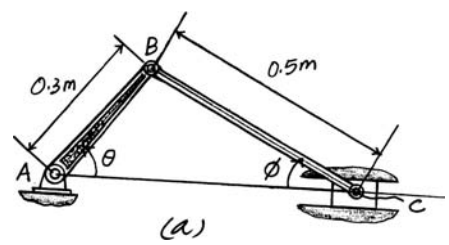

When $\theta = 30°$, $\phi = 17.46°$ and $\dot{\theta} = 10$ rad/s,

$$\omega_{BC} = \dot{\phi} = \frac{0.6\cos 30°}{\cos 17.46°}(10) = 5.447 \text{ rad/s} = 5.45 \text{ rad/s} \qquad \textbf{Ans.}$$

The time derivative of Eq. (2) gives

$$\cos\phi\ddot{\phi} - \sin\phi\dot{\phi}^2 = 0.6\left(\cos\theta\ddot{\theta} - \sin\theta\dot{\theta}^2\right)$$

$$\alpha_{BC} = \ddot{\phi} = \frac{0.6\left(\cos\theta\ddot{\theta} - \sin\theta\dot{\theta}^2\right) + \sin\phi\dot{\phi}^2}{\cos\phi}$$

When $\theta = 30°$, $\phi = 17.46°$, $\dot{\theta} = 10$ rad/s, $\dot{\phi} = 5.447$ rad/s and $\ddot{\theta} = \alpha = 2$ rad/s^2,

$$\alpha_{BC} = \frac{0.6\left[\cos 30°(2) - \sin 30°(10^2)\right] + \sin 17.46°(5.447^2)}{\cos 17.46°}$$

$$= -21.01 \text{ rad/s}^2 \qquad \textbf{Ans.}$$

The negative sign indicates that α_{BC} acts counterclockwise.

© 2010 Pearson Education, Inc., Upper Saddle River, NJ. All rights reserved. This material is protected under all copyright laws as they currently exist. No portion of this material may be reproduced, in any form or by any means, without permission in writing from the publisher.

16–47. The bridge girder G of a bascule bridge is raised and lowered using the drive mechanism shown. If the hydraulic cylinder AB shortens at a constant rate of 0.15 m/s, determine the angular velocity of the bridge girder at the instant $\theta = 60°$.

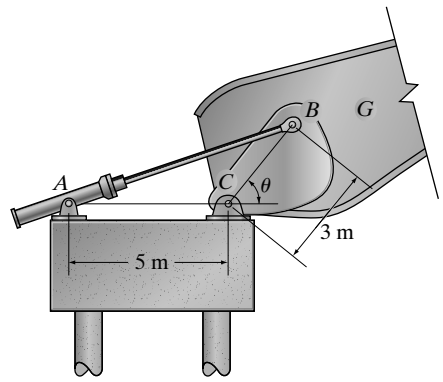

Position Coordinates: Applying the law of cosines to the geometry shown in Fig. *a*,

$$s^2 = 3^2 + 5^2 - 2(3)(5)\cos\left(180° - \theta\right)$$

$$s^2 = 34 - 30\cos\left(180° - \theta\right)$$

However, $\cos\left(180° - \theta\right) = -\cos\theta$. Thus,

$$s^2 = 34 + 30\cos\theta$$

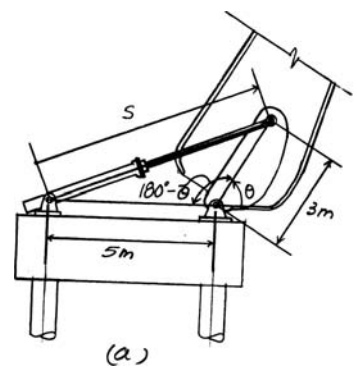

Time Derivatives: Taking the time derivative,

$$2s\dot{s} = 0 + 30\left(-\sin\theta\dot{\theta}\right)$$

$$s\dot{s} = -15\sin\theta\dot{\theta} \qquad \textbf{(1)}$$

When $\theta = 60°$, $s = \sqrt{34 + 30\cos 60°} = 7$ m. Also, $\dot{s} = -0.15$ m/s since $\dot{s}$ is directed towards the negative sense of s. Thus, Eq. (1) gives

$$7\left(-0.15\right) = -15\sin 60°\dot{\theta}$$

$$\omega = \dot{\theta} = 0.0808 \text{ rad/s} \qquad \textbf{Ans.}$$

© 2010 Pearson Education, Inc., Upper Saddle River, NJ. All rights reserved. This material is protected under all copyright laws as they currently exist. No portion of this material may be reproduced, in any form or by any means, without permission in writing from the publisher.

***16–48.** The man pulls on the rope at a constant rate of 0.5 m/s. Determine the angular velocity and angular acceleration of beam AB when $\theta = 60°$. The beam rotates about A. Neglect the thickness of the beam and the size of the pulley.

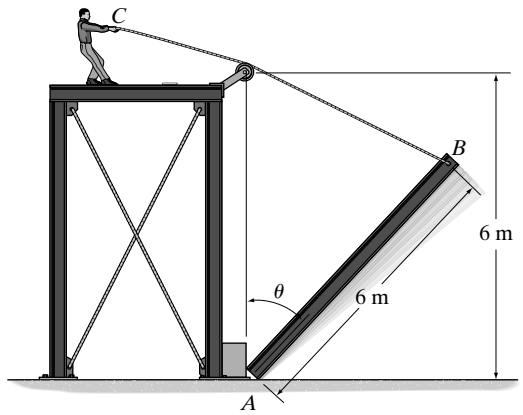

Position Coordinates: Applying the law of cosines to the geometry,

$$s^2 = 6^2 + 6^2 - 2(6)(6)\cos\theta$$

$$s^2 = \left(72 - 72\cos\theta\right)\text{m}^2$$

Time Derivatives: Taking the time derivative,

$$2s\dot{s} = 0 - 72\left(-\sin\theta\dot{\theta}\right)$$

$$s\dot{s} = 36\sin\theta\dot{\theta} \qquad \textbf{(1)}$$

Here, $\dot{s} = -0.5$ m/s since $\dot{s}$ acts in the negative sense of s. When $\theta = 60°$, $s = \sqrt{72 - 72\cos 60°} = 6$ m. Thus, Eq. (1) gives

$$6\left(-0.5\right) = 36\sin 60°\dot{\theta}$$

$$\omega = \dot{\theta} = -0.09623\,\text{rad/s} - 0.0962\,\text{rad/s} \qquad \textbf{Ans.}$$

The negative sign indicates that ω acts in the negative rotational sense of θ. The time derivative of Eq.(1) gives

$$s\ddot{s} + \dot{s}^2 = 36\left(\sin\theta\ddot{\theta} + \cos\theta\dot{\theta}^2\right) \qquad \textbf{(2)}$$

Since $\dot{s}$ is constant, $\ddot{s} = 0$. When $\theta = 60°$.

$$6(0) + (-0.5)^2 = 36\left[\sin 60°\,\ddot{\theta} + \cos 60°\left(-0.09623\right)^2\right]$$

$$\alpha = \ddot{\theta} = 0.00267\,\text{rad/s}^2 \qquad \textbf{Ans.}$$

© 2010 Pearson Education, Inc., Upper Saddle River, NJ. All rights reserved. This material is protected under all copyright laws as they currently exist. No portion of this material may be reproduced, in any form or by any means, without permission in writing from the publisher.

•16–49. Peg B attached to the crank AB slides in the slots mounted on follower rods, which move along the vertical and horizontal guides. If the crank rotates with a constant angular velocity of $\omega = 10$ rad/s, determine the velocity and acceleration of rod CD at the instant $\theta = 30°$.

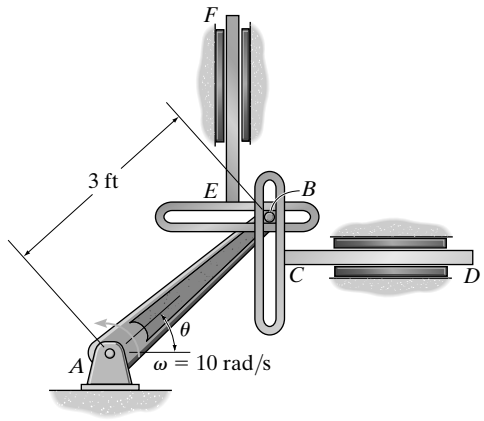

Position Coordinates: From the geometry shown in Fig.a,

$$x_B = 3\cos\theta \text{ ft}$$

Time Derivative: Taking the time derivative,

$$v_{CD} = \dot{x}_B = -3\sin\theta\dot{\theta} \text{ ft/s} \qquad \textbf{(1)}$$

Here, $\dot{\theta} = \omega = 10$ rad/s since ω acts in the positive rotational sense of θ. When $\theta = 30°$,

$$v_{CD} = -3\sin 30°\left(10\right) = -15 \text{ ft/s} = 15 \text{ ft/s} \leftarrow \qquad \textbf{Ans.}$$

Taking the time derivative of Eq.(1) gives

$$a_{CD} = \ddot{x}_B = -3\left(\sin\theta\ddot{\theta} + \cos\theta\dot{\theta}^2\right)$$

Since ω is constant, $\ddot{\theta} = \alpha = 0$. When $\theta = 30°$,

$$a_{CD} = -3\left[\sin 30°(0) + \cos 30°\,(10^2)\right]$$

$$= -259.80 \text{ ft/s} = 260 \text{ ft/s}^2 \leftarrow \qquad \textbf{Ans.}$$

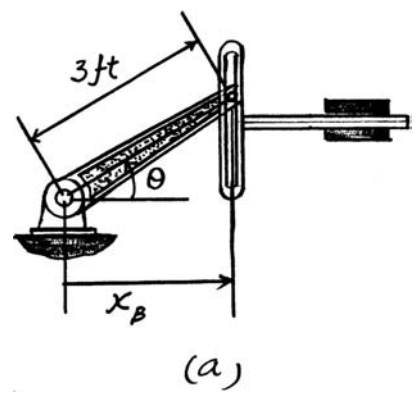

The negative signs indicates that $\mathbf{v}_{CD}$ and $\mathbf{a}_{CD}$ act towards the negative sense of x_B.

© 2010 Pearson Education, Inc., Upper Saddle River, NJ. All rights reserved. This material is protected under all copyright laws as they currently exist. No portion of this material may be reproduced, in any form or by any means, without permission in writing from the publisher.

16–50. Peg B attached to the crank AB slides in the slots mounted on follower rods, which move along the vertical and horizontal guides. If the crank rotates with a constant angular velocity of $\omega = 10\,\text{rad/s}$, determine the velocity and acceleration of rod EF at the instant $\theta = 30°$.

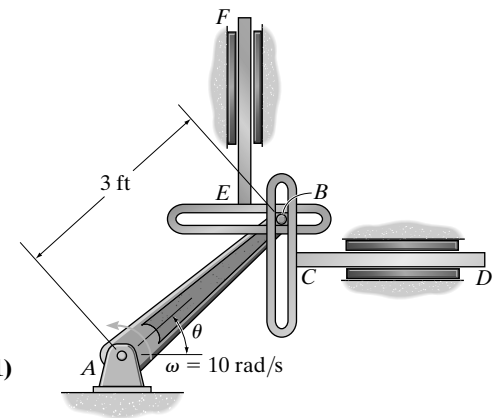

Position Coordinates: From the geometry shown in Fig.*a*,

$$y_B = 3\sin\theta\,\text{ft}$$

Time Derivatives: Taking the time derivative,

$$v_{EF} = \dot{y}_B = 3\cos\theta\dot{\theta}\,\text{ft/s} \qquad \textbf{(1)}$$

Here, $\dot{\theta} = \omega = 10\,\text{rad/s}$ since ω acts in the positive rotational sense of θ. When $\theta = 30°$,

$$v_{EF} = 3\cos 30°(10) = 25.98\,\text{ft/s} = 26\,\text{ft/s}\uparrow \qquad \textbf{Ans.}$$

The time derivative of Eq.(1) gives

$$a_{EF} = \ddot{y}_B = 3\left[\cos\theta\ddot{\theta} - \sin\theta\dot{\theta}^2\right]\text{ft/s}^2$$

Since ω is constant, $\ddot{\theta} = \alpha = 0$. When $\theta = 30°$,

$$a_{EF} = 3\left[\cos 30°(0) - \sin 30°(10^2)\right]$$
$$= -150\,\text{ft/s}^2 = 150\,\text{ft/s}^2\downarrow \qquad \textbf{Ans.}$$

The negative signs indicates that $\mathbf{a}_{EF}$ acts towards the negative sense of y_B.

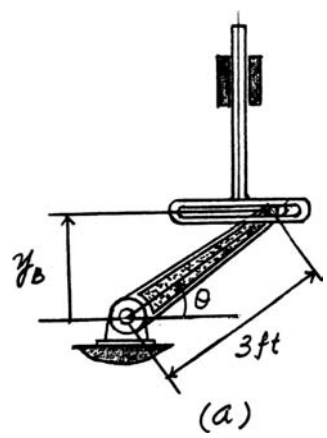

16–51. If the hydraulic cylinder AB is extending at a constant rate of 1 ft/s, determine the dumpster's angular velocity at the instant $\theta = 30°$.

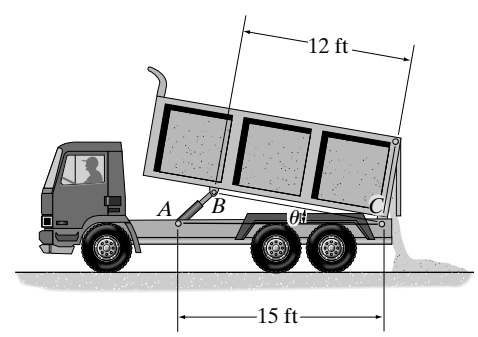

Position Coordinates: Applying the law of cosines to the geometry shown in Fig. *a*,

$$s^2 = 15^2 + 12^2 - 2(15)(12)\cos\theta$$

$$s^2 = (369 - 360\cos\theta)\,\text{ft}^2 \qquad \textbf{(1)}$$

Time Derivatives: Taking the time derivative,

$$2s\dot{s} = 360\sin\theta\dot{\theta}$$

$$s\dot{s} = 180\sin\theta\dot{\theta} \qquad \textbf{(2)}$$

$\dot{s} = +1\,\text{ft/s}$ since the hydraulic cylinder is extending towards the positive sense of s. When $\theta = 30°$, from Eq. (1), $s = \sqrt{369 - 360\cos 30°} = 7.565\,\text{ft}$. Thus, Eq.(2) gives

$$7.565(1) = 180\sin 30°\dot{\theta}$$

$$\dot{\theta} = 0.0841\,\text{rad/s} \qquad \textbf{Ans.}$$

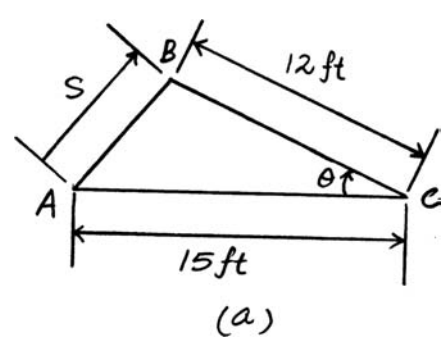

© 2010 Pearson Education, Inc., Upper Saddle River, NJ. All rights reserved. This material is protected under all copyright laws as they currently exist. No portion of this material may be reproduced, in any form or by any means, without permission in writing from the publisher.

***16–52.** If the wedge moves to the left with a constant velocity **v**, determine the angular velocity of the rod as a function of θ.

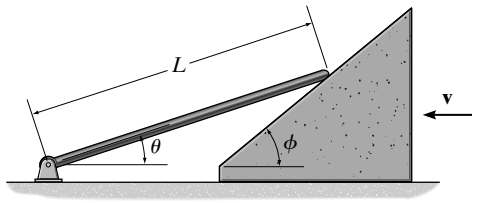

Position Coordinates: Applying the law of sines to the geometry shown in Fig. *a*,

$$\frac{x_A}{\sin(\phi - \theta)} = \frac{L}{\sin\left(180^\circ - \phi\right)}$$

$$x_A = \frac{L\sin(\phi - \theta)}{\sin\left(180^\circ - \phi\right)}$$

However, $\sin\left(180^\circ - \phi\right) = \sin\phi$. Therefore,

$$x_A = \frac{L\sin(\phi - \theta)}{\sin\phi}$$

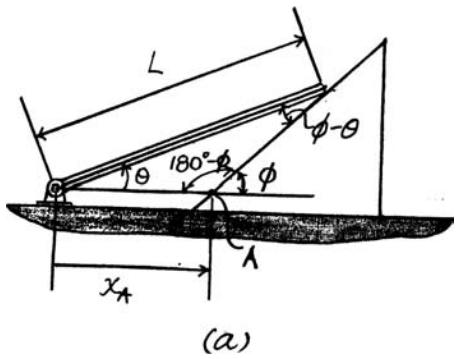

Time Derivative: Taking the time derivative,

$$\dot{x}_A = \frac{L\cos(\phi - \theta)(-\dot{\theta})}{\sin\phi}$$

$$v_A = \dot{x}_A = -\frac{L\cos(\phi - \theta)\dot{\theta}}{\sin\phi} \qquad \textbf{(1)}$$

Since point A is on the wedge, its velocity is $v_A = -v$. The negative sign indicates that $\mathbf{v}_A$ is directed towards the negative sense of x_A. Thus, Eq. (1) gives

$$\dot{\theta} = \frac{v\sin\phi}{L\cos(\phi - \theta)} \qquad \textbf{Ans.}$$

•16–53. At the instant shown, the disk is rotating with an angular velocity of $\boldsymbol{\omega}$ and has an angular acceleration of $\boldsymbol{\alpha}$. Determine the velocity and acceleration of cylinder B at this instant. Neglect the size of the pulley at C.

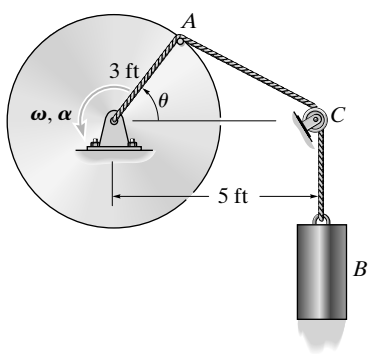

$$s = \sqrt{3^2 + 5^2 - 2(3)(5)\cos\theta}$$

$$v_B = \dot{s} = \frac{1}{2}(34 - 30\cos\theta)^{-\frac{1}{2}}(30\sin\theta)\dot{\theta}$$

$$v_B = \frac{15\,\omega\sin\theta}{(34 - 30\cos\theta)^{\frac{1}{2}}} \qquad \textbf{Ans.}$$

$$a_B = \dot{s} = \frac{15\,\omega\cos\theta\dot{\theta} + 15\dot{\omega}\sin\theta}{\sqrt{34 - 30\cos\theta}} + \frac{\left(-\frac{1}{2}\right)(15\omega\sin\theta)\left(30\sin\theta\dot{\theta}\right)}{(34 - 30\cos\theta)^{\frac{3}{2}}}$$

$$= \frac{15\,(\omega^2\cos\theta + \alpha\sin\theta)}{(34 - 30\cos\theta)^{\frac{1}{2}}} - \frac{225\,\omega^2\sin^2\theta}{(34 - 30\cos\theta)^{\frac{3}{2}}} \qquad \textbf{Ans.}$$

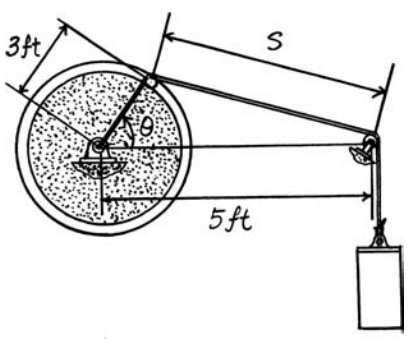

© 2010 Pearson Education, Inc., Upper Saddle River, NJ. All rights reserved. This material is protected under all copyright laws as they currently exist. No portion of this material may be reproduced, in any form or by any means, without permission in writing from the publisher.

16–54. Pinion gear A rolls on the fixed gear rack B with an angular velocity $\omega = 4$ rad/s. Determine the velocity of the gear rack C.

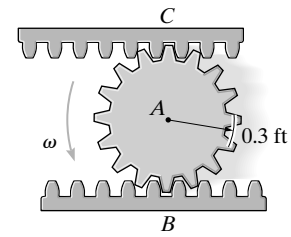

$$\mathbf{v}_C = \mathbf{v}_B + \mathbf{v}_{C/B}$$

$$(\overset{+}{\leftarrow}) \qquad v_C = 0 + 4(0.6)$$

$$v_C = 2.40 \text{ ft/s} \qquad \textbf{Ans.}$$

Also:

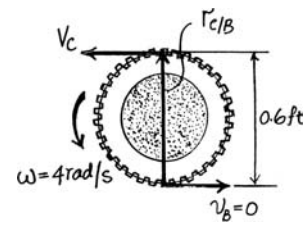

$$\mathbf{v}_C = \mathbf{v}_B + \omega \times \mathbf{r}_{C/B}$$

$$-v_C\,\mathbf{i} = 0 + (4\mathbf{k}) \times (0.6\mathbf{j})$$

$$v_C = 2.40 \text{ ft/s} \qquad \textbf{Ans.}$$

16–55. Pinion gear A rolls on the gear racks B and C. If B is moving to the right at 8 ft/s and C is moving to the left at 4 ft/s, determine the angular velocity of the pinion gear and the velocity of its center A.

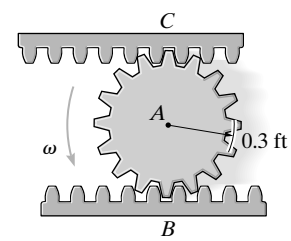

$$\mathbf{v}_C = \mathbf{v}_B + \mathbf{v}_{C/B}$$

$$(\overset{+}{\rightarrow}) \qquad -4 = 8 - 0.6(\omega)$$

$$\omega = 20 \text{ rad/s} \qquad \textbf{Ans.}$$

$$\mathbf{v}_A = \mathbf{v}_B + \mathbf{v}_{A/B}$$

$$(\overset{+}{\rightarrow}) \qquad v_A = 8 - 20(0.3)$$

$$v_A = 2 \text{ ft/s} \rightarrow \qquad \textbf{Ans.}$$

Also,

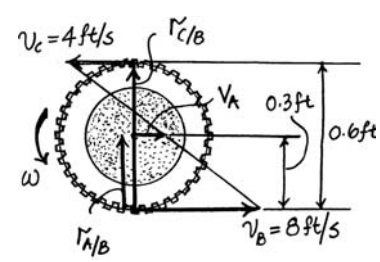

$$\mathbf{v}_C = \mathbf{v}_B + \omega \times \mathbf{r}_{C/B}$$

$$-4\mathbf{i} = 8\mathbf{i} + (\omega\mathbf{k}) \times (0.6\mathbf{j})$$

$$-4 = 8 - 0.6\omega$$

$$\omega = 20 \text{ rad/s} \qquad \textbf{Ans.}$$

$$\mathbf{v}_A = \mathbf{v}_B + \omega \times \mathbf{r}_{A/B}$$

$$v_A\,\mathbf{i} = 8\mathbf{i} + 20\mathbf{k} \times (0.3\mathbf{j})$$

$$v_A = 2 \text{ ft/s} \rightarrow \qquad \textbf{Ans.}$$

© 2010 Pearson Education, Inc., Upper Saddle River, NJ. All rights reserved. This material is protected under all copyright laws as they currently exist. No portion of this material may be reproduced, in any form or by any means, without permission in writing from the publisher.

***16–56.** The gear rests in a fixed horizontal rack. A cord is wrapped around the inner core of the gear so that it remains horizontally tangent to the inner core at A. If the cord is pulled to the right with a constant speed of 2 ft/s, determine the velocity of the center of the gear, C.

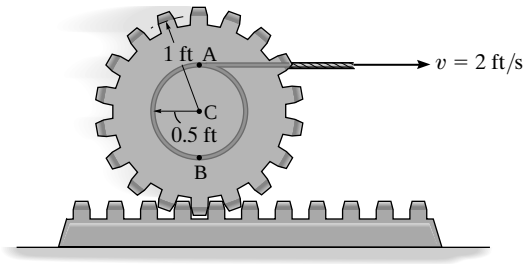

$$\mathbf{v}_A = \mathbf{v}_D + \mathbf{v}_{A/D}$$

$$\left[\underset{\rightarrow}{2}\right] = 0 + \left[\omega(\underset{\rightarrow}{1.5})\right]$$

$$\left(\overset{+}{\rightarrow}\right) \quad 2 = 1.5\omega \qquad \omega = 1.33 \text{ rad/s}$$

$$\mathbf{v}_C = \mathbf{v}_D + \mathbf{v}_{C/D}$$

$$\left[\underset{\rightarrow}{v_C}\right] = 0 + \left[\underset{\rightarrow}{1.33\,(1)}\right]$$

$$\left(\overset{+}{\rightarrow}\right) \quad v_C = 1.33 \text{ ft/s} \rightarrow$$ **Ans.**

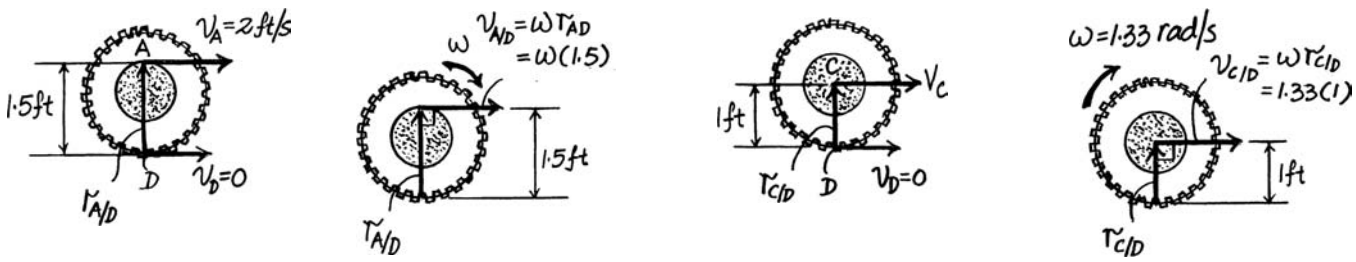

•16–57. Solve Prob. 16–56 assuming that the cord is wrapped around the gear in the opposite sense, so that the end of the cord remains horizontally tangent to the inner core at B and is pulled to the right at 2 ft/s.

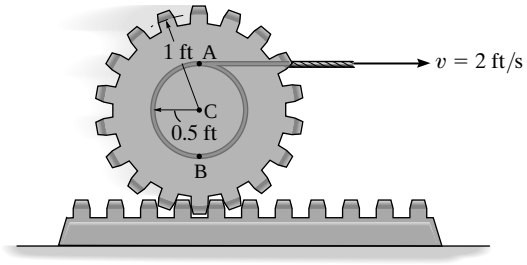

$$\mathbf{v}_B = \mathbf{v}_D + \mathbf{v}_{B/D}$$

$$\left[\underset{\rightarrow}{2}\right] = 0 + \left[\omega(\underset{\rightarrow}{0.5})\right]$$

$$\left(\overset{+}{\rightarrow}\right) \quad 2 = 0.5\omega \qquad \omega = 4 \text{ rad/s}$$

$$\mathbf{v}_C = \mathbf{v}_D + \mathbf{v}_{C/D}$$

$$\left[\underset{\rightarrow}{v_C}\right] = 0 + \left[\underset{\rightarrow}{4\,(1)}\right]$$

$$\left(\overset{+}{\rightarrow}\right) \quad v_C = 4 \text{ ft/s} \rightarrow$$ **Ans.**

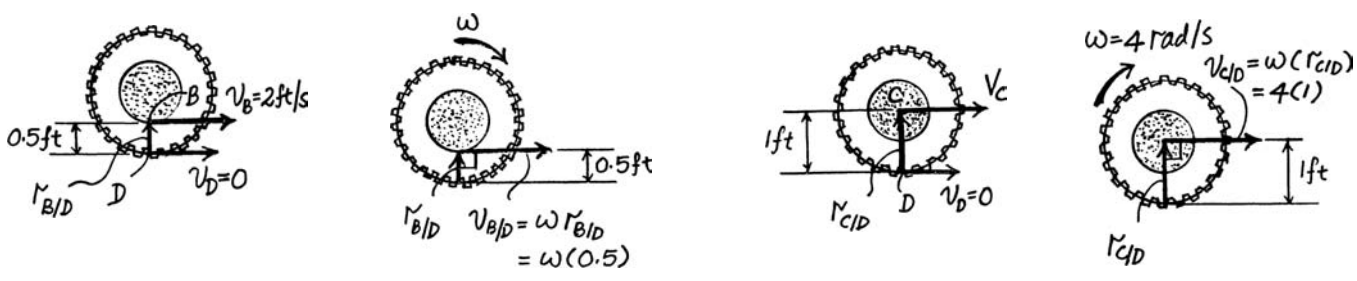

© 2010 Pearson Education, Inc., Upper Saddle River, NJ. All rights reserved. This material is protected under all copyright laws as they currently exist. No portion of this material may be reproduced, in any form or by any means, without permission in writing from the publisher.

16–58. A bowling ball is cast on the "alley" with a backspin of $\omega = 10$ rad/s while its center O has a forward velocity of $v_O = 8$ m/s. Determine the velocity of the contact point A in contact with the alley.

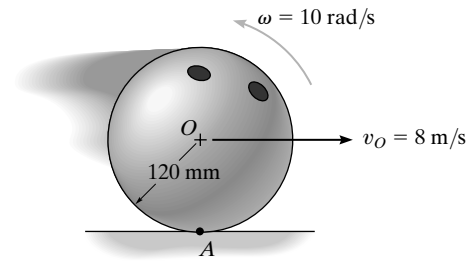

$$\mathbf{v}_A = \mathbf{v}_O + \mathbf{v}_{A/O}$$

$$\left(\overset{+}{\rightarrow}\right) \quad v_A = 8 + 10(0.12)$$

$$v_A = 9.20 \text{ m/s} \rightarrow \qquad \textbf{Ans.}$$

Also,

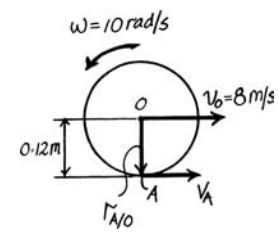

$$\mathbf{v}_A = \mathbf{v}_O + \omega \times \mathbf{r}_{A/O}$$

$$v_A\,\mathbf{i} = 8\mathbf{i} + (10\mathbf{k}) \times (-0.12\mathbf{j})$$

$$\left(\overset{+}{\rightarrow}\right) \quad v_A = 9.20 \text{ m/s} \rightarrow \qquad \textbf{Ans.}$$

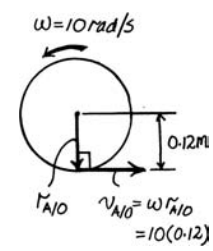

16–59. Determine the angular velocity of the gear and the velocity of its center O at the instant shown.

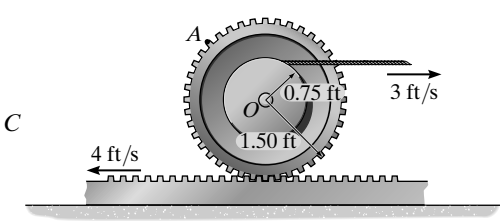

General Plane Motion: Applying the relative velocity equation to points B and C and referring to the kinematic diagram of the gear shown in Fig. a,

$$\mathbf{v}_B = \mathbf{v}_C + \omega \times \mathbf{r}_{B/C}$$

$$3\mathbf{i} = -4\mathbf{i} + \left(-\omega\mathbf{k}\right) \times \left(2.25\mathbf{j}\right)$$

$$3\mathbf{i} = \left(2.25\omega - 4\right)\mathbf{i}$$

Equating the **i** components yields

$$3 = 2.25\omega - 4 \qquad \textbf{(1)}$$

$$\omega = 3.111 \text{ rad/s} \qquad \textbf{Ans. (2)}$$

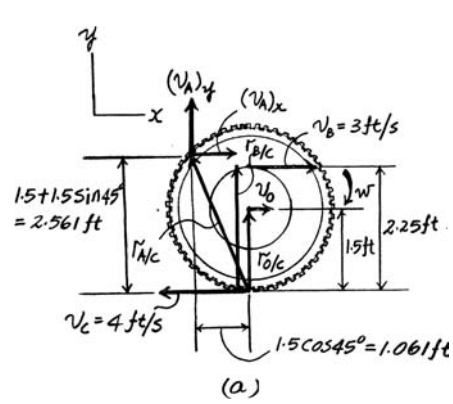

For points O and C,

$$\mathbf{v}_O = \mathbf{v}_C + \omega \times \mathbf{r}_{O/C}$$

$$= -4\mathbf{i} + \left(-3.111\mathbf{k}\right) \times \left(1.5\mathbf{j}\right)$$

$$= [0.6667\mathbf{i}] \text{ ft/s}$$

Thus,

$$v_O = 0.667 \text{ ft/s} \rightarrow \qquad \textbf{Ans.}$$

© 2010 Pearson Education, Inc., Upper Saddle River, NJ. All rights reserved. This material is protected under all copyright laws as they currently exist. No portion of this material may be reproduced, in any form or by any means, without permission in writing from the publisher.

***16–60.** Determine the velocity of point A on the rim of the gear at the instant shown.

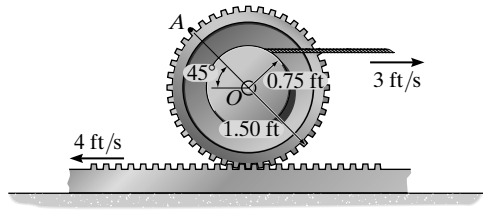

General Plane Motion: Applying the relative velocity equation to points B and C and referring to the kinematic diagram of the gear shown in Fig. a,

$$\mathbf{v}_B = \mathbf{v}_C + \omega \times \mathbf{r}_{B/C}$$

$$3\mathbf{i} = -4\mathbf{i} + \left(-\omega\mathbf{k}\right) \times \left(2.25\mathbf{j}\right)$$

$$3\mathbf{i} = \left(2.25\omega - 4\right)\mathbf{i}$$

Equating the **i** components yields

$$3 = 2.25\omega - 4 \qquad \textbf{(1)}$$

$$\omega = 3.111 \text{ rad/s} \qquad \textbf{(2)}$$

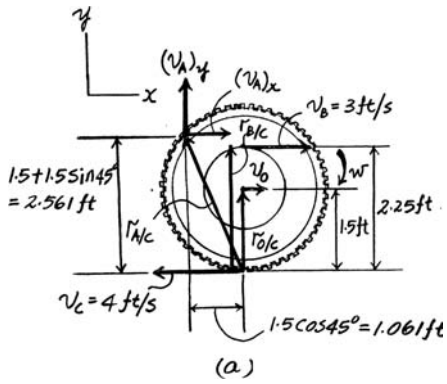

For points A and C,

$$\mathbf{v}_A = \mathbf{v}_C + \omega \times \mathbf{r}_{A/C}$$

$$\left(v_A\right)_x \mathbf{i} + \left(v_A\right)_y \mathbf{j} = -4\mathbf{i} + \left(-3.111\mathbf{k}\right) \times \left(-1.061\mathbf{i} + 2.561\mathbf{j}\right)$$

$$\left(v_A\right)_x \mathbf{i} + \left(v_A\right)_y \mathbf{j} = 3.9665\mathbf{i} + 3.2998\mathbf{j}$$

Equating the **i** and **j** components yields

$$\left(v_A\right)_x = 3.9665 \text{ ft/s} \qquad \left(v_A\right)_y = 3.2998 \text{ ft/s}$$

Thus, the magnitude of v_A is

$$v_A = \sqrt{\left(v_A\right)_x^2 + \left(v_A\right)_y^2} = \sqrt{3.9665^2 + 3.2998^2} = 5.16 \text{ ft/s} \qquad \textbf{Ans.}$$

and its direction is

$$\theta = \tan^{-1}\left[\frac{\left(v_A\right)_y}{\left(v_A\right)_x}\right] = \tan^{-1}\left(\frac{3.2998}{3.9665}\right) = 39.8° \qquad \textbf{Ans.}$$

© 2010 Pearson Education, Inc., Upper Saddle River, NJ. All rights reserved. This material is protected under all copyright laws as they currently exist. No portion of this material may be reproduced, in any form or by any means, without permission in writing from the publisher.

•16–61. The rotation of link AB creates an oscillating movement of gear F. If AB has an angular velocity of $\omega_{AB} = 6$ rad/s, determine the angular velocity of gear F at the instant shown. Gear E is rigidly attached to arm CD and pinned at D to a fixed point.

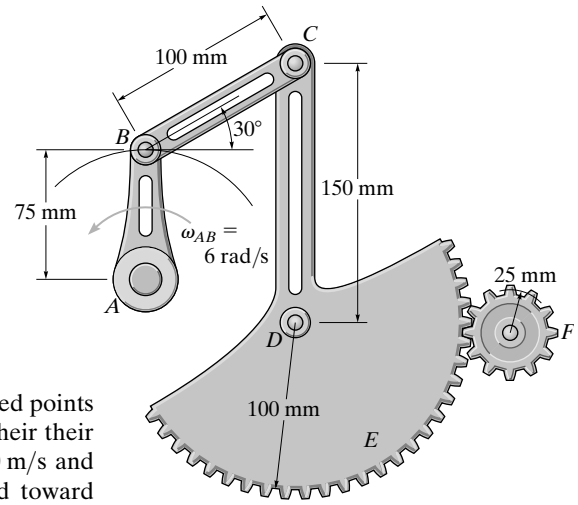

Kinematic Diagram: Since link AB and arm CD are rotating about the fixed points A and D respectively, then $\mathbf{v}_B$ and $\mathbf{v}_C$ are always directed perpendicular their their respective arms with the magnitude of $v_B = \omega_{AB} r_{AB} = 6(0.075) = 0.450$ m/s and $v_C = \omega_{CD} r_{CD} = 0.15\omega_{CD}$. At the instant shown, $\mathbf{v}_B$ and $\mathbf{v}_C$ are directed toward negative x axis.

Velocity Equation: Here, $\mathbf{r}_{B/C} = \{-0.1 \cos 30°\mathbf{i} + 0.1 \sin 30°\mathbf{j}\}$ m $= \{-0.08660\mathbf{i} + 0.05\mathbf{j}\}$ m. Applying Eq. 16–16, we have

$$\mathbf{v}_C = \mathbf{v}_B + \omega_{BC} \times \mathbf{r}_{C/B}$$

$$-0.450\mathbf{i} = -0.15\omega_{CD}\,\mathbf{i} + (\omega_{BC}\mathbf{k}) \times (0.08660\mathbf{i} + 0.05\mathbf{j})$$

$$-0.450\mathbf{i} = -(0.05\omega_{BC} + 0.15\omega_{CD})\mathbf{i} + 0.08660\omega_{BC}\mathbf{j}$$

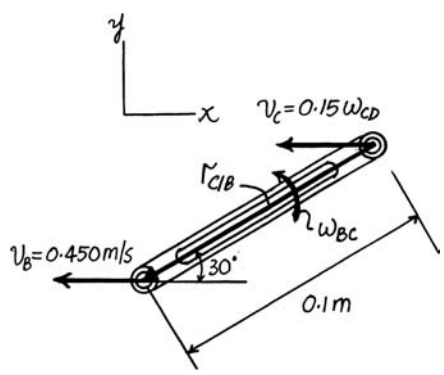

Equating $\mathbf{i}$ and $\mathbf{j}$ components gives

$$0 = 0.08660\omega_{BC} \qquad \omega_{BC} = 0$$

$$-0.450 = -[0.05(0) + 0.15\omega_{CD}] \qquad \omega_{CD} = 3.00 \text{ rad/s}$$

Angular Motion About a Fixed Point: The angular velocity of gear E is the same with arm CD since they are attached together. Then, $\omega_E = \omega_{CD} = 3.00$ rad/s. Here, $\omega_E r_E = \omega_F r_F$ where ω_F is the angular velocity of gear F.

$$\omega_F = \frac{r_E}{r_F}\omega_E = \left(\frac{100}{25}\right)(3.00) = 12.0 \text{ rad/s} \qquad \textbf{Ans.}$$

© 2010 Pearson Education, Inc., Upper Saddle River, NJ. All rights reserved. This material is protected under all copyright laws as they currently exist. No portion of this material may be reproduced, in any form or by any means, without permission in writing from the publisher.

16–62. Piston P moves upward with a velocity of 300 in./s at the instant shown. Determine the angular velocity of the crankshaft AB at this instant.

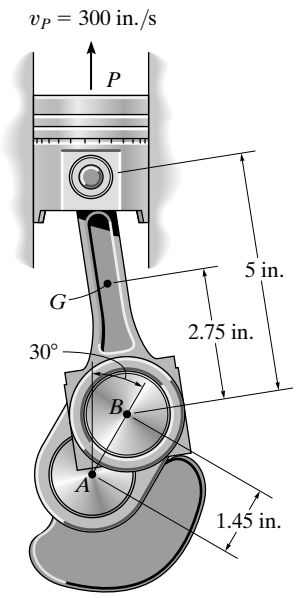

From the geometry:

$$\cos\theta = \frac{1.45 \sin 30°}{5} \qquad \theta = 81.66°$$

For link BP

$\mathbf{v}_P = \{300\mathbf{j}\}$ in/s $\qquad \mathbf{v}_B = -v_B \cos 30°\mathbf{i} + v_B \sin 30°\mathbf{j} \qquad \omega = -\omega_{BP}\mathbf{k}$

$\mathbf{r}_{P/B} = \{-5 \cos 81.66°\mathbf{i} + 5 \sin 81.66°\mathbf{j}\}$ in.

$\mathbf{v}_P = \mathbf{v}_B + \omega \times \mathbf{r}_{P/B}$

$300\mathbf{j} = (-v_B \cos 30°\mathbf{i} + v_B \sin 30°\mathbf{j}) + (-\omega_{BP}\mathbf{k}) \times (-5\cos 81.66°\mathbf{i} + 5 \sin 81.66°\mathbf{j})$

$300\mathbf{j} = (-v_B \cos 30°\mathbf{i} + 5 \sin 81.66°\omega_{BP})\mathbf{i} + (v_B \sin 30° + 5 \cos 81.66° \omega_{BP})\mathbf{j}$

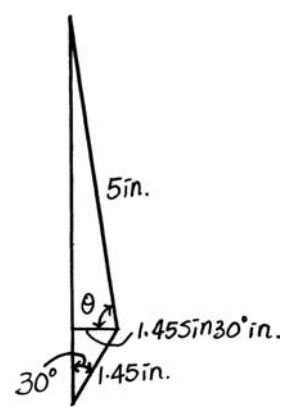

Equating the **i** and **j** components yields:

$$0 = -v_B \cos 30° + 5 \sin 81.66° \, \omega_{BP} \qquad \textbf{(1)}$$

$$300 = v_B \sin 30° + 5 \cos 81.66° \, \omega_{BP} \qquad \textbf{(2)}$$

Solving Eqs. (1) and (2) yields:

$$\omega_{BP} = 83.77 \text{ rad/s} \qquad v_B = 478.53 \text{ in./s}$$

For crankshaft AB: Crankshaft AB rotates about the fixed point A. Hence

$$v_B = \omega_{AB} r_{AB}$$

$$478.53 = \omega_{AB}(1.45) \qquad \omega_{AB} = 330 \text{ rad/s} \circlearrowleft \qquad \textbf{Ans.}$$

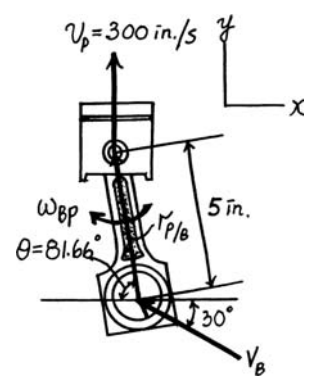

© 2010 Pearson Education, Inc., Upper Saddle River, NJ. All rights reserved. This material is protected under all copyright laws as they currently exist. No portion of this material may be reproduced, in any form or by any means, without permission in writing from the publisher.

16–63. Determine the velocity of the center of gravity G of the connecting rod at the instant shown. Piston P is moving upward with a velocity of 300 in./s.

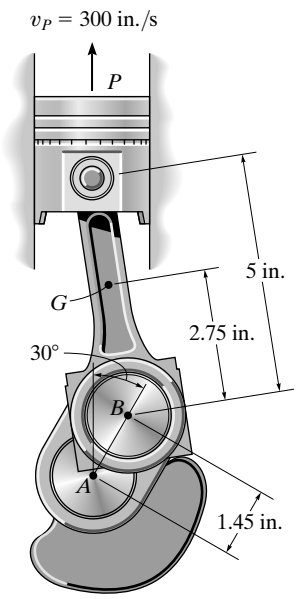

From the geometry:

$$\cos\theta = \frac{1.45 \sin 30°}{5} \qquad \theta = 81.66°$$

For link BP

$$\mathbf{v}_P = \{300\mathbf{j}\}\text{ in/s} \qquad \mathbf{v}_B = -v_B \cos 30°\mathbf{i} + v_B \sin 30°\mathbf{j} \qquad \omega = -\omega_{BP}\mathbf{k}$$

$$\mathbf{r}_{P/B} = \{-5 \cos 81.66°\mathbf{i} + 5 \sin 81.66°\mathbf{j}\}\text{ in.}$$

$$\mathbf{v}_P = \mathbf{v}_B + \omega \times \mathbf{r}_{P/B}$$

$$300\mathbf{j} = (-v_B \cos 30°\mathbf{i} + v_B \sin 30°\mathbf{j}) + (-\omega_{BP}\mathbf{k}) \times (-5 \cos 81.66°\mathbf{i} + 5 \sin 81.66°\mathbf{j})$$

$$300\mathbf{j} = (-v_B \cos 30° + 5 \sin 81.66°\ \omega_{BP})\mathbf{i} + (v_B \sin 30° + 5 \cos 81.66°\ \omega_{BP})\mathbf{j}$$

Equating the **i** and **j** components yields:

$$0 = -v_B \cos 30° + 5 \sin 81.66°\ \omega_{BP} \qquad \textbf{(1)}$$

$$300 = v_B \sin 30° + 5 \cos 81.66°\ \omega_{BP} \qquad \textbf{(2)}$$

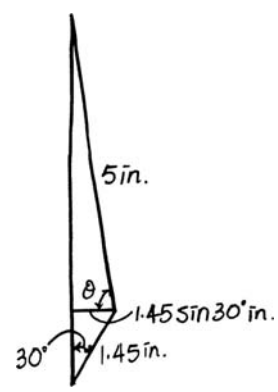

Solving Eqs. (1) and (2) yields:

$$\omega_{BP} = 83.77\text{ rad/s} \qquad v_B = 478.53\text{ in./s}$$

$$\mathbf{v}_P = \{300\mathbf{j}\}\text{ in/s} \qquad \omega = \{-83.77\mathbf{k}\}\text{ rad/s}$$

$$\mathbf{r}_{G/P} = \{2.25 \cos 81.66°\mathbf{i} - 2.25 \sin 81.66°\mathbf{j}\}\text{ in.}$$

$$\mathbf{v}_G = \mathbf{v}_P + \omega \times \mathbf{r}_{G/P}$$

$$= 300\mathbf{j} + (-83.77\mathbf{k}) \times (2.25 \cos 81.66°\mathbf{i} - 2.25 \sin 81.66°\mathbf{j})$$

$$= \{-186.49\mathbf{i} + 272.67\mathbf{j}\}\text{ in./s}$$

$$v_G = \sqrt{(-186.49)^2 + 272.67^2} = 330\text{ in./s} \qquad \textbf{Ans.}$$

$$\theta = \tan^{-1}\left(\frac{272.67}{186.49}\right) = 55.6° \ \measuredangle \qquad \textbf{Ans.}$$

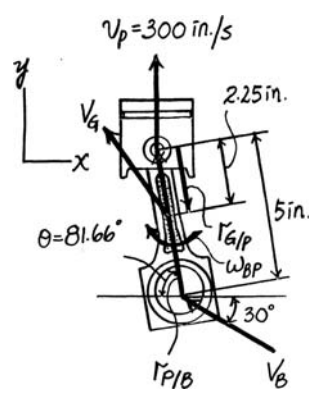

© 2010 Pearson Education, Inc., Upper Saddle River, NJ. All rights reserved. This material is protected under all copyright laws as they currently exist. No portion of this material may be reproduced, in any form or by any means, without permission in writing from the publisher.

***16–64.** The planetary gear system is used in an automatic transmission for an automobile. By locking or releasing certain gears, it has the advantage of operating the car at different speeds. Consider the case where the ring gear R is held fixed, $\omega_R = 0$, and the sun gear S is rotating at $\omega_S = 5$ rad/s. Determine the angular velocity of each of the planet gears P and shaft A.

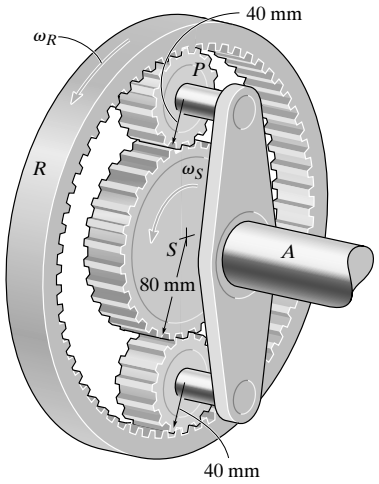

$v_A = 5(80) = 400 \text{ mm/s} \leftarrow$

$v_B = 0$

$\mathbf{v}_B = \mathbf{v}_A + \omega \times \mathbf{r}_{B/A}$

$0 = -400\mathbf{i} + (\omega_p \mathbf{k}) \times (80\mathbf{j})$

$0 = -400\mathbf{i} - 80\omega_p \mathbf{i}$

$\omega_P = -5 \text{ rad/s} = 5 \text{ rad/s}$ **Ans.**

$\mathbf{v}_C = \mathbf{v}_B + \omega \times \mathbf{r}_{C/B}$

$\mathbf{v}_C = 0 + (-5\mathbf{k}) \times (-40\mathbf{j}) = -200\mathbf{i}$

$\omega_A = \dfrac{200}{120} = 1.67 \text{ rad/s}$ **Ans.**

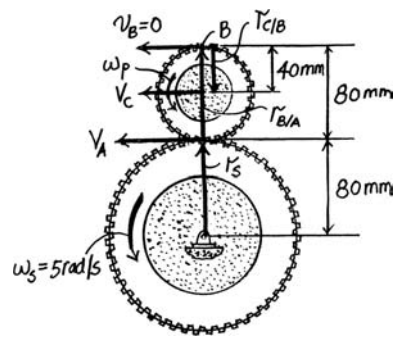

•16–65. Determine the velocity of the center O of the spool when the cable is pulled to the right with a velocity of $\mathbf{v}$. The spool rolls without slipping.

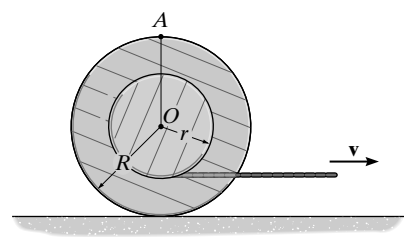

Kinematic Diagram: Since the spool rolls without slipping, the velocity of the contact point P is zero. The kinematic diagram of the spool is shown in Fig. a.

General Plane Motion: Applying the relative velocity equation and referring to Fig. a,

$$\mathbf{v}_B = \mathbf{v}_P + \omega \times \mathbf{r}_{B/D}$$

$$v\mathbf{i} = \mathbf{0} + (-\omega\mathbf{k}) \times \left[(R - r)\mathbf{j}\right]$$

$$v\mathbf{i} = \omega(R - r)\mathbf{i}$$

Equating the **i** components, yields

$$v = \omega(R - r) \qquad \omega = \frac{v}{R - r}$$

Using this result,

$$\mathbf{v}_O = \mathbf{v}_P + \omega \times \mathbf{r}_{O/P}$$

$$= \mathbf{0} + \left(-\frac{v}{R - r}\mathbf{k}\right) \times R\mathbf{j}$$

$$\mathbf{v}_O = \left(\frac{R}{R - r}\right)v \rightarrow$$ **Ans.**

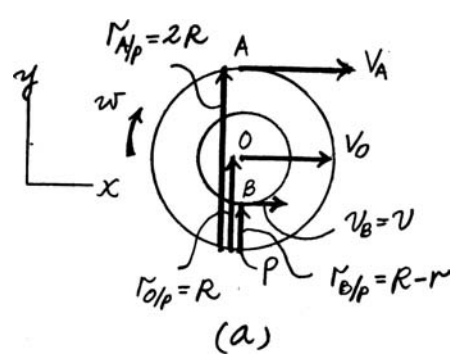

© 2010 Pearson Education, Inc., Upper Saddle River, NJ. All rights reserved. This material is protected under all copyright laws as they currently exist. No portion of this material may be reproduced, in any form or by any means, without permission in writing from the publisher.

16–66. Determine the velocity of point A on the outer rim of the spool at the instant shown when the cable is pulled to the right with a velocity of $\mathbf{v}$. The spool rolls without slipping.

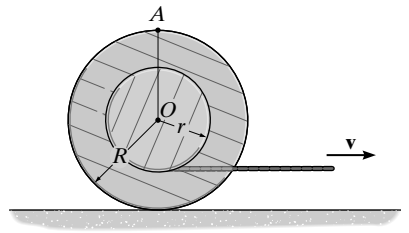

Kinematic Diagram: Since the spool rolls without slipping, the velocity of the contact point P is zero. The kinematic diagram of the spool is shown in Fig. a.

General Plane Motion: Applying the relative velocity equation and referring to Fig. a,

$$\mathbf{v}_B = \mathbf{v}_P + \omega \times \mathbf{r}_{B/D}$$

$$v\mathbf{i} = \mathbf{0} + (-\omega\mathbf{k}) \times \left[(R - r)\mathbf{j}\right]$$

$$v\mathbf{i} = \omega(R - r)\mathbf{i}$$

Equating the **i** components, yields

$$v = \omega(R - r) \qquad\qquad \omega = \frac{v}{R - r}$$

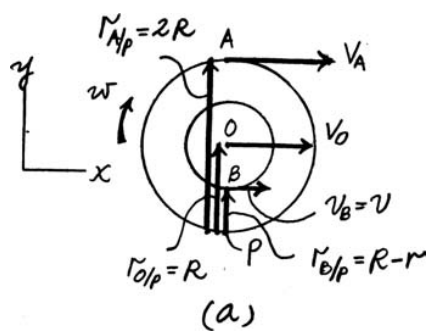

Using this result,

$$\mathbf{v}_A = \mathbf{v}_P + \omega \times \mathbf{r}_{A/P}$$

$$= \mathbf{0} + \left(-\frac{v}{R - r}\mathbf{k}\right) \times 2R\mathbf{j}$$

$$= \left[\left(\frac{2R}{R - r}\right)v\right]\mathbf{i}$$

Thus,

$$v_A = \left(\frac{2R}{R - r}\right)v \rightarrow \qquad \textbf{Ans.}$$

© 2010 Pearson Education, Inc., Upper Saddle River, NJ. All rights reserved. This material is protected under all copyright laws as they currently exist. No portion of this material may be reproduced, in any form or by any means, without permission in writing from the publisher.

16–67. The bicycle has a velocity $v = 4$ ft/s, and at the same instant the rear wheel has a clockwise angular velocity $\omega = 3$ rad/s, which causes it to slip at its contact point A. Determine the velocity of point A.

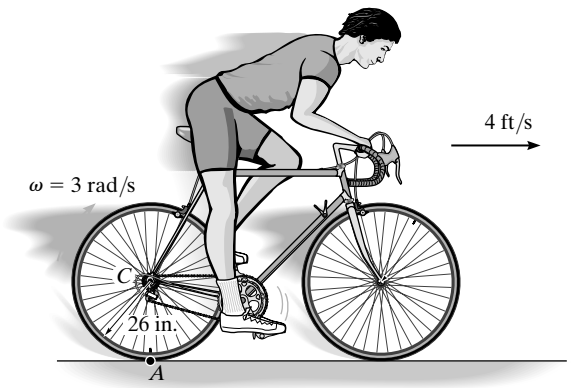

$$\mathbf{v}_A = \mathbf{v}_C + \mathbf{v}_{A/C}$$

$$\begin{bmatrix} v_A \\ \leftarrow \end{bmatrix} = \begin{bmatrix} 4 \\ \rightarrow \end{bmatrix} + \begin{bmatrix} \left(\frac{26}{12}\right)(3) \\ \leftarrow \end{bmatrix}$$

$v_A = 2.5$ ft/s $\leftarrow$ **Ans.**

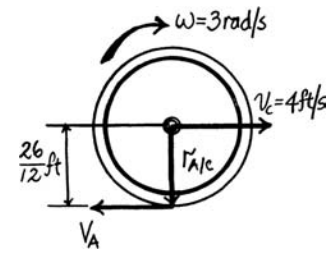

Also,

$$\mathbf{v}_A = \mathbf{v}_C + \omega \times \mathbf{r}_{A/C}$$

$$\mathbf{v}_A = 4\mathbf{i} + (-3\mathbf{k}) \times \left(-\frac{26}{12}\mathbf{j}\right)$$

$$\mathbf{v}_A = 4\mathbf{i} - 6.5\mathbf{i} = -2.5\mathbf{i}$$

$v_A = 2.5$ ft/s $\leftarrow$ **Ans.**

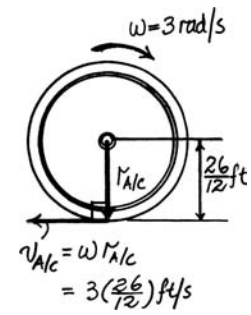

***16–68.** If bar AB has an angular velocity $\omega_{AB} = 4$ rad/s, determine the velocity of the slider block C at the instant shown.

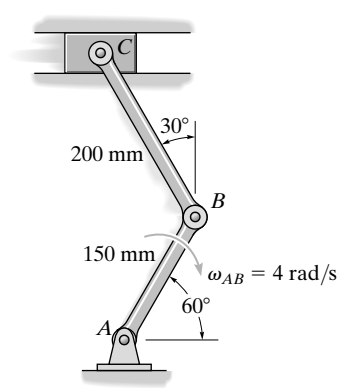

For link AB: Link AB rotates about a fixed point A. Hence

$$v_B = \omega_{AB}\, r_{AB} = 4(0.15) = 0.6 \text{ m/s}$$

For link BC

$$\mathbf{v}_B = \{0.6 \cos 30°\mathbf{i} - 0.6 \sin 30°\mathbf{j}\}\text{m/s} \qquad \mathbf{v}_C = v_C\mathbf{i} \qquad \omega = \omega_{BC}\,\mathbf{k}$$

$$\mathbf{r}_{C/B} = \{-0.2 \sin 30°\mathbf{i} + 0.2 \cos 30°\mathbf{j}\} \text{ m}$$

$$\mathbf{v}_C = \mathbf{v}_B + \omega \times \mathbf{r}_{C/B}$$

$$v_C\,\mathbf{i} = (0.6 \cos 30°\mathbf{i} - 0.6 \sin 30°\mathbf{j}) + (\omega_{BC}\,\mathbf{k}) \times (-0.2 \sin 30°\mathbf{i} + 0.2 \cos 30°\mathbf{j})$$

$$v_C\mathbf{i} = (0.5196 - 0.1732\omega_{BC})\mathbf{i} - (0.3 + 0.1\omega_{BC})\mathbf{j}$$

Equating the **i** and **j** components yields:

$$0 = 0.3 + 0.1\omega_{BC} \qquad \omega_{BC} = -3 \text{ rad/s}$$

$v_C = 0.5196 - 0.1732(-3) = 1.04$ m/s $\rightarrow$ **Ans.**

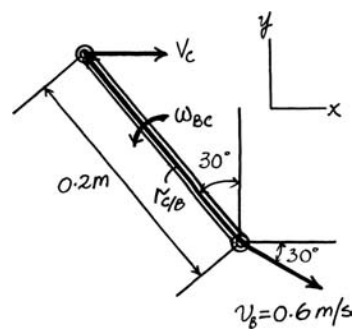

© 2010 Pearson Education, Inc., Upper Saddle River, NJ. All rights reserved. This material is protected under all copyright laws as they currently exist. No portion of this material may be reproduced, in any form or by any means, without permission in writing from the publisher.

•16–69. The pumping unit consists of the crank pitman AB, connecting rod BC, walking beam CDE and pull rod F. If the crank is rotating with an angular velocity of $\omega = 10$ rad/s, determine the angular velocity of the walking beam and the velocity of the pull rod EFG at the instant shown.

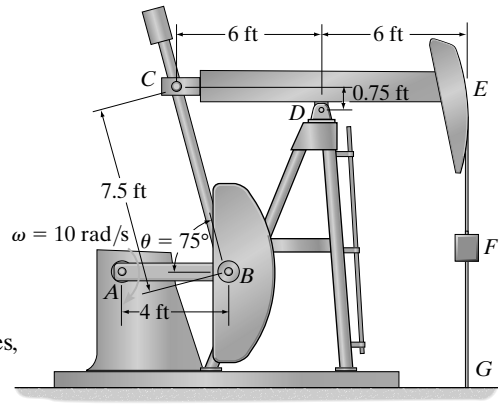

Rotation About a Fixed Axis: The crank and walking beam rotate about fixed axes, Figs. *a* and *b*. Thus, the velocity of points B, C, and E can be determined from

$$v_B = \omega \times r_B = \left(-10\mathbf{k}\right) \times \left(4\mathbf{i}\right) = \left[-40\mathbf{j}\right]\text{ft/s}$$

$$v_C = \omega_{CDE} \times r_{DC} = \left(\omega_{CDE}\mathbf{k}\right) \times \left(-6\mathbf{i} + 0.75\mathbf{j}\right) = -0.75\omega_{CDE}\mathbf{i} - 6\omega_{CDE}\mathbf{j}$$

$$v_E = \omega_{CDE} \times r_{DE} = \left(\omega_{CDE}\mathbf{k}\right) \times \left(6\mathbf{i}\right) = 6\omega_{CDE}\mathbf{j} \qquad \textbf{(1)}$$

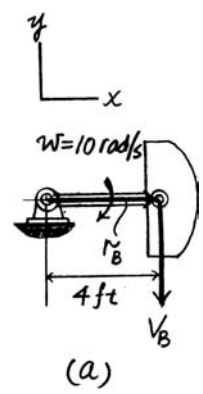

General Plane Motion: Applying the relative velocity equation and referring to the kinematic diagram of link BC shown in Fig. *c*,

$$\mathbf{v}_C = \mathbf{v}_B + \omega_{BC} \times \mathbf{r}_{C/B}$$

$$-0.75\omega_{CDE}\mathbf{i} - 6\omega_{CDE}\mathbf{j} = -40\mathbf{j} + (\omega_{BC}\mathbf{k}) \times (-7.5\cos 75°\,\mathbf{i} + 7.5\sin 75°\,\mathbf{j})$$

$$-0.75\omega_{CDE}\mathbf{i} - 6\omega_{CDE}\mathbf{j} = -7.244\omega_{BC}\,\mathbf{i} - (1.9411\omega_{BC} + 40)\mathbf{j}$$

Equating the **i** and **j** components

$$-0.75\omega_{CDE} = -7.244\omega_{BC} \qquad \textbf{(2)}$$

$$-6\omega_{CDE} = -(1.9411\omega_{BC} + 40) \qquad \textbf{(3)}$$

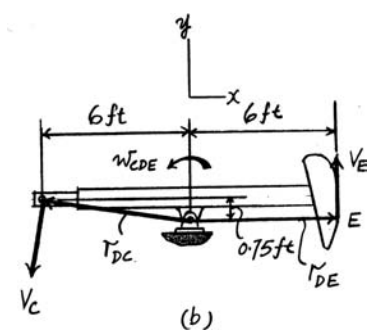

Solving Eqs. (1) and (2) yields

$\omega_{BC} = 0.714$ rad/s $\qquad \omega_{CDE} = 6.898$ rad/s $= 6.90$ rad/s **Ans.**

Substituting the result for ω_{CDE} into Eq. (1),

$$\mathbf{v}_E = \theta(6.898) = [41.39\mathbf{j}]\text{ ft/s}$$

Thus,

$$v_E = 41.4\text{ ft/s} \uparrow \qquad \textbf{Ans.}$$

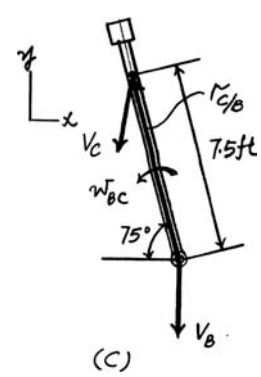

© 2010 Pearson Education, Inc., Upper Saddle River, NJ. All rights reserved. This material is protected under all copyright laws as they currently exist. No portion of this material may be reproduced, in any form or by any means, without permission in writing from the publisher.

16–70. If the hydraulic cylinder shortens at a constant rate of $v_C = 2$ ft/s, determine the angular velocity of link ACB and the velocity of block B at the instant shown.

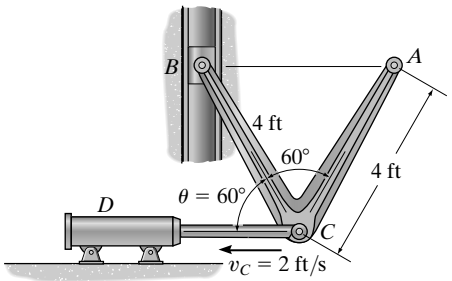

General Plane Motion: Applying the relative velocity equation to points B and C and referring to the kinematic diagram of link ABC shown in Fig. a,

$$\mathbf{v}_B = \mathbf{v}_C + \omega \times \mathbf{r}_{B/C}$$

$$v_B\mathbf{j} = -2\mathbf{i} + (-\omega\mathbf{k}) \times (-4\cos 60°\mathbf{i} + 4\sin 60°\,\mathbf{j})$$

$$v_B\mathbf{j} = (3.464\omega - 2)\mathbf{i} + 2\omega\mathbf{j}$$

Equating the **i** and **j** components yields

$$0 = 3.464\omega - 2$$

$$v_B = 2\omega$$

Solving,

$$\omega = 0.577 \text{ rad/s} \qquad \textbf{Ans.}$$

$$v_B = 1.15 \text{ ft/s} \uparrow \qquad \textbf{Ans.}$$

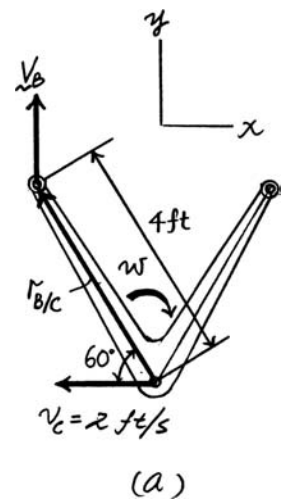

16–71. If the hydraulic cylinder shortens at a constant rate of $v_C = 2$ ft/s, determine the velocity of end A of link ACB at the instant shown.

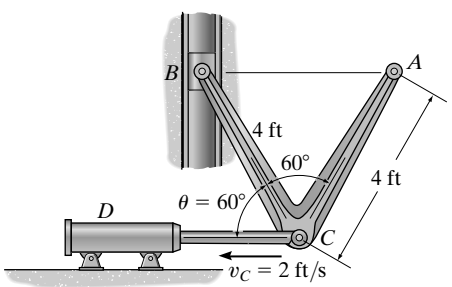

General Plane Motion: First, applying the relative velocity equation to points B and C and referring to the kinematic diagram of link ABC shown in Fig. a,

$$\mathbf{v}_B = \mathbf{v}_C + \omega \times \mathbf{r}_{B/C}$$

$$v_B\mathbf{j} + -2\mathbf{i} + (-\omega\mathbf{k}) \times (-4\cos 60°\,\mathbf{i} + 4\sin 60°\,\mathbf{j})$$

$$v_B\mathbf{j} = (3.464\omega - 2)\mathbf{i} + 2\omega\mathbf{j}$$

Equating the **i** components yields

$$0 = 3.464\omega - 2 \qquad \omega = 0.5774 \text{ rad/s}$$

Then, for points A and C using the result of ω,

$$\mathbf{v}_A = \mathbf{v}_C + \omega \times \mathbf{r}_{A/C}$$

$$(v_A)_x\mathbf{i} + (v_A)_y\mathbf{j} = -2\mathbf{i} + (-0.5774\mathbf{k}) \times (4\cos 60°\,\mathbf{i} + 4\sin 60°\,\mathbf{j})$$

$$(v_A)_x\mathbf{i} + (v_A)_y\mathbf{j} = -1.1547\mathbf{j}$$

Equating the **i** and **j** components yields

$$(v_A)_x = 0 \qquad (v_A)_y = -1.1547 \text{ ft/s} = 1.1547 \text{ ft/s} \downarrow$$

Thus,

$$v_A = (v_A)_y = 1.15 \text{ ft/s}\downarrow \qquad \textbf{Ans.}$$

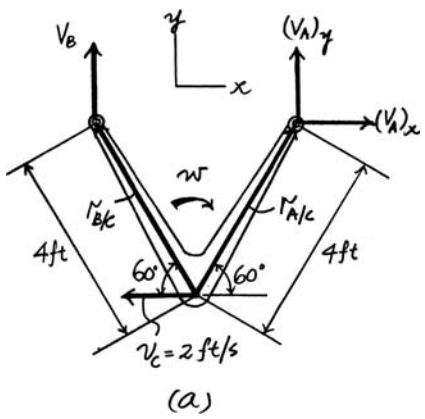

© 2010 Pearson Education, Inc., Upper Saddle River, NJ. All rights reserved. This material is protected under all copyright laws as they currently exist. No portion of this material may be reproduced, in any form or by any means, without permission in writing from the publisher.

***16–72.** The epicyclic gear train consists of the sun gear A which is in mesh with the planet gear B. This gear has an inner hub C which is fixed to B and in mesh with the fixed ring gear R. If the connecting link DE pinned to B and C is rotating at $\omega_{DE} = 18$ rad/s about the pin at E, determine the angular velocities of the planet and sun gears.

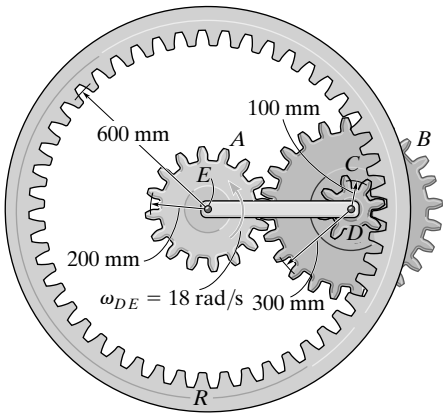

$v_D = r_{DE}\,\omega_{DE} = (0.5)(18) = 9 \text{ m/s} \uparrow$

The velocity of the contact point P with the ring is zero.

$\mathbf{v}_D = \mathbf{v}_P + \omega \times \mathbf{r}_{D/P}$

$9\mathbf{j} = 0 + (-\omega_B\,\mathbf{k}) \times (-0.1\mathbf{i})$

$\omega_B = 90 \text{ rad/s} \circlearrowright$ **Ans.**

Let P' be the contact point between A and B.

$\mathbf{v}_{P'} = \mathbf{v}_P + \omega \times \mathbf{r}_{P'/P}$

$v_{P'}\,\mathbf{j} = \mathbf{0} + (-90\mathbf{k}) \times (-0.4\mathbf{i})$

$v_{P'} = 36 \text{ m/s} \uparrow$

$\omega_A = \dfrac{v_{P'}}{r_A} = \dfrac{36}{0.2} = 180 \text{ rad/s} \circlearrowleft$ **Ans.**

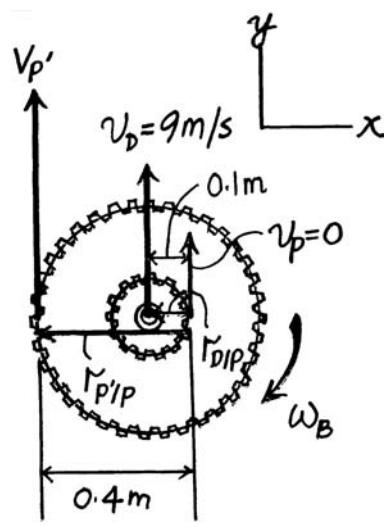

© 2010 Pearson Education, Inc., Upper Saddle River, NJ. All rights reserved. This material is protected under all copyright laws as they currently exist. No portion of this material may be reproduced, in any form or by any means, without permission in writing from the publisher.

•16–73. If link AB has an angular velocity of $\omega_{AB} = 4$ rad/s at the instant shown, determine the velocity of the slider block E at this instant. Also, identify the type of motion of each of the four links.

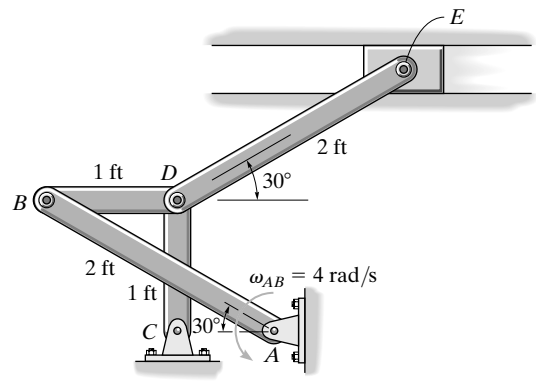

Link AB rotates about the fixed point A. Hence

$$v_B = \omega_{AB} r_{AB} = 4(2) = 8 \text{ ft/s}$$

For link BD

$$\mathbf{v}_B = \{-8\cos 60°\mathbf{i} - 8\sin 60°\,\mathbf{j}\}\text{ ft/s} \qquad \mathbf{v}_D = -v_D\mathbf{i} \qquad \omega_{BD} = \omega_{BD}\,\mathbf{k}$$

$$\mathbf{r}_{D/B} = \{1\mathbf{i}\}\text{ ft}$$

$$\mathbf{v}_D = \mathbf{v}_B + \omega_{BD} \times \mathbf{r}_{D/B}$$

$$-v_D\mathbf{i} = (-8\cos 60°\mathbf{i} - 8\sin 60°\mathbf{j}) + (\omega_{BD}\mathbf{k}) \times (1\mathbf{i})$$

$$-v_D\,\mathbf{i} = -8\cos 60°\mathbf{i} + (\omega_{BD} - 8\sin 60°)\mathbf{j}$$

$(\overset{+}{\rightarrow})$ $\quad -v_D = -8\cos 60° \qquad v_D = 4 \text{ ft/s}$

$(+\uparrow)$ $\quad 0 = \omega_{BD} - 8\sin 60° \qquad \omega_{BD} = 6.928 \text{ rad/s}$

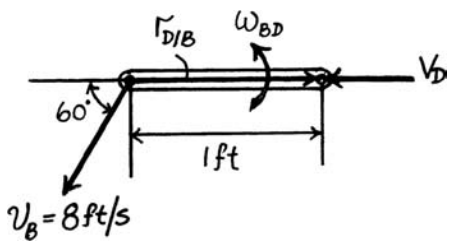

For Link DE

$$\mathbf{v}_D = \{-4\mathbf{i}\}\text{ ft/s} \qquad \omega_{DE} = \omega_{DE}\,\mathbf{k} \qquad \mathbf{v}_E = -v_E\mathbf{i}$$

$$\mathbf{r}_{E/D} = \{2\cos 30°\mathbf{i} + 2\sin 30°\mathbf{j}\}\text{ ft}$$

$$\mathbf{v}_E = \mathbf{v}_D + \omega_{DE} \times \mathbf{r}_{E/D}$$

$$-v_E\mathbf{i} = -4\mathbf{i} + (\omega_{DE}\mathbf{k}) \times (2\cos 30°\mathbf{i} + 2\sin 30°\mathbf{j})$$

$$-v_E\mathbf{i} = (-4 - 2\sin 30°\,\omega_{DE})\mathbf{i} + 2\cos 30°\omega_{DE}\mathbf{j}$$

$(\overset{+}{\rightarrow})$ $\quad 0 = 2\cos 30°\,\omega_{DE} \qquad \omega_{DE} = 0$

$(+\uparrow)$ $\quad -v_E = -4 - 2\sin 30°(0) \qquad v_E = 4\text{ft/s} \quad \leftarrow$ **Ans.**

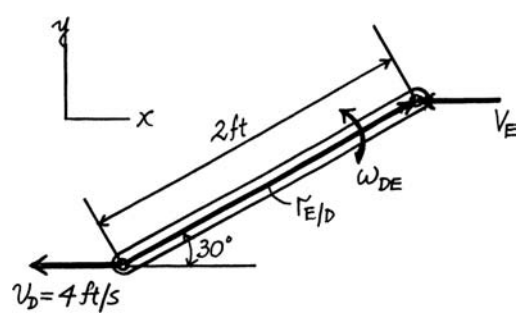

© 2010 Pearson Education, Inc., Upper Saddle River, NJ. All rights reserved. This material is protected under all copyright laws as they currently exist. No portion of this material may be reproduced, in any form or by any means, without permission in writing from the publisher.

16–74. At the instant shown, the truck travels to the right at 3 m/s, while the pipe rolls counterclockwise at $\omega = 8$ rad/s without slipping at B. Determine the velocity of the pipe's center G.

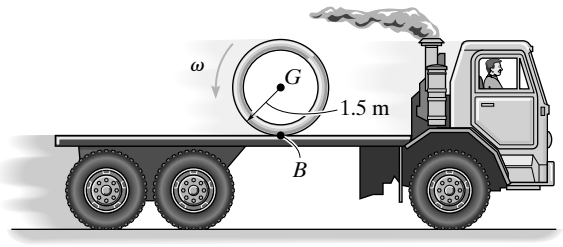

$\mathbf{v}_G = \mathbf{v}_B + \mathbf{v}_{G/B}$

$$\left[\underset{\rightarrow}{\mathbf{v}_G}\right] = \left[\underset{\rightarrow}{3}\cdot\right] + \left[\underset{\leftarrow}{1.5(8)}\right]$$

$v_G = 9 \text{ m/s} \leftarrow$ **Ans.**

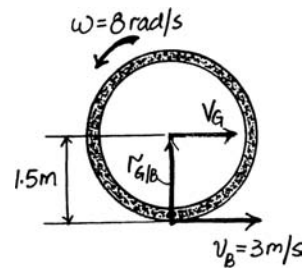

Also:

$\mathbf{v}_G = \mathbf{v}_B + \omega \times \mathbf{r}_{G/B}$

$v_G\mathbf{i} = 3\mathbf{i} + (8\mathbf{k}) \times (1.5\mathbf{j})$

$v_G = 3 - 12$

$v_G = -9 \text{ m/s} = 9 \text{ m/s} \leftarrow$ **Ans.**

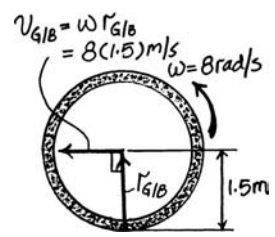

16–75. At the instant shown, the truck travels to the right at 8 m/s. If the pipe does not slip at B, determine its angular velocity if its mass center G appears to remain stationary to an observer on the ground.

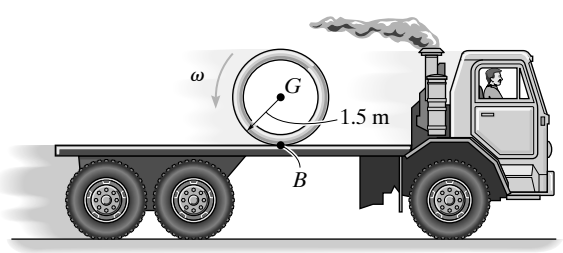

$\mathbf{v}_G = \mathbf{v}_B + \mathbf{v}_{G/B}$

$$0 = \left[\underset{\rightarrow}{8}\right] + \left[\underset{\leftarrow}{1.5\omega}\right]$$

$\omega = \dfrac{8}{1.5} = 5.33 \text{ rad/s} \circlearrowleft$ **Ans.**

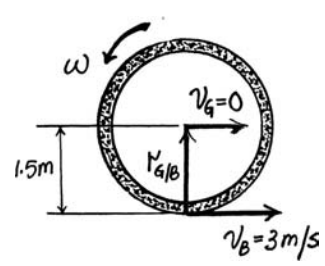

Also:

$\mathbf{v}_G = \mathbf{v}_B + \omega \times \mathbf{r}_{G/B}$

$0\mathbf{i} = 8\mathbf{i} + (\omega\mathbf{k}) \times (1.5\mathbf{j})$

$0 = 8 - 1.5\omega$

$\omega = \dfrac{8}{1.5} = 5.33 \text{ rad/s} \circlearrowleft$ **Ans.**

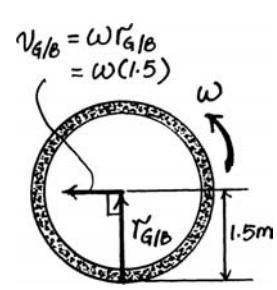

© 2010 Pearson Education, Inc., Upper Saddle River, NJ. All rights reserved. This material is protected under all copyright laws as they currently exist. No portion of this material may be reproduced, in any form or by any means, without permission in writing from the publisher.

***16–76.** The mechanism of a reciprocating printing table is driven by the crank AB. If the crank rotates with an angular velocity of $\omega = 10$ rad/s, determine the velocity of point C at the instant shown.

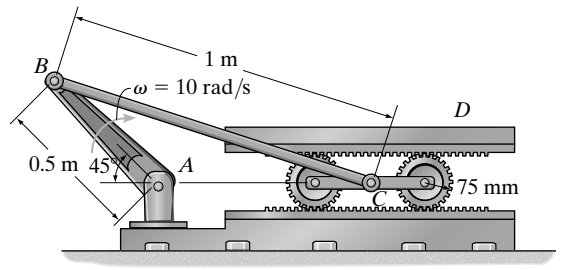

Rotation About a Fixed Axis: Referring to Fig. *a*,

$$v_B = \omega \times \mathbf{r}_B$$

$$= (-10\mathbf{k}) \times (-0.5\cos 45°\,\mathbf{i} + 0.5\sin 45°\mathbf{j})$$

$$= [3.536\mathbf{i} + 3.536\mathbf{j}]\text{ m}$$

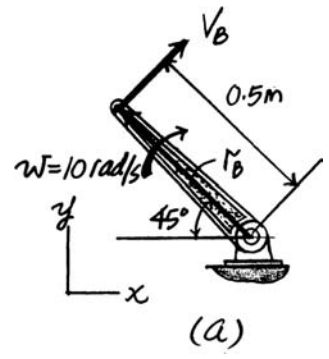

General Plane Motion: Applying the law of sines to the geometry shown in Fig. *b*,

$$\frac{\sin\phi}{0.5} = \frac{\sin 135°}{1} \qquad \phi = 20.70°$$

Applying the relative velocity equation to the kinematic diagram of link BC shown in Fig. *c*,

$$\mathbf{v}_B = \mathbf{v}_C + \omega_{BC} \times \mathbf{r}_{B/C}$$

$$3.536\mathbf{i} + 3.536\mathbf{j} = v_C\,\mathbf{i} + (-\omega_{BC}\,\mathbf{k}) \times (-1\cos 20.70°\,\mathbf{i} + 1\sin 20.70°\,\mathbf{j})$$

$$3.536\mathbf{i} + 3.536\mathbf{j} = (v_C + 0.3536\omega_{BC})\mathbf{i} + 0.9354\omega_{BC}\,\mathbf{j}$$

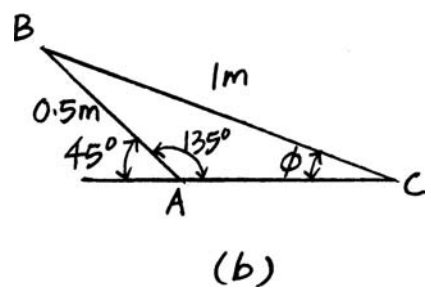

Equating the **i** and **j** components yields,

$$3.536 = v_C + 0.3536\omega_{BC}$$

$$3.536 = 0.9354\omega_{BC}$$

Solving,

$$\omega_{BC} = 3.780\text{ rad/s} \qquad \textbf{Ans.}$$

$$v_C = 2.199\text{ m/s} \qquad \textbf{Ans.}$$

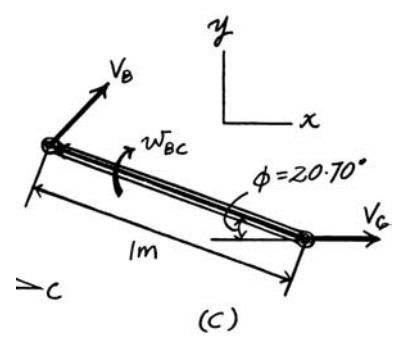

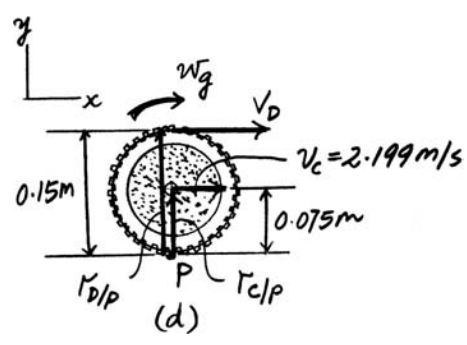

© 2010 Pearson Education, Inc., Upper Saddle River, NJ. All rights reserved. This material is protected under all copyright laws as they currently exist. No portion of this material may be reproduced, in any form or by any means, without permission in writing from the publisher.

•16–77. The planetary gear set of an automatic transmission consists of three planet gears A, B, and C, mounted on carrier D, and meshed with the sun gear E and ring gear F. By controlling which gear of the planetary set rotates and which gear receives the engine's power, the automatic transmission can alter a car's speed and direction. If the carrier is rotating with a counterclockwise angular velocity of $\omega_D = 20$ rad/s while the ring gear is rotating with a clockwise angular velocity of $\omega_F = 10$ rad/s, determine the angular velocity of the planet gears and the sun gear. The radii of the planet gears and the sun gear are 45 mm and 75 mm, respectively.

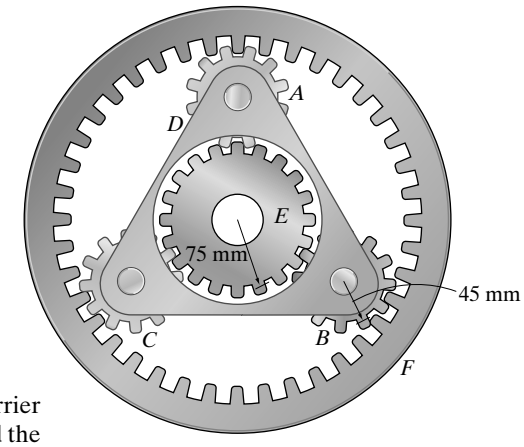

Rotation About a Fixed Axis: Here, the ring gear, the sun gear, and the carrier rotate about a fixed axis. Thus, the velocity of the center O of the planet gear and the contact points P' and P with the ring and sun gear can be determined from

$$v_O = \omega_D r_O = 20(0.045 + 0.075) = 2.4 \text{ m/s} \leftarrow$$

$$v_{P'} = \omega_F r_F = 10(0.045 + 0.045 + 0.075) = 1.65 \text{ m/s} \rightarrow$$

$$v_P = \omega_E r_E = \omega_E(0.075) = 0.075\omega_E$$

General Plane Motion: First, applying the relative velocity equation for O and P' and referring to the kinematic diagram of planet gear A shown in Fig. a,

$$\mathbf{v}_O = \mathbf{v}_{P'} + \omega_A \times \mathbf{r}_{O/P'}$$

$$-2.4\mathbf{i} = 1.65\mathbf{i} + (-\omega_A\,\mathbf{k}) \times (-0.045\mathbf{j})$$

$$-2.4\mathbf{i} = (1.65 - 0.045\omega_A)\mathbf{i}$$

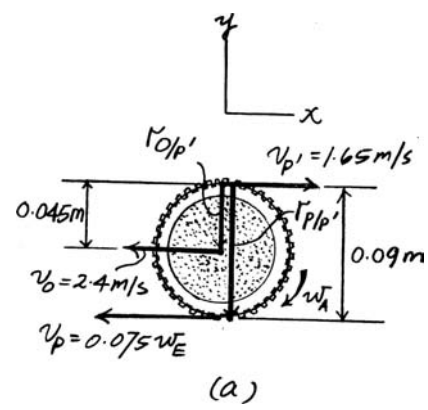

Thus,

$$-2.4 = 1.65 - 0.045\omega_A$$

$$\omega_A = 90 \text{ rad/s} \qquad \textbf{Ans.}$$

Using this result to apply the relative velocity equation for P' and P,

$$\mathbf{v}_P = \mathbf{v}_{P'} + \omega_A \times \mathbf{r}_{P/P'}$$

$$-0.075\omega_E\mathbf{i} = 1.65\mathbf{i} + (-90\mathbf{j}) \times (-0.09\mathbf{j})$$

$$-0.075\omega_E\mathbf{i} = -6.45\mathbf{i}$$

Thus,

$$-0.075\omega_E = -6.45 \qquad \omega_E = 86 \text{ rad/s} \qquad \textbf{Ans.}$$

© 2010 Pearson Education, Inc., Upper Saddle River, NJ. All rights reserved. This material is protected under all copyright laws as they currently exist. No portion of this material may be reproduced, in any form or by any means, without permission in writing from the publisher.

16–78. The planetary gear set of an automatic transmission consists of three planet gears A, B, and C, mounted on carrier D, and meshed with sun gear E and ring gear F. By controlling which gear of the planetary set rotates and which gear receives the engine's power, the automatic transmission can alter a car's speed and direction. If the ring gear is held stationary and the carrier is rotating with a clockwise angular velocity of $\omega_D = 20$ rad/s, determine the angular velocity of the planet gears and the sun gear. The radii of the planet gears and the sun gear are 45 mm and 75 mm, respectively.

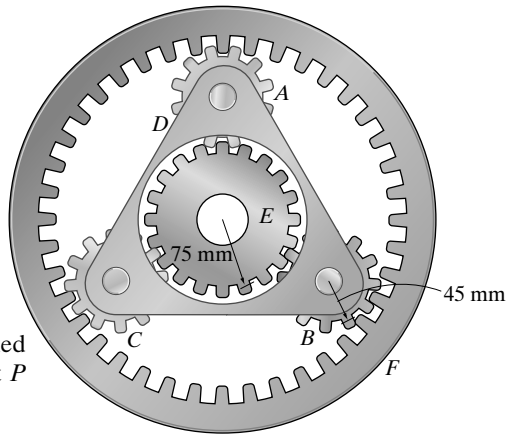

Rotation About a Fixed Axis: Here, the carrier and the sun gear rotate about a fixed axis. Thus, the velocity of the center O of the planet gear and the contact point P with the sun gear can be determined from

$$v_O = \omega_D r_D = 20(0.045 + 0.075) = 2.4 \text{ m/s}$$

$$v_P = \omega_E r_E = \omega_E (0.075) = 0.075\omega_E$$

General Plane Motion: Since the ring gear is held stationary, the velocity of the contact point P' with the planet gear A is zero. Applying the relative velocity equation for O and P' and referring to the kinematic diagram of planet gear A shown in Fig. a,

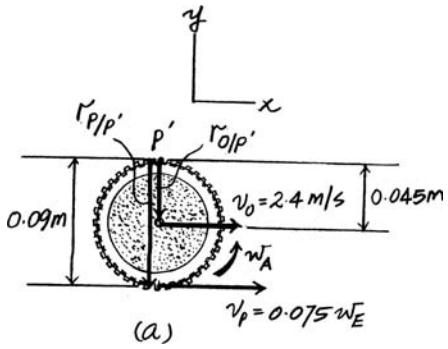

$$\mathbf{v}_O = \mathbf{v}_{P'} + \omega_A \times \mathbf{r}_{O/P'}$$

$$2.4\mathbf{i} = \mathbf{0} + (\omega_A\mathbf{k}) \times (-0.045\mathbf{j})$$

$$2.4\mathbf{i} = 0.045\omega_A\,\mathbf{i}$$

Thus,

$$2.4 = 0.045\omega_A$$

$$\omega_A = 53.33 \text{ rad/s} = 53.3 \text{ rad/s} \qquad \textbf{Ans.}$$

Using this result to apply the relative velocity equation for points P' and P,

$$\mathbf{v}_P = \mathbf{v}_{P'} + \omega_A \times \mathbf{r}_{P/P'}$$

$$0.075\omega_E\,\mathbf{i} = \mathbf{0} + (53.33\mathbf{k}) \times (-0.09\mathbf{j})$$

$$0.075\omega_E\,\mathbf{i} = 4.8\mathbf{i}$$

Thus,

$$0.075\omega_E = 4.8 \qquad \textbf{Ans.}$$

$$\omega_E = 64 \text{ rad/s} \qquad \textbf{Ans.}$$

© 2010 Pearson Education, Inc., Upper Saddle River, NJ. All rights reserved. This material is protected under all copyright laws as they currently exist. No portion of this material may be reproduced, in any form or by any means, without permission in writing from the publisher.

16–79. If the ring gear D is held fixed and link AB rotates with an angular velocity of $\omega_{AB} = 10$ rad/s, determine the angular velocity of gear C.

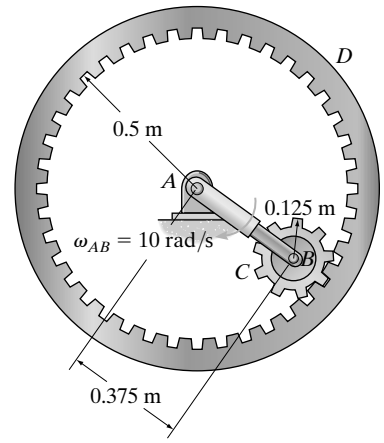

Rotation About a Fixed Axis: Since link AB rotates about a fixed axis, Fig. a, the velocity of the center B of gear C is

$$v_B = \omega_{AB} r_{AB} = 10(0.375) = 3.75 \text{ m/s}$$

General Plane Motion: Since gear D is fixed, the velocity of the contact point P between the gears is zero. Applying the relative velocity equation and referring to the kinematic diagram of gear C shown in Fig. b,

$$\mathbf{v}_B = \mathbf{v}_P + \omega_C \times \mathbf{r}_{B/P}$$

$$-3.75\mathbf{i} = \mathbf{0} + (\omega_C \mathbf{k}) \times (0.125\mathbf{j})$$

$$-3.75\mathbf{i} = -0.125\omega_C\mathbf{i}$$

Thus,

$$-3.75 = -0.125\omega_C$$

$$\omega_C = 30 \text{ rad/s} \qquad \textbf{Ans.}$$

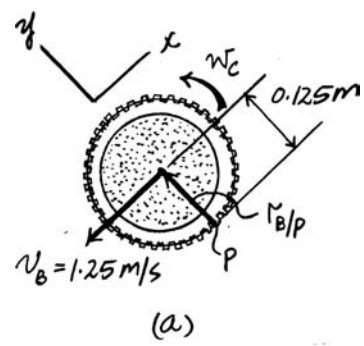

***16–80.** If the ring gear D rotates counterclockwise with an angular velocity of $\omega_D = 5$ rad/s while link AB rotates clockwise with an angular velocity of $\omega_{AB} = 10$ rad/s, determine the angular velocity of gear C.

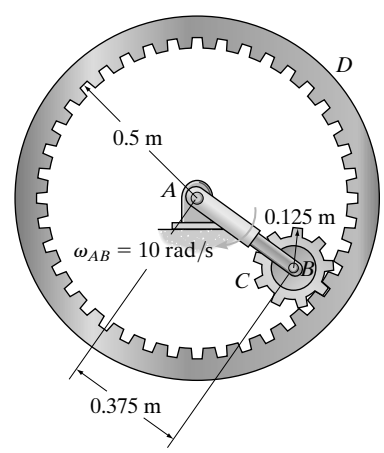

Rotation About a Fixed Axis: Since link AB and gear D rotate about a fixed axis, Fig. a, the velocity of the center B and the contact point of gears D and C is

$$v_B = \omega_{AB} r_B = 10(0.375) = 3.75 \text{ m/s}$$

$$v_P = \omega_D r_P = 5(0.5) = 2.5 \text{ m/s}$$

General Plane Motion: Applying the relative velocity equation and referring to the kinematic diagram of gear C shown in Fig. b,

$$\mathbf{v}_B = \mathbf{v}_P + \omega_C \times r_{B/P}$$

$$-3.75\mathbf{i} = 2.5\mathbf{i} + (\omega_C \mathbf{k}) \times (0.125\mathbf{j})$$

$$-3.75\mathbf{i} = (2.5 - 0.125\omega_C)\mathbf{i}$$

Thus,

$$-3.75 = 2.5 - 0.125\omega_C$$

$$\omega_C = 50 \text{ rad/s} \qquad \textbf{Ans.}$$

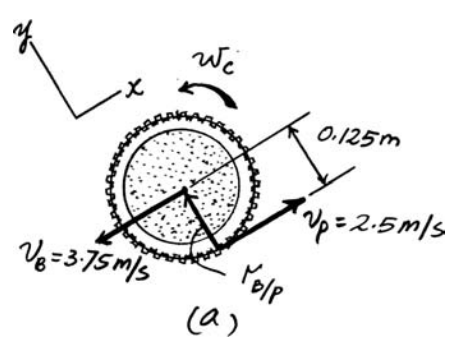

© 2010 Pearson Education, Inc., Upper Saddle River, NJ. All rights reserved. This material is protected under all copyright laws as they currently exist. No portion of this material may be reproduced, in any form or by any means, without permission in writing from the publisher.

•16–81. If the slider block A is moving to the right at $v_A = 8$ ft/s, determine the velocity of blocks B and C at the instant shown. Member CD is pin connected to member ADB.

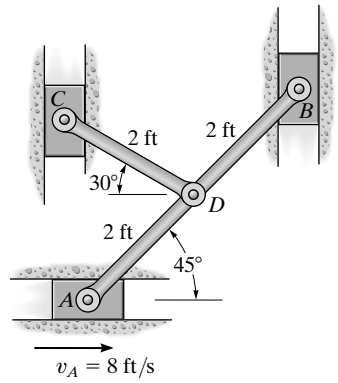

Kinematic Diagram: Block B and C are moving along the guide and directed towards the *positive* y axis and *negative* y axis, respectively. Then, $\mathbf{v}_B = v_B\mathbf{j}$ and $\mathbf{v}_C = -v_C\mathbf{j}$. Since the direction of the velocity of point D is unknown, we can assume that its x and y components are directed in the *positive direction* of their respective axis.

Velocity Equation: Here, $\mathbf{r}_{B/A} = \{4\cos 45°\mathbf{i} + 4\sin 45°\mathbf{j}\}$ ft $= \{2.828\mathbf{i} + 2.828\mathbf{j}\}$ ft and $\mathbf{r}_{D/A} = \{2\cos 45°\mathbf{i} + 2\sin 45°\mathbf{j}\}$ ft $= \{1.414\mathbf{i} + 1.414\mathbf{j}\}$ ft. Applying Eq. 16–16 to link ADB, we have

$$\mathbf{v}_B = \mathbf{v}_A + \omega_{ADB} \times \mathbf{r}_{B/A}$$

$$v_B\mathbf{j} = 8\mathbf{i} + (\omega_{ADB}\mathbf{k}) \times (2.828\mathbf{i} + 2.828\mathbf{j})$$

$$v_B\mathbf{j} = (8 - 2.828\omega_{ADB})\,\mathbf{i} + 2.828\omega_{ADB}\mathbf{j}$$

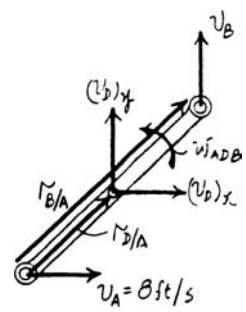

Equating **i** and **j** components gives

$$0 = 8 - 2.828\omega_{ADB} \qquad \textbf{[1]}$$

$$v_B = 2.828\omega_{ADB} \qquad \textbf{[2]}$$

Solving Eqs.[1] and [2] yields

$$\omega_{ADB} = 2.828 \text{ rad/s}$$

$$v_B = 8.00 \text{ ft/s} \uparrow \qquad \textbf{Ans.}$$

The x and y component of velocity of $\mathbf{v}_D$ are given by

$$\mathbf{v}_D = \mathbf{v}_A + \omega_{ADB} \times \mathbf{r}_{D/A}$$

$$(v_D)_x\,\mathbf{i} + (v_D)_y\mathbf{j} = 8\mathbf{i} + (2.828\mathbf{k}) \times (1.414\mathbf{i} + 1.414\mathbf{j})$$

$$(v_D)_x\,\mathbf{i} + (v_D)_y\,\mathbf{j} = 4.00\mathbf{i} + 4.00\mathbf{j}$$

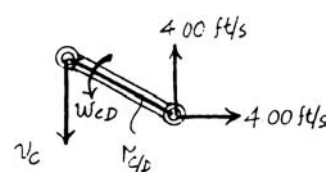

Equating **i** and **j** components gives

$$(v_D)_x = 4.00 \text{ ft/s} \qquad (v_D)_y = 4.00 \text{ ft/s}$$

Here, $r_{C/D} = \{-2\cos 30°\mathbf{i} + 2\sin 30°\mathbf{j}\}$ ft $= \{-1.732\mathbf{i} + 1\mathbf{j}\}$ ft. Applying Eq. 16–16 to link CD, we have

$$\mathbf{v}_C = \mathbf{v}_D + \omega_{CD} \times \mathbf{r}_{C/D}$$

$$-v_C\mathbf{j} = 4.00\mathbf{i} + 4.00\mathbf{j} + (\omega_{CD}\mathbf{k}) \times (-1.732\mathbf{i} + 1\mathbf{j})$$

$$-v_C\,\mathbf{j} = (4.00 - \omega_{CD})\,\mathbf{i} + (4 - 1.732\omega_{CD})\,\mathbf{j}$$

Equating **i** and **j** components gives

$$0 = 4.00 - \omega_{CD} \qquad \textbf{[3]}$$

$$-v_C = 4 - 1.732\omega_{CD} \qquad \textbf{[4]}$$

Solving Eqs. [3] and [4] yields

$$\omega_{CD} = 4.00 \text{ rad/s}$$

$$v_C = 2.93 \text{ ft/s} \downarrow \qquad \textbf{Ans.}$$

© 2010 Pearson Education, Inc., Upper Saddle River, NJ. All rights reserved. This material is protected under all copyright laws as they currently exist. No portion of this material may be reproduced, in any form or by any means, without permission in writing from the publisher.

16–82. Solve Prob. 16–54 using the method of instantaneous center of zero velocity.

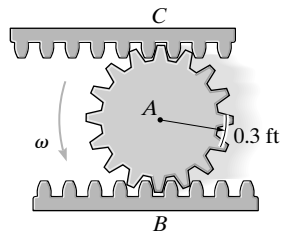

$$v_C = 4 \text{ rad/s}(0.6 \text{ ft}) = 2.40 \text{ ft/s}$$ **Ans.**

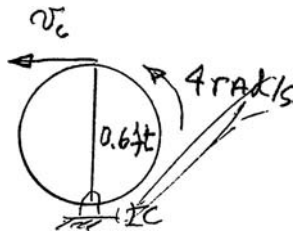

16–83. Solve Prob. 16–56 using the method of instantaneous center of zero velocity.

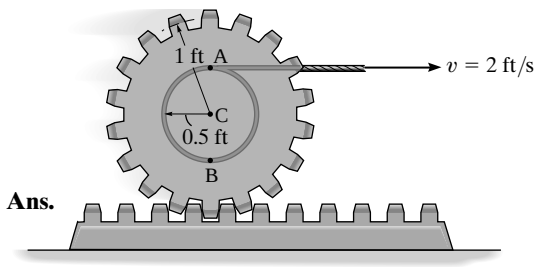

$$\omega = \frac{2}{1.5} = 1.33 \text{ rad/s}$$

$$v_C = 1(1.33) = 1.33 \text{ ft/s} \rightarrow$$ **Ans.**

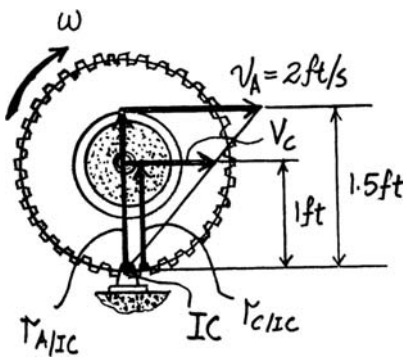

© 2010 Pearson Education, Inc., Upper Saddle River, NJ. All rights reserved. This material is protected under all copyright laws as they currently exist. No portion of this material may be reproduced, in any form or by any means, without permission in writing from the publisher.

***16–84.** Solve Prob. 16–64 using the method of instantaneous center of zero velocity.

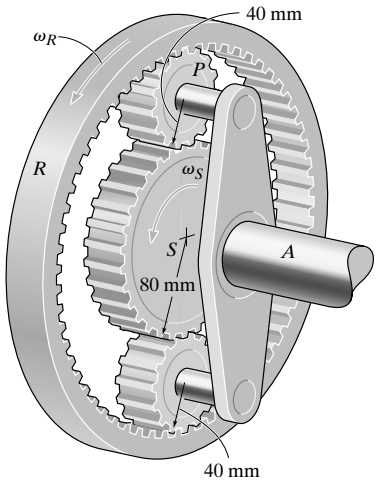

$$v_P = (80)(5) = 400 \text{ mm/s}$$

$$\omega_P = \frac{400}{80} = 5 \text{ rad/s} \quad \circlearrowright \qquad \textbf{Ans.}$$

$$v_C = (5)(40) = 200 \text{ mm/s}$$

$$\omega_A = \frac{200}{(80 + 40)} = 1.67 \text{ rad/s} \quad \circlearrowleft \qquad \textbf{Ans.}$$

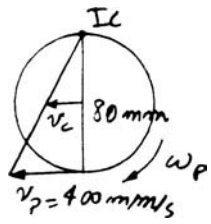

•16–85. Solve Prob. 16–58 using the method of instantaneous center of zero velocity.

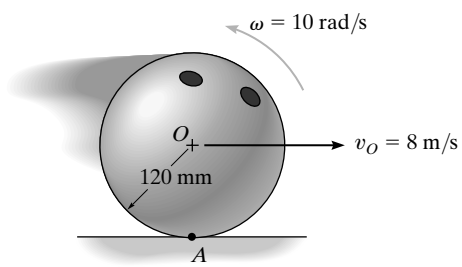

$$r_{OI/C} = \frac{8}{10} = 0.8 \text{ m}$$

$$v_A = 10(0.8 + 0.120) = 9.20 \text{ m/s} \qquad \textbf{Ans.}$$

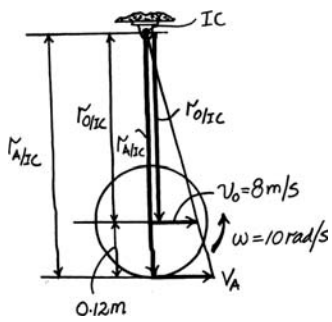

© 2010 Pearson Education, Inc., Upper Saddle River, NJ. All rights reserved. This material is protected under all copyright laws as they currently exist. No portion of this material may be reproduced, in any form or by any means, without permission in writing from the publisher.

16–86. Solve Prob. 16–67 using the method of instantaneous center of zero velocity.

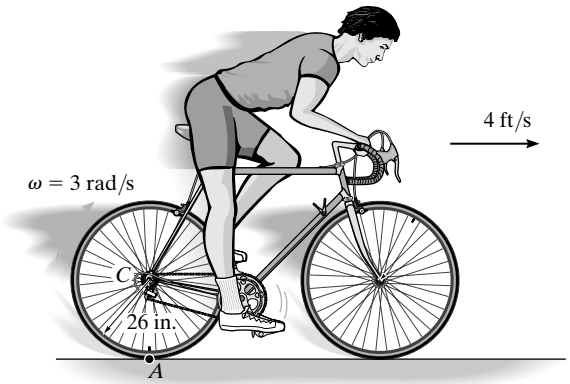

$$r_{C/IC} = \ = \frac{4}{3} = 1.33 \text{ ft}$$

$$r_{A/IC} = \ = \frac{26}{12} - 1.33 \text{ ft} = 0.833 \text{ ft}$$

$$v_A = 3(0.833) = 2.5 \text{ ft/s} \quad \leftarrow$$ **Ans.**

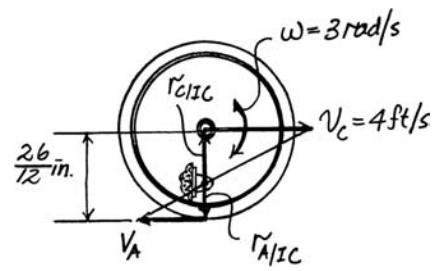

16–87. Solve Prob. 16–68 using the method of instantaneous center of zero velocity.

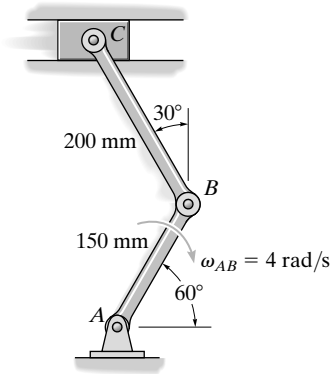

$$v_B = 4(0.150) = 0.6 \text{ m/s}$$

$$\frac{r_{C/IC}}{\sin 120°} = \frac{0.2}{\sin 30°}$$

$$r_{C/IC} = 0.34641 \text{ m}$$

$$\frac{r_{B/IC}}{\sin 30°} = \frac{0.2}{\sin 30°}$$

$$r_{B/IC} = 0.2 \text{ m}$$

$$\omega = \frac{0.6}{0.2} = 3 \text{ rad/s}$$

$$v_C = 0.34641(3) = 1.04 \text{ m/s} \quad \rightarrow$$ **Ans.**

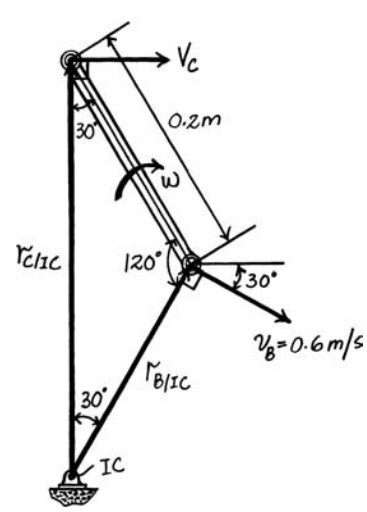

© 2010 Pearson Education, Inc., Upper Saddle River, NJ. All rights reserved. This material is protected under all copyright laws as they currently exist. No portion of this material may be reproduced, in any form or by any means, without permission in writing from the publisher.

***16–88.** The wheel rolls on its hub without slipping on the horizontal surface. If the velocity of the center of the wheel is $v_C = 2$ ft/s to the right, determine the velocities of points A and B at the instant shown.

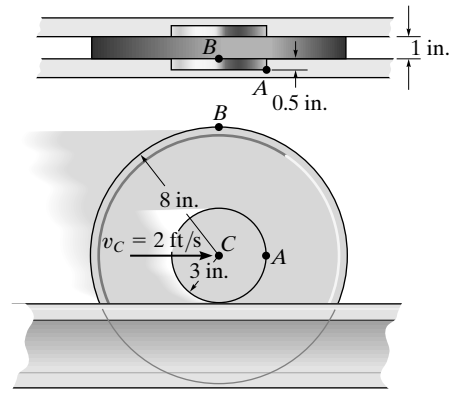

$$v_C = \omega r_{C/IC}$$

$$2 = \omega\left(\frac{3}{12}\right)$$

$$\omega = 8 \text{ rad/s}$$

$$v_B = \omega r_{B/IC} = 8\left(\frac{11}{12}\right) = 7.33 \text{ ft/s} \quad \rightarrow$$ **Ans.**

$$v_A = \omega r_{A/IC} = 8\left(\frac{3\sqrt{2}}{12}\right) = 2.83 \text{ ft/s}$$ **Ans.**

$$\theta_A = \tan^{-1}\left(\frac{3}{3}\right) = 45^\circ \searrow$$ **Ans.**

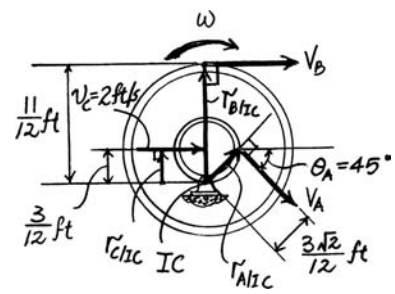

•16–89. If link CD has an angular velocity of $\omega_{CD} = 6$ rad/s, determine the velocity of point E on link BC and the angular velocity of link AB at the instant shown.

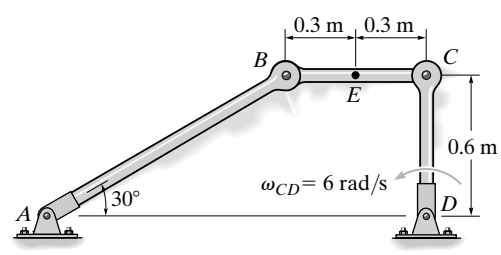

$$v_C = \omega_{CD}\,(r_{CD}) = (6)(0.6) = 3.60 \text{ m/s}$$

$$\omega_{BC} = \frac{v_C}{r_{C/IC}} = \frac{3.60}{0.6 \tan 30^\circ} = 10.39 \text{ rad/s}$$

$$v_B = \omega_{BC}\, r_{B/IC} = (10.39)\left(\frac{0.6}{\cos 30^\circ}\right) = 7.20 \text{ m/s}$$

$$\omega_{AB} = \frac{v_B}{r_{AB}} = \frac{7.20}{\left(\frac{0.6}{\sin 30^\circ}\right)} = 6 \text{ rad/s} \quad \circlearrowleft$$ **Ans.**

$$v_E = \omega_{BC}\, r_{E/IC} = 10.39\sqrt{(0.6 \tan 30^\circ)^2 + (0.3)^2} = 4.76 \text{ m/s}$$ **Ans.**

$$\theta = \tan^{-1}\left(\frac{0.3}{0.6 \tan 30^\circ}\right) = 40.9^\circ \nwarrow$$ **Ans.**

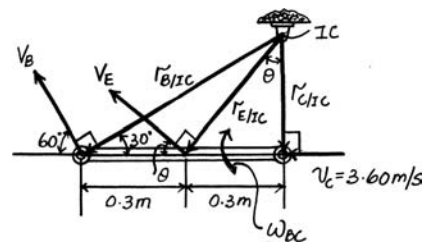

© 2010 Pearson Education, Inc., Upper Saddle River, NJ. All rights reserved. This material is protected under all copyright laws as they currently exist. No portion of this material may be reproduced, in any form or by any means, without permission in writing from the publisher.

16–90. At the instant shown, the truck travels to the right at 3 m/s, while the pipe rolls counterclockwise at $\omega = 6$ rad/s without slipping at B. Determine the velocity of the pipe's center G.

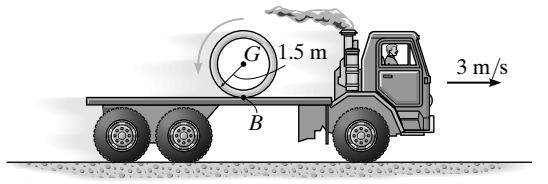

Kinematic Diagram: Since the pipe rolls without slipping, then the velocity of point B must be the same as that of the truck, i.e; $v_B = 3$ m/s.

Instantaneous Center: $r_{B/IC}$ must be determined first in order to locate the the instantaneous center of zero velocity of the pipe.

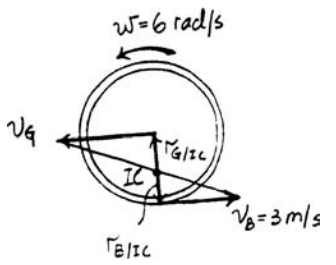

$$v_B = \omega r_{B/IC}$$

$$3 = 6(r_{B/IC})$$

$$r_{B/IC} = 0.5 \text{ m}$$

Thus, $r_{G/IC} = 1.5 - r_{B/IC} = 1.5 - 0.5 = 1.00$ m. Then

$$v_G = \omega r_{G/IC} = 6(1.00) = 6.00 \text{ m/s} \leftarrow \qquad \textbf{Ans.}$$

16–91. If the center O of the gear is given a velocity of $v_O = 10$ m/s, determine the velocity of the slider block B at the instant shown.

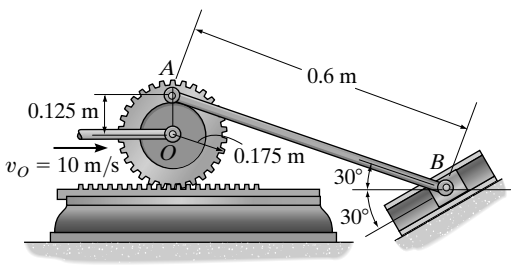

General Plane Motion: Since the gear rack is stationary, the IC of the gear is located at the contact point between the gear and the rack, Fig. a. Here, $r_{O/IC} = 0.175$ m and $r_{A/IC} = 0.6$ m. Thus, the velocity of point A can be determined using the similar triangles shown in Fig. a,

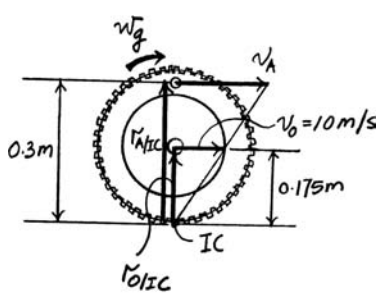

(a)

$$\omega_g = \frac{v_A}{r_{A/IC}} = \frac{v_O}{r_{O/IC}}$$

$$\frac{v_A}{0.3} = \frac{10}{0.175}$$

$$v_A = 17.143 \text{ m/s} \rightarrow$$

The location of the IC for rod AB is indicated in Fig. b. From the geometry shown in Fig. b,

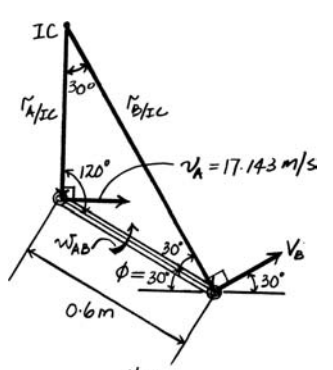

(b)

$$r_{A/IC} = 0.6 \text{ m}$$

$$r_{B/IC} = 2(0.6 \cos 30°) = 1.039 \text{ m}$$

Thus, the angular velocity of the gear can be determined from

$$\omega_{AB} = \frac{v_A}{r_{A/IC}} = \frac{17.143}{0.6} = 28.57 \text{ rad/s}$$

Then,

$$v_B = \omega_{AB} r_{B/IC} = 28.57(1.039) = 29.7 \text{ m/s} \qquad \textbf{Ans.}$$

© 2010 Pearson Education, Inc., Upper Saddle River, NJ. All rights reserved. This material is protected under all copyright laws as they currently exist. No portion of this material may be reproduced, in any form or by any means, without permission in writing from the publisher.

***16–92.** If end A of the cord is pulled down with a velocity of $v_A = 4$ m/s, determine the angular velocity of the spool and the velocity of point C located on the outer rim of the spool.

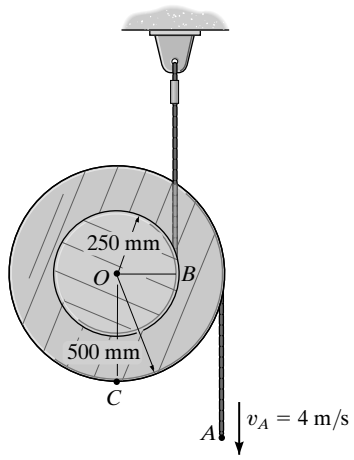

General Plane Motion: Since the contact point B between the rope and the spool is at rest, the IC is located at point B, Fig. a. From the geometry of Fig. a,

$$r_{A/IC} = 0.25 \text{ m}$$

$$r_{C/IC} = \sqrt{0.25^2 + 0.5^2} = 0.5590 \text{ m}$$

$$\phi = \tan^{-1}\left(\frac{0.25}{0.5}\right) = 26.57°$$

Thus, the angular velocity of the spool can be determined from

$$\omega = \frac{v_A}{r_{A/IC}} = \frac{4}{0.25} = 16 \text{rad/s} \qquad \textbf{Ans.}$$

Then,

$$v_C = \omega r_{C/IC} = 16(0.5590) = 8.94 \text{m/s} \qquad \textbf{Ans.}$$

and its direction is

$$\theta = \phi = 26.6° \nwarrow \qquad \textbf{Ans.}$$

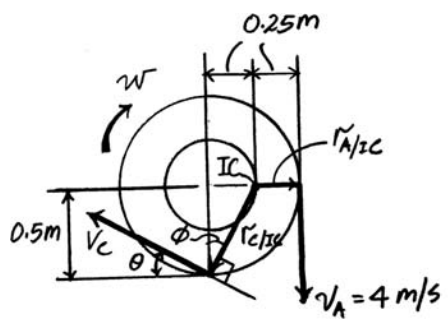

•16–93. If end A of the hydraulic cylinder is moving with a velocity of $v_A = 3$ m/s, determine the angular velocity of rod BC at the instant shown.

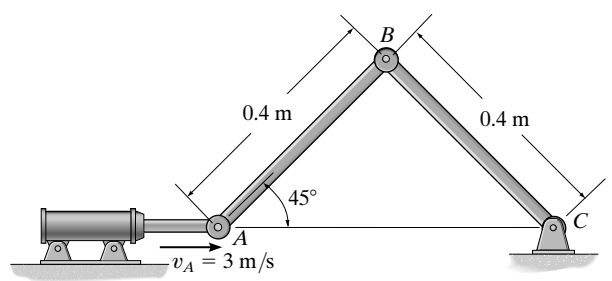

Rotation About a Fixed Axis: Referring to Fig. a,

$$v_B = \omega_{BC} r_B = \omega_{BC}(0.4)$$

General Plane Motion: The location of the IC for rod AB is indicated in Fig. b. From the geometry shown in this figure, we obtain

$$r_{A/IC} = \frac{0.4}{\cos 45°} \qquad r_{A/IC} = 0.5657 \text{ m}$$

$$r_{B/IC} = 0.4 \tan 45° = 0.4 \text{ m}$$

Thus, the angular velocity of rod AB can be determined from

$$\omega_{AB} = \frac{v_A}{r_{A/IC}} = \frac{3}{0.5657} = 5.303 \text{ rad/s}$$

Then,

$$v_B = \omega_{AB} r_{B/IC}$$

$$\omega_{BC}(0.4) = 5.303(0.4)$$

$$\omega_{BC} = 5.30 \text{ rad/s} \qquad \textbf{Ans.}$$

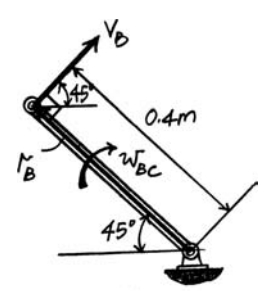

(a)

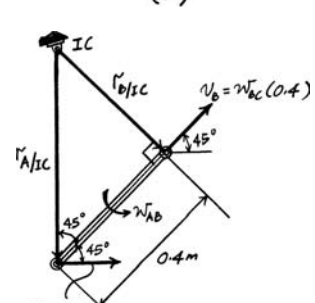

(b)

© 2010 Pearson Education, Inc., Upper Saddle River, NJ. All rights reserved. This material is protected under all copyright laws as they currently exist. No portion of this material may be reproduced, in any form or by any means, without permission in writing from the publisher.

16–94. The wheel is rigidly attached to gear A, which is in mesh with gear racks D and E. If D has a velocity of $v_D = 6$ ft/s to the right and wheel rolls on track C without slipping, determine the velocity of gear rack E.

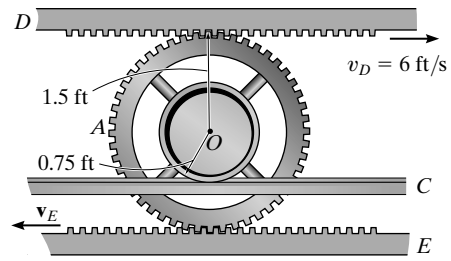

General Plane Motion: Since the wheel rolls without slipping on track C, the IC is located there, Fig. a. Here,

$$r_{D/IC} = 2.25 \text{ ft} \qquad\qquad r_{E/IC} = 0.75 \text{ ft}$$

Thus, the angular velocity of the gear can be determined from

$$\omega = \frac{v_D}{r_{D/IC}} = \frac{6}{2.25} = 2.667 \text{ rad/s}$$

Then,

$$v_E = \omega r_{E/IC} = 2.667(0.75) = 2 \text{ ft/s} \leftarrow \qquad \textbf{Ans.}$$

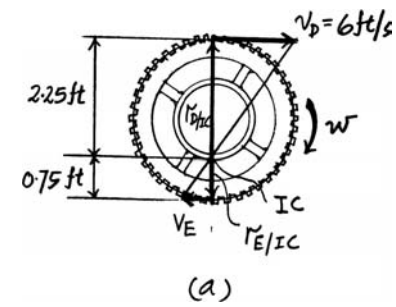

16–95. The wheel is rigidly attached to gear A, which is in mesh with gear racks D and E. If the racks have a velocity of $v_D = 6$ ft/s and $v_E = 10$ ft/s, show that it is necessary for the wheel to slip on the fixed track C. Also find the angular velocity of the gear and the velocity of its center O.

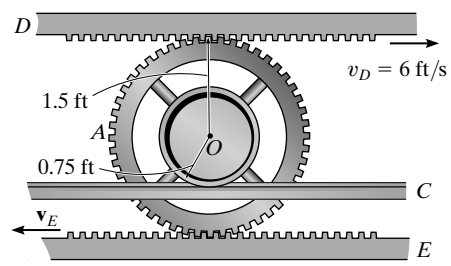

General Plane Motion: The location of the IC can be found using the similar triangles shown in Fig. a,

$$\frac{r_{D/IC}}{6} = \frac{3 - r_{D/IC}}{10} \qquad\qquad r_{D/IC} = 1.125 \text{ ft}$$

Thus,

$$r_{O/IC} = 1.5 - r_{D/IC} = 1.5 - 1.125 = 0.375\text{ft}$$

$$r_{F/IC} = 2.25 - r_{D/IC} = 2.25 - 1.125 = 1.125\text{ft}$$

Thus, the angular velocity of the gear is

$$\omega = \frac{v_D}{r_{D/IC}} = \frac{6}{1.125} = 5.333 \text{ rad/s} = 5.33 \text{ rad/s} \qquad \textbf{Ans.}$$

The velocity of the contact point F between the wheel and the track is

$$v_F = \omega r_{F/IC} = 5.333(1.125) = 6 \text{ ft/s} \leftarrow$$

Since $v_F \neq 0$, **the wheel slips on the track** **(Q.E.D.)**

The velocity of center O of the gear is

$$v_O = \omega r_{O/IC} = 5.333(0.375) = 2\text{ft/s} \leftarrow \qquad \textbf{Ans.}$$

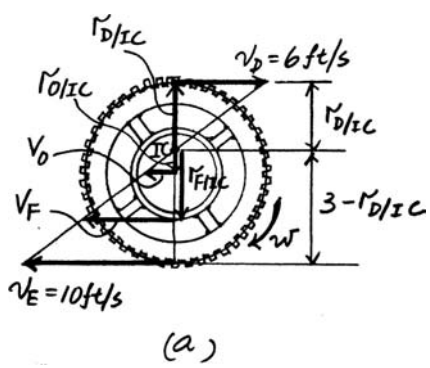

© 2010 Pearson Education, Inc., Upper Saddle River, NJ. All rights reserved. This material is protected under all copyright laws as they currently exist. No portion of this material may be reproduced, in any form or by any means, without permission in writing from the publisher.

***16–96.** If C has a velocity of $v_C = 3$ m/s, determine the angular velocity of the wheel at the instant shown.

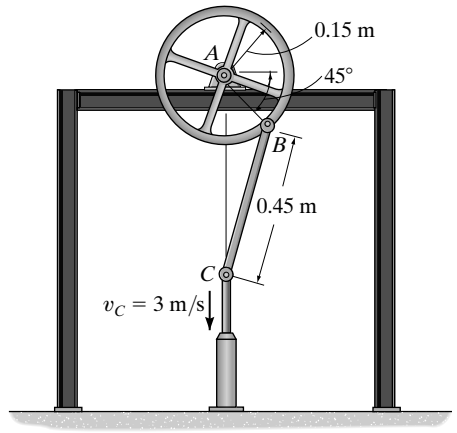

Rotation About a Fixed Axis: Referring to Fig. *a*,

$$v_B = \omega_W r_B = \omega_W(0.15)$$

General Plane Motion: Applying the law of sines to the geometry shown in Fig. *b*,

$$\frac{\sin\phi}{0.15} = \frac{\sin 45°}{0.45} \qquad \phi = 13.63°$$

The location of the IC for rod BC is indicated in Fig. *c*. Applying the law of sines to the geometry of Fig. *c*,

$$\frac{r_{C/IC}}{\sin 58.63°} = \frac{0.45}{\sin 45°} \qquad r_{C/IC} = 0.5434 \text{ m}$$

$$\frac{r_{B/IC}}{\sin 76.37°} = \frac{0.45}{\sin 45°} \qquad r_{B/IC} = 0.6185 \text{ m}$$

Thus, the angular velocity of rod BC is

$$\omega_{BC} = \frac{v_C}{r_{C/IC}} = \frac{3}{0.5434} = 5.521 \text{ rad/s}$$

and

$$v_B = \omega_{BC}\, r_{B/IC}$$

$$\omega_W(0.15) = 5.521(0.6185)$$

$$\omega_W = 22.8 \text{ rad/s} \qquad \textbf{Ans.}$$

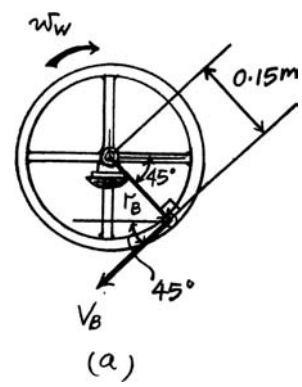

(a)

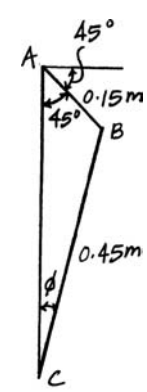

(b)

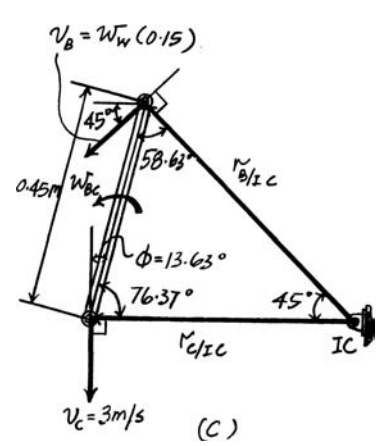

(c)

© 2010 Pearson Education, Inc., Upper Saddle River, NJ. All rights reserved. This material is protected under all copyright laws as they currently exist. No portion of this material may be reproduced, in any form or by any means, without permission in writing from the publisher.

•16–97. The oil pumping unit consists of a walking beam AB, connecting rod BC, and crank CD. If the crank rotates at a constant rate of 6 rad/s, determine the speed of the rod hanger H at the instant shown. *Hint:* Point B follows a circular path about point E and therefore the velocity of B is *not* vertical.

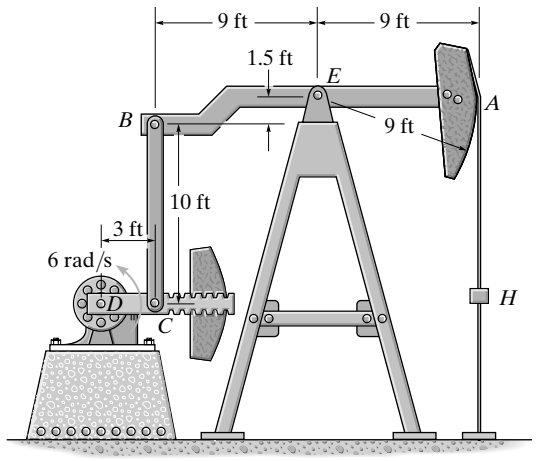

Kinematic Diagram: From the geometry, $\theta = \tan^{-1}\left(\frac{1.5}{9}\right) = 9.462°$ and $r_{BE} = \sqrt{9^2 + 1.5^2} = 9.124$ ft. Since crank CD and beam BE are rotating about fixed points D and E, then $\mathbf{v}_C$ and $\mathbf{v}_B$ are always directed perpendicular to crank CD and beam BE, respectively. The magnitude of $\mathbf{v}_C$ and $\mathbf{v}_B$ are $v_C = \omega_{CD} r_{CD} = 6(3) = 18.0$ ft/s and $v_B = \omega_{BE} r_{BE} = 9.124\omega_{BE}$. At the instant shown, $\mathbf{v}_C$ is directed vertically while $\mathbf{v}_B$ is directed with an angle 9.462° with the vertical.

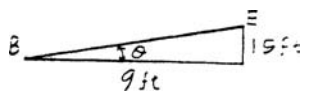

Instantaneous Center: The instantaneous center of zero velocity of link BC at the instant shown is located at the intersection point of extended lines drawn perpendicular from $\mathbf{v}_B$ and $\mathbf{v}_C$. From the geometry

$$r_{B/IC} = \frac{10}{\sin 9.462°} = 60.83 \text{ ft}$$

$$r_{C/IC} = \frac{10}{\tan 9.462°} = 60.0 \text{ ft}$$

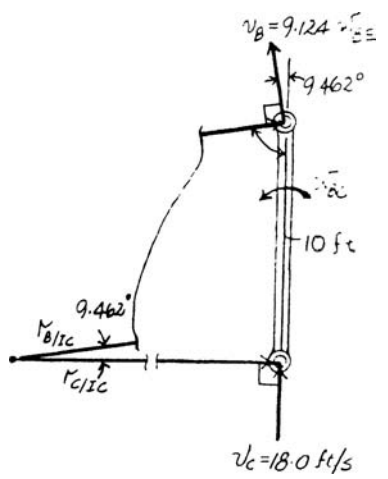

The angular velocity of link BC is given by

$$\omega_{BC} = \frac{v_C}{r_{C/IC}} = \frac{18.0}{60.0} = 0.300 \text{ rad/s}$$

Thus, the angular velocity of beam BE is given by

$$v_B = \omega_{BC} r_{B/IC}$$

$$9.124\omega_{BE} = 0.300(60.83)$$

$$\omega_{BE} = 2.00 \text{ rad/s}$$

The speed of rod hanger H is given by

$$v_H = \omega_{BE} r_{EA} = 2.00(9) = 18.0 \text{ ft/s} \qquad \textbf{Ans.}$$

© 2010 Pearson Education, Inc., Upper Saddle River, NJ. All rights reserved. This material is protected under all copyright laws as they currently exist. No portion of this material may be reproduced, in any form or by any means, without permission in writing from the publisher.

16–98. If the hub gear H and ring gear R have angular velocities $\omega_H = 5$ rad/s and $\omega_R = 20$ rad/s, respectively, determine the angular velocity ω_S of the spur gear S and the angular velocity of arm OA.

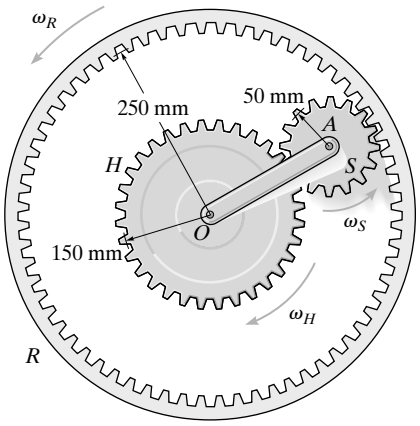

$$\frac{5}{0.1 - x} = \frac{0.75}{x}$$

$$x = 0.01304 \text{ m}$$

$$\omega_s = \frac{0.75}{0.01304} = 57.5 \text{ rad/s} \quad \circlearrowleft \qquad \textbf{Ans.}$$

$$v_A = 57.5(0.05 - 0.01304) = 2.125 \text{ m/s}$$

$$\omega_{OA} = \frac{2.125}{0.2} = 10.6 \text{ rad/s} \quad \circlearrowleft \qquad \textbf{Ans.}$$

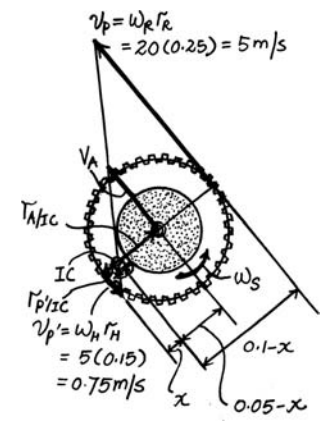

16–99. If the hub gear H has an angular velocity $\omega_H = 5$ rad/s, determine the angular velocity of the ring gear R so that the arm OA which is pinned to the spur gear S remains stationary ($\omega_{OA} = 0$). What is the angular velocity of the spur gear?

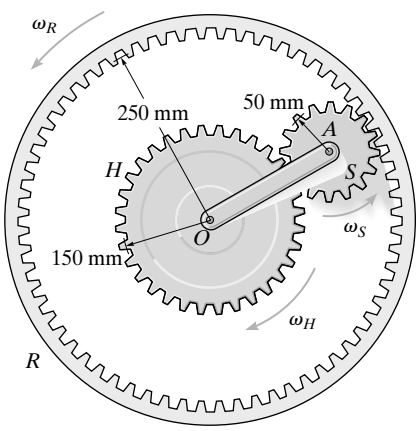

The IC is at A.

$$\omega_S = \frac{0.75}{0.05} = 15.0 \text{ rad/s} \qquad \textbf{Ans.}$$

$$\omega_R = \frac{0.75}{0.250} = 3.00 \text{ rad/s} \qquad \textbf{Ans.}$$

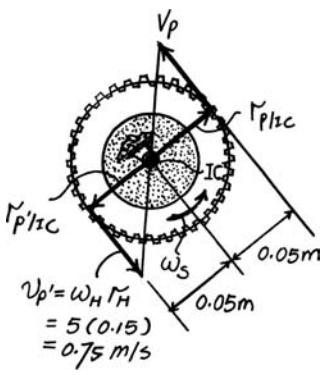

© 2010 Pearson Education, Inc., Upper Saddle River, NJ. All rights reserved. This material is protected under all copyright laws as they currently exist. No portion of this material may be reproduced, in any form or by any means, without permission in writing from the publisher.

***16–100.** If rod AB is rotating with an angular velocity $\omega_{AB} = 3$ rad/s, determine the angular velocity of rod BC at the instant shown.

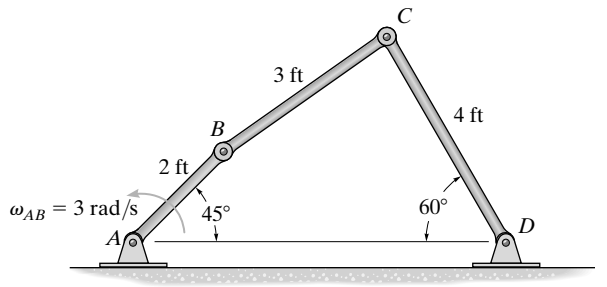

Kinematic Diagram: From the geometry, $\theta = \sin^{-1}\left(\dfrac{4\sin 60° - 2\sin 45°}{3}\right) = 43.10°$. Since links AB and CD is rotating about fixed points A and D, then $\mathbf{v}_B$ and $\mathbf{v}_C$ are always directed perpendicular to links AB and CD, respectively. The magnitude of $\mathbf{v}_B$ and $\mathbf{v}_C$ are $v_B = \omega_{AB} r_{AB} = 3(2) = 6.00$ ft/s and $v_C = \omega_{CD} r_{CD} = 4\omega_{CD}$. At the instant shown, $\mathbf{v}_B$ is directed at an angle of 45° while $\mathbf{v}_C$ is directed at 30°

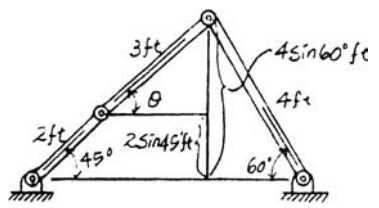

Instantaneous Center: The instantaneous center of zero velocity of link BC at the instant shown is located at the intersection point of extended lines drawn perpendicular from $\mathbf{v}_B$ and $\mathbf{v}_C$. Using law of sines, we have

$$\frac{r_{B/IC}}{\sin 103.1°} = \frac{3}{\sin 75°} \qquad r_{B/IC} = 3.025 \text{ ft}$$

$$\frac{r_{C/IC}}{\sin 1.898°} = \frac{3}{\sin 75°} \qquad r_{C/IC} = 0.1029 \text{ ft}$$

The angular velocity of link BC is given by

$$\omega_{BC} = \frac{v_B}{r_{B/IC}} = \frac{6.00}{3.025} = 1.983 \text{ rad/s} = 1.98 \text{ rad/s} \qquad \textbf{Ans.}$$

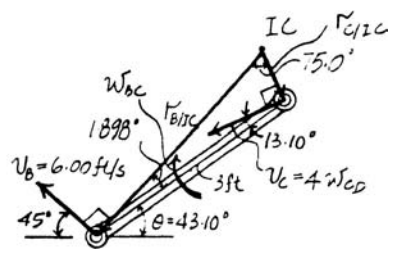

© 2010 Pearson Education, Inc., Upper Saddle River, NJ. All rights reserved. This material is protected under all copyright laws as they currently exist. No portion of this material may be reproduced, in any form or by any means, without permission in writing from the publisher.

•16–101. If rod AB is rotating with an angular velocity $\omega_{AB} = 3$ rad/s, determine the angular velocity of rod CD at the instant shown.

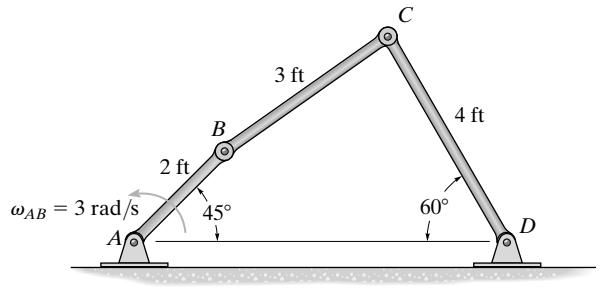

Kinematic Diagram: From the geometry. $\theta = \sin^{-1}\left(\dfrac{4\sin 60° - 2\sin 45°}{3}\right) = 43.10°$. Since links AB and CD is rotating about fixed points A and D, then $\mathbf{v}_B$ and $\mathbf{v}_C$ are always directed perpendicular to links AB and CD, respectively. The magnitude of $\mathbf{v}_B$ and $\mathbf{v}_C$ are $v_B = \omega_{AB} r_{AB} = 3(2) = 6.00$ ft/s and $v_C = \omega_{CD} r_{CD} = 4\omega_{CD}$. At the instant shown, $\mathbf{v}_B$ is directed at an angle of 45° while $\mathbf{v}_C$ is directed at 30°.

Instantaneous Center: The instantaneous center of zero velocity of link BC at the instant shown is located at the intersection point of extended lines drawn perpendicular from $\mathbf{v}_B$ and $\mathbf{v}_C$. Using law of sines, we have

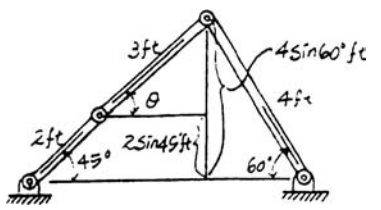

$$\frac{r_{B/IC}}{\sin 103.1°} = \frac{3}{\sin 75°} \qquad r_{B/IC} = 3.025 \text{ ft}$$

$$\frac{r_{C/IC}}{\sin 1.898°} = \frac{3}{\sin 75°} \qquad r_{C/IC} = 0.1029 \text{ ft}$$

The angular velocity of link BC is given by

$$\omega_{BC} = \frac{v_B}{r_{B/IC}} = \frac{6.00}{3.025} = 1.983 \text{ rad/s}$$

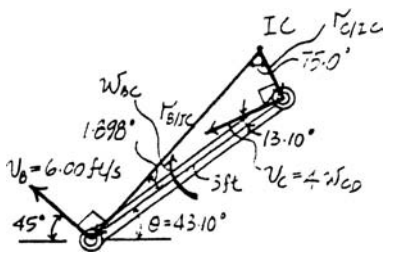

Thus, the angular velocity of link CD is given by

$$v_C = \omega_{BC} r_{C/IC}$$

$$4\omega_{CD} = 1.983(0.1029)$$

$$\omega_{CD} = 0.0510 \text{ rad/s} \qquad \textbf{Ans.}$$

© 2010 Pearson Education, Inc., Upper Saddle River, NJ. All rights reserved. This material is protected under all copyright laws as they currently exist. No portion of this material may be reproduced, in any form or by any means, without permission in writing from the publisher.

16–102. The mechanism used in a marine engine consists of a crank AB and two connecting rods BC and BD. Determine the velocity of the piston at C the instant the crank is in the position shown and has an angular velocity of 5 rad/s.

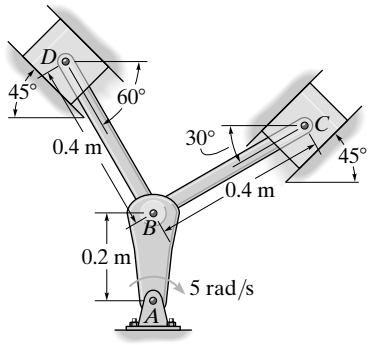

$v_B = 0.2(5) = 1 \text{ m/s} \rightarrow$

Member BC:

$$\frac{r_{C/IC}}{\sin 60°} = \frac{0.4}{\sin 45°}$$

$r_{C/IC} = 0.4899 \text{ m}$

$$\frac{r_{B/IC}}{\sin 75°} = \frac{0.4}{\sin 45°}$$

$r_{B/IC} = 0.5464 \text{ m}$

$$\omega_{BC} = \frac{1}{0.5464} = 1.830 \text{ rad/s}$$

$v_C = 0.4899(1.830) = 0.897 \text{ m/s} \nearrow$ **Ans.**

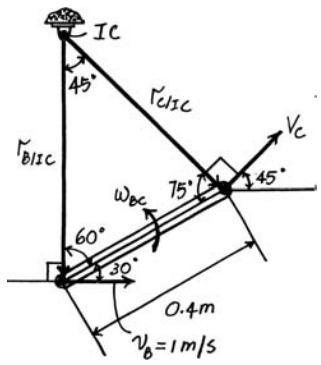

16–103. The mechanism used in a marine engine consists of a crank AB and two connecting rods BC and BD. Determine the velocity of the piston at D the instant the crank is in the position shown and has an angular velocity of 5 rad/s.

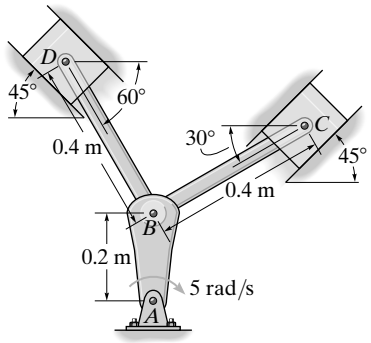

$v_B = 0.2(5) = 1 \text{ m/s} \rightarrow$

Member BD:

$$\frac{r_{B/IC}}{\sin 105°} = \frac{0.4}{\sin 45°}$$

$r_{B/IC} = 0.54641 \text{ m}$

$$\frac{r_{D/IC}}{\sin 30°} = \frac{0.4}{\sin 45°}$$

$r_{D/IC} = 0.28284 \text{ m}$

$$\omega_{BD} = \frac{1}{0.54641} = 1.830 \text{ rad/s}$$

$v_D = 1.830(0.28284) = 0.518 \text{ m/s} \searrow$ **Ans.**

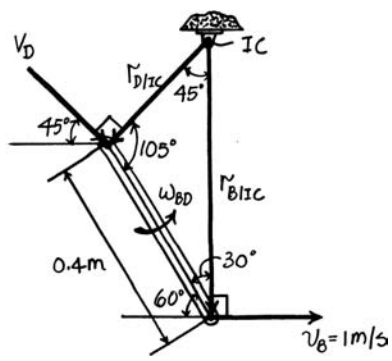

© 2010 Pearson Education, Inc., Upper Saddle River, NJ. All rights reserved. This material is protected under all copyright laws as they currently exist. No portion of this material may be reproduced, in any form or by any means, without permission in writing from the publisher.

***16–104.** If flywheel A is rotating with an angular velocity of $\omega_A = 10$ rad/s, determine the angular velocity of wheel B at the instant shown.

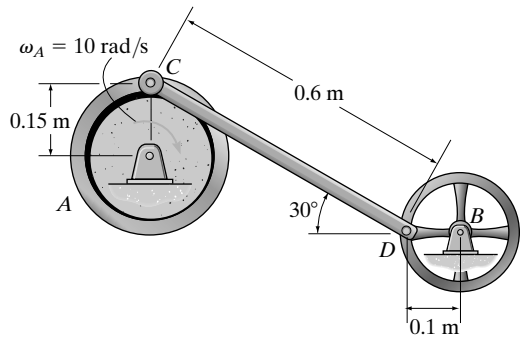

Rotation About a Fixed Axis: Referring to Figs. a and b,

$$v_C = \omega_A r_C = 10(0.15) = 1.5 \text{ m/s} \rightarrow$$

$$v_D = \omega_B r_D = \omega_B(0.1) \downarrow$$

General Plane Motion: The location of the IC for rod CD is indicated in Fig. c. From the geometry of this figure, we obtain

$$r_{C/IC} = 0.6 \sin 30° = 0.3 \text{ m}$$

$$r_{D/IC} = 0.6 \cos 30° = 0.5196 \text{ m}$$

Thus, the angular velocity of rod CD can be determined from

$$\omega_{CD} = \frac{v_D}{r_{C/IC}} = \frac{1.5}{0.3} = 5 \text{ rad/s}$$

Then,

$$v_D = \omega_{CD} r_{D/IC}$$

$$\omega_B(0.1) = 5(0.5196)$$

$$\omega_B = 26.0 \text{ rad/s} \qquad \textbf{Ans.}$$

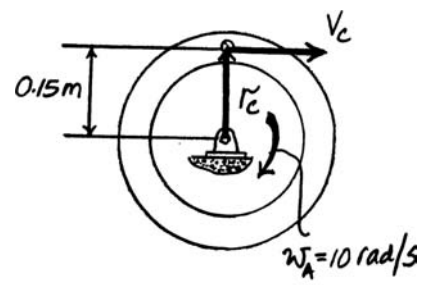

(a)

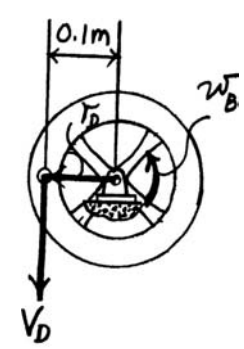

(b)

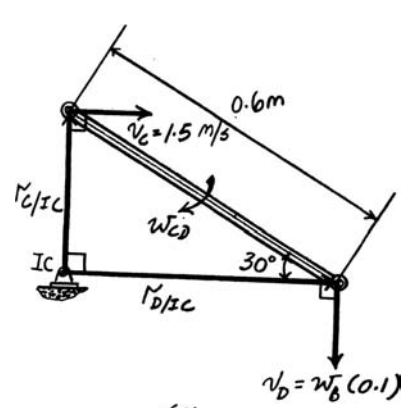

(c)

© 2010 Pearson Education, Inc., Upper Saddle River, NJ. All rights reserved. This material is protected under all copyright laws as they currently exist. No portion of this material may be reproduced, in any form or by any means, without permission in writing from the publisher.

•16–105. If crank AB is rotating with an angular velocity of $\omega_{AB} = 6$ rad/s, determine the velocity of the center O of the gear at the instant shown.

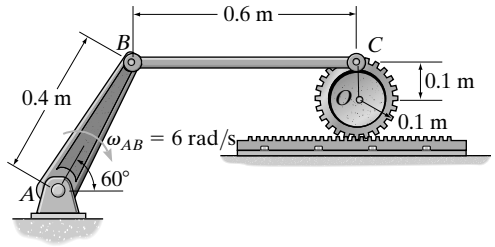

Rotation About a Fixed Axis: Referring to Fig. *a*,

$$v_B = \omega_{AB}\, r_B = 6(0.4) = 2.4 \text{ m/s}$$

General Plane Motion: Since the gear rack is stationary, the *IC* of the gear is located at the contact point between the gear and the rack, Fig. *b*. Thus, $\mathbf{v}_O$ and $\mathbf{v}_C$ can be related using the similar triangles shown in Fig. *b*,

$$\omega_g = \frac{v_C}{r_{C/IC}} = \frac{v_O}{r_{O/IC}}$$

$$\frac{v_C}{0.2} = \frac{v_O}{0.1}$$

$$v_C = 2v_O$$

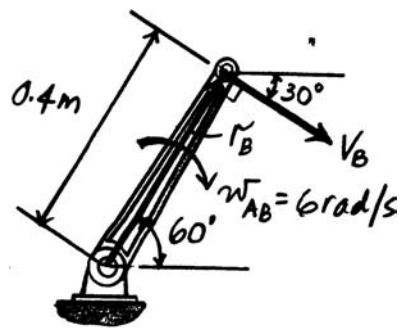

(a)

The location of the *IC* for rod *BC* is indicated in Fig. *c*. From the geometry shown,

$$r_{B/IC} = \frac{0.6}{\cos 60°} = 1.2 \text{ m}$$

$$r_{C/IC} = 0.6 \tan 60° = 1.039 \text{ m}$$

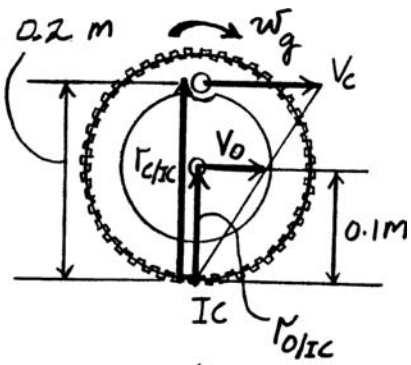

(b)

Thus, the angular velocity of rod *BC* can be determined from

$$\omega_{BC} = \frac{v_B}{r_{B/IC}} = \frac{2.4}{1.2} = 2 \text{ rad/s}$$

Then,

$$v_C = \omega_{BC}\, r_{C/IC}$$

$$2v_O = 2(1.039)$$

$$v_O = 1.04 \text{ m/s} \rightarrow \qquad \textbf{Ans.}$$

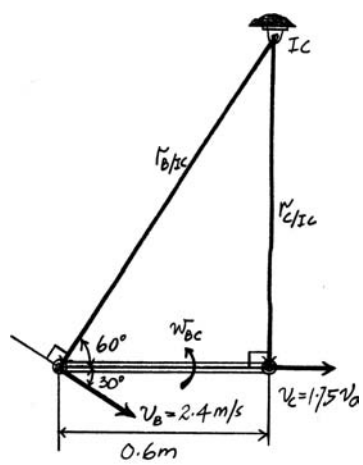

(c)

© 2010 Pearson Education, Inc., Upper Saddle River, NJ. All rights reserved. This material is protected under all copyright laws as they currently exist. No portion of this material may be reproduced, in any form or by any means, without permission in writing from the publisher.

16–106. The square plate is constrained within the slots at A and B. When $\theta = 30°$, point A is moving at $v_A = 8$ m/s. Determine the velocity of point C at this instant.

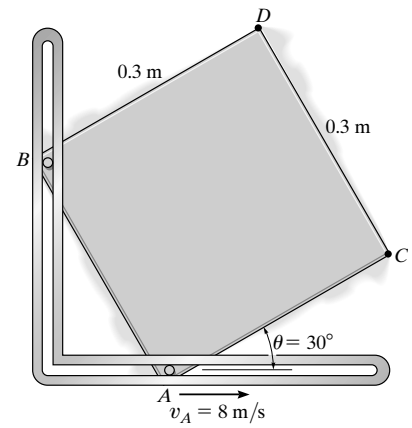

$r_{A/IC} = 0.3 \cos 30° = 0.2598$ m

$\omega = \dfrac{8}{0.2598} = 30.792$ rad/s

$r_{C/IC} = \sqrt{(0.2598)^2 + (0.3)^2 - 2(0.2598)(0.3)\cos 60°} = 0.2821$ m

$v_C = (0.2821)(30.792) = 8.69$ m/s **Ans.**

$\dfrac{\sin \phi}{0.3} = \dfrac{\sin 60°}{0.2821}$

$\phi = 67.09°$

$\theta = 90° - 67.09° = 22.9°$ ↗ **Ans.**

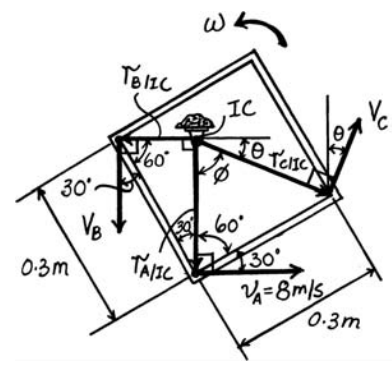

16–107. The square plate is constrained within the slots at A and B. When $\theta = 30°$, point A is moving at $v_A = 8$ m/s. Determine the velocity of point D at this instant.

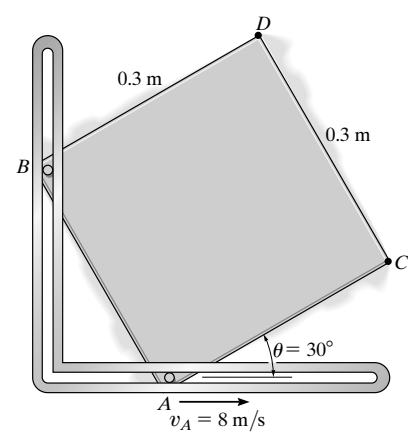

$r_{A/IC} = 0.3 \cos 30° = 0.2598$ m

$\omega = \dfrac{8}{0.2598} = 30.792$ rad/s

$r_{B/IC} = 0.3 \sin 30° = 0.15$ m

$r_{D/IC} = \sqrt{(0.3)^2 + (0.15)^2 - 2(0.3)(0.15)\cos 30°} = 0.1859$ m

$v_D = (30.792)(0.1859) = 5.72$ m/s **Ans.**

$\dfrac{\sin \phi}{0.15} = \dfrac{\sin 30°}{0.1859}$

$\phi = 23.794°$

$\theta = 90° - 30° - 23.794° = 36.2°$ ↖ **Ans.**

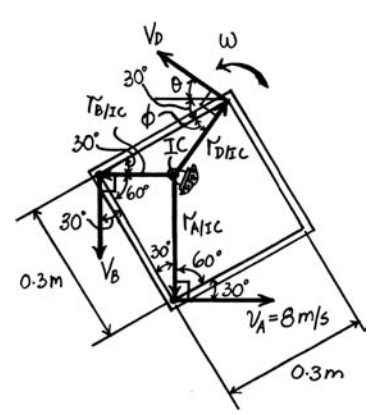

© 2010 Pearson Education, Inc., Upper Saddle River, NJ. All rights reserved. This material is protected under all copyright laws as they currently exist. No portion of this material may be reproduced, in any form or by any means, without permission in writing from the publisher.

***16–108.** The mechanism produces intermittent motion of link AB. If the sprocket S is turning with an angular velocity of $\omega_S = 6$ rad/s, determine the angular velocity of link BC at this instant. The sprocket S is mounted on a shaft which is separate from a collinear shaft attached to AB at A. The pin at C is attached to one of the chain links.

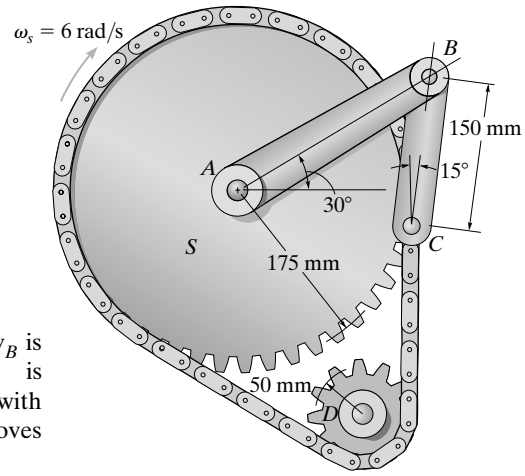

Kinematic Diagram: Since link AB is rotating about the fixed point A, then $\mathbf{v}_B$ is always directed perpendicular to link AB and its magnitude is $v_B = \omega_{AB} r_{AB} = 0.2\omega_{AB}$. At the instant shown, $\mathbf{v}_B$ is directed at an angle 60° with the horizontal. Since point C is attached to the chain, at the instant shown, it moves vertically with a speed of $v_C = \omega_S r_S = 6(0.175) = 1.05$ m/s.

Instantaneous Center: The instantaneous center of zero velocity of link BC at the instant shown is located at the intersection point of extended lines drawn perpendicular from $\mathbf{v}_B$ and $\mathbf{v}_C$. Using law of sines, we have

$$\frac{r_{B/IC}}{\sin 105°} = \frac{0.15}{\sin 30°} \qquad r_{B/IC} = 0.2898 \text{ m}$$

$$\frac{r_{C/IC}}{\sin 45°} = \frac{0.15}{\sin 30°} \qquad r_{C/IC} = 0.2121 \text{ m}$$

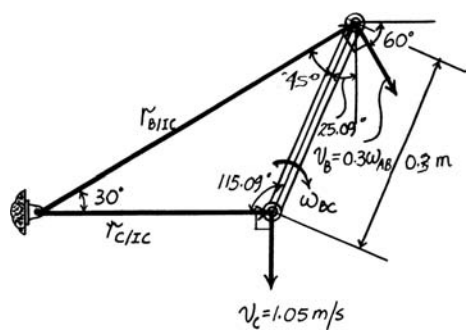

The angular velocity of bar BC is given by

$$\omega_{BC} = \frac{v_C}{r_{C/IC}} = \frac{1.05}{0.2121} = 4.950 \text{ rad/s}$$ **Ans.**

© 2010 Pearson Education, Inc., Upper Saddle River, NJ. All rights reserved. This material is protected under all copyright laws as they currently exist. No portion of this material may be reproduced, in any form or by any means, without permission in writing from the publisher.

•16–109. The disk is moving to the left such that it has an angular acceleration $\alpha = 8\ \text{rad/s}^2$ and angular velocity $\omega = 3\ \text{rad/s}$ at the instant shown. If it does not slip at A, determine the acceleration of point B.

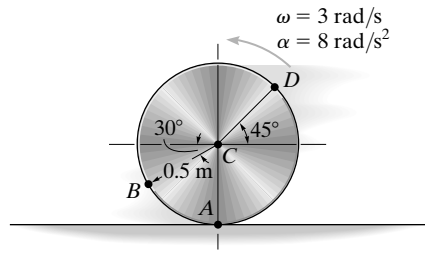

$$a_C = 0.5(8) = 4\ \text{m/s}^2$$

$$\mathbf{a}_B = \mathbf{a}_C + \mathbf{a}_{B/C}$$

$$\mathbf{a}_B = \begin{bmatrix} 4 \\ \leftarrow \end{bmatrix} + \begin{bmatrix} (3)^2(0.5) \\ \measuredangle\ 30^\circ \end{bmatrix} + \begin{bmatrix} (0.5)(8) \\ \searrow\ 30^\circ \end{bmatrix}$$

$(\overset{+}{\rightarrow})$ $\quad (a_B)_x = -4 + 4.5\cos 30^\circ + 4\sin 30^\circ = 1.897\ \text{m/s}^2$

$(+\uparrow)$ $\quad (a_B)_y = 0 + 4.5\sin 30^\circ - 4\cos 30^\circ = -1.214\ \text{m/s}^2$

$$a_B = \sqrt{(1.897)^2 + (-1.214)^2} = 2.25\ \text{m/s}^2 \qquad \textbf{Ans.}$$

$$\theta = \tan^{-1}\left(\frac{1.214}{1.897}\right) = 32.6^\circ\ \searrow \qquad \textbf{Ans.}$$

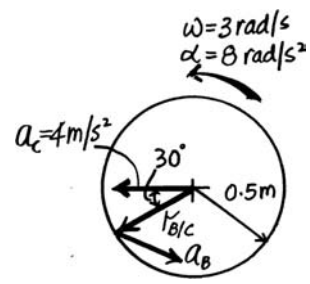

Also,

$$\mathbf{a}_B = \mathbf{a}_C + \alpha \times \mathbf{r}_{B/C} - \omega^2\,\mathbf{r}_{B/C}$$

$$(a_B)_x\,\mathbf{i} + (a_B)_y\,\mathbf{j} = -4\mathbf{i} + (8\mathbf{k}) \times (-0.5\cos 30^\circ\mathbf{i} - 0.5\sin 30^\circ\mathbf{j}) - (3)^2\,(-0.5\cos 30^\circ\mathbf{i} - 0.5\sin 30^\circ\mathbf{j})$$

$(\overset{+}{\rightarrow})$ $\quad (a_B)_x = -4 + 8(0.5\sin 30^\circ) + (3)^2(0.5\cos 30^\circ) = 1.897\ \text{m/s}^2$

$(+\uparrow)$ $\quad (a_B)_y = 0 - 8(0.5\cos 30^\circ) + (3)^2\,(0.5\sin 30^\circ) = -1.214\ \text{m/s}^2$

$$\theta = \tan^{-1}\left(\frac{1.214}{1.897}\right) = 32.6^\circ\ \searrow \qquad \textbf{Ans.}$$

$$a_B = \sqrt{(1.897)^2 + (-1.214)^2} = 2.25\ \text{m/s}^2 \qquad \textbf{Ans.}$$

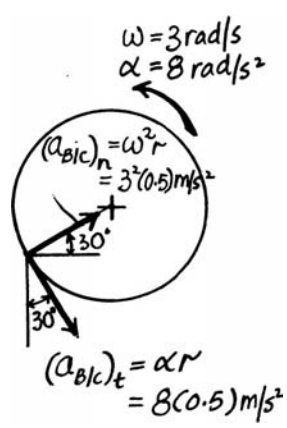

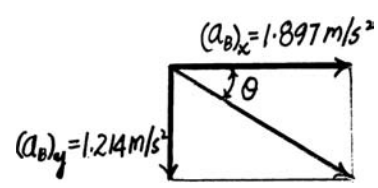

© 2010 Pearson Education, Inc., Upper Saddle River, NJ. All rights reserved. This material is protected under all copyright laws as they currently exist. No portion of this material may be reproduced, in any form or by any means, without permission in writing from the publisher.

16–110. The disk is moving to the left such that it has an angular acceleration $\alpha = 8\ \text{rad/s}^2$ and angular velocity $\omega = 3\ \text{rad/s}$ at the instant shown. If it does not slip at A, determine the acceleration of point D.

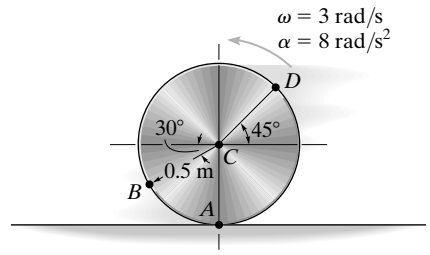

$$a_C = 0.5(8) = 4\ \text{m/s}^2$$

$$\mathbf{a}_D = \mathbf{a}_C + \mathbf{a}_{D/C}$$

$$\mathbf{a}_D = \begin{bmatrix} 4 \\ \leftarrow \end{bmatrix} + \begin{bmatrix} (3)^2(0.5) \\ \swarrow 45^\circ \end{bmatrix} + \begin{bmatrix} 8\,(0.5) \\ 45^\circ \nwarrow \end{bmatrix}$$

$(\overset{+}{\rightarrow})$ $\quad (a_D)_x = -4 - 4.5 \sin 45^\circ - 4 \cos 45^\circ = -10.01\ \text{m/s}^2$

$(+\uparrow)$ $\quad (a_D)_y = 0 - 4.5 \cos 45^\circ + 4 \sin 45^\circ = -0.3536\ \text{m/s}^2$

$$\theta = \tan^{-1}\left(\frac{0.3536}{10.01}\right) = 2.02^\circ \ \nwarrow \qquad \textbf{Ans.}$$

$$a_D = \sqrt{(-10.01)^2 + (-0.3536)^2} = 10.0\ \text{m/s}^2 \qquad \textbf{Ans.}$$

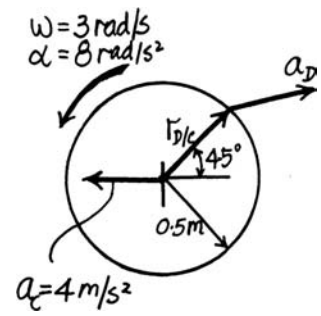

Also,

$$\mathbf{a}_D = \mathbf{a}_C + \alpha \times \mathbf{r}_{D/C} - \omega^2\, \mathbf{r}_{D/C}$$

$$(a_D)_x\, \mathbf{i} + (a_D)_y\, \mathbf{j} = -4\mathbf{i} + (8\mathbf{k}) \times (0.5 \cos 45^\circ \mathbf{i} + 0.5 \sin 45^\circ \mathbf{j}) - (3)^2\, (0.5 \cos 45^\circ \mathbf{i} + 0.5 \sin 45^\circ \mathbf{j})$$

$(\overset{+}{\rightarrow})$ $\quad (a_D)_x = -4 - 8(0.5 \sin 45^\circ) - (3)^2(0.5 \cos 45^\circ) = -10.01\ \text{m/s}^2$

$(+\uparrow)$ $\quad (a_D)_y = +8(0.5 \cos 45^\circ) - (3)^2\, (0.5 \sin 45^\circ) = -0.3536\ \text{m/s}^2$

$$\theta = \tan^{-1}\left(\frac{0.3536}{10.01}\right) = 2.02^\circ \ \nwarrow \qquad \textbf{Ans.}$$

$$a_D = \sqrt{(-10.01)^2 + (-0.3536)^2} = 10.0\ \text{m/s}^2 \qquad \textbf{Ans.}$$

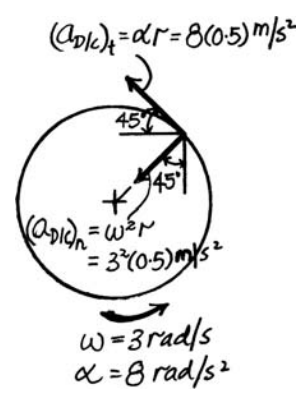

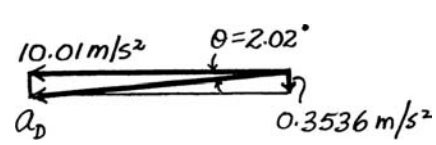

© 2010 Pearson Education, Inc., Upper Saddle River, NJ. All rights reserved. This material is protected under all copyright laws as they currently exist. No portion of this material may be reproduced, in any form or by any means, without permission in writing from the publisher.

16–111. The hoop is cast on the rough surface such that it has an angular velocity $\omega = 4$ rad/s and an angular acceleration $\alpha = 5$ rad/s^2. Also, its center has a velocity $v_O = 5$ m/s and a deceleration $a_O = 2$ m/s^2. Determine the acceleration of point A at this instant.

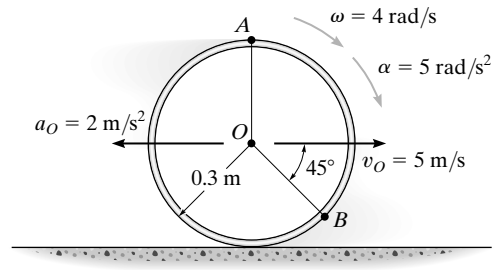

$$\mathbf{a}_A = \mathbf{a}_O + \mathbf{a}_{A/O}$$

$$\mathbf{a}_A = \left[\underset{\leftarrow}{2}\right] + \left[\underset{\downarrow}{(4)^2(0.3)}\right] + \left[\underset{\rightarrow}{5(0.3)}\right]$$

$$\mathbf{a}_A = \left[\underset{\leftarrow}{0.5}\right] + \left[\underset{\downarrow}{4.8}\right]$$

$$a_A = 4.83 \text{ m/s}^2 \qquad \textbf{Ans.}$$

$$\theta = \tan^{-1}\left(\frac{4.8}{0.5}\right) = 84.1^\circ \qquad \textbf{Ans.}$$

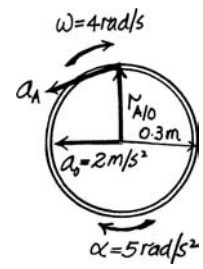

Also,

$$\mathbf{a}_A = \mathbf{a}_O - \omega^2\mathbf{r}_{A/O} + \alpha \times \mathbf{r}_{A/O}$$

$$\mathbf{a}_A = -2\mathbf{i} - (4)^2(0.3\mathbf{j}) + (-5\mathbf{k}) \times (0.3\mathbf{j})$$

$$\mathbf{a}_A = \{-0.5\mathbf{i} - 4.8\mathbf{j}\} \text{ m/s}^2$$

$$a_A = 4.83 \text{ m/s}^2 \qquad \textbf{Ans.}$$

$$\theta = \tan^{-1}\left(\frac{4.8}{0.5}\right) = 84.1^\circ \qquad \textbf{Ans.}$$

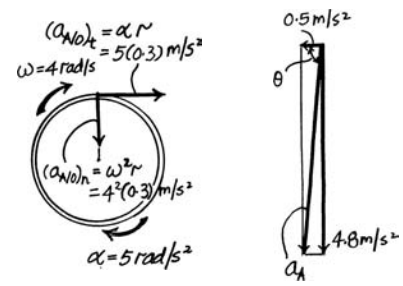

***16–112.** The hoop is cast on the rough surface such that it has an angular velocity $\omega = 4$ rad/s and an angular acceleration $\alpha = 5$ rad/s^2. Also, its center has a velocity of $v_O = 5$ m/s and a deceleration $a_O = 2$ m/s^2. Determine the acceleration of point B at this instant.

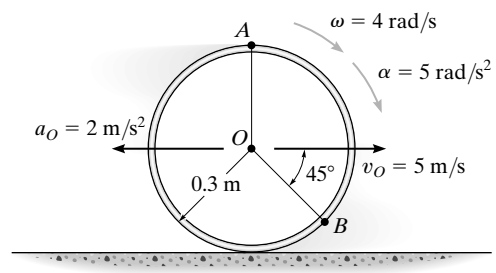

$$\mathbf{a}_B = \mathbf{a}_O + \mathbf{a}_{B/O}$$

$$\mathbf{a}_B = \left[\underset{\leftarrow}{2}\right] + \left[\underset{\swarrow}{5(0.3)}\right] + \left[\underset{\nwarrow}{(4)^2(0.3)}\right]$$

$$\mathbf{a}_B = \left[\underset{\leftarrow}{6.4548}\right] + \left[\underset{\uparrow}{2.333}\right]$$

$$a_B = 6.86 \text{ m/s}^2 \qquad \textbf{Ans.}$$

$$\theta = \tan^{-1}\left(\frac{2.333}{6.4548}\right) = 19.9^\circ \nwarrow$$

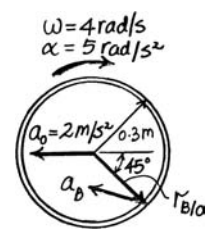

Also:

$$\mathbf{a}_B = \mathbf{a}_O + \alpha \times \mathbf{r}_{B/O} - \omega^2\mathbf{r}_{B/O}$$

$$\mathbf{a}_B = -2\mathbf{i} + (-5\mathbf{k}) \times (0.3\cos 45^\circ\mathbf{i} - 0.3\sin 45^\circ\mathbf{j}) - (4)^2(0.3\cos 45^\circ\mathbf{i} - 0.3\sin 45^\circ\mathbf{j})$$

$$\mathbf{a}_B = \{-6.4548\mathbf{i} + 2.333\mathbf{j}\} \text{ m/s}^2$$

$$a_B = 6.86 \text{ m/s}^2 \qquad \textbf{Ans.}$$

$$\theta = \tan^{-1}\left(\frac{2.333}{6.4548}\right) = 19.9^\circ \nwarrow$$

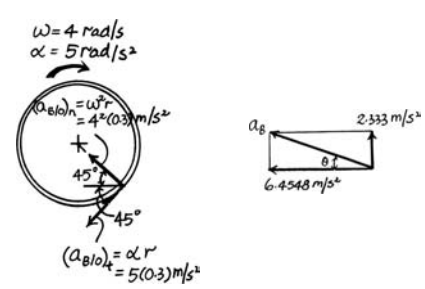

© 2010 Pearson Education, Inc., Upper Saddle River, NJ. All rights reserved. This material is protected under all copyright laws as they currently exist. No portion of this material may be reproduced, in any form or by any means, without permission in writing from the publisher.

•16–113. At the instant shown, the slider block B is traveling to the right with the velocity and acceleration shown. Determine the angular acceleration of the wheel at this instant.

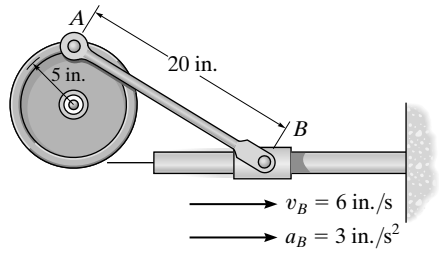

Velocity Analysis: The angular velocity of link AB can be obtained by using the method of instantaneous center of zero velocity. Since $\mathbf{v}_A$ and $\mathbf{v}_B$ are parallel, $r_{A/IC} = r_{B/IC} = \infty$. Thus, $\omega_{AB} = 0$. Since $\omega_{AB} = 0$, $v_A = v_B = 6$ in./s. Thus, the angular velocity of the wheel is $\omega_W = \dfrac{v_A}{r_{OA}} = \dfrac{6}{5} = 1.20$ rad/s.

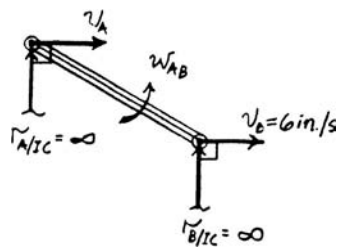

Acceleration Equation: The acceleration of point A can be obtained by analyzing the angular motion of link OA about point O. Here, $\mathbf{r}_{OA} = \{5\mathbf{j}\}$ in..

$$\mathbf{a}_A = \alpha_W \times \mathbf{r}_{OA} - \omega_W^2\,\mathbf{r}_{OA}$$

$$= (-\alpha_W\,\mathbf{k}) \times (5\mathbf{j}) - 1.20^2\,(5\mathbf{j})$$

$$= \{5\alpha_W\,\mathbf{i} - 7.20\mathbf{j}\}\ \text{in./s}^2$$

Link AB is subjected to general plane motion. Applying Eq. 16–18 with $\mathbf{r}_{B/A} = \{20\cos 30°\mathbf{i} - 20\sin 30°\mathbf{j}\}$ in. $= \{17.32\mathbf{i} - 10.0\mathbf{j}\}$ in., we have

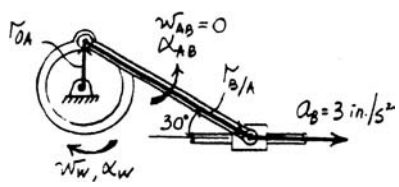

$$\mathbf{a}_B = \mathbf{a}_A + \alpha_{AB} \times \mathbf{r}_{B/A} - \omega_{AB}^2\,\mathbf{r}_{B/A}$$

$$3\mathbf{i} = 5\alpha_W\,\mathbf{i} - 7.20\mathbf{j} + \alpha_{AB}\,\mathbf{k} \times (17.32\mathbf{i} - 10.0\mathbf{j}) - \mathbf{0}$$

$$3\mathbf{i} = (10.0\alpha_{AB} + 5\alpha_W)\,\mathbf{i} + (17.32\alpha_{AB} - 7.20)\,\mathbf{j}$$

Equating **i** and **j** components, we have

$$3 = 10.0\alpha_{AB} + 5\alpha_W \qquad \textbf{[1]}$$

$$0 = 17.32\alpha_{AB} - 7.20 \qquad \textbf{[2]}$$

Solving Eqs.[1] and [2] yields

$$\alpha_{AB} = 0.4157\ \text{rad/s}^2$$

$$\alpha_W = -0.2314\ \text{rad/s}^2 = 0.231\ \text{rad/s}^2 \quad \circlearrowleft \qquad \textbf{Ans.}$$

© 2010 Pearson Education, Inc., Upper Saddle River, NJ. All rights reserved. This material is protected under all copyright laws as they currently exist. No portion of this material may be reproduced, in any form or by any means, without permission in writing from the publisher.

16–114. The ends of bar AB are confined to move along the paths shown. At a given instant, A has a velocity of 8 ft/s and an acceleration of 3 ft/s^2. Determine the angular velocity and angular acceleration of AB at this instant.

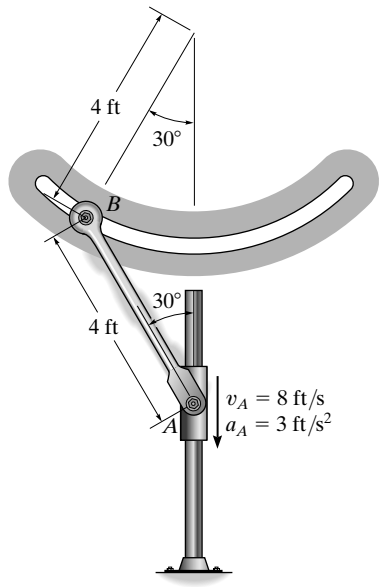

$$\omega = \frac{8}{4} = 2 \text{ rad/s} \quad \circlearrowright \qquad \textbf{Ans.}$$

$$v_B = 4(2) = 8 \text{ ft/s}$$

$$(a_B)_n = \frac{(8)^2}{4} = 16 \text{ ft/s}^2$$

$$\mathbf{a}_B = \mathbf{a}_A + \mathbf{a}_{B/A}$$

$$\begin{bmatrix} 16 \\ \nearrow_{30^\circ} \end{bmatrix} + \begin{bmatrix} (a_B)_t \\ \searrow_{30^\circ} \end{bmatrix} = \begin{bmatrix} 3 \\ \downarrow \end{bmatrix} + \begin{bmatrix} \alpha(4) \\ \nearrow_{60^\circ} \end{bmatrix} + \begin{bmatrix} (2)^2(4) \\ \searrow_{60^\circ} \end{bmatrix}$$

$(\overset{+}{\rightarrow})$ $\quad 16 \sin 30^\circ + (a_B)_t \cos 30^\circ = 0 + \alpha(4) \sin 60^\circ + 16 \cos 60^\circ$

$(+\uparrow)$ $\quad 16 \cos 30^\circ - (a_B)_t \sin 30^\circ = -3 + \alpha(4) \cos 60^\circ - 16 \sin 60^\circ$

$$\alpha = 7.68 \text{ rad/s}^2 \quad \circlearrowright \qquad \textbf{Ans.}$$

$$(a_B)_t = 30.7 \text{ ft/s}^2$$

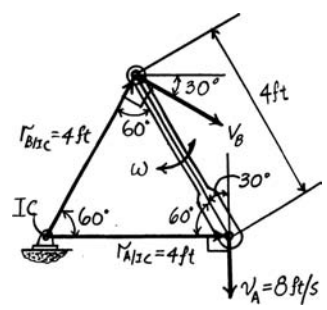

Also,

$$\mathbf{a}_B = \mathbf{a}_A + \alpha_{AB} \times \mathbf{r}_{B/A} - \omega^2 \mathbf{r}_{B/A}$$

$$(a_B)_t \cos 30^\circ \mathbf{i} - (a_B)_t \sin 30^\circ \mathbf{j} + \left(\frac{(8)^2}{4}\right) \sin 30^\circ \mathbf{i} + \left(\frac{(8)^2}{4}\right) \cos 30^\circ \mathbf{j} = -3\mathbf{j}$$

$$-(\alpha \mathbf{k}) \times (-4 \sin 30^\circ \mathbf{i} + 4 \cos 30^\circ \mathbf{j}) - (2)^2(-4 \sin 30^\circ \mathbf{i} + 4 \cos 30^\circ \mathbf{j})$$

$(\overset{+}{\rightarrow})$ $\quad (a_B)_t \cos 30^\circ + 8 = -3.464\alpha + 8$

$(+\uparrow)$ $\quad -(a_B)_t \sin 30^\circ + 13.8564 = -3 + 2\alpha - 13.8564$

$$\alpha = 7.68 \text{ rad/s}^2 \quad \circlearrowright \qquad \textbf{Ans.}$$

$$(a_B)_t = 30.7 \text{ ft/s}^2$$

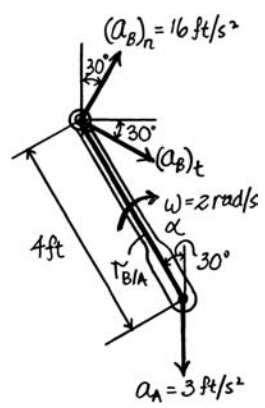

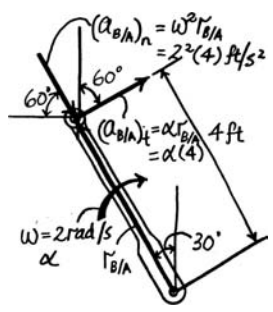

© 2010 Pearson Education, Inc., Upper Saddle River, NJ. All rights reserved. This material is protected under all copyright laws as they currently exist. No portion of this material may be reproduced, in any form or by any means, without permission in writing from the publisher.

16–115. Rod AB has the angular motion shown. Determine the acceleration of the collar C at this instant.

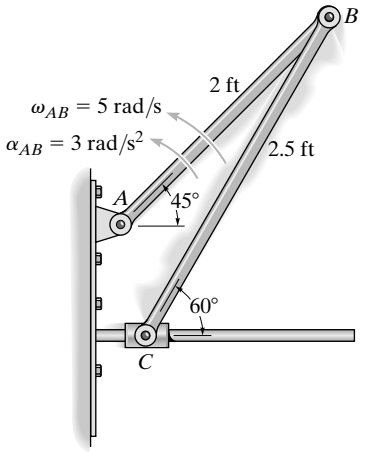

$$\frac{r_{B/IC}}{\sin 30°} = \frac{2.5}{\sin 135°}$$

$$r_{B/IC} = 1.7678 \text{ ft}$$

$$\omega = \frac{10}{1.7678} = 5.66 \text{ rad/s} \quad \circlearrowleft$$

$$(a_B)_n = 25(2) = 50 \text{ ft/s}^2$$

$$\mathbf{a}_C = \mathbf{a}_B + \mathbf{a}_{C/B}$$

$$\begin{bmatrix} a_C \\ \rightarrow \end{bmatrix} = \begin{bmatrix} 6 \\ 45° \nwarrow \end{bmatrix} + \begin{bmatrix} 50 \\ 45° \swarrow \end{bmatrix} + \begin{bmatrix} (5.66)^2(2.5) \\ \nearrow 60° \end{bmatrix} + \begin{bmatrix} \alpha(2.5) \\ \searrow 30° \end{bmatrix}$$

$(\overset{+}{\rightarrow})$ $\quad a_C = -6\cos 45° - 50\cos 45° + 80\cos 60° + \alpha(2.5)\cos 30°$

$(+\uparrow)$ $\quad 0 = 6\sin 45° - 50\sin 45° + 80\sin 60° - \alpha(2.5)\sin 30°$

$$\alpha = 30.5 \text{ rad/s}^2 \quad \circlearrowleft$$

$$a_C = 66.5 \text{ ft/s}^2 \rightarrow \qquad \textbf{Ans.}$$

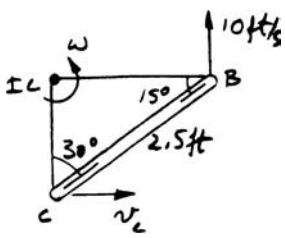

Also,

$$v_B = 5(2) = 10 \text{ ft/s}$$

$$\mathbf{v}_C = \mathbf{v}_B + \mathbf{v}_{C/B}$$

$$-v_C\,\mathbf{i} = -10\cos 45°\mathbf{i} + 10\sin 45°\mathbf{j} + \omega\mathbf{k} \times (-2.5\sin 30°\mathbf{i} - 2.5\cos 30°\mathbf{j})$$

$(+\uparrow)$ $\quad 0 = 10\sin 45° - 2.5\,\omega\sin 30°$

$$\omega = 5.66 \text{ rad/s}$$

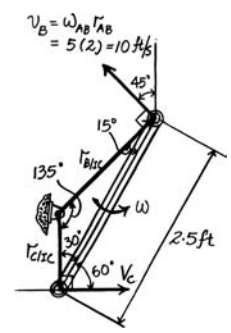

$$\mathbf{a}_C = \mathbf{a}_B + \alpha \times \mathbf{r}_{C/B} - \omega^2\mathbf{r}_{C/B}$$

$$a_C\,\mathbf{i} = -\frac{(10)^2}{2}\cos 45°\mathbf{i} - \frac{(10)^2}{2}\sin 45°\mathbf{j} - 6\cos 45°\mathbf{i} + 6\sin 45°\mathbf{j}$$

$$+ (\alpha\mathbf{k}) \times (-2.5\cos 60°\mathbf{i} - 2.5\sin 60°\mathbf{j}) - (5.66)^2(-2.5\cos 60°\mathbf{i} - 2.5\sin 60°\mathbf{j})$$

$(\overset{+}{\rightarrow})$ $\quad a_C = -35.355 - 4.243 + 2.165\alpha + 40$

$(+\uparrow)$ $\quad 0 - -35.355 + 4.243 - 1.25\alpha + 69.282$

$$\alpha = 30.5 \text{ rad/s}^2 \quad \circlearrowleft$$

$$a_C = 66.5 \text{ ft/s}^2 \rightarrow \qquad \textbf{Ans.}$$

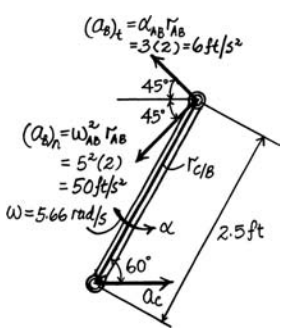

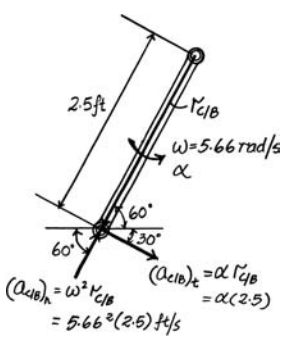

© 2010 Pearson Education, Inc., Upper Saddle River, NJ. All rights reserved. This material is protected under all copyright laws as they currently exist. No portion of this material may be reproduced, in any form or by any means, without permission in writing from the publisher.

***16–116.** At the given instant member AB has the angular motions shown. Determine the velocity and acceleration of the slider block C at this instant.

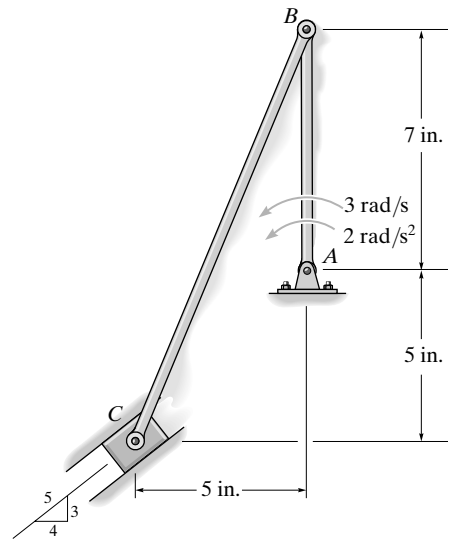

$v_B = 3(7) = 21 \text{ in./s} \leftarrow$

$\mathbf{v}_C = \mathbf{v}_B + \omega \times \mathbf{r}_{C/B}$

$-v_C\left(\frac{4}{5}\right)\mathbf{i} - v_C\left(\frac{3}{5}\right)\mathbf{j} = -21\mathbf{i} + \omega\mathbf{k} \times (-5\mathbf{i} - 12\mathbf{j})$

$(\overset{+}{\rightarrow}) \qquad -0.8v_C = -21 + 12\omega$

$(+\uparrow) \qquad -0.6v_C = -5\omega$

Solving:

$\omega = 1.125 \text{ rad/s}$

$v_C = 9.375 \text{ in./s} = 9.38 \text{ in./s}$ **Ans.**

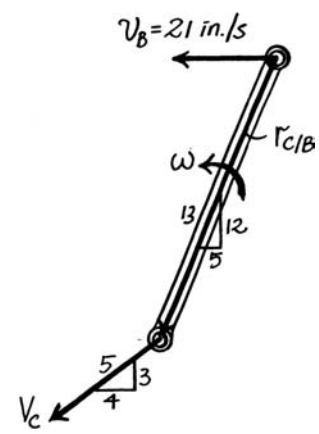

$(a_B)_n = (3)^2(7) = 63 \text{ in./s}^2 \downarrow$

$(a_B)_t = (2)(7) = 14 \text{ in./s}^2 \leftarrow$

$\mathbf{a}_C = a_B + \alpha \times \mathbf{r}_{C/B} - \omega^2\,\mathbf{r}_{C/B}$

$-a_C\left(\frac{4}{5}\right)\mathbf{i} - a_C\left(\frac{3}{5}\right)\mathbf{j} = -14\mathbf{i} - 63\mathbf{j} + (\alpha\mathbf{k}) \times (-5\mathbf{i} - 12\mathbf{j}) - (1.125)^2(-5\mathbf{i} - 12\mathbf{j})$

$(\overset{+}{\rightarrow}) \qquad -0.8a_C = -14 + 12\alpha + 6.328$

$(+\uparrow) \qquad -0.6a_C = -63 - 5\alpha + 15.1875$

$a_C = 54.7 \text{ in./s}^2$ **Ans.**

$\alpha = -3.00 \text{ rad/s}^2$

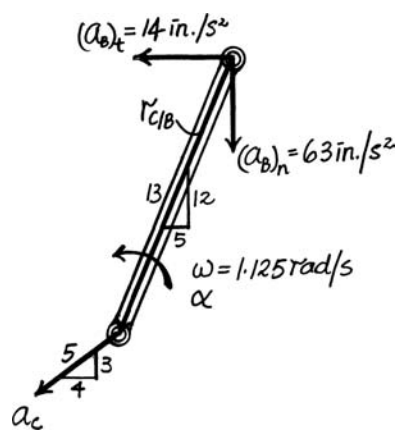

© 2010 Pearson Education, Inc., Upper Saddle River, NJ. All rights reserved. This material is protected under all copyright laws as they currently exist. No portion of this material may be reproduced, in any form or by any means, without permission in writing from the publisher.

•16–117. The hydraulic cylinder D extends with a velocity of $v_B = 4$ ft/s and an acceleration of $a_B = 1.5$ ft/s^2. Determine the acceleration of A at the instant shown.

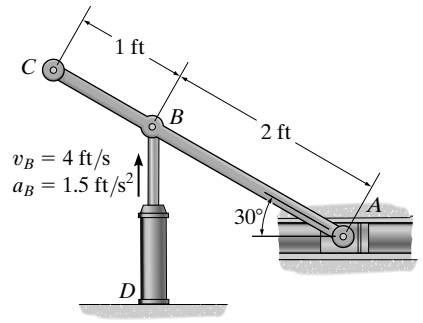

Angular Velocity: The location of the IC for rod AB is indicated in Fig. a. From the geometry of this figure,

$$r_{B/IC} = 2\cos 30° = 1.732 \text{ ft}$$

Thus,

$$\omega_{AB} = \frac{v_B}{r_{B/IC}} = \frac{4}{1.732} = 2.309 \text{ rad/s}$$

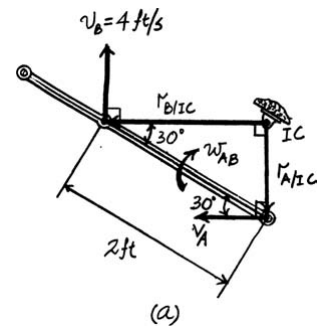

Acceleration and Angular Acceleration: Here, $\mathbf{r}_{A/B} = 2\cos 30°\mathbf{i} - 2\sin 30°\,\mathbf{j} = [1.732\mathbf{i} - 1\mathbf{j}]$ ft. Applying the relative acceleration equation and referring to Fig. b,

$$\mathbf{a}_A = \mathbf{a}_B + \alpha_{AB} \times \mathbf{r}_{A/B} - \omega_{AB}{}^2\mathbf{r}_{A/B}$$

$$-a_A\mathbf{i} = 1.5\mathbf{j} + (-\alpha_{AB}\mathbf{k})\times(1.732\mathbf{i} - 1\mathbf{j}) - 2.309^2(1.732\mathbf{i} - 1\mathbf{j})$$

$$-a_A\mathbf{i} = -(\alpha_{AB} + 9.238)\mathbf{i} + (6.833 - 1.732\alpha_{AB})\mathbf{j}$$

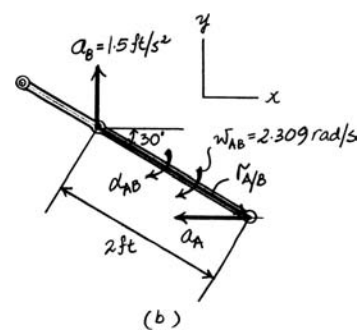

Equating the **i** and **j** components,

$$-a_A = -(\alpha_{AB} + 9.238) \qquad \textbf{(1)}$$

$$0 = 6.833 - 1.732\alpha_{AB} \qquad \textbf{(2)}$$

Solving Eqs. (1) and (2) yields

$$\alpha_{AB} = 3.945 \text{ rad/s}^2$$

$$a_A = 13.2 \text{ ft/s}^2 \leftarrow \qquad \textbf{Ans.}$$

© 2010 Pearson Education, Inc., Upper Saddle River, NJ. All rights reserved. This material is protected under all copyright laws as they currently exist. No portion of this material may be reproduced, in any form or by any means, without permission in writing from the publisher.

16–118. The hydraulic cylinder D extends with a velocity of $v_B = 4$ ft/s and an acceleration of $a_B = 1.5$ ft/s^2. Determine the acceleration of C at the instant shown.

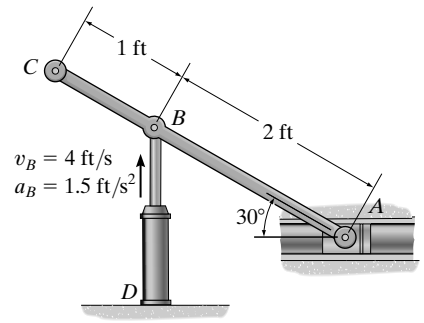

Angular Velocity: The location of the IC for rod AB is indicated in Fig. a. From the geometry of this figure, $r_{B/IC} = 2\cos 30° = 1.732$ ft

Thus,

$$\omega_{AB} = \frac{v_B}{r_{B/IC}} = \frac{4}{1.732} = 2.309 \text{ rad/s}$$

Acceleration and Angular Acceleration: Here, $\mathbf{r}_{A/B} = 2\cos 30°\,\mathbf{i} - 2\sin 30°\,\mathbf{j} = [1.732\mathbf{i} - 1\mathbf{j}]$ ft. Applying the relative acceleration equation to points A and B and referring to Fig. b,

$$\mathbf{a}_A = \mathbf{a}_B + \alpha_{AB} \times \mathbf{r}_{A/B} - \omega_{AB}{}^2\,\mathbf{r}_{A/B}$$

$$-a_A\mathbf{i} = 1.5\mathbf{j} + (-\alpha_{AB}\mathbf{k}) \times (1.732\mathbf{i} - 1\mathbf{j}) - 2.309^2(1.732\mathbf{i} - 1\mathbf{j})$$

$$-a_A\mathbf{i} = -(\alpha_{AB} + 9.2376)\mathbf{i} + (6.833 - 1.732\alpha_{AB})\mathbf{j}$$

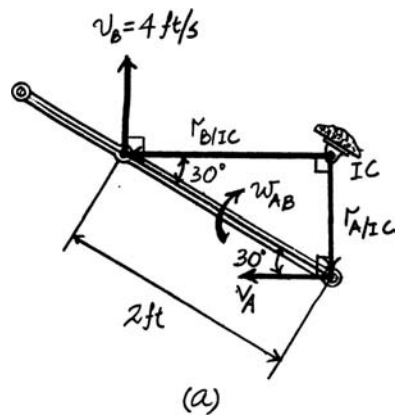

Equating the **i** and **j** components, we obtain

$$0 = 6.833 - 1.732\alpha_{AB} \qquad \alpha_{AB} = 3.945 \text{ rad/s}^2$$

Using this result and $\mathbf{r}_{C/B} = -1\cos 30°\,\mathbf{i} + 1\sin 30°\mathbf{j} = [-0.8660\mathbf{i} + 0.5\mathbf{j}]$ ft, the relative acceleration equation is applied at points B and C, Fig. b, which gives

$$\mathbf{a}_C = \mathbf{a}_B + \alpha_{AB} \times \mathbf{r}_{C/B} - \omega_{AB}{}^2\,\mathbf{r}_{C/B}$$

$$(a_C)_x\,\mathbf{i} + (a_C)_y\mathbf{j} = 1.5\mathbf{j} + (-3.945\mathbf{k}) \times (-0.8660\mathbf{i} + 0.5\mathbf{j}) - (2.309)^2(-0.8660\mathbf{i} + 0.5\mathbf{j})$$

$$(a_C)_x\,\mathbf{i} + (a_C)_y\,\mathbf{j} = 6.591\mathbf{i} + 2.25\mathbf{j}$$

Equating the **i** and **j** components,

$$(a_C)_x = 6.591 \text{ ft/s}^2 \rightarrow \qquad (a_C)_y = 2.25 \text{ ft/s}^2 \uparrow$$

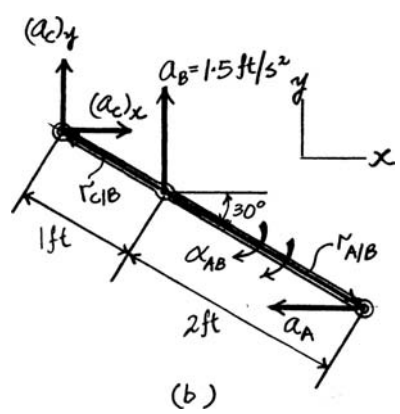

Thus, the magnitude of a_C is

$$a_C = \sqrt{(a_C)_x{}^2 + (a_C)_y{}^2} = \sqrt{6.591^2 + 2.25^2} = 6.96 \text{ ft/s}^2 \qquad \textbf{Ans.}$$

and its direction is

$$\theta = \tan^{-1}\left[\frac{(a_C)_y}{(a_C)_x}\right] = \tan^{-1}\left(\frac{2.25}{6.591}\right) = 18.8° \measuredangle \qquad \textbf{Ans.}$$

© 2010 Pearson Education, Inc., Upper Saddle River, NJ. All rights reserved. This material is protected under all copyright laws as they currently exist. No portion of this material may be reproduced, in any form or by any means, without permission in writing from the publisher.

16–119. The slider block moves with a velocity of $v_B = 5$ ft/s and an acceleration of $a_B = 3$ ft/s^2. Determine the angular acceleration of rod AB at the instant shown.

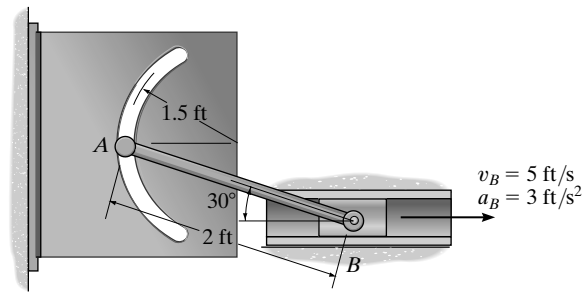

Angular Velocity: The velocity of point A is directed along the tangent of the circular slot. Thus, the location of the IC for rod AB is indicated in Fig. a. From the geometry of this figure,

$$r_{B/IC} = 2 \sin 30° = 1 \text{ ft} \qquad r_{A/IC} = 2 \cos 30° = 1.732 \text{ ft}$$

Thus,

$$\omega_{AB} = \frac{v_B}{r_{B/IC}} = \frac{5}{1} = 5 \text{ rad/s}$$

Then

$$v_A = \omega_{AB}\, r_{A/IC} = 5(1.732) = 8.660 \text{ ft/s}$$

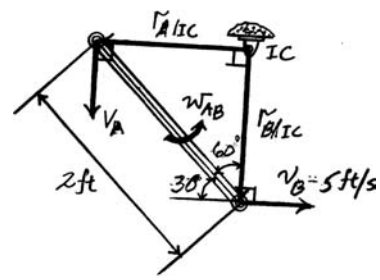

(a)

Acceleration and Angular Acceleration: Since point A travels along the circular slot, the normal component of its acceleration has a magnitude of $(a_A)_n = \frac{{v_A}^2}{\rho} = \frac{8.660^2}{1.5} = 50$ ft/s^2 and is directed towards the center of the circular slot. The tangential component is directed along the tangent of the slot. Applying the relative acceleration equation and referring to Fig. b,

$$\mathbf{a}_A = \mathbf{a}_B + \alpha_{AB} \times \mathbf{r}_{A/B} - {\omega_{AB}}^2\, \mathbf{r}_{A/B}$$

$$50\mathbf{i} - (a_A)_t\, \mathbf{j} = 3\mathbf{i} + (\alpha_{AB}\, \mathbf{k}) \times (-2 \cos 30°\mathbf{i} + 2 \sin 30°\mathbf{j}) - 5^2(-2 \cos 30°\, \mathbf{i} + 2 \sin 30°\mathbf{j})$$

$$50\mathbf{i} - (a_A)_t\, \mathbf{j} = (46.30 - \alpha_{AB})\mathbf{i} + (1.732\alpha_{AB} + 25)\mathbf{j}$$

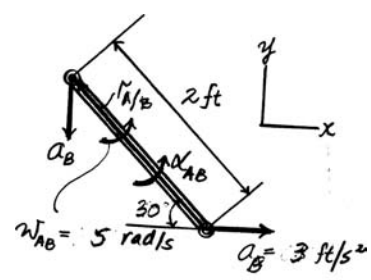

(b)

Equating the **i** components,

$$50 = 46.30 - \alpha_{AB}$$

$$\alpha_{AB} = -3.70 \text{ rad/s}^2 = 3.70 \text{ rad/s}^2 \circlearrowright \qquad \textbf{Ans.}$$

© 2010 Pearson Education, Inc., Upper Saddle River, NJ. All rights reserved. This material is protected under all copyright laws as they currently exist. No portion of this material may be reproduced, in any form or by any means, without permission in writing from the publisher.

***16–120.** The slider block moves with a velocity of $v_B = 5$ ft/s and an acceleration of $a_B = 3$ ft/s^2. Determine the acceleration of A at the instant shown.

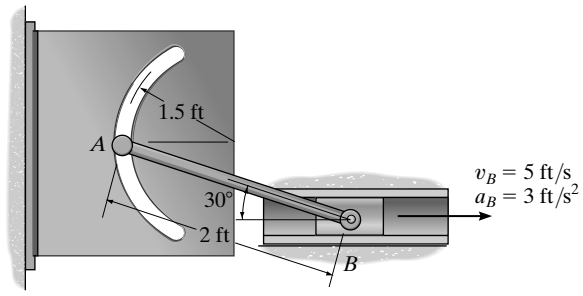

Angualr Velocity: The velocity of point A is directed along the tangent of the circular slot. Thus, the location of the IC for rod AB is indicated in Fig. a. From the geometry of this figure,

$$r_{B/IC} = 2 \sin 30° = 1 \text{ ft} \qquad\qquad r_{A/IC} = 2 \cos 30° = 1.732 \text{ ft}$$

Thus,

$$\omega_{AB} = \frac{v_B}{r_{B/IC}} = \frac{5}{1} = 5 \text{ rad/s}$$

Then

$$v_A = \omega_{AB}\, r_{A/IC} = 5(1.732) = 8.660 \text{ ft/s}$$

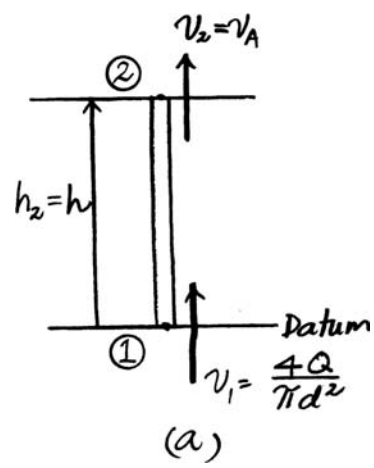

Acceleration and Angular Acceleration: Since point A travels along the circular slot, the normal component of its acceleration has a magnitude of $(a_A)_n = \frac{{v_A}^2}{\rho} = \frac{8.660^2}{1.5} = 50$ ft/s^2 and is directed towards the center of the circular slot. The tangential component is directed along the tangent of the slot. Applying the relative acceleration equation and referring to Fig. b,

$$\mathbf{a}_A = \mathbf{a}_B + \alpha_{AB} \times \mathbf{r}_{A/B} - \omega_{AB}{}^2\, \mathbf{r}_{A/B}$$

$$50\mathbf{i} - (a_A)_t\,\mathbf{j} = 3\mathbf{i} + (\alpha_{AB}\,\mathbf{k}) \times (-2\cos 30°\mathbf{i} + 2 \sin 30°\mathbf{j}) - 5^2(-2 \cos 30°\mathbf{i} + 2 \sin 30°\mathbf{j})$$

$$50\mathbf{i} - (a_A)_t\,\mathbf{j} = (46.30 - \alpha_{AB})\mathbf{i} - (1.732\alpha_{AB} + 25)\mathbf{j}$$

Equating the **i** and **j** components,

$$50 = 46.30 - \alpha_{AB}$$

$$-(a_A)_t = -(1.732\alpha_{AB} + 25)$$

Solving,

$$\alpha_{AB} = -3.70 \text{ rad/s}^2$$

$$(a_A)_t = 18.59 \text{ ft/s}^2 \downarrow$$

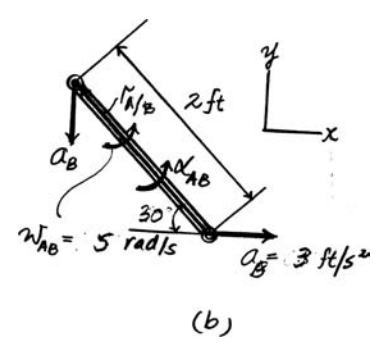

Thus, the magnitude of $\mathbf{a}_A$ is

$$a_A = \sqrt{(a_A)_t{}^2 + (a_A)_n{}^2} = \sqrt{18.59^2 + 50^2} = 53.3 \text{ ft/s}^2 \qquad \textbf{Ans.}$$

and its direction is

$$\theta = \tan^{-1}\left[\frac{(a_A)_t}{(a_A)_n}\right] = \tan^{-1}\left(\frac{18.59}{50}\right) = 20.4° \nwarrow \qquad \textbf{Ans.}$$

© 2010 Pearson Education, Inc., Upper Saddle River, NJ. All rights reserved. This material is protected under all copyright laws as they currently exist. No portion of this material may be reproduced, in any form or by any means, without permission in writing from the publisher.

•16–121. Crank AB rotates with an angular velocity of $\omega_{AB} = 6\,\text{rad/s}$ and an angular acceleration of $\alpha_{AB} = 2\,\text{rad/s}^2$. Determine the acceleration of C and the angular acceleration of BC at the instant shown.

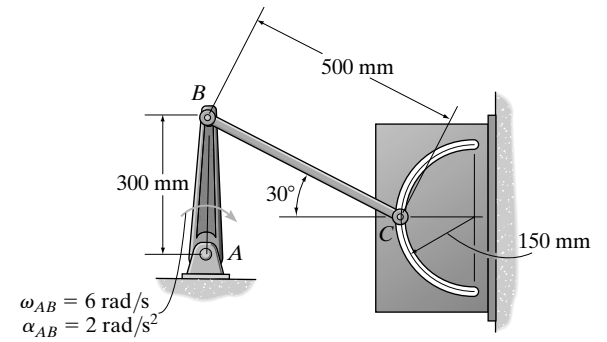

Angular Velocity: Since crank AB rotates about a fixed axis, then

$$v_B = \omega_{AB} r_B = 6(0.3) = 1.8\ \text{m/s} \rightarrow$$

The location of the IC for rod BC is

$r_{B/IC} = 0.5 \sin 30° = 0.25$ m $\qquad r_{C/IC} = 0.5 \cos 30° = 0.4330$ m

Then,

$$\omega_{BC} = \frac{v_B}{r_{B/IC}} = \frac{1.8}{0.25} = 7.2\ \text{rad/s}$$

and

$$v_C = \omega_{BC} r_{C/IC} = 7.2(0.4330) = 3.118\ \text{ft/s}$$

Acceleration and Angular Acceleration: Since crank AB rotates about a fixed axis, then

$$\begin{aligned}\mathbf{a}_B &= \alpha'_{AB} \times \mathbf{r}_B - \omega_{AB}{}^2 \mathbf{r}_B \\ &= (-2\mathbf{k}) \times (0.3\mathbf{j}) - 6^2(0.3\mathbf{j}) \\ &= \{0.6\mathbf{i} - 10.8\mathbf{j}\}\ \text{m/s}^2\end{aligned}$$

Since point C travels along a circular slot, the normal component of its acceleration has a magnitude of $(a_C)_n = \dfrac{v_C{}^2}{\rho} = \dfrac{3.118^2}{0.15} = 64.8\ \text{m/s}^2$ and is directed towards the center of the circular slot. The tangential component is directed along the tangent of the slot. Applying the relative acceleration equation,

$$\mathbf{a}_C = \mathbf{a}_B + \alpha_{BC} \times \mathbf{r}_{C/B} - \omega_{BC}{}^2 \mathbf{r}_{C/B}$$

$$64.8\mathbf{i} - (a_C)_t \mathbf{j} = (0.6\mathbf{i} - 10.8\mathbf{j}) + (\alpha_{BC}\mathbf{k}) \times (0.5 \cos 30°\mathbf{i} - 0.5 \sin 30°\,\mathbf{j}) - 7.2^2(0.5 \cos 30°\mathbf{i} - 0.5 \sin 30°\,\mathbf{j})$$

$$64.8\mathbf{i} - (a_C)_t \mathbf{j} = -(0.25\alpha_{BC} - 21.85)\mathbf{i} + (2.16 + 0.4330\alpha_{BC})\mathbf{j}$$

Equating the **i** and **j** components,

$$\begin{aligned}64.8 &= -(0.25\alpha_{BC} - 21.85) \\ -(a_C)_t &= 2.16 + 0.4330\alpha_{BC}\end{aligned}$$

Solving,

$$\alpha_{BC} = -346.59\ \text{rad/s}^2 = 347\text{rad/s}^2 \quad \circlearrowleft \qquad \textbf{Ans.}$$

$$(a_C)_t = -152.24\ \text{m/s}^2 = 152.24\ \text{m/s}^2 \uparrow$$

Thus, the magnitude of $\mathbf{a}_C$ is

$$a_C = \sqrt{(a_C)_t{}^2 + (a_C)_n{}^2} = \sqrt{152.24^2 + 64.7^2} = 165\text{m/s}^2 \qquad \textbf{Ans.}$$

and its direction is

$$\theta = \tan^{-1}\left[\frac{(a_C)_t}{(a_C)_n}\right] = \tan^{-1}\left(\frac{152.24}{64.8}\right) = 66.9° \measuredangle \qquad \textbf{Ans.}$$

© 2010 Pearson Education, Inc., Upper Saddle River, NJ. All rights reserved. This material is protected under all copyright laws as they currently exist. No portion of this material may be reproduced, in any form or by any means, without permission in writing from the publisher.

16–122. The hydraulic cylinder extends with a velocity of $v_A = 1.5$ m/s and an acceleration of $a_A = 0.5$ m/s^2. Determine the angular acceleration of link ABC and the acceleration of end C at the instant shown. Point B is pin connected to the slider block.

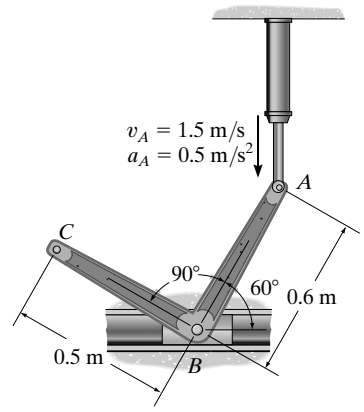

Angular Velocity: The location of the IC for link ABC is indicated in Fig. a. From the geometry of this figure,

$$r_{A/IC} = 0.6 \cos 60° = 0.3 \text{ m}$$

Then

$$\omega_{ABC} = \frac{v_A}{r_{A/IC}} = \frac{1.5}{0.3} = 5 \text{ rad/s}$$

Acceleration and Angular Acceleration: Applying the relative acceleration equation to points A and B,

$$\mathbf{a}_B = \mathbf{a}_A + \alpha_{ABC} \times \mathbf{r}_{B/A} - \omega_{ABC}{}^2 r_{B/A}$$

$$-a_B\,\mathbf{i} = -0.5\mathbf{j} + (-\alpha_{ABC}\mathbf{k}) \times (-0.6 \cos 60°\mathbf{i} - 0.6 \sin 60°\,\mathbf{j}) - 5^2(-0.6 \cos 60°\mathbf{i} - 0.6 \sin 60°\mathbf{j})$$

$$-a_B\,\mathbf{i} = (7.5 - 0.5196\alpha_{ABC})\mathbf{i} + (0.3\alpha_{ABC} + 12.490)\mathbf{j}$$

Equating the **i** and **j** components,

$$-a_B = 7.5 - 0.5196\alpha_{ABC} \qquad \textbf{(1)}$$

$$0 = 0.3\alpha_{ABC} + 12.490 \qquad \textbf{(2)}$$

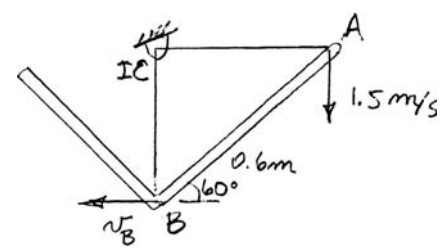

Solving Eqs. (1) and (2),

$$\alpha_{ABC} = -41.63 \text{ rad/s}^2 = 41.6 \text{ rad/s}^2 \qquad \textbf{Ans.}$$

$$a_B = -29.13 \text{ m/s}^2$$

From points B and C,

$$a_C = \mathbf{a}_B + \alpha_{ABC} \times \mathbf{r}_{C/B} - \omega_{ABC}{}^2 r_{C/B}$$

$$(a_C)_x\,\mathbf{i} + (a_C)_y\mathbf{j} = [-(-29.13)\mathbf{i}] + [-(-41.63)\mathbf{k}] \times (-0.5 \cos 30°\,\mathbf{i} + 0.5 \sin 30°\mathbf{j}) - 5^2(-0.5 \cos 30°\mathbf{i} + 0.5 \sin 30°\mathbf{j})$$

$$(a_C)_x\,\mathbf{i} + (a_C)_y\,\mathbf{j} = 29.55\mathbf{i} - 24.28\,\mathbf{j}$$

Equating the **i** and **j** components,

$$(a_C)_x = 29.55 \text{ m/s}^2 \qquad (a_C)_y = -24.28 \text{ m/s}^2 = 24.28 \text{ m/s}^2 \downarrow$$

Thus, the magnitude of $\mathbf{a}_C$ is

$$a_C = \sqrt{(a_C)_x{}^2 + (a_C)_y{}^2} = \sqrt{29.55^2 + 24.28^2} = 38.2 \text{ m/s}^2 \qquad \textbf{Ans.}$$

and its direction is

$$\theta = \tan^{-1}\left[\frac{(a_C)_y}{(a_C)_x}\right] = \tan^{-1}\left(\frac{24.28}{29.55}\right) = 39.4° \searrow \qquad \textbf{Ans.}$$

© 2010 Pearson Education, Inc., Upper Saddle River, NJ. All rights reserved. This material is protected under all copyright laws as they currently exist. No portion of this material may be reproduced, in any form or by any means, without permission in writing from the publisher.

16–123. Pulley A rotates with the angular velocity and angular acceleration shown. Determine the angular acceleration of pulley B at the instant shown.

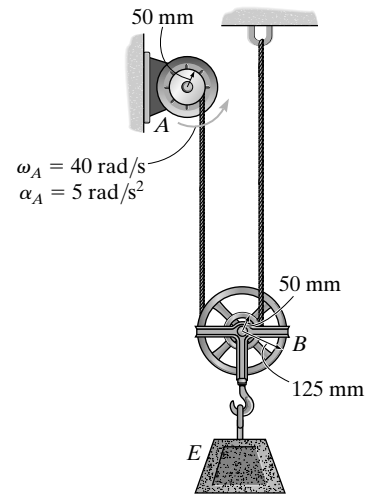

Angular Velocity: Since pulley A rotates about a fixed axis,

$$v_C = \omega_A r_A = 40(0.05) = 2 \text{ m/s} \uparrow$$

The location of the IC is indicated in Fig. a. Thus,

$$\omega_B = \frac{v_C}{r_{C/IC}} = \frac{2}{0.175} = 11.43 \text{ rad/s}$$

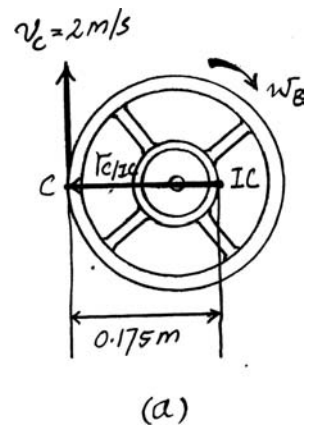

(a)

Acceleration and Angular Acceleration: For pulley A,

$$(a_C)_t = \alpha_A r_A = 5(0.05) = 0.25 \text{ m/s}^2 \uparrow$$

Using this result and applying the relative acceleration equation to points C and D by referring to Fig. b,

$$\mathbf{a}_D = \mathbf{a}_C + \alpha_B \times \mathbf{r}_{D/C} - \omega_B{}^2 r_{D/C}$$

$$(a_D)_n \mathbf{i} = (a_C)_n \mathbf{i} + 0.25\mathbf{j} + (-\alpha_B \mathbf{k}) \times (0.175\mathbf{i}) - 11.43^2(0.175\mathbf{i})$$

$$(a_D)_n \mathbf{i} = [(a_C)_n - 22.86]\mathbf{i} + (0.25 - 0.175\alpha_B)\mathbf{j}$$

Equating the **j** components,

$$0 = 0.25 - 0.175\alpha_B$$

$$\alpha_B = 1.43 \text{ rad/s}^2 \qquad \textbf{Ans.}$$

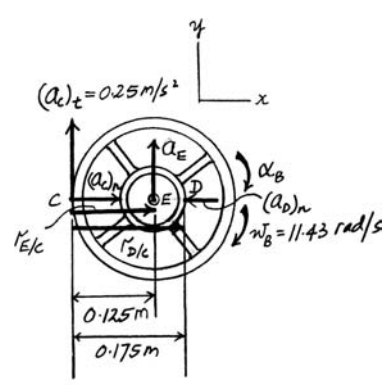

(b)

© 2010 Pearson Education, Inc., Upper Saddle River, NJ. All rights reserved. This material is protected under all copyright laws as they currently exist. No portion of this material may be reproduced, in any form or by any means, without permission in writing from the publisher.

***16–124.** Pulley A rotates with the angular velocity and angular acceleration shown. Determine the acceleration of block E at the instant shown.

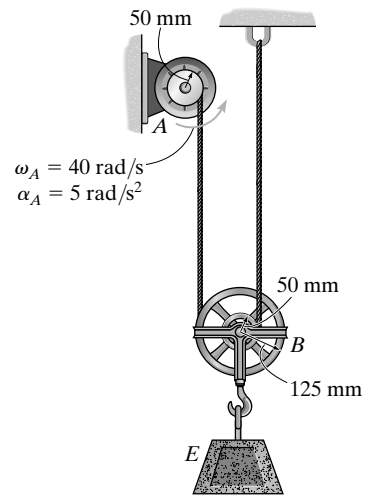

Angular Velocity: Since pulley A rotates about a fixed axis,

$$v_C = \omega_A r_A = 40(0.05) = 2 \text{ m/s} \uparrow$$

The location of the IC is indicated in Fig. a. Thus,

$$\omega_B = \frac{v_C}{r_{C/IC}} = \frac{2}{0.175} = 11.43 \text{ rad/s}$$

Acceleration and Angular Acceleration: For pulley A,

$$(a_C)_t = \alpha_A r_A = 5(0.05) = 0.25 \text{ m/s}^2 \uparrow$$

Using this result and applying the relative acceleration equation to points C and D by referring to Fig. b,

$$\mathbf{a}_D = \mathbf{a}_C + \alpha_B \times \mathbf{r}_{D/C} - \omega_B{}^2 r_{D/C}$$

$$(a_D)_n \mathbf{i} = (a_C)_n \mathbf{i} + 0.25\mathbf{j} + (-\alpha_B \mathbf{k}) \times (0.175\mathbf{i}) - 11.43^2(0.175\mathbf{i})$$

$$(a_D)_n \mathbf{i} = [(a_C)_n - 22.86]\mathbf{i} + (0.25 - 0.175\alpha_B)\mathbf{j}$$

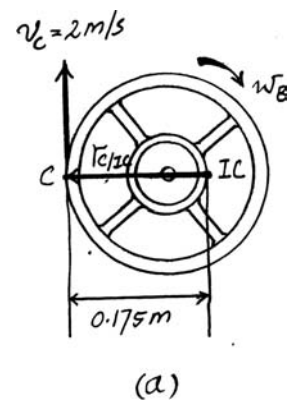

(a)

Equating the **j** components,

$$0 = 0.25 - 0.175\alpha_B$$

$$\alpha_B = 1.429 \text{ rad/s} = 1.43 \text{ rad/s}^2$$

Using this result, the relative acceleration equation applied to points C and E, Fig. b, gives

$$\mathbf{a}_E = \mathbf{a}_C + \alpha_B \times \mathbf{r}_{E/C} - \omega_B{}^2 r_{E/C}$$

$$a_E \mathbf{j} = [(a_C)_n \mathbf{i} + 0.25\mathbf{j}] + (-1.429\mathbf{k}) \times (0.125\mathbf{i}) - 11.43^2(0.125\mathbf{i})$$

$$a_E \mathbf{j} = [(a_C)_n - 16.33]\mathbf{i} + 0.0714\mathbf{j}$$

Equating the **j** components,

$$a_E = 0.0714 \text{ m/s}^2 \uparrow \qquad \textbf{Ans.}$$

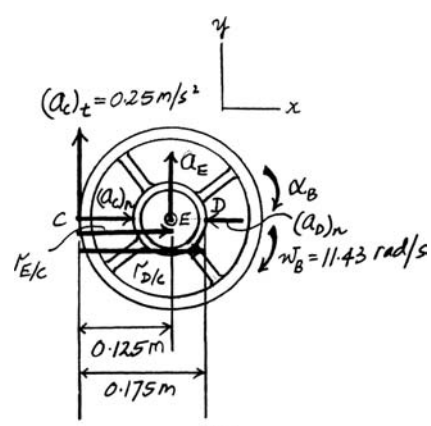

(b)

© 2010 Pearson Education, Inc., Upper Saddle River, NJ. All rights reserved. This material is protected under all copyright laws as they currently exist. No portion of this material may be reproduced, in any form or by any means, without permission in writing from the publisher.

•16–125. The hydraulic cylinder is extending with the velocity and acceleration shown. Determine the angular acceleration of crank AB and link BC at the instant shown.

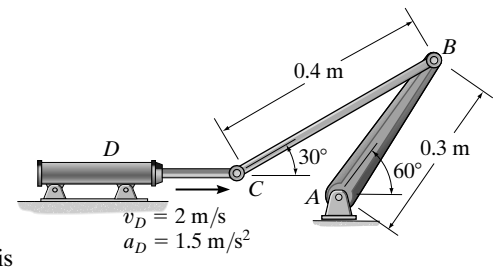

Angular Velocity: Crank AB rotates about a fixed axis. Thus,

$$v_B = \omega_{AB} r_B = \omega_{AB}(0.3)$$

The location of the IC for link BC is indicated in Fig. b. From the geometry of this figure,

$$r_{C/IC} = 0.4 \text{ m} \qquad r_{B/IC} = 2(0.4 \cos 30°) = 0.6928 \text{ m}$$

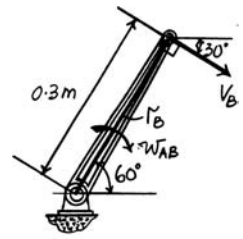

(a)

Then

$$\omega_{BC} = \frac{v_C}{r_{C/IC}} = \frac{2}{0.4} = 5 \text{ rad/s}$$

and

$$v_B = \omega_{BC} r_{B/IC}$$

$$\omega_{AB}(0.3) = 5(0.6928)$$

$$\omega_{AB} = 11.55 \text{ rad/s}$$

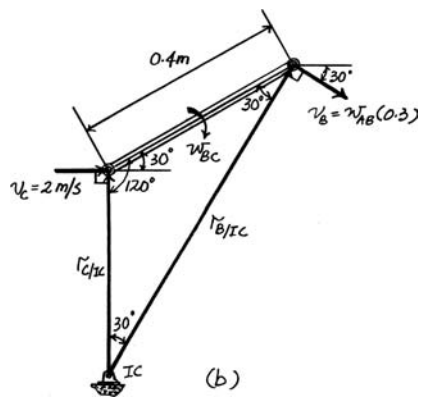

(b)

Acceleration and Angular Acceleration: Since crank AB rotates about a fixed axis, Fig. c,

$$\mathbf{a}_B = \alpha_{AB} \times \mathbf{r}_B - \omega_{AB}{}^2 \mathbf{r}_B$$

$$= (-\alpha_{AB}\mathbf{k}) \times (0.3 \cos 60°\mathbf{i} + 0.3 \sin 60°\mathbf{j}) - 11.55^2(0.3 \cos 60°\mathbf{i} + 0.3 \sin 60°\mathbf{j})$$

$$= (0.2598\alpha_{AB})\mathbf{i} - (0.15\alpha_{AB} + 34.64)\mathbf{j}$$

Using these results and applying the relative acceleration equation to points B and C of link BC, Fig. d,

$$\mathbf{a}_B = \mathbf{a}_C + \alpha_{BC} \times \mathbf{r}_{B/C} - \omega_{BC}{}^2 r_{B/C}$$

$$(0.2598\alpha_{AB} - 20)\mathbf{i} - (0.15\alpha_{AB} + 34.64)\mathbf{j} = 1.5\mathbf{i} + (\alpha_{BC}\mathbf{k}) \times (0.4 \cos 30°\mathbf{i} + 0.4 \sin 30°\mathbf{j}) - 5^2(0.4 \cos 30°\mathbf{i} + 0.4 \sin 30°\mathbf{j})$$

$$(0.2598\alpha_{AB} - 20)\mathbf{i} - (0.15\alpha_{AB} + 34.64)\mathbf{j} = -(0.2\alpha_{BC} + 7.160)\mathbf{i} + (0.3464\alpha_{BC} - 5)\mathbf{j}$$

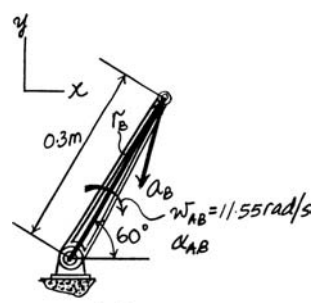

(c)

Equating the **i** and **j** components,

$$0.2598\alpha_{AB} - 20 = -(0.2\alpha_{BC} + 7.160)$$

$$-(0.15\alpha_{AB} + 34.64) = 0.3464\alpha_{BC} - 5$$

Solving,

$$\alpha_{BC} = -160.44 \text{ rad/s}^2 = 160 \text{ rad/s}^2 \qquad \textbf{Ans.}$$

$$\alpha_{AB} = 172.93 \text{ rad/s}^2 = 173 \text{ rad/s}^2 \qquad \textbf{Ans.}$$

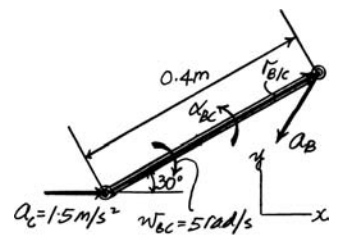

(d)

© 2010 Pearson Education, Inc., Upper Saddle River, NJ. All rights reserved. This material is protected under all copyright laws as they currently exist. No portion of this material may be reproduced, in any form or by any means, without permission in writing from the publisher.

16–126. A cord is wrapped around the inner spool of the gear. If it is pulled with a constant velocity **v**, determine the velocities and accelerations of points A and B. The gear rolls on the fixed gear rack.

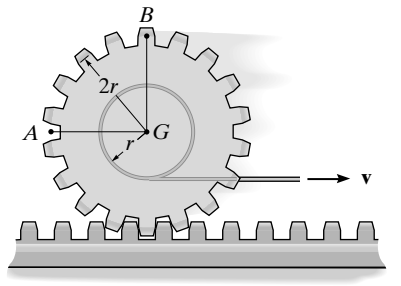

Velocity Analysis:

$$\omega = \frac{v}{r}$$

$$v_B = \omega r_{B/IC} = \frac{v}{r}(4r) = 4v \rightarrow \qquad \textbf{Ans.}$$

$$v_A = \omega r_{A/IC} = \frac{v}{r}\left(\sqrt{(2r)^2 + (2r)^2}\right) = 2\sqrt{2}v \quad \measuredangle 45° \qquad \textbf{Ans.}$$

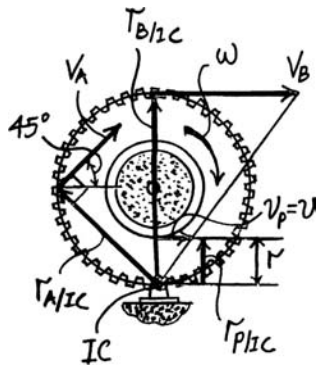

Acceleration Equation: From Example 16–3, Since $a_G = 0, \alpha = 0$

$$\mathbf{r}_{B/G} = 2\,r\,\mathbf{j} \qquad \mathbf{r}_{A/G} = -2r\,\mathbf{i}$$

$$\mathbf{a}_B = \mathbf{a}_G + \alpha \times \mathbf{r}_{B/G} - \omega^2\,\mathbf{r}_{B/G}$$

$$= \mathbf{0} + \mathbf{0} - \left(\frac{v}{r}\right)^2 (2r\mathbf{j}) = -\frac{2v^2}{r}\mathbf{j}$$

$$a_B = \frac{2\,v^2}{r} \downarrow \qquad \textbf{Ans.}$$

$$\mathbf{a}_A = \mathbf{a}_G + \alpha \times \mathbf{r}_{A/G} - \omega^2\,\mathbf{r}_{A/G}$$

$$= 0 + 0 - \left(\frac{v}{r}\right)^2 (-2r\mathbf{i}) = \frac{2v^2}{r}\mathbf{i}$$

$$a_A = \frac{2v^2}{r} \rightarrow \qquad \textbf{Ans.}$$

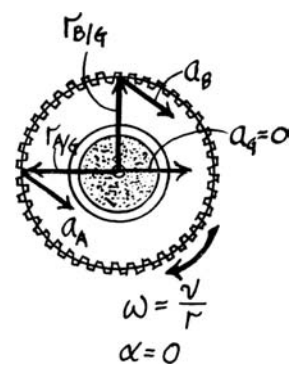

© 2010 Pearson Education, Inc., Upper Saddle River, NJ. All rights reserved. This material is protected under all copyright laws as they currently exist. No portion of this material may be reproduced, in any form or by any means, without permission in writing from the publisher.

16–127. At a given instant, the gear racks have the velocities and accelerations shown. Determine the acceleration of points A and B.

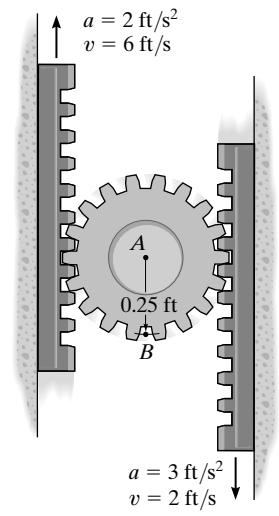

Velocity Analysis: The angular velocity of the gear can be obtained by using the method of instantaneous center of zero velocity. From similar triangles,

$$\omega = \frac{v_D}{r_{D/IC}} = \frac{v_C}{r_{C/IC}}$$

$$\frac{6}{r_{D/IC}} = \frac{2}{r_{C/IC}} \qquad \textbf{[1]}$$

Where

$$r_{D/IC} + r_{C/IC} = 0.5 \qquad \textbf{[2]}$$

Solving Eqs.[1] and [2] yields

$$r_{D/IC} = 0.375 \text{ ft} \qquad r_{C/IC} = 0.125 \text{ ft}$$

Thus,

$$\omega = \frac{v_D}{r_{D/IC}} = \frac{6}{0.375} = 16.0 \text{ rad/s}$$

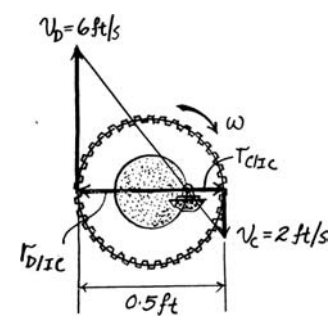

Acceleration Equation: The angular acceleration of the gear can be obtained by analyzing the angular motion point C and D. Applying Eq. 16–18 with $\mathbf{r}_{D/C} = \{-0.5\mathbf{i}\}$ ft, we have

$$\mathbf{a}_D = \mathbf{a}_C + \alpha \times \mathbf{r}_{D/C} - \omega^2\,\mathbf{r}_{D/C}$$

$$64.0\mathbf{i} + 2\mathbf{j} = -64.0\mathbf{i} - 3\mathbf{j} + (-\alpha\mathbf{k}) \times (-0.5\mathbf{i}) - 16.0^2\,(-0.5\mathbf{i})$$

$$64.0\mathbf{i} + 2\mathbf{j} = 64.0\mathbf{i} + (0.5\alpha - 3)\mathbf{j}$$

Equating **i** and **j** components, we have

$$64.0 = 64.0 \ (\textbf{\textit{Check!}})$$

$$2 = 0.5\,\alpha - 3 \qquad \alpha = 10.0 \text{ rad/s}^2$$

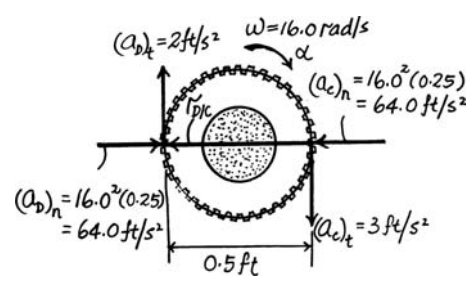

The acceleration of point A can be obtained by analyzing the angular motion point A and C. Applying Eq. 16–18 with $\mathbf{r}_{A/C} = \{-0.25\mathbf{i}\}$ ft, we have

$$\mathbf{a}_A = \mathbf{a}_C + \alpha \times \mathbf{r}_{A/C} - \omega^2\,\mathbf{r}_{A/C}$$

$$= -64.0\mathbf{i} - 3\mathbf{j} + (-10.0\mathbf{k}) \times (-0.25\mathbf{i}) - 16.0^2\,(-0.25\mathbf{i})$$

$$= \{0.500\mathbf{j}\} \text{ ft/s}^2$$

Thus,

$$a_A = 0.500 \text{ ft/s}^2 \downarrow \qquad \textbf{Ans.}$$

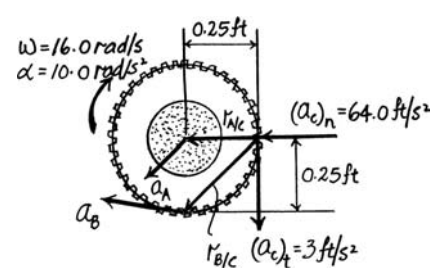

The acceleration of point B can be obtained by analyzing the angular motion point B and C. Applying Eq. 16–18 with $\mathbf{r}_{B/C} = \{-0.25\mathbf{i} - 0.25\mathbf{j}\}$ ft, we have

$$\mathbf{a}_B = \mathbf{a}_C + \alpha \times \mathbf{r}_{B/C} - \omega^2\mathbf{r}_{B/C}$$

$$= -64.0\mathbf{i} - 3\mathbf{j} + (-10.0\mathbf{k}) \times (-0.25\mathbf{i} - 0.25\mathbf{j}) - 16.0^2\,(-0.25\mathbf{i} - 0.25\mathbf{j})$$

$$= \{-2.50\mathbf{i} + 63.5\mathbf{j}\} \text{ ft/s}^2$$

The magnitude and direction of the acceleration of point B are given by

$$a_C = \sqrt{(-2.50)^2 + 63.5^2} = 63.5 \text{ ft/s}^2 \qquad \textbf{Ans.}$$

$$\theta = \tan^{-1}\frac{63.5}{2.50} = 87.7^\circ \ \nwarrow \qquad \textbf{Ans.}$$

© 2010 Pearson Education, Inc., Upper Saddle River, NJ. All rights reserved. This material is protected under all copyright laws as they currently exist. No portion of this material may be reproduced, in any form or by any means, without permission in writing from the publisher.

***16–128.** At a given instant, the gear has the angular motion shown. Determine the accelerations of points A and B on the link and the link's angular acceleration at this instant.

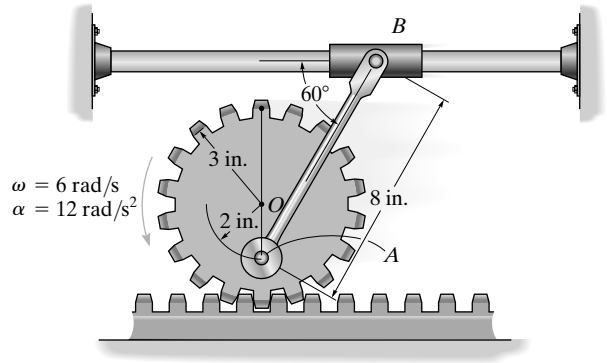

For the gear

$v_A = \omega r_{A/IC} = 6(1) = 6 \text{ in./s}$

$\mathbf{a}_O = -12(3)\mathbf{i} = \{-36\mathbf{i}\} \text{ in./s}^2 \qquad \mathbf{r}_{A/O} = \{-2\mathbf{j}\} \text{ in.} \qquad \alpha = \{12\mathbf{k}\} \text{ rad/s}^2$

$\mathbf{a}_A = \mathbf{a}_0 + \alpha \times \mathbf{r}_{A/O} - \omega^2 \mathbf{r}_{A/O}$

$= -36\mathbf{i} + (12\mathbf{k}) \times (-2\mathbf{j}) - (6)^2(-2\mathbf{j})$

$= \{-12\mathbf{i} + 72\mathbf{j}\} \text{ in./s}^2$

$a_A = \sqrt{(-12)^2 + 72^2} = 73.0 \text{ in./s}^2$ **Ans.**

$\theta = \tan^{-1}\left(\frac{72}{12}\right) = 80.5° \measuredangle$ **Ans.**

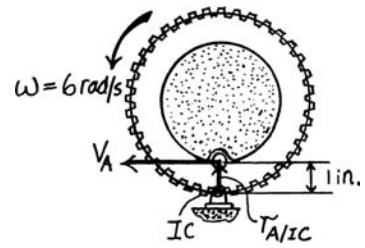

For link AB

The IC is at ∞, so $\omega_{AB} = 0$, i.e.,

$\omega_{AB} = \frac{v_A}{r_{A/IC}} = \frac{6}{\infty} = 0$

$\mathbf{a}_B = a_B\mathbf{i} \qquad \alpha_{AB} = -\alpha_{AB}\mathbf{k} \qquad \mathbf{r}_{B/A} = \{8\cos 60°\mathbf{i} + 8\sin 60°\mathbf{j}\} \text{ in.}$

$\mathbf{a}_B = \mathbf{a}_A + \alpha_{AB} \times \mathbf{r}_{B/A} - \omega^2 \mathbf{r}_{B/A}$

$a_B\mathbf{i} = (-12\mathbf{i} + 72\mathbf{j}) + (-\alpha_{AB}\mathbf{k}) \times (8\cos 60°\mathbf{i} + 8\sin 60°\mathbf{j}) - \mathbf{0}$

$(\overset{+}{\rightarrow}) \qquad a_B = -12 + 8\sin 60°(18) = 113 \text{ in./s}^2 \rightarrow$ **Ans.**

$(+\uparrow) \qquad 0 = 72 - 8\cos 60°\alpha_{AB} \qquad \alpha_{AB} = 18 \text{ rad/s}^2 \circlearrowright$ **Ans.**

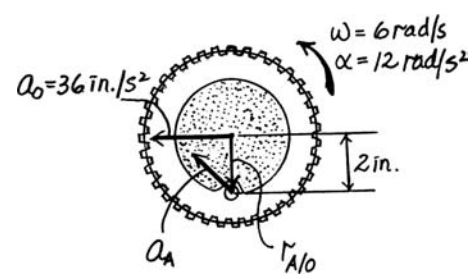

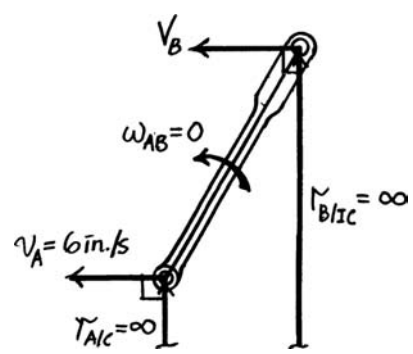

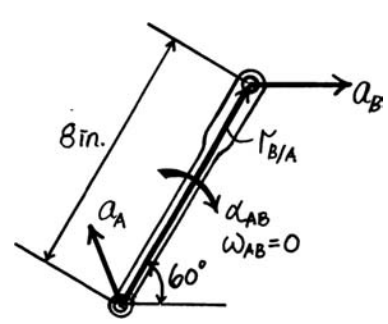

© 2010 Pearson Education, Inc., Upper Saddle River, NJ. All rights reserved. This material is protected under all copyright laws as they currently exist. No portion of this material may be reproduced, in any form or by any means, without permission in writing from the publisher.

•16–129. Determine the angular acceleration of link AB if link CD has the angular velocity and angular deceleration shown.

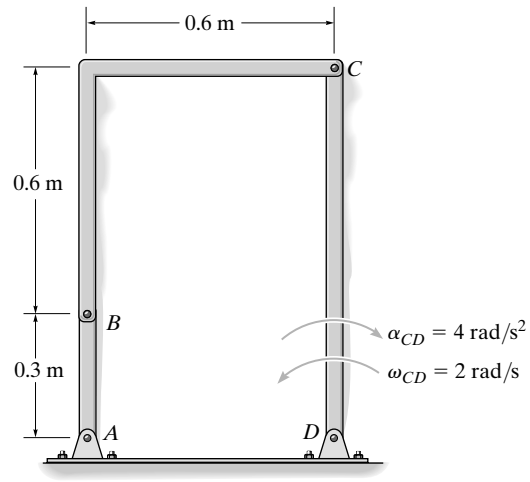

IC is at ∞, thus

$\omega_{BC} = 0$

$v_B = v_C = (0.9)(2) = 1.8$ m/s

$(a_C)_n = (2)^2(0.9) = 3.6$ m/s$^2 \downarrow$

$(a_C)_t = 4(0.9) = 3.6$ m/s$^2 \rightarrow$

$(a_B)_n = \dfrac{(1.8)^2}{0.3} = 10.8$ m/s$^2 \downarrow$

$\mathbf{a}_B = \mathbf{a}_C + \alpha_{BC} \times \mathbf{r}_{B/C} - \omega_{BC}^2\, \mathbf{r}_{B/C}$

$(a_B)_t\,\mathbf{i} - 10.8\mathbf{j} = 3.6\mathbf{i} - 3.6\mathbf{j} + (\alpha_{BC}\mathbf{k}) \times (-0.6\mathbf{i} - 0.6\mathbf{j}) - \mathbf{0}$

$(\overset{+}{\rightarrow})$ $\quad (a_B)_t = 3.6 + 0.6\,\alpha_{BC}$

$(+\uparrow)$ $\quad -10.8 = -3.6 - 0.6\,\alpha_{BC}$

$\alpha_{BC} = 12$ rad/s^2

$(a_B)_t = 10.8$ m/s^2

$\alpha_{AB} = \dfrac{10.8}{0.3} = 36$ rad/s^2 ↻ **Ans.**

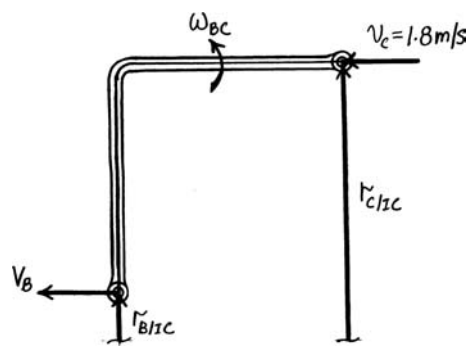

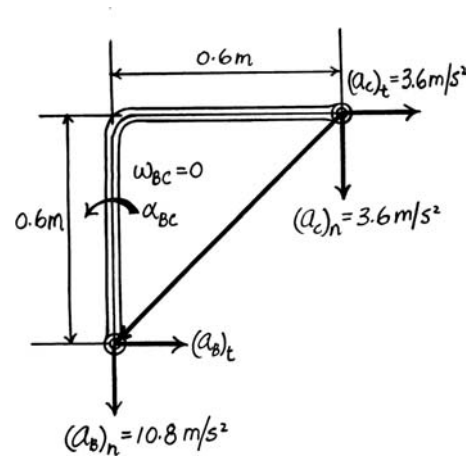

© 2010 Pearson Education, Inc., Upper Saddle River, NJ. All rights reserved. This material is protected under all copyright laws as they currently exist. No portion of this material may be reproduced, in any form or by any means, without permission in writing from the publisher.

16–130. Gear A is held fixed, and arm DE rotates clockwise with an angular velocity of $\omega_{DE} = 6$ rad/s and an angular acceleration of $\alpha_{DE} = 3$ rad/s^2. Determine the angular acceleration of gear B at the instant shown.

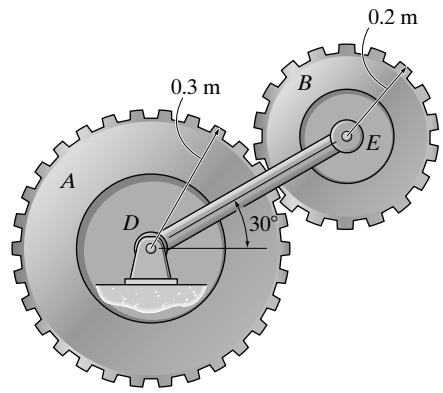

Angular Velocity: Arm DE rotates about a fixed axis, Fig. a. Thus,

$$v_E = \omega_{DE} r_E = 6(0.5) = 3 \text{ m/s}$$

The IC for gear B is located at the point where gears A and B are meshed, Fig. b. Thus,

$$\omega_B = \frac{v_E}{r_{E/IC}} = \frac{3}{0.2} = 15 \text{ rad/s}$$

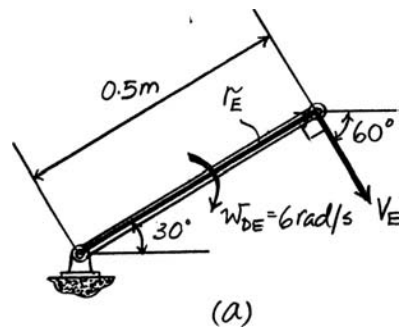

Acceleration and Angular Acceleration: Since arm DE rotates about a fixed axis, Fig. c,

$$\mathbf{a}_E = \alpha_{DE} \times \mathbf{r}_E - \omega_{DE}{}^2 \mathbf{r}_E$$

$$= (-3\mathbf{k}) \times (0.5 \cos 30°\mathbf{i} + 0.5 \sin 30°\,\mathbf{j}) - 6^2 (0.5 \cos 30°\,\mathbf{i} + 0.5 \sin 30°\,\mathbf{j})$$

$$= [-14.84\mathbf{i} - 10.30\mathbf{j}] \text{ m/s}^2$$

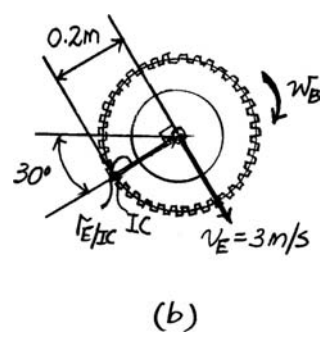

Using these results to apply the relative acceleration equation to points E and F of gear B, Fig. d, we have

$$\mathbf{a}_F = \mathbf{a}_E + \alpha_B \times \mathbf{r}_{F/E} - \omega_B{}^2 r_{F/E}$$

$$a_F \cos 30°\mathbf{i} + a_F \sin 30°\mathbf{j} = (-14.84\mathbf{i} - 10.30\mathbf{j}) + (-\alpha_B\,\mathbf{k}) \times$$

$$(-0.2 \cos 30°\,\mathbf{i} - 0.2 \sin 30°\mathbf{j}) - 15^2(-0.2 \cos 30°\mathbf{i} - 0.2 \sin 30°\mathbf{j})$$

$$a_F \cos 30°\,\mathbf{i} + a_F \sin 30°\mathbf{j} = (24.13 - 0.1\alpha_B)\mathbf{i} + (0.1732\alpha_B + 12.20)\mathbf{j}$$

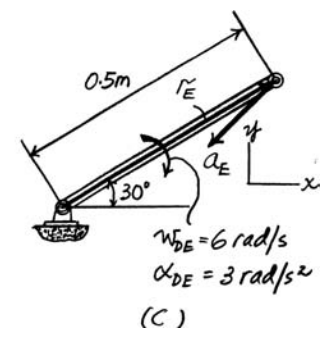

Equating the **i** and **j** components yields

$$0.8660a_F = 24.13 - 0.1\alpha_B$$

$$0.5a_F = 0.1732\alpha_B + 12.20$$

Solving,

$$a_F = 27 \text{ m/s}^2$$

$$\alpha_B = 7.5 \text{ rad/s}^2 \qquad \textbf{Ans.}$$

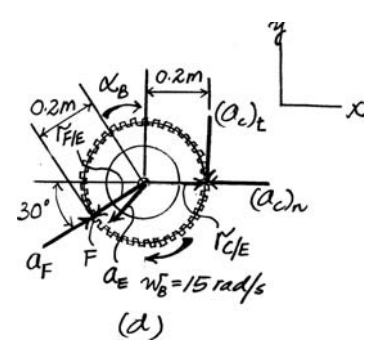

© 2010 Pearson Education, Inc., Upper Saddle River, NJ. All rights reserved. This material is protected under all copyright laws as they currently exist. No portion of this material may be reproduced, in any form or by any means, without permission in writing from the publisher.

16–131. Gear A rotates counterclockwise with a constant angular velocity of $\omega_A = 10$ rad/s, while arm DE rotates clockwise with an angular velocity of $\omega_{DE} = 6$ rad/s and an angular acceleration of $\alpha_{DE} = 3$ rad/s^2. Determine the angular acceleration of gear B at the instant shown.

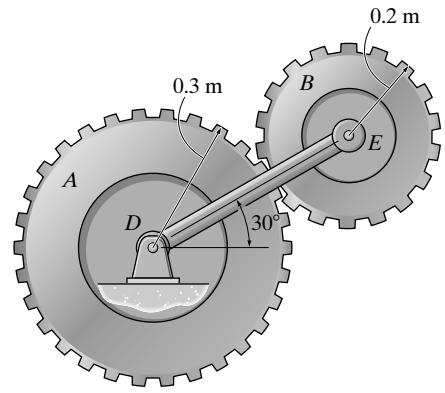

Angular Velocity: Arm DE and gear A rotate about a fixed axis, Figs. a and b. Thus,

$$v_E = \omega_{DE} r_E = 6(0.5) = 3 \text{ m/s}$$

$$v_F = \omega_A r_F = 10(0.3) = 3 \text{ m/s}$$

The location of the IC for gear B is indicated in Fig. c. Thus,

$$r_{E/IC} = r_{F/IC} = 0.1 \text{ m}$$

Then,

$$\omega_B = \frac{v_E}{r_{E/IC}} = \frac{3}{0.1} = 30 \text{ rad/s}$$

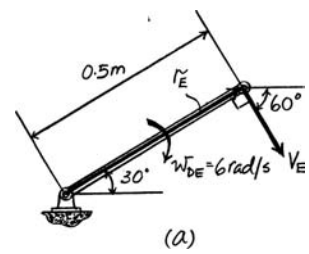

(a)

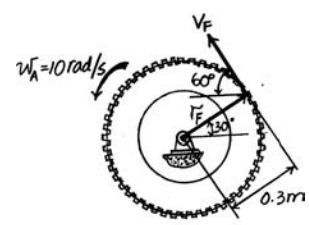

(b)

Acceleration and Angular Acceleration: Since arm DE rotates about a fixed axis, Fig. c, then

$$\mathbf{a}_E = \alpha_{DE} \times \mathbf{r}_E - \omega_{DE}{}^2 \mathbf{r}_E$$

$$= (-3\mathbf{k}) \times (0.5 \cos 30°\mathbf{i} + 0.5 \sin 30°\,\mathbf{j}) - 6^2 (0.5 \cos 30°\,\mathbf{i} + 0.5 \sin 30°\,\mathbf{j})$$

$$= [-14.84\mathbf{i} - 10.30\mathbf{j}] \text{ m/s}^2$$

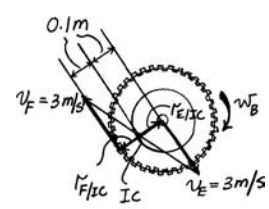

(c)

Using these results and applying the acceleration equation to points E and F of gear B, Fig. e,

$$\mathbf{a}_F = \mathbf{a}_E + \alpha_B \times \mathbf{r}_{F/E} - \omega_B{}^2 \mathbf{r}_{F/E}$$

$$a_F \cos 30°\mathbf{i} + a_F \sin 30°\mathbf{j} = (-14.84\mathbf{i} - 10.30\mathbf{j}) + (-\alpha_B\,\mathbf{k}) \times$$

$$(-0.2 \cos 30°\,\mathbf{i} - 0.2 \sin 30°\mathbf{j}) - 30^2(-0.2 \cos 30°\mathbf{i} - 0.2 \sin 30°\mathbf{j})$$

$$0.8660 a_F\,\mathbf{i} + 0.5 a_F\,\mathbf{j} = (141.05 - 0.1\alpha_B)\mathbf{i} + (79.70 + 0.1732\alpha_B)\mathbf{j}$$

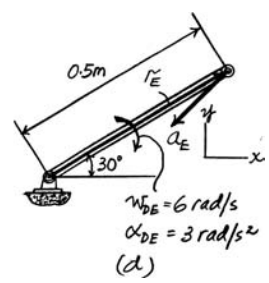

(d)

Equating the **i** and **j** components yields

$$0.8660 a_F = 141.05 - 0.1\alpha_B$$

$$0.5 a_F = 79.70 + 0.1732\alpha_B$$

$$a_F = 162 \text{ m/s}^2$$

$$\alpha_B = 7.5 \text{ rad/s}^2 \qquad \textbf{Ans.}$$

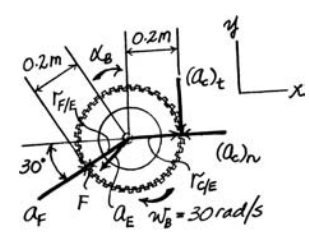

(e)

© 2010 Pearson Education, Inc., Upper Saddle River, NJ. All rights reserved. This material is protected under all copyright laws as they currently exist. No portion of this material may be reproduced, in any form or by any means, without permission in writing from the publisher.

***16–132.** If end A of the rod moves with a constant velocity of $v_A = 6$ m/s, determine the angular velocity and angular acceleration of the rod and the acceleration of end B at the instant shown.

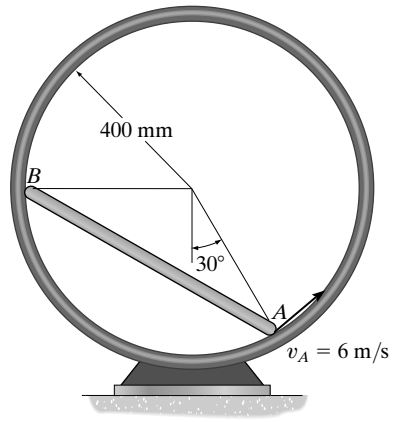

Angular Velocity: The location of the IC is indicated in Fig. a. Thus,

$$r_{A/IC} = r_{B/IC} = 0.4 \text{ m}$$

Then,

$$\omega_{AB} = \frac{v_A}{r_{A/IC}} = \frac{6}{0.4} = 15 \text{ rad/s}$$

and

$$v_B = \omega_{AB}\, r_{B/IC} = 15(0.4) = 6 \text{ m/s}$$

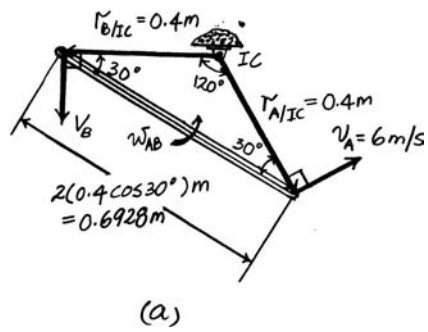

(a)

Acceleration and Angular Acceleration: The magnitude of the normal component of its acceleration of points A and B are $(a_A)_n = \frac{{v_A}^2}{\rho} = \frac{6^2}{0.4} = 90 \text{ m/s}^2$ and $(a_B)_n = \frac{{v_B}^2}{\rho} = \frac{6^2}{0.4} = 90 \text{ m/s}^2$ and both are directed towards the center of the circular track. Since $\mathbf{v}_A$ is constant, $(a_A)_t = 0$. Thus, $a_A = 90 \text{ m/s}^2$. Applying the relative acceleration equation to points A and B, Fig. b,

$$\mathbf{a}_B = \mathbf{a}_A + \alpha_{AB} \times \mathbf{r}_{B/A} - {\omega_{AB}}^2 \mathbf{r}_{B/A}$$

$$90\mathbf{i} - (a_B)_t\,\mathbf{j} = (-90\cos 60°\mathbf{i} + 90\sin 60°\mathbf{j}) + (\alpha_{AB}\,\mathbf{k}) \times$$
$$(-0.6928\cos 30°\mathbf{i} + 0.6928\sin 30°\mathbf{j}) - 15^2(-0.6928\cos 30°\mathbf{i} + 0.6928\sin 30°\mathbf{j})$$

$$90\mathbf{i} - (a_B)_t\,\mathbf{j} = (-0.3464\alpha_{AB} + 90)\mathbf{i} - (0.6\alpha_{AB})\mathbf{j}$$

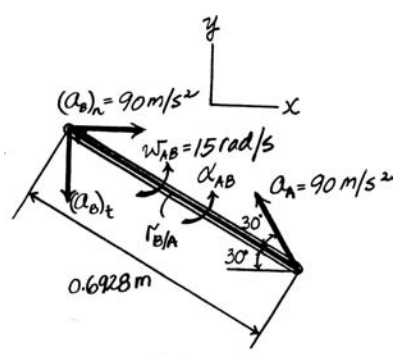

(b)

Equating the **i** and **j** components yields

$$90 = -0.3464\alpha_{AB} + 90$$

$$-(a_B) = -0.6\alpha_{AB}$$

$$\alpha_{AB} = 0 \text{ rad/s}^2 \qquad \textbf{Ans.}$$

$$(a_B)_t = 0 \text{ m/s}^2$$

Thus, the magnitude of $\mathbf{a}_B$ is

$$a_B = \sqrt{{(a_B)_t}^2 + {(a_B)_n}^2} = \sqrt{0^2 + 90^2} = 90 \text{ m/s}^2 \qquad \textbf{Ans.}$$

and its direction is

$$\theta = \tan^{-1}\left[\frac{(a_B)_t}{(a_B)_n}\right] = \tan^{-1}\left(\frac{0}{90}\right) = 0° \;\rightarrow \qquad \textbf{Ans.}$$

© 2010 Pearson Education, Inc., Upper Saddle River, NJ. All rights reserved. This material is protected under all copyright laws as they currently exist. No portion of this material may be reproduced, in any form or by any means, without permission in writing from the publisher.

•16–133. The retractable wing-tip float is used on an airplane able to land on water. Determine the angular accelerations α_{CD}, α_{BD}, and α_{AB} at the instant shown if the trunnion C travels along the horizontal rotating screw with an acceleration of $a_C = 0.5\ \text{ft/s}^2$. In the position shown, $v_C = 0$. Also, points A and E are pin connected to the wing and points A and C are coincident at the instant shown.

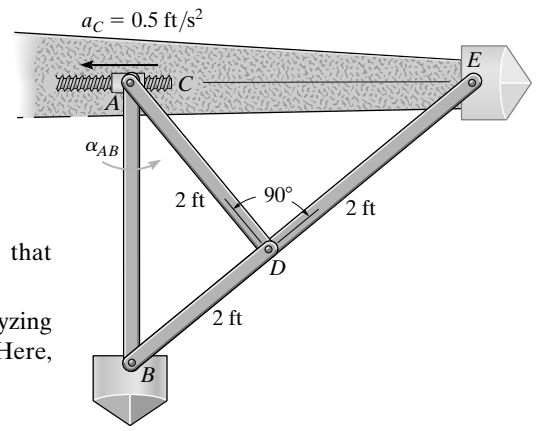

Velocity Analysis: Since $v_C = 0$, then $\omega_{CD} = 0$. Also, one can then show that $\omega_{BD} = \omega_{AB} = \omega_{ED} = 0$.

Acceleration Equation: The acceleration of point D can be obtained by analyzing the angular motion of link ED about point E. Here, $\mathbf{r}_{ED} = \{-2\cos 45°\mathbf{i} - 2\sin 45°\mathbf{j}\}\ \text{ft} = \{-1.414\mathbf{i} - 1.414\mathbf{j}\}\ \text{ft}$.

$$\mathbf{a}_D = \alpha_{ED} \times \mathbf{r}_{ED} - \omega_{ED}^2\,\mathbf{r}_{ED}$$

$$= (\alpha_{ED}\,\mathbf{k}) \times (-1.414\mathbf{i} - 1.414\mathbf{j}) - \mathbf{0}$$

$$= \{1.414\,\alpha_{ED}\,\mathbf{i} - 1.414\,\alpha_{ED}\,\mathbf{j}\}\ \text{ft/s}^2$$

The acceleration of point B can be obtained by analyzing the angular motion of links AB about point A. Here, $\mathbf{r}_{AB} = \{-2.828\mathbf{j}\}\ \text{ft}$

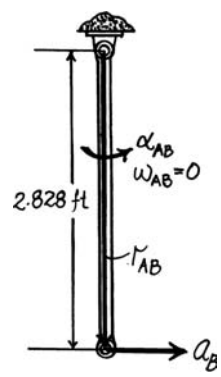

$$\mathbf{a}_B = \alpha_{AB} \times \mathbf{r}_{B/A} - \omega_{AB}^2\,\mathbf{r}_{B/A}$$

$$= (\alpha_{AB}\,\mathbf{k}) \times (-2.828\mathbf{j}) - \mathbf{0}$$

$$= \{2.828\,\alpha_{AB}\,\mathbf{i}\}\ \text{ft/s}^2$$

Link CD is subjected to general plane motion. Applying Eq. 16–18 with $\mathbf{r}_{D/C} = \{2\cos 44°\mathbf{i} - 2\sin 45°\mathbf{j}\}\ \text{ft} = \{1.414\mathbf{i} - 1.414\mathbf{j}\}\ \text{ft}$, we have

$$\mathbf{a}_D = \mathbf{a}_C + \alpha_{CD} \times \mathbf{r}_{D/C} - \omega_{CD}^2\mathbf{r}_{D/C}$$

$$1.414\,\alpha_{ED}\,\mathbf{i} - 1.414\,\alpha_{ED}\,\mathbf{j} = -0.5\mathbf{i} + \alpha_{CD}\mathbf{k} \times (1.414\mathbf{i} - 1.414\mathbf{j}) - \mathbf{0}$$

$$1.414\,\alpha_{ED}\,\mathbf{i} - 1.414\,\alpha_{ED}\,\mathbf{j} = (1.414\,\alpha_{CD} - 0.5)\,\mathbf{i} + 1.414\,\alpha_{CD}\mathbf{j}$$

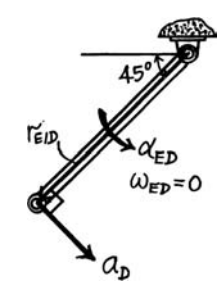

Equating **i** and **j** components, we have

$$1.414\,\alpha_{ED} = 1.414\alpha_{CD} - 0.5 \qquad \textbf{[1]}$$

$$-1.414\alpha_{ED} = 1.414\alpha_{CD} \qquad \textbf{[2]}$$

Solving Eqs.[1] and [2] yields

$$\alpha_{ED} = -0.1768\ \text{rad/s}^2$$

$$\alpha_{CD} = 0.177\ \text{rad/s}^2 \qquad \textbf{Ans.}$$

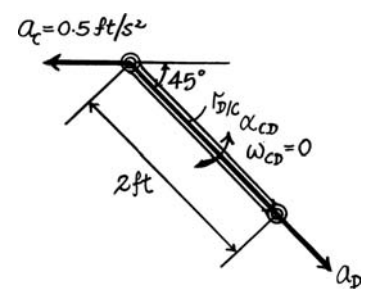

Link BD is subjected to general plane motion. Applying Eq. 16–18 with $\mathbf{r}_{B/D} = \{-2\cos 45°\mathbf{i} - 2\sin 45°\mathbf{j}\}\ \text{ft} = \{-1.414\mathbf{i} - 1.414\mathbf{j}\}\ \text{ft}$ and $\mathbf{a}_D = [1.414\,(-0.1768)\,\mathbf{i} - 1.414\,(-0.1768)\mathbf{j} = \{-0.25\mathbf{i} + 0.25\mathbf{j}\}\ \text{rad/s}^2$, we have

$$\mathbf{a}_B = \mathbf{a}_D + \alpha_{BD} \times \mathbf{r}_{B/D} - \omega_{BD}^2\mathbf{r}_{B/D}$$

$$2.828\,\alpha_{AB}\,\mathbf{i} = -0.25\mathbf{i} + 0.25\mathbf{j} + \alpha_{BD}\mathbf{k} \times (-1.414\mathbf{i} - 1.414\mathbf{j}) - \mathbf{0}$$

$$2.828\,\alpha_{AB}\,\mathbf{i} = (1.414\,\alpha_{BD} - 0.25)\,\mathbf{i} + (0.25 - 1.414\,\alpha_{BD})\,\mathbf{j}$$

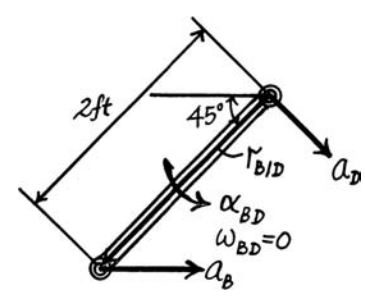

Equating **i** and **j** components, we have

$$2.828\,\alpha_{AB} = 1.414\,\alpha_{BD} - 0.25 \qquad \textbf{[3]}$$

$$0 = 0.25 - 1.414\,\alpha_{BD} \qquad \textbf{[4]}$$

Solving Eqs. [3] and [4] yields

$$\alpha_{BD} = 0.177\ \text{rad/s}^2 \qquad \alpha_{AB} = 0 \qquad \textbf{Ans.}$$

© 2010 Pearson Education, Inc., Upper Saddle River, NJ. All rights reserved. This material is protected under all copyright laws as they currently exist. No portion of this material may be reproduced, in any form or by any means, without permission in writing from the publisher.

16–134. Determine the angular velocity and the angular acceleration of the plate CD of the stone-crushing mechanism at the instant AB is horizontal. At this instant $\theta = 30°$ and $\phi = 90°$. Driving link AB is turning with a constant angular velocity of $\omega_{AB} = 4$ rad/s.

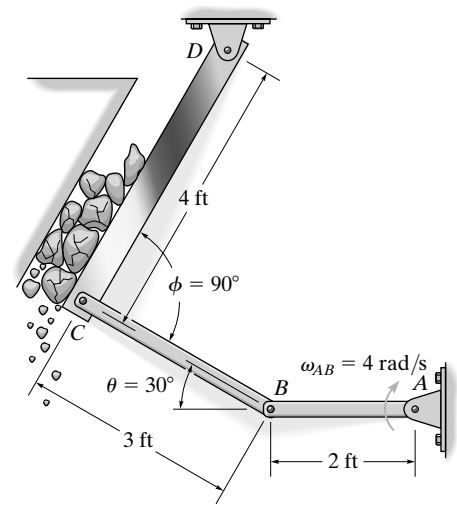

$v_B = \omega_{AB}\, r_{BA} = (4)(2) = 8 \text{ ft/s} \uparrow$

$\omega_{CB} = \dfrac{v_B}{r_{B/IC}} = \dfrac{8}{3/\cos 30°} = 2.309 \text{ rad/s}$

$v_C = \omega_{BC}\, r_{C/IC} = (2.309)(3 \tan 30°) = 4 \text{ ft/s}$

$\omega_{CD} = \dfrac{v_C}{r_{CD}} = \dfrac{4}{4} = 1 \text{ rad/s} \circlearrowright$ **Ans.**

$a_B = (a_B)_n = (4)^2(2) = 32 \text{ ft/s}^2 \rightarrow$

$(\mathbf{a}_C)_t + (\mathbf{a}_C)_n = \mathbf{a}_B + \alpha_{CB} \times \mathbf{r}_{C/B} - \omega^2 \mathbf{r}_{C/B}$

$(a_C)_t\,\mathbf{i} + (1)^2(4)\mathbf{j} = 32 \cos 30°\mathbf{i} + 32 \sin 30°\mathbf{j} + (\alpha_{CB}\,\mathbf{k}) \times (-3\mathbf{i}) - (2.309)^2(-3\mathbf{i})$

$(a_C)_t = 32 \cos 30° - (2.309)^2(-3) = 43.71 \text{ ft/s}^2$

$4 = 32 \sin 30° - \alpha_{CB}(3)$

$\alpha_{CB} = 4 \text{ rad/s}^2 \circlearrowleft$

$\alpha_{CD} = \dfrac{43.71}{4} = 10.9 \text{ rad/s}^2 \circlearrowleft$ **Ans.**

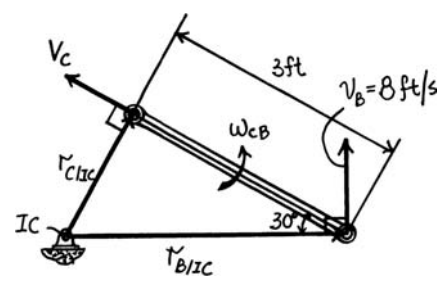

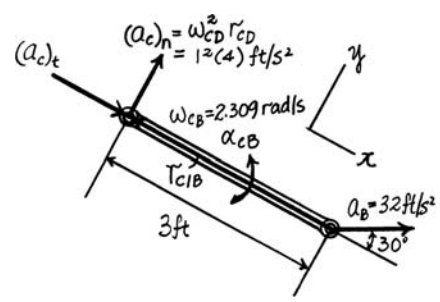

© 2010 Pearson Education, Inc., Upper Saddle River, NJ. All rights reserved. This material is protected under all copyright laws as they currently exist. No portion of this material may be reproduced, in any form or by any means, without permission in writing from the publisher.

16–135. At the instant shown, ball B is rolling along the slot in the disk with a velocity of 600 mm/s and an acceleration of 150 mm/s^2, both measured relative to the disk and directed away from O. If at the same instant the disk has the angular velocity and angular acceleration shown, determine the velocity and acceleration of the ball at this instant.

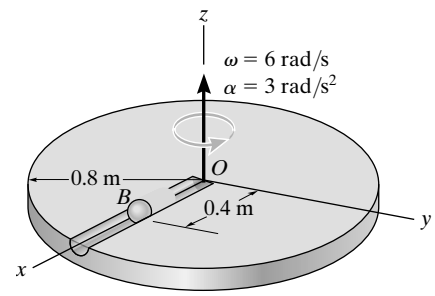

Kinematic Equations:

$\mathbf{v}_B = \mathbf{v}_O + \Omega \times \mathbf{r}_{B/O} + (\mathbf{v}_{B/O})_{xyz}$ **(1)**

$\mathbf{a}_B = \mathbf{a}_O + \dot{\Omega} \times \mathbf{r}_{B/O} + \Omega \times (\Omega \times \mathbf{r}_{B/O}) + 2\Omega \times (\mathbf{v}_{B/O})_{xyz} + (\mathbf{a}_{B/O})_{xyz}$ **(2)**

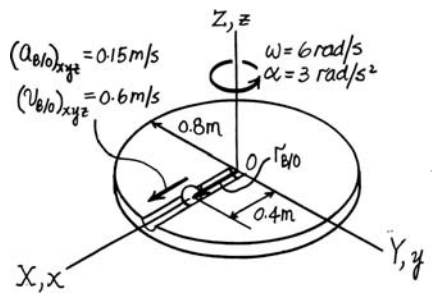

$\mathbf{v}_O = \mathbf{0}$

$\mathbf{a}_O = \mathbf{0}$

$\Omega = \{6\mathbf{k}\}$ rad/s

$\Omega = \{3\mathbf{k}\}$ rad/s^2

$\mathbf{r}_{B/O} = \{0.4\,\mathbf{i}\}$ m

$(\mathbf{v}_{B/O})_{xyz} = \{0.6\mathbf{i}\}$ m/s

$(\mathbf{a}_{B/O})_{xyz} = \{0.15\mathbf{i}\}$ m/s^2

Substitute the data into Eqs.(1) and (2) yields:

$\mathbf{v}_B = \mathbf{0} + (6\mathbf{k}) \times (0.4\mathbf{i}) + (0.6\mathbf{i}) = \{0.6\mathbf{i} + 2.4\mathbf{j}\}$ m/s **Ans.**

$\mathbf{a}_B = \mathbf{0} + (3\mathbf{k}) \times (0.4\mathbf{i}) + (6\mathbf{k}) \times [(6\mathbf{k}) \times (0.4\mathbf{i})] + 2\,(6\mathbf{k}) \times (0.6\mathbf{i}) + (0.15\mathbf{i})$

$= \{-14.2\mathbf{i} + 8.40\mathbf{j}\}$ m/s^2 **Ans.**

© 2010 Pearson Education, Inc., Upper Saddle River, NJ. All rights reserved. This material is protected under all copyright laws as they currently exist. No portion of this material may be reproduced, in any form or by any means, without permission in writing from the publisher.

***16–136.** Ball C moves along the slot from A to B with a speed of 3 ft/s, which is increasing at 1.5 ft/s^2, both measured relative to the circular plate. At this same instant the plate rotates with the angular velocity and angular deceleration shown. Determine the velocity and acceleration of the ball at this instant.

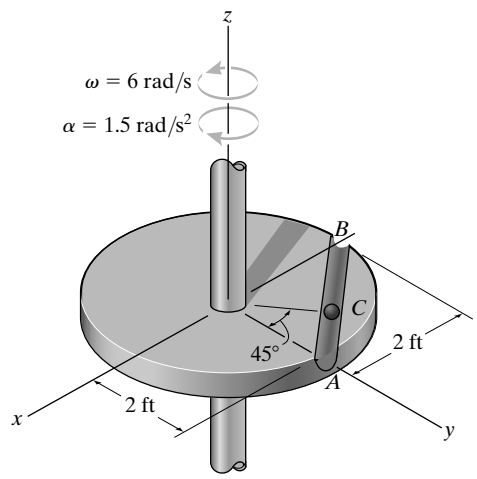

Reference Frames: The xyz rotating reference frame is attached to the plate and coincides with the fixed reference frame XYZ at the instant considered, Fig. a. Thus, the motion of the xyz frame with respect to the XYZ frame is

$$\mathbf{v}_O = \mathbf{a}_O = \mathbf{0} \qquad \omega = [6\mathbf{k}]\ \text{rad/s} \qquad \dot{\omega} = \alpha = [-1.5\mathbf{k}]\ \text{rad/s}^2$$

For the motion of ball C with respect to the xyz frame,

$$(\mathbf{v}_{\text{rel}})_{xyz} = (-3\sin 45°\mathbf{i} - 3\cos 45°\mathbf{j})\ \text{ft/s} = [-2.121\mathbf{i} - 2.121\mathbf{j}]\ \text{ft/s}$$

$$(\mathbf{a}_{\text{rel}})_{xyz} = (-1.5\sin 45°\mathbf{i} - 1.5\cos 45°\mathbf{j})\ \text{ft/s}^2 = [-1.061\mathbf{i} - 1.061\mathbf{j}]\ \text{ft/s}^2$$

From the geometry shown in Fig. b, $r_{C/O} = 2\cos 45° = 1.414$ ft. Thus,

$$\mathbf{r}_{C/O} = (-1.414\sin 45°\mathbf{i} + 1.414\cos 45°\mathbf{j})\text{ft} = [-1\mathbf{i} + 1\mathbf{j}]\ \text{ft}$$

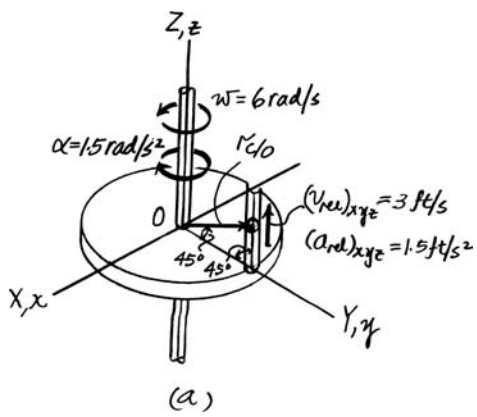

(a)

Velocity: Applying the relative velocity equation,

$$\mathbf{v}_C = \mathbf{v}_O + \omega \times \mathbf{r}_{C/O} + (\mathbf{v}_{\text{rel}})_{xyz}$$

$$= \mathbf{0} + (6\mathbf{k}) \times (-1\mathbf{i} + 1\mathbf{j}) + (-2.121\mathbf{i} - 2.121\mathbf{j})$$

$$= [-8.12\mathbf{i} - 8.12\mathbf{j}]\ \text{ft/s} \qquad \textbf{Ans.}$$

Acceleration: Applying the relative acceleration equation, we have

$$\mathbf{a}_C = \mathbf{a}_O + \dot{\omega} \times \mathbf{r}_{C/O} + \omega \times (\omega \times \mathbf{r}_{C/O}) + 2\omega \times (\mathbf{v}_{\text{rel}})_{xyz} + (a_{\text{rel}})_{xyz}$$

$$= 0 + (1.5\mathbf{k}) \times (-1\mathbf{i} + 1\mathbf{j}) + (6\mathbf{k}) \times [(6\mathbf{k}) \times (-1\mathbf{i} + 1\mathbf{j})] + 2(6\mathbf{k}) \times (-2.121\mathbf{i} - 2.121\mathbf{j}) + (-1.061\mathbf{i} - 1.061\mathbf{j})$$

$$= [61.9\mathbf{i} - 61.0\mathbf{j}]\text{ft/s}^2 \qquad \textbf{Ans.}$$

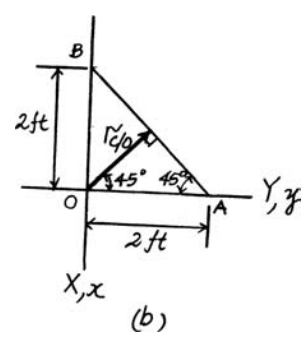

(b)

© 2010 Pearson Education, Inc., Upper Saddle River, NJ. All rights reserved. This material is protected under all copyright laws as they currently exist. No portion of this material may be reproduced, in any form or by any means, without permission in writing from the publisher.

•16–137. Ball C moves with a speed of 3 m/s, which is increasing at a constant rate of 1.5 m/s^2, both measured relative to the circular plate and directed as shown. At the same instant the plate rotates with the angular velocity and angular acceleration shown. Determine the velocity and acceleration of the ball at this instant.

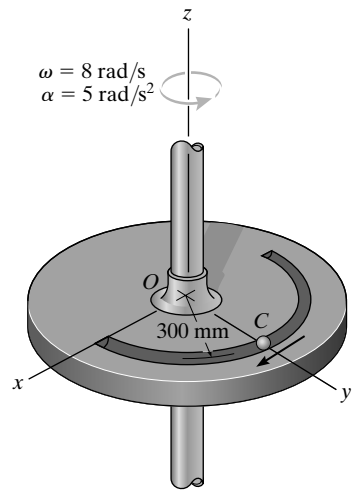

Reference Frames: The xyz rotating reference frame is attached to the plate and coincides with the fixed reference frame XYZ at the instant considered, Fig. a. Thus, the motion of the xyz frame with respect to the XYZ frame is

$$\mathbf{v}_O = \mathbf{a}_O = \mathbf{0} \qquad \omega = [8\mathbf{k}]\ \text{rad/s} \qquad \dot{\omega} = \alpha = [5\mathbf{k}]\ \text{rad/s}^2$$

For the motion of ball C with respect to the xyz frame, we have

$$\mathbf{r}_{C/O} = [0.3\mathbf{j}]\ \text{m}$$

$$(\mathbf{v}_{\text{rel}})_{xyz} = [3\mathbf{i}]\ \text{m/s}$$

The normal component of $(\mathbf{a}_{\text{rel}})_{xyz}$ is $\left[(a_{\text{rel}})_{xyz}\right]_n = \dfrac{(v_{\text{rel}})_{xyz}{}^2}{\rho} = \dfrac{3^2}{0.3} = 30\ \text{m/s}^2$. Thus,

$$(\mathbf{a}_{\text{rel}})_{xyz} = [1.5\mathbf{i} - 30\mathbf{j}]\ \text{m/s}$$

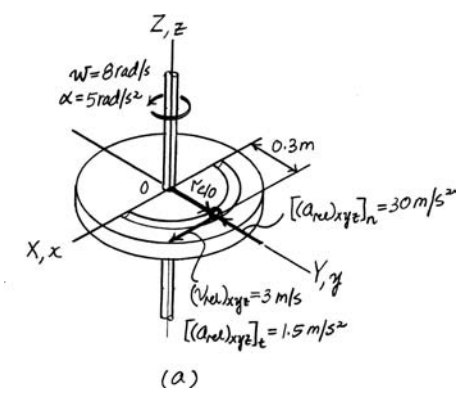

(a)

Velocity: Applying the relative velocity equation,

$$\mathbf{v}_C = \mathbf{v}_O + \omega \times \mathbf{r}_{C/O} + (\mathbf{v}_{\text{rel}})_{xyz}$$

$$= \mathbf{0} + (8\mathbf{k}) \times (0.3\mathbf{j}) + (3\mathbf{i})$$

$$= [0.6\mathbf{i}]\ \text{m/s} \qquad \textbf{Ans.}$$

Acceleration: Applying the relative acceleration equation.

$$\mathbf{a}_C = \mathbf{a}_O + \dot{\omega} \times \mathbf{r}_{C/O} + \omega \times (\omega \times \mathbf{r}_{C/O}) + 2\omega \times (\mathbf{v}_{\text{rel}})_{xyz} + (\mathbf{a}_{\text{rel}})_{xyz}$$

$$= \mathbf{0} + (5\mathbf{k}) \times (0.3\mathbf{j}) + (8\mathbf{k}) \times [(8\mathbf{k}) \times (0.3\mathbf{j})] + \mathbf{2}(8\mathbf{k}) \times (3\mathbf{i}) + (1.5\mathbf{i} - 30\mathbf{j})$$

$$= [-1.2\mathbf{j}]\ \text{m/s}^2 \qquad \textbf{Ans.}$$

© 2010 Pearson Education, Inc., Upper Saddle River, NJ. All rights reserved. This material is protected under all copyright laws as they currently exist. No portion of this material may be reproduced, in any form or by any means, without permission in writing from the publisher.

16–138. The crane's telescopic boom rotates with the angular velocity and angular acceleration shown. At the same instant, the boom is extending with a constant speed of 0.5 ft/s, measured relative to the boom. Determine the magnitudes of the velocity and acceleration of point B at this instant.

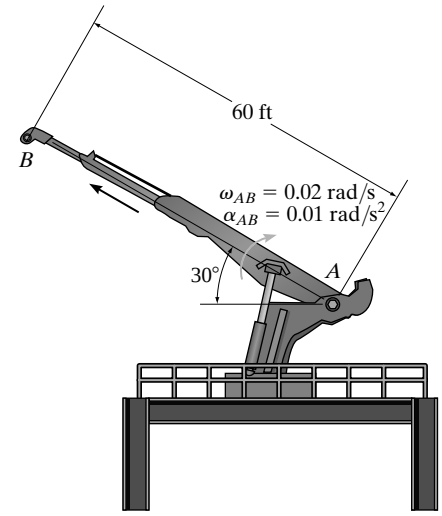

Reference Frames: The xyz rotating reference frame is attached to boom AB and coincides with the XY fixed reference frame at the instant considered, Fig. a. Thus, the motion of the xy frame with respect to the XY frame is

$$\mathbf{v}_A = \mathbf{a}_A = \mathbf{0} \qquad \omega_{AB} = [-0.02\mathbf{k}]\ \text{rad/s} \qquad \dot{\omega}_{AB} = \alpha = [-0.01\mathbf{k}]\ \text{rad/s}^2$$

For the motion of point B with respect to the xyz frame, we have

$$\mathbf{r}_{B/A} = [60\mathbf{j}]\ \text{ft} \qquad (\mathbf{v}_{\text{rel}})_{xyz} = [0.5\mathbf{j}]\ \text{ft/s} \qquad (\mathbf{a}_{\text{rel}})_{xyz} = \mathbf{0}$$

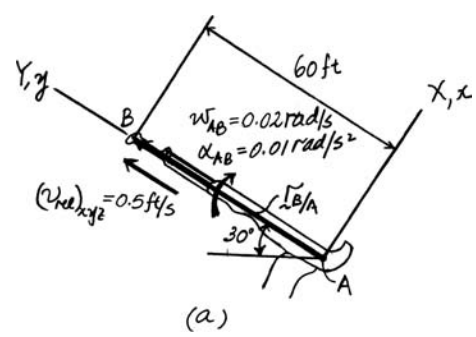

Velocity: Applying the relative velocity equation,

$$\begin{aligned}\mathbf{v}_B &= \mathbf{v}_A + \omega_{AB} \times \mathbf{r}_{B/A} + (\mathbf{v}_{\text{rel}})_{xyz}\\ &= \mathbf{0} + (-0.02\mathbf{k}) \times (60\mathbf{j}) + 0.5\mathbf{j}\\ &= [1.2\mathbf{i} + 0.5\mathbf{j}]\ \text{ft/s}\end{aligned}$$

Thus, the magnitude of $\mathbf{v}_B$, Fig. b, is

$$v_B = \sqrt{1.2^2 + 0.5^2} = 1.30\ \text{ft/s} \qquad \textbf{Ans.}$$

Acceleration: Applying the relative acceleration equation,

$$\begin{aligned}\mathbf{a}_B &= \mathbf{a}_A + \dot{\omega}_{AB} \times \mathbf{r}_{B/A} + \omega_{AB} \times (\omega_{AB} \times \mathbf{r}_{B/A}) + 2\omega_{AB} \times (\mathbf{v}_{\text{rel}})_{xyz} + (\mathbf{a}_{\text{rel}})_{xyz}\\ &= \mathbf{0} + (-0.01\mathbf{k}) \times (60\mathbf{j}) + (-0.02\mathbf{k}) \times [(-0.02\mathbf{k}) \times (60\mathbf{j})] + 2(-0.02\mathbf{k}) \times (0.5\mathbf{j}) + \mathbf{0}\\ &= [0.62\mathbf{i} - 0.024\,\mathbf{j}]\ \text{ft/s}^2\end{aligned}$$

Thus, the magnitude of $\mathbf{a}_B$, Fig. c, is

$$a_B = \sqrt{0.62^2 + (-0.024)^2} = 0.6204\ \text{ft/s}^2 \qquad \textbf{Ans.}$$

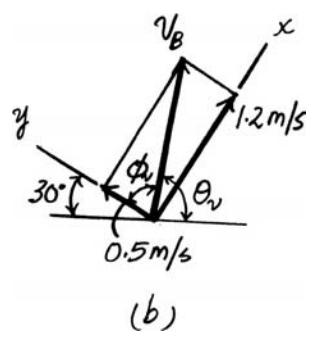

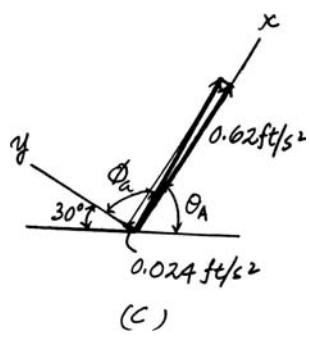

© 2010 Pearson Education, Inc., Upper Saddle River, NJ. All rights reserved. This material is protected under all copyright laws as they currently exist. No portion of this material may be reproduced, in any form or by any means, without permission in writing from the publisher.

16–139. The man stands on the platform at O and runs out toward the edge such that when he is at A, $y = 5$ ft, his mass center has a velocity of 2 ft/s and an acceleration of 3 ft/s^2, both measured relative to the platform and directed along the positive y axis. If the platform has the angular motions shown, determine the velocity and acceleration of his mass center at this instant.

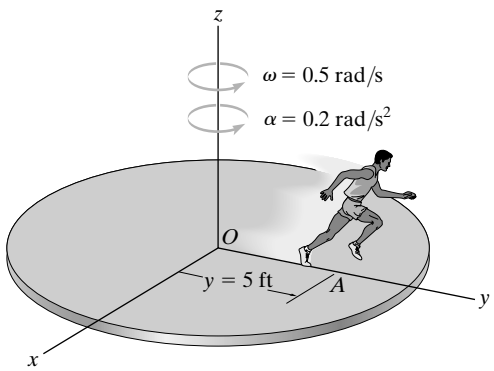

$$\mathbf{v}_A = \mathbf{v}_O + \Omega \times \mathbf{r}_{A/O} + (\mathbf{v}_{A/O})_{xyz}$$

$$\mathbf{v}_A = \mathbf{0} + (0.5\mathbf{k}) \times (5\mathbf{j}) + 2\mathbf{j}$$

$$\mathbf{v}_A = \{-2.50\mathbf{i} + 2.00\mathbf{j}\}\ \text{ft/s}$$ **Ans.**

$$\mathbf{a}_A = \mathbf{a}_O + \dot{\Omega} \times \mathbf{r}_{A/O} + \Omega \times (\Omega \times \mathbf{r}_{A/O}) + 2\Omega \times (\mathbf{v}_{A/O})_{xyz} + (\mathbf{a}_{A/O})_{xyz}$$

$$\mathbf{a}_A = \mathbf{0} + (0.2\mathbf{k}) \times (5\mathbf{j}) + (0.5\mathbf{k}) \times (0.5\mathbf{k} \times 5\mathbf{j}) + 2(0.5\mathbf{k}) \times (2\mathbf{j}) + 3\mathbf{j}$$

$$\mathbf{a}_A = -1\mathbf{i} - 1.25\mathbf{j} - 2\mathbf{i} + 3\mathbf{j}$$

$$\mathbf{a}_A = \{-3.00\mathbf{i} + 1.75\mathbf{j}\}\ \text{ft/s}^2$$ **Ans.**

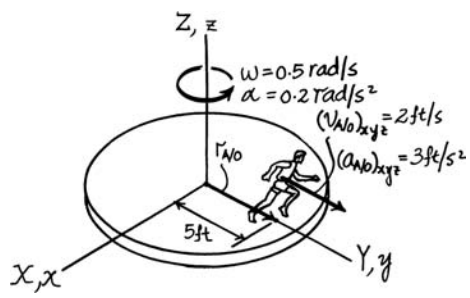

© 2010 Pearson Education, Inc., Upper Saddle River, NJ. All rights reserved. This material is protected under all copyright laws as they currently exist. No portion of this material may be reproduced, in any form or by any means, without permission in writing from the publisher.

***16–140.** At the instant $\theta = 45°$, link DC has an angular velocity of $\omega_{DC} = 4$ rad/s and an angular acceleration of $\alpha_{DC} = 2$ rad/s^2. Determine the angular velocity and angular acceleration of rod AB at this instant. The collar at C is pin connected to DC and slides freely along AB.

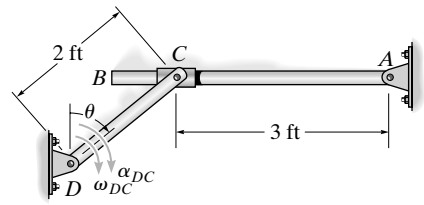

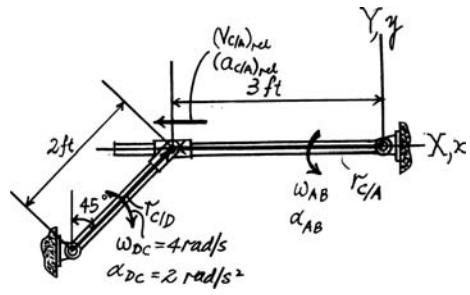

$\mathbf{v}_A = 0$

$\mathbf{a}_A = \mathbf{0}$

$\Omega = \omega_{AB}\,\mathbf{k}$

$\dot{\Omega} = \alpha_{AB}\,\mathbf{k}$

$\mathbf{r}_{C/A} = \{-3\mathbf{i}\}$ ft

$(\mathbf{v}_{C/A})_{xyz} = (v_{C/A})_{rel}\,\mathbf{i}$

$(\mathbf{a}_{C/A})_{xyz} = (a_{C/A})_{rel}\,\mathbf{i}$

$\mathbf{v}_C = \omega_{CD} \times \mathbf{r}_{C/D} = (-4\mathbf{k}) \times (2\sin 45°\mathbf{i} + 2\cos 45°\mathbf{j}) = \{5.6569\mathbf{i} - 5.6569\mathbf{j}\}$ ft/s

$\mathbf{a}_C = \alpha_{CD} \times \mathbf{r}_{C/D} - \omega_{CD}^2\,\mathbf{r}_{C/D}$

$= (-2\mathbf{k}) \times (2\sin 45°\mathbf{i} + 2\cos 45°\mathbf{j}) - (4)^2\,(2\sin 45°\mathbf{i} + 2\cos 45°\mathbf{j})$

$= \{-19.7990\mathbf{i} - 25.4558\mathbf{j}\}$ ft/s^2

$\mathbf{v}_C = \mathbf{v}_A + \Omega \times \mathbf{r}_{C/A} + (\mathbf{v}_{C/A})_{xyz}$

$5.6569\mathbf{i} - 5.6569\mathbf{j} = \mathbf{0} + (\omega_{AB}\mathbf{k}) \times (-3\mathbf{i}) + (v_{C/A})_{xyz}\,\mathbf{i}$

$5.6569\mathbf{i} - 5.6569\mathbf{j} = (v_{C/A})_{xyz}\,\mathbf{i} - 3\omega_{AB}\,\mathbf{j}$

Solving:

$(v_{C/A})_{xyz} = 5.6569$ ft/s

$\omega_{AB} = 1.89$ rad/s ↺ **Ans.**

$\mathbf{a}_C = \mathbf{a}_A + \dot{\Omega} \times \mathbf{r}_{C/A} + \Omega \times (\Omega \times \mathbf{r}_{C/A}) + 2\Omega \times (\mathbf{v}_{C/A})_{xyz} + (\mathbf{a}_{C/A})_{xyz}$

$-19.7990\mathbf{i} - 25.4558\mathbf{j} = \mathbf{0} + (\alpha_{AB}\,\mathbf{k}) \times (-3\mathbf{i}) + (1.89\mathbf{k}) \times [(1.89\mathbf{k}) \times (-3\mathbf{i})] + 2(1.89\mathbf{k}) \times (5.6569\mathbf{i}) + (a_{C/A})_{xyz}\,\mathbf{i}$

$-19.7990\mathbf{i} - 25.4558\mathbf{j} = [10.6667 + (a_{C/A})_{xyz}]\mathbf{i} + (21.334 - 3\alpha_{AB})\mathbf{j}$

Solving:

$(a_{C/A})_{xyz} = -30.47$ ft/s^2

$\alpha_{AB} = 15.6$ rad/s^2 ↺ **Ans.**

© 2010 Pearson Education, Inc., Upper Saddle River, NJ. All rights reserved. This material is protected under all copyright laws as they currently exist. No portion of this material may be reproduced, in any form or by any means, without permission in writing from the publisher.

•16–141. Peg B fixed to crank AB slides freely along the slot in member CDE. If AB rotates with the motion shown, determine the angular velocity of CDE at the instant shown.

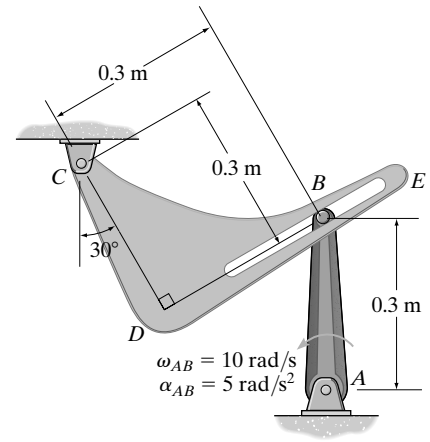

Reference Frame: The xyz rotating reference frame is attached to member CDE and coincides with the XYZ fixed reference frame at the instant considered. Thus, the motion of the xyz reference frame with respect to the XYZ frame is

$$\mathbf{v}_C = \mathbf{0} \qquad \omega_{CDE} = \omega_{CDE}\mathbf{k}$$

For the motion of point B with respect to the xyz frame,

$$\mathbf{r}_{B/C} = \left[\sqrt{0.3^2 + 0.3^2}\,\mathbf{i}\right] \text{m} = 0.3\sqrt{2}\mathbf{i}$$

$$\left(\mathbf{v}_{\text{rel}}\right)_{xyz} = \left(v_{\text{rel}}\right)_{xyz}\cos 45°\mathbf{i} + \left(v_{\text{rel}}\right)_{xyz}\sin 45°\mathbf{j} = 0.7071\left(v_{\text{rel}}\right)_{xyz}\mathbf{i} + 0.7071\left(v_{\text{rel}}\right)_{xyz}\mathbf{j}$$

Since crank AB rotates about a fixed axis, $\mathbf{v}_B$ and $\mathbf{a}_B$ with respect to the XYZ reference frame can be determined from

$$\begin{aligned}\mathbf{v}_B &= \omega_{AB} \times \mathbf{r}_B \\ &= \left(10\mathbf{k}\right) \times \left(-0.3\cos 75°\mathbf{i} + 0.3\sin 75°\mathbf{j}\right) \\ &= [-2.898\mathbf{i} - 0.7765\mathbf{j}] \text{ m/s}\end{aligned}$$

Velocity: Applying the relative velocity equation,

$$\mathbf{v}_B = \mathbf{v}_C + \omega_{CDE} \times \mathbf{r}_{B/C} + \left(\mathbf{v}_{\text{rel}}\right)_{xyz}$$

$$\left(-2.898\mathbf{i} - 0.7765\mathbf{j}\right) = \mathbf{0} + \left(\omega_{CDE}\,\mathbf{k}\right) \times \left(0.3\sqrt{2}\mathbf{i}\right) + 0.7071\left(v_{\text{rel}}\right)_{xyz}\mathbf{i} + 0.7071\left(v_{rel}\right)_{xyz}\mathbf{j}$$

$$-2.898\mathbf{i} - 0.7765\mathbf{j} = 0.7071\left(v_{\text{rel}}\right)_{xyz}\mathbf{i} + \left[0.3\sqrt{2}\omega_{CDE} + 0.7071\left(v_{\text{rel}}\right)_{xyz}\right]\mathbf{j}$$

Equating the **i** and **j** components yields

$$-2.898 = 0.7071(v_{\text{rel}})_{xyz} \qquad \textbf{(1)}$$

$$-0.7765 = 0.3\sqrt{2}\omega_{CDE} + 0.7071(v_{\text{rel}})_{xyz} \qquad \textbf{(2)}$$

Solving Eqs. (1) and (2) yields

$$(v_{\text{rel}})_{xyz} = -4.098 \text{ m/s}$$

$$\omega_{CDE} = 5 \text{ rad/s} \qquad \textbf{Ans.}$$

© 2010 Pearson Education, Inc., Upper Saddle River, NJ. All rights reserved. This material is protected under all copyright laws as they currently exist. No portion of this material may be reproduced, in any form or by any means, without permission in writing from the publisher.

16–142. At the instant shown rod AB has an angular velocity $\omega_{AB} = 4$ rad/s and an angular acceleration $\alpha_{AB} = 2$ rad/s^2. Determine the angular velocity and angular acceleration of rod CD at this instant. The collar at C is pin connected to CD and slides freely along AB.

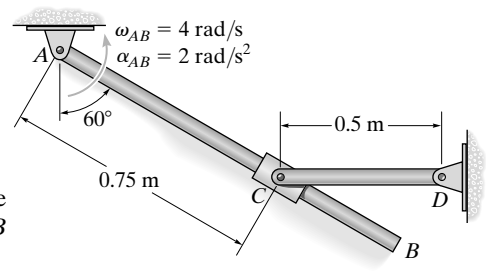

Coordinate Axes: The origin of both the fixed and moving frames of reference are located at point A. The x, y, z moving frame is attached to and rotate with rod AB since collar C slides along rod AB.

Kinematic Equation: Applying Eqs. 16–24 and 16–27, we have

$$\mathbf{v}_C = \mathbf{v}_A + \Omega \times \mathbf{r}_{C/A} + (\mathbf{v}_{C/A})_{xyz} \qquad \textbf{[1]}$$

$$\mathbf{a}_C = \mathbf{a}_A + \dot{\Omega} \times \mathbf{r}_{C/A} + \Omega \times (\Omega \times \mathbf{r}_{C/A}) + 2\Omega \times (\mathbf{v}_{C/A})_{xyz} + (\mathbf{a}_{C/A})_{xyz} \qquad \textbf{[2]}$$

Motion of moving reference

$\mathbf{v}_A = \mathbf{0}$

$\mathbf{a}_A = \mathbf{0}$

$\Omega = 4\mathbf{k}$ rad/s

$\dot{\Omega} = 2\mathbf{k}$ rad/s^2

Motion of C with respect to moving reference

$r_{C/A} = \{0.75\mathbf{i}\}$m

$(\mathbf{v}_{C/A})_{xyz} = (v_{C/A})_{xyz}\,\mathbf{i}$

$(\mathbf{a}_{C/A})_{xyz} = (a_{C/A})_{xyz}\,\mathbf{i}$

The velocity and acceleration of collar C can be determined using Eqs. 16–9 and 16–14 with $\mathbf{r}_{C/D} = \{-0.5\cos 30°\mathbf{i} - 0.5\sin 30°\mathbf{j}\}$m $= \{-0.4330\mathbf{i} - 0.250\mathbf{j}\}$ m.

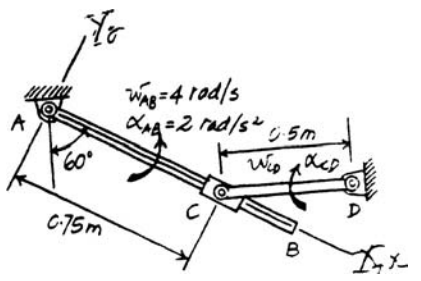

$$\mathbf{v}_C = \omega_{CD} \times \mathbf{r}_{C/D} = -\omega_{CD}\mathbf{k} \times (-0.4330\mathbf{i} - 0.250\mathbf{j})$$

$$= -0.250\omega_{CD}\mathbf{i} + 0.4330\omega_{CD}\mathbf{j}$$

$$\mathbf{a}_C = \alpha_{CD} \times \mathbf{r}_{C/D} - \omega_{CD}^2\,\mathbf{r}_{C/D}$$

$$= -\alpha_{CD}\,\mathbf{k} \times (-0.4330\mathbf{i} - 0.250\mathbf{j}) - \omega_{CD}^2(-0.4330\mathbf{i} - 0.250\mathbf{j})$$

$$= \left(0.4330\omega_{CD}^2 - 0.250\,\alpha_{CD}\right)\mathbf{i} + \left(0.4330\alpha_{CD} + 0.250\omega_{CD}^2\right)\mathbf{j}$$

Substitute the above data into Eq.[1] yields

$$\mathbf{v}_C = \mathbf{v}_A + \Omega \times \mathbf{r}_{C/A} + (\mathbf{v}_{C/A})_{xyz}$$

$$-0.250\,\omega_{CD}\,\mathbf{i} + 0.4330\omega_{CD}\mathbf{j} = \mathbf{0} + 4\mathbf{k} \times 0.75\mathbf{i} + (v_{C/A})_{xyz}\,\mathbf{i}$$

$$-0.250\omega_{CD}\,\mathbf{i} + 0.4330\omega_{CD}\mathbf{j} = (v_{C/A})_{xyz}\,\mathbf{i} + 3.00\mathbf{j}$$

Equating **i** and **j** components and solve, we have

$$(v_{C/A})_{xyz} = -1.732 \text{ m/s}$$

$$\omega_{CD} = 6.928 \text{ rad/s} = 6.93 \text{ rad/s} \qquad \textbf{Ans.}$$

Substitute the above data into Eq.[2] yields

$$\mathbf{a}_C = \mathbf{a}_A + \dot{\Omega} \times \mathbf{r}_{C/A} + \Omega \times (\Omega \times \mathbf{r}_{C/A}) + 2\Omega \times (v_{C/A})_{xyz} + (\mathbf{a}_{C/A})_{xyz}$$

$$\left[0.4330\left(6.928^2\right) - 0.250\,\alpha_{CD}\right]\mathbf{i} + \left[0.4330\alpha_{CD} + 0.250\left(6.928^2\right)\right]\mathbf{j}$$

$$= \mathbf{0} + 2\mathbf{k} \times 0.75\mathbf{i} + 4\mathbf{k} \times (4\mathbf{k} \times 0.75\mathbf{i}) + \mathbf{2}\,(4\mathbf{k}) \times (-1.732\mathbf{i}) + (a_{C/A})_{xyz}\,\mathbf{i}$$

$$(20.78 - 0.250\alpha_{CD})\mathbf{i} + (0.4330\,\alpha_{CD} + 12)\mathbf{j} = \left[(a_{C/A})_{xyz} - 12.0\right]\mathbf{i} - 12.36\mathbf{j}$$

Equating **i** and **j** components, we have

$$(a_{C/A})_{xyz} = 46.85 \text{ m/s}^2$$

$$\alpha_{CD} = -56.2 \text{ rad/s}^2 = 56.2 \text{ rad/s}^2 \quad \circlearrowleft \qquad \textbf{Ans.}$$

© 2010 Pearson Education, Inc., Upper Saddle River, NJ. All rights reserved. This material is protected under all copyright laws as they currently exist. No portion of this material may be reproduced, in any form or by any means, without permission in writing from the publisher.

16–143. At a given instant, rod AB has the angular motions shown. Determine the angular velocity and angular acceleration of rod CD at this instant. There is a collar at C.

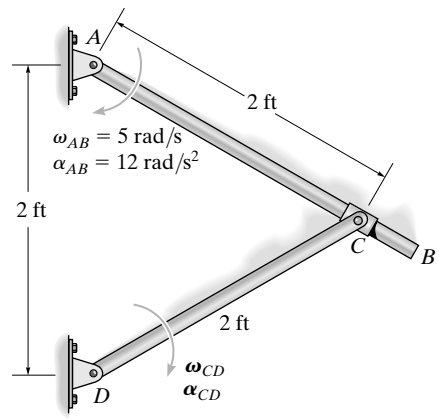

$\mathbf{v}_A = \mathbf{0}$

$\mathbf{a}_A = \mathbf{0}$

$\Omega = \{-5\mathbf{k}\}$ rad/s

$\dot{\Omega} = \{-12\mathbf{k}\}$ rad/s^2

$\mathbf{r}_{C/A} = \{2\mathbf{i}\}$ ft

$(\mathbf{v}_{C/A})_{xyz} = (v_{C/A})_{xyz}\,\mathbf{i}$

$(\mathbf{a}_{C/A})_{xyz} = (a_{C/A})_{xyz}\,\mathbf{i}$

$\mathbf{v}_C = \mathbf{v}_A + \Omega \times \mathbf{r}_{C/A} + (\mathbf{v}_{C/A})_{xyz}$

$\mathbf{v}_C = \mathbf{0} + (-5\mathbf{k}) \times (2\mathbf{i}) + (v_{C/A})_{xyz}\mathbf{i}$

$= (v_{C/A})_{xyz}\,\mathbf{i} - 10\mathbf{j}$

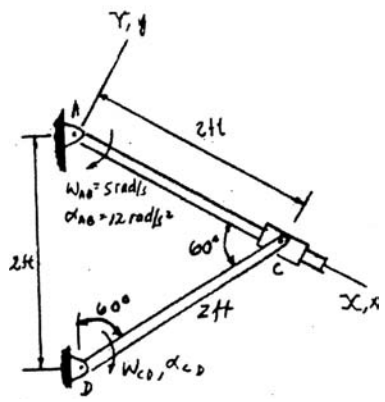

$$\mathbf{v}_C = \omega_{CD} \times \mathbf{r}_{CD}$$

$(v_{C/A})_{xyz}\,\mathbf{i} - 10\mathbf{j} = (-\omega_{CD}\,\mathbf{k}) \times (2\cos 60°\mathbf{i} + 2\sin 60°\mathbf{j})$

$(v_{C/A})_{xyz}\,\mathbf{i} - 10\mathbf{j} = 1.732\omega_{CD}\,\mathbf{i} - \omega_{CD}\mathbf{j}$

Solving:

$\omega_{CD} = 10$ rad/s ↻ **Ans.**

$(v_{C/A})_{xyz} = 1.732(10) = 17.32$ ft/s

$\mathbf{a}_C = \mathbf{a}_A + \dot{\Omega} \times \mathbf{r}_{C/A} + \Omega \times (\Omega \times \mathbf{r}_{C/A}) + 2\Omega \times (\mathbf{v}_{C/A})_{xyz} + (\mathbf{a}_{C/A})_{xyz}$

$\mathbf{a}_C = \mathbf{0} + (-12\mathbf{k}) \times (2\mathbf{i}) + (-5\mathbf{k}) \times [(-5\mathbf{k}) \times (2\mathbf{i})] + 2(-5\mathbf{k}) \times [(v_{C/A})_{xyz}\mathbf{i}] + (a_{C/A})_{xyz}\,\mathbf{i}$

$= [(a_{C/A})_{xyz} - 50]\mathbf{i} - [10(v_{C/A})_{xyz} + 24]\mathbf{j}$

$\mathbf{a}_C = \alpha_{CD} \times \mathbf{r}_{C/D} - \omega_{CD}^2\,\mathbf{r}_{CD}$

$[(a_{C/A})_{xyz} - 50]\mathbf{i} - [10(17.32) + 24]\mathbf{j} = (-\alpha_{CD}\,\mathbf{k}) \times (2\cos 60°\mathbf{i} + 2\sin 60°\mathbf{j}) - (10)^2(2\cos 60°\mathbf{i} + 2\sin 60°\mathbf{j})$

$[(a_{C/A})_{xyz} - 50]\mathbf{i} - (10(17.32) + 24]\mathbf{j} = (1.732\,\alpha_{CD} - 100)\mathbf{i} - (\alpha_{CD} + 173.2)\mathbf{j}$

Solving:

$-[10(17.32) + 24] = -(\alpha_{CD} + 173.2)$ $\quad \alpha_{CD} = 24$ rad/s^2 ↻ **Ans.**

$(a_{C/A})_{xyz} - 50 = 1.732(24) - 100$ $\quad (a_{C/A})_{xyz} = -8.43$ ft/s^2

© 2010 Pearson Education, Inc., Upper Saddle River, NJ. All rights reserved. This material is protected under all copyright laws as they currently exist. No portion of this material may be reproduced, in any form or by any means, without permission in writing from the publisher.

***16–144.** The dumpster pivots about C and is operated by the hydraulic cylinder AB. If the cylinder is extending at a constant rate of 0.5 ft/s, determine the angular velocity $\boldsymbol{\omega}$ of the container at the instant it is in the horizontal position shown.

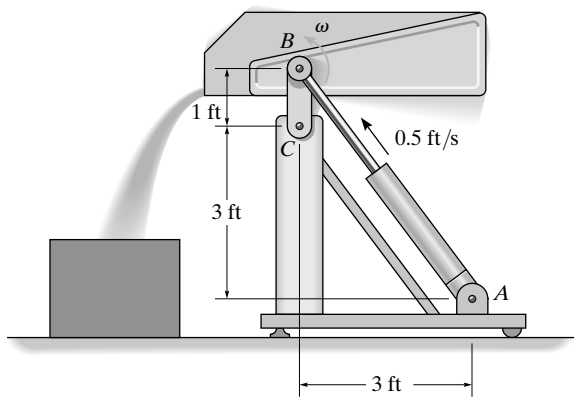

$$\mathbf{r}_{B/A} = 5\,\mathbf{j}$$

$$\mathbf{v}_{B/A} = 0.5\mathbf{j}$$

$$\mathbf{v}_B = -\frac{4}{5}\omega(1)\mathbf{i} + \frac{3}{5}\omega(1)\mathbf{j}$$

$$\mathbf{v}_B = \mathbf{v}_A + \Omega \times \mathbf{r}_{B/A} + (\mathbf{v}_{B/A})_{xyz}$$

$$-\frac{4}{5}\omega(1)\mathbf{i} + \frac{3}{5}\omega(1)\mathbf{j} = \mathbf{0} + (\Omega\mathbf{k}) \times (5\mathbf{j}) + 0.5\mathbf{j}$$

$$-\frac{4}{5}\omega(1)\mathbf{i} + \frac{3}{5}\omega(1)\mathbf{j} = -\Omega(5)\mathbf{i} + 0.5\mathbf{j}$$

Thus,

$$\omega = 0.833 \text{ rad/s} \quad \circlearrowleft \qquad \textbf{Ans.}$$

$$\Omega = 0.133 \text{ rad/s}$$

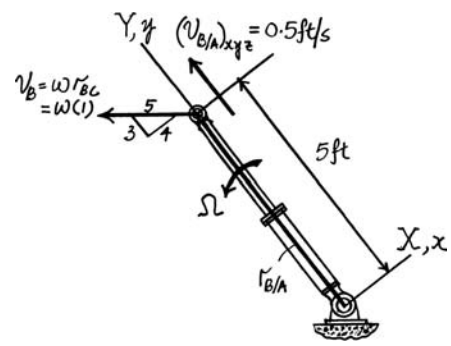

© 2010 Pearson Education, Inc., Upper Saddle River, NJ. All rights reserved. This material is protected under all copyright laws as they currently exist. No portion of this material may be reproduced, in any form or by any means, without permission in writing from the publisher.

•16–145. The disk rolls without slipping and at a given instant has the angular motion shown. Determine the angular velocity and angular acceleration of the slotted link BC at this instant. The peg at A is fixed to the disk.

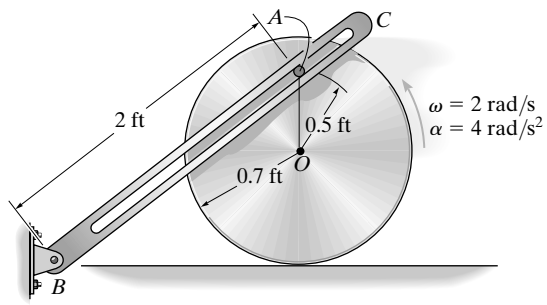

$\mathbf{v}_A = -(1.2)(2)\mathbf{i} = -2.4\mathbf{i}$ ft/s

$\mathbf{a}_A = \mathbf{a}_O + \alpha \times \mathbf{r}_{A/O} - \omega^2\mathbf{r}_{A/O}$

$\mathbf{a}_A = -4(0.7)\mathbf{i} + (4\mathbf{k}) \times (0.5\mathbf{j}) - (2)^2(0.5\mathbf{j})$

$\mathbf{a}_A = -4.8\,\mathbf{i} - 2\mathbf{j}$

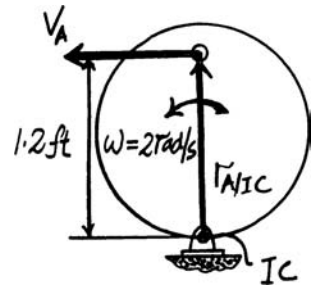

$\mathbf{v}_A = \mathbf{v}_B + \Omega \times \mathbf{r}_{A/B} + (\mathbf{v}_{A/B})_{xyz}$

$-2.4\mathbf{i} = \mathbf{0} + (\omega_{BC}\mathbf{k}) \times (1.6\mathbf{i} + 1.2\mathbf{j}) + v_{A/B}\left(\frac{4}{5}\right)\mathbf{i} + v_{A/B}\left(\frac{3}{5}\right)\mathbf{j}$

$-2.4\mathbf{i} = 1.6\,\omega_{BC}\,\mathbf{j} - 1.2\,\omega_{BC}\,\mathbf{i} + 0.8v_{A/B}\mathbf{i} + 0.6v_{A/B}\,\mathbf{j}$

$-2.4 = -1.2\,\omega_{BC} + 0.8\,v_{A/B}$

$0 = 1.6\omega_{BC} + 0.6v_{A/B}$

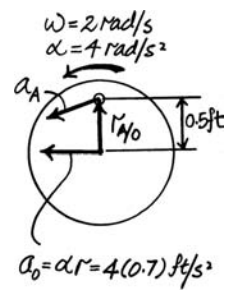

Solving,

$$\omega_{BC} = 0.720 \text{ rad/s} \quad \circlearrowleft \qquad \textbf{Ans.}$$

$$v_{A/B} = -1.92 \text{ ft/s}$$

$\mathbf{a}_A = \mathbf{a}_B + \Omega \times \mathbf{r}_{A/B} + \Omega \times (\Omega \times \mathbf{r}_{A/B}) + 2\Omega \times (\mathbf{v}_{A/B})_{xyz} + (\mathbf{a}_{A/B})_{xyz}$

$-4.8\mathbf{i} - 2\mathbf{j} = \mathbf{0} + (\alpha_{BC}\,\mathbf{k}) \times (1.6\mathbf{i} + 1.2\mathbf{j}) + (0.72\mathbf{k}) \times (0.72\mathbf{k} \times (1.6\mathbf{i} + 1.2\mathbf{j}))$

$+2(0.72\mathbf{k}) \times \left[-(0.8)(1.92)\mathbf{i} - 0.6(1.92)\mathbf{j}\right] + 0.8\,a_{B/A}\mathbf{i} + 0.6a_{B/A}\,\mathbf{j}$

$-4.8\mathbf{i} - 2\mathbf{j} = 1.6\alpha_{BC}\mathbf{j} - 1.2\alpha_{BC}\,\mathbf{i} - 0.8294\mathbf{i} - 0.6221\mathbf{j} - 2.2118\mathbf{j} + 1.6589\mathbf{i} + 0.8a_{B/A}\,\mathbf{i} + 0.6a_{B/A}\,\mathbf{j}$

$-4.8 = -1.2\alpha_{BC} - 0.8294 + 1.6589 + 0.8a_{B/A}$

$-2 = 1.6\alpha_{BC} - 0.6221 - 2.2118 + 0.6a_{B/A}$

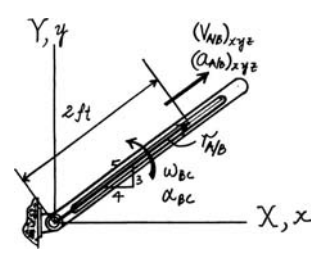

Solving,

$$\alpha_{BC} = 2.02 \text{ rad/s}^2 \quad \circlearrowleft \qquad \textbf{Ans.}$$

$$a_{B/A} = -4.00 \text{ ft/s}^2$$

© 2010 Pearson Education, Inc., Upper Saddle River, NJ. All rights reserved. This material is protected under all copyright laws as they currently exist. No portion of this material may be reproduced, in any form or by any means, without permission in writing from the publisher.

16–146. The wheel is rotating with the angular velocity and angular acceleration at the instant shown. Determine the angular velocity and angular acceleration of the rod at this instant. The rod slides freely through the smooth collar.

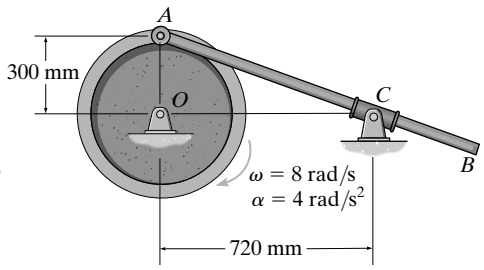

Reference Frame: The xyz rotating reference frame is attached to C and coincides with the XYZ fixed reference frame at the instant considered, Fig. a. Thus, the motion of the xyz reference frame with respect to the XYZ frame is

$$\mathbf{v}_C = \mathbf{a}_C = 0 \qquad \omega_{AB} = -\omega_{AB}\mathbf{k} \qquad \dot{\omega}_{AB} = -\alpha_{AB}\,\mathbf{k}$$

From the geometry shown in Fig.a,

$$r_{A/C} = \sqrt{0.3^2 + 0.72^2} = 0.78 \text{ m}$$

$$\theta = \tan^{-1}\left(\frac{0.72}{0.3}\right) = 67.38°$$

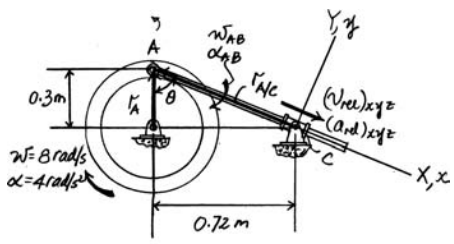

(a)

For the motion of point A with respect to the xyz frame,

$$\mathbf{r}_{A/C} = [-0.78\mathbf{i}] \text{ m} \qquad (\mathbf{v}_{\text{rel}})_{xyz} = (v_{\text{rel}})_{xyz}\,\mathbf{i} \qquad (\mathbf{a}_{\text{rel}})_{xyz} = (a_{\text{rel}})_{xyz}\,\mathbf{i}$$

Since the wheel A rotates about a fixed axis, $\mathbf{v}_A$ and $\mathbf{a}_A$ with respect to the XYZ reference frame can be determined from

$$\mathbf{v}_A = \omega \times \mathbf{r}_A$$

$$= (-8\mathbf{k}) \times (-0.3\cos 67.38°\mathbf{i} + 0.3\sin 67.38°\mathbf{j})$$

$$= [2.215\mathbf{i} + 0.9231\mathbf{j}] \text{ m/s}$$

$$\mathbf{a}_A = \alpha \times \mathbf{r}_A - \omega^2\mathbf{r}_A$$

$$= (-4\mathbf{k}) \times (-0.3\cos 67.38°\mathbf{i} + 0.3\sin 67.38°\,\mathbf{j}) - 8^2(-0.3\cos 67.38°\mathbf{i} + 0.3\sin 67.38°\mathbf{j})$$

$$= [8.492\mathbf{i} - 17.262\mathbf{j}] \text{ m/s}^2$$

Velocity: Applying the relative velocity equation, we have

$$\mathbf{v}_A = \mathbf{v}_C + \omega_{AB} \times \mathbf{r}_{A/C} + (\mathbf{v}_{\text{rel}})_{xyz}$$

$$2.215\mathbf{i} + 0.9231\mathbf{j} = \mathbf{0} + (-\omega_{AB}\mathbf{k}) \times (-0.78\mathbf{i}) + (v_{\text{rel}})_{xyz}\,\mathbf{i}$$

$$2.215\mathbf{i} + 0.9231\mathbf{j} = (v_{\text{rel}})_{xyz}\,\mathbf{i} + 0.78\omega_{AB}\,\mathbf{j}$$

Equating the **i** and **j** components yields

$$(v_{\text{rel}})_{xyz} = 2.215 \text{ m/s}$$

$$0.78\omega_{AB} = 0.9231 \qquad \omega_{AB} = 1.183 \text{ rad/s} = 1.18 \text{ rad/s} \qquad \textbf{Ans.}$$

Acceleration: Applying the relative acceleration equation.

$$\mathbf{a}_A = \mathbf{a}_C + \dot{\omega}_{AB} \times \mathbf{r}_{A/C} + \omega_{AB} \times (\omega_{AB} \times \mathbf{r}_{A/C}) + 2\omega_{AB} \times (\mathbf{v}_{\text{rel}})_{xyx} + (\mathbf{a}_{\text{rel}})_{xyz}$$

$$8.492\mathbf{i} - 17.262\mathbf{j} = \mathbf{0} + (-\alpha_{AB}\mathbf{k}) \times (-0.78\mathbf{i}) + (-1.183\mathbf{k}) \times [(-1.183\mathbf{k}) \times (-0.78\mathbf{i})] + 2(-1.183\mathbf{k}) \times (2.215\mathbf{i}) + (a_{\text{rel}})_{xyz}\mathbf{i}$$

$$8.492\mathbf{i} - 17.262\mathbf{j} = \left[\left(a_{\text{rel}}\right)_{xyz} + 1.092\right]\mathbf{i} + \left(0.78\alpha_{AB} - 5.244\right)\mathbf{j}$$

Equating the **j** components yields

$$-17.262 = 0.78\alpha_{AB} - 5.244$$

$$\alpha_{AB} = -15.41 \text{ rad/s}^2 = 15.4 \text{ rad/s}^2 \circlearrowleft \qquad \textbf{Ans.}$$

© 2010 Pearson Education, Inc., Upper Saddle River, NJ. All rights reserved. This material is protected under all copyright laws as they currently exist. No portion of this material may be reproduced, in any form or by any means, without permission in writing from the publisher.

16–147. The two-link mechanism serves to amplify angular motion. Link AB has a pin at B which is confined to move within the slot of link CD. If at the instant shown, AB (input) has an angular velocity of $\omega_{AB} = 2.5$ rad/s and an angular acceleration of $\alpha_{AB} = 3\ \text{rad/s}^2$, determine the angular velocity and angular acceleration of CD (output) at this instant.

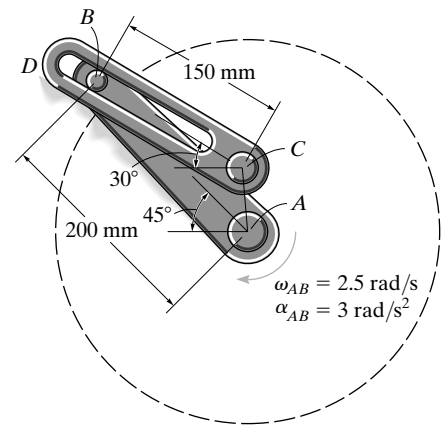

$\mathbf{v}_C = \mathbf{0}$

$\mathbf{a}_C = \mathbf{0}$

$\Omega = -\omega_{DC}\,\mathbf{k}$

$\dot{\Omega} = -\alpha_{DC}\,\mathbf{k}$

$\mathbf{r}_{B/C} = \{-0.15\,\mathbf{i}\}$ m

$(\mathbf{v}_{B/C})_{xyz} = (v_{B/C})_{xyz}\,\mathbf{i}$

$(\mathbf{a}_{B/C})_{xyz} = (a_{B/C})_{xyz}\,\mathbf{i}$

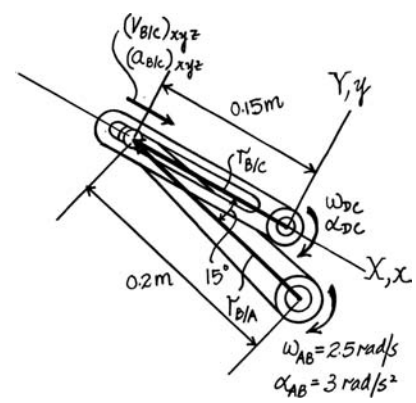

$\mathbf{v}_B = \omega_{AB} \times \mathbf{r}_{B/A} = (-2.5\mathbf{k}) \times (-0.2\cos 15°\mathbf{i} + 0.2\sin 15°\mathbf{j})$

$= \{0.1294\mathbf{i} + 0.4830\mathbf{j}\}$ m/s

$\mathbf{a}_B = \alpha_{AB} \times \mathbf{r}_{B/A} - \omega_{AB}^2\,\mathbf{r}_{B/A}$

$= (-3\mathbf{k}) \times (-0.2\cos 15°\mathbf{i} + 0.2\sin 15°\mathbf{j}) - (2.5)^2(-0.2\cos 15°\mathbf{i} + 0.2\sin 15°\mathbf{j})$

$= \{1.3627\mathbf{i} + 0.2560\mathbf{j}\}$ m/s^2

$\mathbf{v}_B = \mathbf{v}_C + \Omega \times \mathbf{r}_{B/C} + (\mathbf{v}_{B/C})_{xyz}$

$0.1294\mathbf{i} + 0.4830\mathbf{j} = \mathbf{0} + (-\omega_{DC}\mathbf{k}) \times (-0.15\mathbf{i}) + (v_{B/C})_{xyz}\,\mathbf{i}$

$0.1294\mathbf{i} + 0.4830\mathbf{j} = (v_{B/C})_{xyz}\,\mathbf{i} + 0.15\omega_{DC}\,\mathbf{j}$

Solving:

$$(v_{B/C})_{xyz} = 0.1294 \text{ m/s}$$

$$\omega_{DC} = 3.22 \text{ rad/s} \circlearrowright \qquad \textbf{Ans.}$$

$\mathbf{a}_B = \mathbf{a}_C + \dot{\Omega} \times \mathbf{r}_{B/C} + \Omega \times (\Omega \times \mathbf{r}_{B/C}) + 2\Omega \times (\mathbf{v}_{B/C})_{xyz} + (\mathbf{a}_{B/C})_{xyz}$

$1.3627\mathbf{i} + 0.2560\mathbf{j} = \mathbf{0} + (-\alpha_{DC}\mathbf{k}) \times (-0.15\mathbf{i}) + (-3.22\mathbf{k}) \times \left[(-3.22\mathbf{k}) \times (-0.15\mathbf{i})\right] + 2(-3.22\mathbf{k}) \times (0.1294\mathbf{i}) + (a_{B/C})_{xyz}\,\mathbf{i}$

$1.3627\mathbf{i} + 0.2560\mathbf{j} = \left[1.5550 + (a_{B/C})_{xyz}\right]\mathbf{i} + (0.15\,\alpha_{DC} - 0.8333)\mathbf{j}$

Solving:

$$(a_{B/C})_{xyz} = -0.1923 \text{ m/s}^2$$

$$\alpha_{DC} = 7.26 \text{ rad/s}^2 \circlearrowright \qquad \textbf{Ans.}$$

© 2010 Pearson Education, Inc., Upper Saddle River, NJ. All rights reserved. This material is protected under all copyright laws as they currently exist. No portion of this material may be reproduced, in any form or by any means, without permission in writing from the publisher.

***16–148.** The gear has the angular motion shown. Determine the angular velocity and angular acceleration of the slotted link *BC* at this instant. The peg *A* is fixed to the gear.

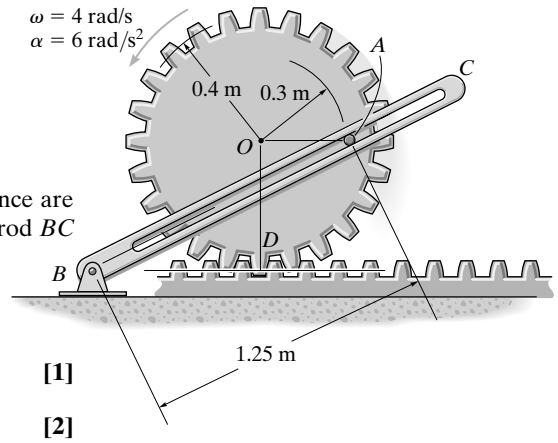

Coordinate Axes: The origin of both the fixed and moving frames of reference are located at point *B*. The *x, y, z* moving frame is attached to and rotates with rod *BC* since peg *A* slides along slot in member *BC*.

Kinematic Equation: Applying Eqs. 16–24 and 16–27, we have

$$\mathbf{v}_A = \mathbf{v}_B + \Omega \times \mathbf{r}_{A/B} + (\mathbf{v}_{A/B})_{xyz} \qquad \textbf{[1]}$$

$$\mathbf{a}_A = \mathbf{a}_B + \dot{\Omega} \times \mathbf{r}_{A/B} + \Omega \times (\Omega \times \mathbf{r}_{A/B}) + 2\Omega \times (\mathbf{v}_{A/B})_{xyz} + (\mathbf{a}_{A/B})_{xyz} \qquad \textbf{[2]}$$

Motion of moving reference

$\mathbf{v}_B = \mathbf{0}$

$\mathbf{a}_B = \mathbf{0}$

$\Omega = \omega_{BC}\,\mathbf{k}$

$\dot{\Omega} = \alpha_{BC}\,\mathbf{k}$

Motion of C with respect to moving reference

$\mathbf{r}_{A/B} = \{1.25\mathbf{i}\}$ m

$(\mathbf{v}_{A/B})_{xyz} = (v_{A/B})_{xyz}\,\mathbf{i}$

$(\mathbf{a}_{A/B})_{xyz} = (a_{A/B})_{xyz}\,\mathbf{i}$

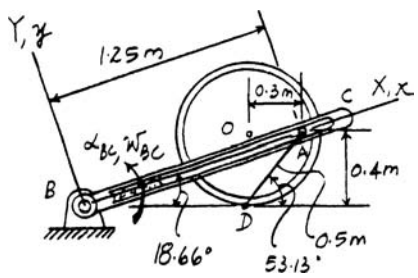

The velocity and acceleration of peg *A* can be determined using Eqs. 16–16 and 16–18 with $\mathbf{r}_{A/D} = \{0.5\cos 34.47°\mathbf{i} + 0.5\sin 34.47°\mathbf{j}\}$ m $= \{0.4122\mathbf{i} + 0.2830\mathbf{j}\}$ m.

$$\mathbf{v}_A = \mathbf{v}_D + \omega \times \mathbf{r}_{A/D} = \mathbf{0} + 4\mathbf{k} \times (0.4122\mathbf{i} + 0.2830\mathbf{j})$$

$$= \{-1.1319\mathbf{i} + 1.6489\mathbf{j}\}\ \text{m/s}$$

$$\mathbf{a}_A = \mathbf{a}_D + \alpha \times \mathbf{r}_{A/D} - \omega^2\mathbf{r}_{A/D}$$

$$= 6.40\sin 18.66°\mathbf{i} + 6.40\cos 18.66°\mathbf{j} + 6\mathbf{k} \times (0.4122\mathbf{i} + 0.2830\mathbf{j}) - 4^2(0.4122\mathbf{i} + 0.2830\mathbf{j})$$

$$= \{-6.2454\mathbf{i} + 4.0094\mathbf{j}\}\ \text{m/s}^2$$

Substitute the above data into Eq.[1] yields

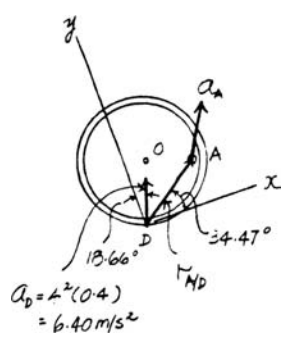

$$\mathbf{v}_A = \mathbf{v}_B + \Omega \times \mathbf{r}_{A/B} + (\mathbf{v}_{A/B})_{xyz}$$

$$-1.1319\mathbf{i} + 1.6489\mathbf{j} = \mathbf{0} + \omega_{BC}\mathbf{k} \times 1.25\mathbf{i} + (v_{A/B})_{xyz}\,\mathbf{i}$$

$$-1.1319\mathbf{i} + 1.6489\mathbf{j} = (v_{A/B})_{xyz}\,\mathbf{i} + 1.25\,\omega_{BC}\mathbf{j}$$

Equating **i** and **j** components and solving, we have

$$(v_{A/B})_{xyz} = -1.1319\ \text{m/s}$$

$$\omega_{BC} = 1.3191\ \text{rad/s} = 1.32\ \text{rad/s} \qquad \textbf{Ans.}$$

Substitute the above data into Eq.[2] yields

$$\mathbf{a}_A = \mathbf{a}_B + \dot{\Omega} \times \mathbf{r}_{A/B} + \Omega \times (\Omega \times \mathbf{r}_{A/B}) + 2\Omega \times (\mathbf{v}_{A/B})_{xyz} + (\mathbf{a}_{A/B})_{xyz}$$

$$-6.2454\mathbf{i} + 4.0094\mathbf{j} = \mathbf{0} + \alpha_{BC}\,\mathbf{k} \times 1.25\mathbf{i} + 1.3191\mathbf{k} \times (1.3191\mathbf{k} \times 1.25\mathbf{i}) + 2(1.3191\mathbf{k}) \times (-1.1319\mathbf{i}) + (a_{A/B})_{xyz}\,\mathbf{i}$$

$$-6.2454\mathbf{i} + 4.0094\mathbf{j} = \left[(a_{A/B})_{xyz} - 2.1751\right]\mathbf{i} + (1.25\alpha_{BC} - 2.9861)\mathbf{j}$$

Equating **i** and **j** components, we have

$$(a_{A/B})_{xyz} = -4.070\ \text{m/s}^2$$

$$\alpha_{BC} = 5.60\ \text{rad/s}^2 \qquad \textbf{Ans.}$$

© 2010 Pearson Education, Inc., Upper Saddle River, NJ. All rights reserved. This material is protected under all copyright laws as they currently exist. No portion of this material may be reproduced, in any form or by any means, without permission in writing from the publisher.

•16–149. Peg B on the gear slides freely along the slot in link AB. If the gear's center O moves with the velocity and acceleration shown, determine the angular velocity and angular acceleration of the link at this instant.

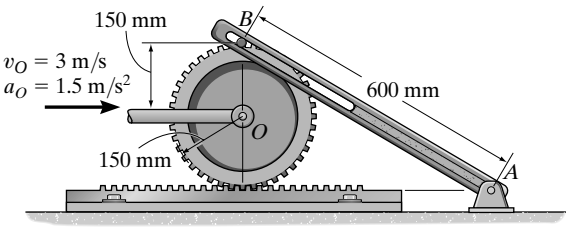

Gear Motion: The IC of the gear is located at the point where the gear and the gear rack mesh, Fig. a. Thus,

$$\omega = \frac{v_O}{r_{O/IC}} = \frac{3}{0.15} = 20 \text{ rad/s}$$

Then,

$$v_B = \omega r_{B/IC} = 20(0.3) = 6 \text{ m/s} \rightarrow$$

Since the gear rolls on the gear rack, $\alpha = \dfrac{a_O}{r} = \dfrac{1.5}{0.15} = 10$ rad/s. By referring to Fig. b,

$$\mathbf{a}_B = \mathbf{a}_O + \alpha \times \mathbf{r}_{B/O} - \omega^2 \mathbf{r}_{B/O}$$

$$(a_B)_t \mathbf{i} - (a_B)_n \mathbf{j} = 1.5\mathbf{i} + (-10\mathbf{k}) \times 0.15\mathbf{j} - 20^2(0.15\mathbf{j})$$

$$(a_B)_t \mathbf{i} - (a_B)_n \mathbf{j} = 3\mathbf{i} - 60\mathbf{j}$$

Thus,

$$(a_B)_t = 3 \text{ m/s}^2 \qquad (a_B)_n = 60 \text{ m/s}^2$$

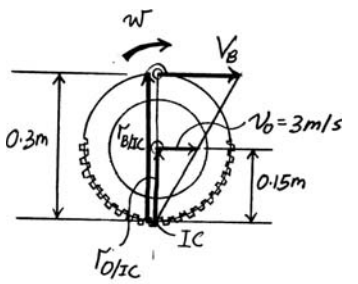

(a)

Reference Frame: The $x'y'z'$ rotating reference frame is attached to link AB and coincides with the XYZ fixed reference frame, Figs. c and d. Thus, $\mathbf{v}_B$ and $\mathbf{a}_B$ with respect to the XYZ frame is

$$\mathbf{v}_B = [6 \sin 30°\mathbf{i} - 6 \cos 30° \mathbf{j}] = [3\mathbf{i} - 5.196\mathbf{j}] \text{ m/s}$$

$$\mathbf{a}_B = (3 \sin 30° - 60 \cos 30°)\mathbf{i} + (-3 \cos 30° - 60 \sin 30°)\mathbf{j}$$

$$= [-50.46\mathbf{i} - 32.60\mathbf{j}] \text{ m/s}^2$$

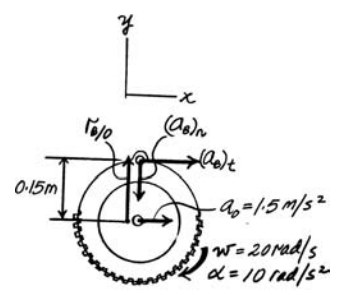

(b)

For motion of the $x'y'z'$ frame with reference to the XYZ reference frame,

$$\mathbf{v}_A = \mathbf{a}_A = \mathbf{0} \qquad \omega_{AB} = -\omega_{AB}\mathbf{k} \qquad \dot{\omega}_{AB} = -\alpha_{AB}\mathbf{k}$$

For the motion of point B with respect to the $x'y'z'$ frame is

$$\mathbf{r}_{B/A} = [0.6\mathbf{j}]\text{m} \qquad (\mathbf{v}_{\text{rel}})_{x'y'z'} = (v_{\text{rel}})_{x'y'z'}\mathbf{j} \qquad (\mathbf{a}_{\text{rel}})_{x'y'z'} = (a_{\text{rel}})_{x'y'z'}\mathbf{j}$$

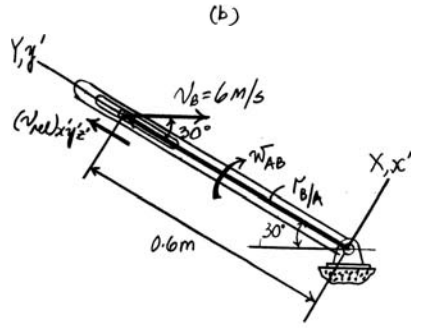

(c)

Velocity: Applying the relative velocity equation,

$$\mathbf{v}_B = \mathbf{v}_A + \omega_{AB} \times \mathbf{r}_{B/A} + (\mathbf{v}_{\text{rel}})_{x'y'z'}$$

$$3\mathbf{i} - 5.196\mathbf{j} = \mathbf{0} + (-\omega_{AB}\mathbf{k}) \times (0.6\mathbf{j}) + (v_{\text{rel}})_{x'y'z'}\mathbf{j}$$

$$3\mathbf{i} - 5.196\mathbf{j} = 0.6\omega_{AB}\mathbf{i} + (v_{\text{rel}})_{x'y'z'}\mathbf{j}$$

Equating the **i** and **j** components yields

$$3 = 0.6\omega_{AB} \qquad \omega_{AB} = 5 \text{ rad/s} \qquad \textbf{Ans.}$$

$$(v_{\text{rel}})_{x'y'z'} = -5.196 \text{ m/s}$$

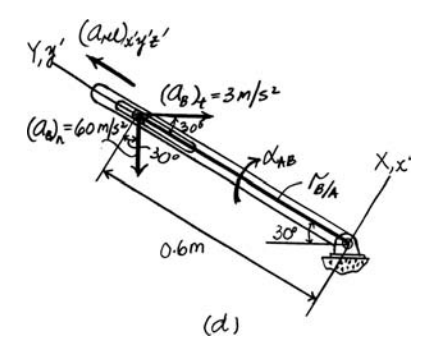

(d)

Acceleration: Applying the relative acceleration equation.

$$\mathbf{a}_B = \mathbf{a}_A + \dot{\omega}_{AB} \times \mathbf{r}_{B/A} + \omega_{AB} \times (\omega_{AB} \times \mathbf{r}_{B/A}) + 2\omega_{AB} \times (\mathbf{v}_{\text{rel}})_{x'y'z'} + (\mathbf{a}_{\text{rel}})_{x'y'z'}$$

$$-50.46\mathbf{i} - 32.60\mathbf{j} = \mathbf{0} + (-\alpha_{AB}\mathbf{k}) \times (0.6\mathbf{j}) + (-5\mathbf{k}) \times [(-5\mathbf{k}) \times (0.6\mathbf{j})] + 2(-5\mathbf{k}) \times (-5.196\mathbf{j}) + (a_{\text{rel}})_{x'y'z'}\mathbf{j}$$

$$-50.46\mathbf{i} - 32.60\mathbf{j} = (0.6\alpha_{AB} - 51.96)\mathbf{i} + \left[(a_{\text{rel}})_{x'y'z'} - 15\right]\mathbf{j}$$

Equating the **i** components,

$$-50.46 = 0.6\alpha_{AB} - 51.96$$

$$\alpha_{AB} = 2.5 \text{ rad/s}^2 \qquad \textbf{Ans.}$$

© 2010 Pearson Education, Inc., Upper Saddle River, NJ. All rights reserved. This material is protected under all copyright laws as they currently exist. No portion of this material may be reproduced, in any form or by any means, without permission in writing from the publisher.

16–150. At the instant shown, car A travels with a speed of 25 m/s, which is decreasing at a constant rate of $2\,\text{m/s}^2$, while car B travels with a speed of 15 m/s, which is increasing at a constant rate of $2\,\text{m/s}^2$. Determine the velocity and acceleration of car A with respect to car B.

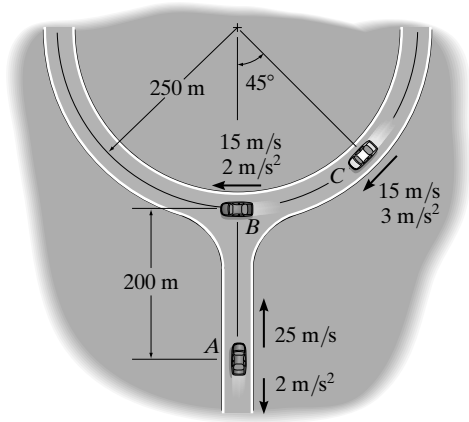

Reference Frames: The xyz rotating reference frame is attached to car B and coincides with the XYZ fixed reference frame at the instant considered, Fig. a. Since car B moves along the circular road, its normal component of acceleration is $(a_B)_n = \dfrac{{v_B}^2}{\rho} = \dfrac{15^2}{250} = 0.9\ \text{m/s}^2$. Thus, the motion of car B with respect to the XYZ frame is

$$\mathbf{v}_B = [-15\mathbf{i}]\ \text{m/s}$$

$$\mathbf{a}_B = [-2\mathbf{i} + 0.9\mathbf{j}]\ \text{m/s}^2$$

Also, the angular velocity and angular acceleration of the xyz frame with respect to the XYZ frame is

$$\omega = \frac{v_B}{\rho} = \frac{15}{250} = 0.06\ \text{rad/s} \qquad \omega = [-0.06\mathbf{k}]\ \text{rad/s}$$

$$\dot{\omega} = \frac{(a_B)_t}{\rho} = \frac{2}{250} = 0.008\ \text{rad/s}^2 \qquad \dot{\omega} = [-0.008\mathbf{k}]\ \text{rad/s}^2$$

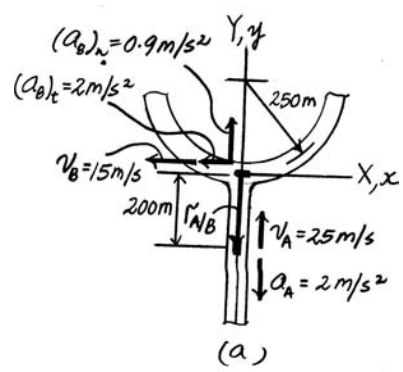

The velocity of car A with respect to the XYZ reference frame is

$$\mathbf{v}_A = [25\mathbf{j}]\ \text{m/s} \qquad \mathbf{a}_A = [-2\mathbf{j}]\ \text{m/s}^2$$

From the geometry shown in Fig. a,

$$\mathbf{r}_{A/B} = [-200\mathbf{j}]\ \text{m}$$

Velocity: Applying the relative velocity equation,

$$\mathbf{v}_A = \mathbf{v}_B + \omega \times \mathbf{r}_{A/B} + (\mathbf{v}_{\text{rel}})_{xyz}$$

$$25\mathbf{j} = -15\mathbf{i} + (-0.06\mathbf{k}) \times (-200\mathbf{j}) + (\mathbf{v}_{\text{rel}})_{xyz}$$

$$25\mathbf{j} = -27\mathbf{i} + (\mathbf{v}_{\text{rel}})_{xyz}$$

$$(\mathbf{v}_{\text{rel}})_{xyz} = [27\mathbf{i} + 25\mathbf{j}]\ \text{m/s} \qquad \textbf{Ans.}$$

Acceleration: Applying the relative acceleration equation,

$$\mathbf{a}_A = \mathbf{a}_B + \dot{\omega} \times \mathbf{r}_{A/B} + \omega \times (\omega \times \mathbf{r}_{A/B}) + 2\omega \times (\mathbf{v}_{\text{rel}})_{xyz} + (\mathbf{a}_{\text{rel}})_{xyz}$$

$$-2\mathbf{j} = (-2\mathbf{i} + 0.9\mathbf{j}) + (-0.008\mathbf{k}) \times (-200\mathbf{j}) + (-0.06\mathbf{k}) \times [(-0.06\mathbf{k}) \times (-200\mathbf{j})] + 2(-0.06\mathbf{k}) \times (27\mathbf{i} + 25\mathbf{j}) + (\mathbf{a}_{\text{rel}})_{xyz}$$

$$-2\mathbf{j} = -0.6\mathbf{i} - 1.62\mathbf{j} + (\mathbf{a}_{\text{rel}})_{xyz}$$

$$(\mathbf{a}_{\text{rel}})_{xyz} = [0.6\mathbf{i} - 0.38\mathbf{j}]\ \text{m/s}^2 \qquad \textbf{Ans.}$$

© 2010 Pearson Education, Inc., Upper Saddle River, NJ. All rights reserved. This material is protected under all copyright laws as they currently exist. No portion of this material may be reproduced, in any form or by any means, without permission in writing from the publisher.

16–151. At the instant shown, car A travels with a speed of 25 m/s, which is decreasing at a constant rate of 2 m/s^2, while car C travels with a speed of 15 m/s, which is increasing at a constant rate of 3 m/s^2. Determine the velocity and acceleration of car A with respect to car C.

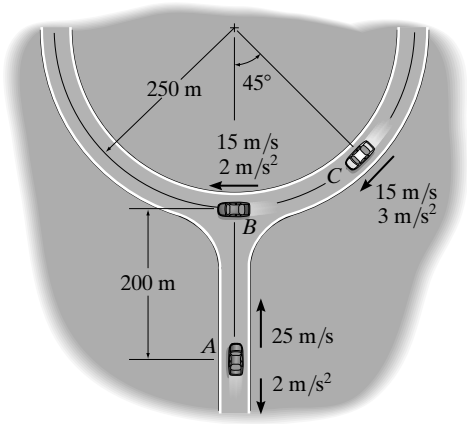

Reference Frame: The xyz rotating reference frame is attached to car C and coincides with the XYZ fixed reference frame at the instant considered, Fig. a. Since car C moves along the circular road, its normal component of acceleration is $(a_C)_n = \dfrac{v_C{}^2}{\rho} = \dfrac{15^2}{250} = 0.9\ \text{m/s}^2$. Thus, the motion of car C with respect to the XYZ frame is

$$\mathbf{v}_C = -15\cos 45°\mathbf{i} - 15\sin 45°\mathbf{j} = [-10.607\mathbf{i} - 10.607\mathbf{j}]\ \text{m/s}$$

$$\mathbf{a}_C = (-0.9\cos 45° - 3\cos 45°)\mathbf{i} + (0.9\sin 45° - 3\sin 45°)\mathbf{j} = [-2.758\mathbf{i} - 1.485\mathbf{j}]\ \text{m/s}^2$$

Also, the angular velocity and angular acceleration of the xyz reference frame is

$$\omega = \frac{v_C}{\rho} = \frac{15}{250} = 0.06\ \text{rad/s} \qquad \omega = [-0.06\mathbf{k}]\ \text{rad/s}$$

$$\dot{\omega} = \frac{(a_C)_t}{\rho} = \frac{3}{250} = 0.012\ \text{rad/s}^2 \qquad \dot{\omega} = [-0.012\mathbf{k}]\ \text{rad/s}^2$$

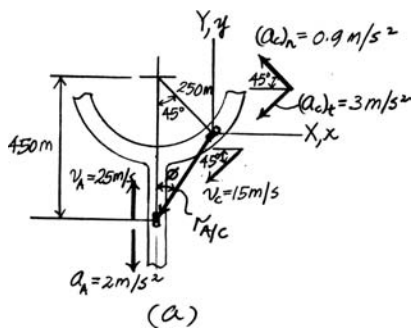

The velocity and accdeleration of car A with respect to the XYZ frame is

$$\mathbf{v}_A = [25\mathbf{j}]\ \text{m/s} \qquad \mathbf{a}_A = [-2\mathbf{j}]\ \text{m/s}^2$$

From the geometry shown in Fig. a,

$$\mathbf{r}_{A/C} = -250\sin 45°\mathbf{i} - (450 - 250\cos 45°)\mathbf{j} = [-176.78\mathbf{i} - 273.22\mathbf{j}]\ \text{m}$$

Velocity: Applying the relative velocity equation,

$$\mathbf{v}_A = \mathbf{v}_C + \omega \times \mathbf{r}_{A/C} + (\mathbf{v}_{\text{rel}})_{xyz}$$

$$25\mathbf{j} = (-10.607\mathbf{i} - 10.607\mathbf{j}) + (-0.06\mathbf{k}) \times (-176.78\mathbf{i} - 273.22\mathbf{j}) + (\mathbf{v}_{\text{rel}})_{xyz}$$

$$25\mathbf{j} = -27\mathbf{i} + (\mathbf{v}_{\text{rel}})_{xyz}$$

$$(\mathbf{v}_{\text{rel}})_{xyz} = [27\mathbf{i} + 25\mathbf{j}]\ \text{m/s} \qquad \textbf{Ans.}$$

Acceleration: Applying the relative acceleration equation,

$$\mathbf{a}_A = \mathbf{a}_C + \dot{\omega} \times r_{A/C} + \omega \times (\omega \times \mathbf{r}_{A/C}) + 2\omega \times (\mathbf{v}_{\text{rel}})_{xyz} + (\mathbf{a}_{\text{rel}})_{xyz}$$

$$-2\mathbf{j} = (-2.758\mathbf{i} - 1.485\mathbf{j}) + (-0.012\mathbf{k}) \times (-176.78\mathbf{i} - 273.22\mathbf{j})$$
$$+ (-0.06\mathbf{k}) \times [(-0.06\mathbf{k}) \times (-176.78\mathbf{i} - 273.22\mathbf{j})] + 2(-0.06\mathbf{k}) \times (27\mathbf{i} + 25\mathbf{j}) + (\mathbf{a}_{\text{rel}})_{xyz}$$

$$-2\mathbf{j} = -2.4\mathbf{i} - 1.62\mathbf{j} + (\mathbf{a}_{\text{rel}})_{xyz}$$

$$(\mathbf{a}_{\text{rel}})_{xyz} = [2.4\mathbf{i} - 0.38\mathbf{j}]\ \text{m/s}^2 \qquad \textbf{Ans.}$$

© 2010 Pearson Education, Inc., Upper Saddle River, NJ. All rights reserved. This material is protected under all copyright laws as they currently exist. No portion of this material may be reproduced, in any form or by any means, without permission in writing from the publisher.

***16–152.** At the instant shown, car B travels with a speed of 15 m/s, which is increasing at a constant rate of $2\,\text{m/s}^2$, while car C travels with a speed of 15 m/s, which is increasing at a constant rate of $3\,\text{m/s}^2$. Determine the velocity and acceleration of car B with respect to car C.

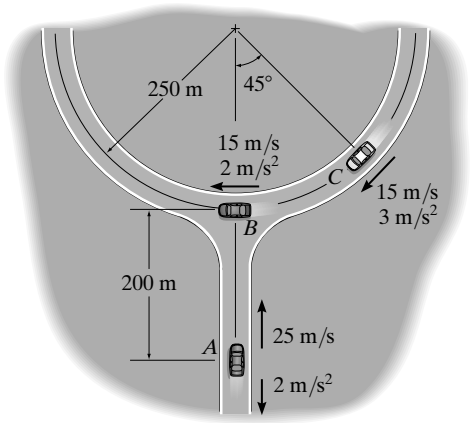

Reference Frame: The xyz rotating reference frame is attached to C and coincides with the XYZ fixed reference frame at the instant considered, Fig. a. Since B and C move along the circular road, their normal components of acceleration are $(a_B)_n = \dfrac{v_B{}^2}{\rho} = \dfrac{15^2}{250} = 0.9\ \text{m/s}^2$ and $(a_C)_n = \dfrac{v_C{}^2}{\rho} = \dfrac{15^2}{250} = 0.9\ \text{m/s}^2$. Thus, the motion of cars B and C with respect to the XYZ frame are

$$\mathbf{v}_B = [-15\mathbf{i}]\ \text{m/s}$$

$$\mathbf{v}_C = [-15\cos 45°\mathbf{i} - 15\sin 45°\mathbf{j}] = [-10.607\mathbf{i} - 10.607\mathbf{j}]\ \text{m/s}$$

$$\mathbf{a}_B = [-2\mathbf{i} + 0.9\mathbf{j}]\ \text{m/s}^2$$

$$\mathbf{a}_C = (-0.9\cos 45° - 3\cos 45°)\mathbf{i} + (0.9\sin 45° - 3\sin 45°)\mathbf{j} = [-2.758\mathbf{i} - 1.485\,\mathbf{j}]\ \text{m/s}^2$$

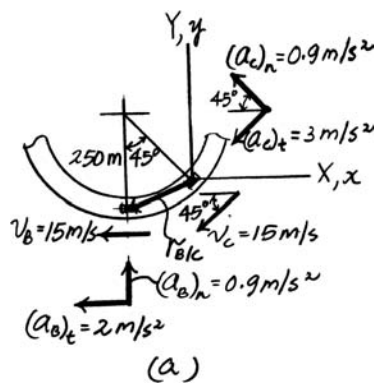

(a)

Also, the angular velocity and angular acceleration of the xyz reference frame with respect to the XYZ reference frame are

$$\omega = \frac{v_C}{\rho} = \frac{15}{250} = 0.06\ \text{rad/s} \qquad \boldsymbol{\omega} = [-0.06\mathbf{k}]\ \text{rad/s}$$

$$\dot{\omega} = \frac{(a_C)_t}{\rho} = \frac{3}{250} = 0.012\ \text{rad/s}^2 \qquad \dot{\boldsymbol{\omega}} = [-0.012\mathbf{k}]\ \text{rad/s}^2$$

From the geometry shown in Fig. a,

$$\mathbf{r}_{B/C} = -250\sin 45°\mathbf{i} - (250 - 250\cos 45°)\mathbf{j} = [-176.78\mathbf{i} - 73.22\,\mathbf{j}]\ \text{m}$$

Velocity: Applying the relative velocity equation,

$$\mathbf{v}_B = \mathbf{v}_C + \boldsymbol{\omega} \times r_{B/C} + (\mathbf{v}_{\text{rel}})_{xyz}$$

$$-15\mathbf{i} = (-10.607\mathbf{i} - 10.607\mathbf{j}) + (-0.06\mathbf{k}) \times (-176.78\mathbf{i} - 73.22\mathbf{j}) + (\mathbf{v}_{\text{rel}})_{xyz}$$

$$-15\mathbf{i} = -15\mathbf{i} + (\mathbf{v}_{\text{rel}})_{xyz}$$

$$(\mathbf{v}_{\text{rel}})_{xyz} = \mathbf{0} \qquad \textbf{Ans.}$$

Acceleration: Applying the relative acceleration equation,

$$\mathbf{a}_B = \mathbf{a}_C + \dot{\boldsymbol{\omega}} \times \mathbf{r}_{B/C} + \boldsymbol{\omega} \times (\boldsymbol{\omega} \times \mathbf{r}_{B/C}) + 2\boldsymbol{\omega} \times (\mathbf{v}_{\text{rel}})_{xyz} + (\mathbf{a}_{\text{rel}})_{xyz}$$

$$-2\mathbf{i} + 0.9\mathbf{j} = (-2.758\mathbf{i} - 1.485\mathbf{j}) + (-0.012\mathbf{k}) \times (-176.78\mathbf{i} - 73.22\mathbf{j})$$
$$+(-0.06\mathbf{k}) \times [(-0.06\mathbf{k}) \times (-176.78\mathbf{i} - 73.22\mathbf{j})] + 2(-0.06\mathbf{k}) \times \mathbf{0} + (\mathbf{a}_{\text{rel}})_{xyz}$$

$$-2\mathbf{i} + 0.9\mathbf{j} = -3\mathbf{i} + 0.9\mathbf{j} + (\mathbf{a}_{\text{rel}})_{xyz}$$

$$(a_{\text{rel}})_{xyz} = [1\mathbf{i}]\ \text{m/s}^2 \qquad \textbf{Ans.}$$

© 2010 Pearson Education, Inc., Upper Saddle River, NJ. All rights reserved. This material is protected under all copyright laws as they currently exist. No portion of this material may be reproduced, in any form or by any means, without permission in writing from the publisher.

•16–153. At the instant shown, boat A travels with a speed of 15 m/s, which is decreasing at 3 m/s^2, while boat B travels with a speed of 10 m/s, which is increasing at 2 m/s^2. Determine the velocity and acceleration of boat A with respect to boat B at this instant.

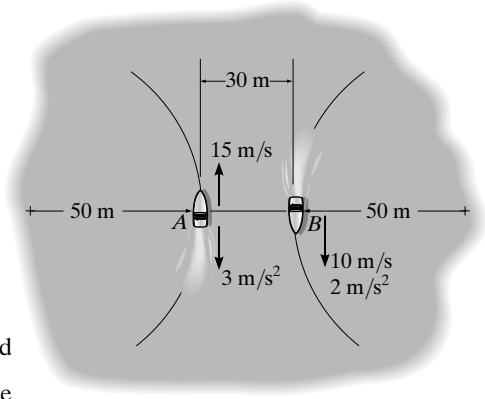

Reference Frame: The xyz rotating reference frame is attached to boat B and coincides with the XYZ fixed reference frame at the instant considered, Fig. a. Since boats A and B move along the circular paths, their normal components of acceleration are $(a_A)_n = \frac{v_A{}^2}{\rho} = \frac{15^2}{50} = 4.5 \text{ m/s}^2$ and $(a_B)_n = \frac{v_B{}^2}{\rho} = \frac{10^2}{50} = 2 \text{ m/s}^2$. Thus, the motion of boats A and B with respect to the XYZ frame are

$$\mathbf{v}_A = [15\mathbf{j}] \text{ m/s} \qquad \mathbf{v}_B = [-10\mathbf{j}] \text{ m/s}$$

$$\mathbf{a}_A = [-4.5\mathbf{i} - 3\mathbf{j}] \text{ m/s}^2 \qquad \mathbf{a}_B = [2\mathbf{i} - 2\mathbf{j}] \text{ m/s}^2$$

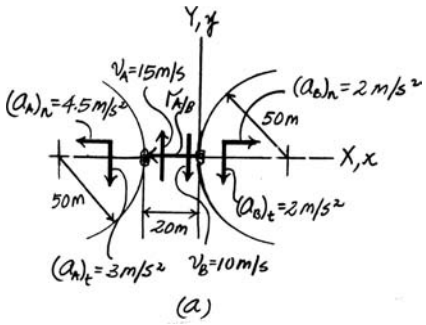

Also, the angular velocity and angular acceleration of the xyz reference frame with respect to the XYZ reference frame are

$$\omega = \frac{v_B}{\rho} = \frac{10}{50} = 0.2 \text{ rad/s} \qquad \omega = [0.2\mathbf{k}] \text{ rad/s}$$

$$\dot{\omega} = \frac{(a_B)_t}{\rho} = \frac{2}{50} = 0.04 \text{ rad/s}^2 \qquad \dot{\omega} = [0.04\mathbf{k}] \text{ rad/s}^2$$

And the position of boat A with respect to B is

$$\mathbf{r}_{A/B} = [-20\mathbf{i}] \text{ m}$$

Velocity: Applying the relative velocity equation,

$$\mathbf{v}_A = \mathbf{v}_B + \omega \times \mathbf{r}_{A/B} + (\mathbf{v}_{\text{rel}})_{xyz}$$

$$15\mathbf{j} = -10\mathbf{j} + (0.2\mathbf{k}) \times (-20\mathbf{i}) + (\mathbf{v}_{\text{rel}})_{xyz}$$

$$15\mathbf{j} = -14\mathbf{j} + (\mathbf{v}_{\text{rel}})_{xyz}$$

$$(\mathbf{v}_{\text{rel}})_{xyz} = [29\mathbf{j}] \text{ m/s} \qquad \textbf{Ans.}$$

Acceleration: Applying the relative acceleration equation,

$$\mathbf{a}_A = \mathbf{a}_B + \dot{\omega} \times \mathbf{r}_{A/B} + \omega \times (\omega \times \mathbf{r}_{A/B}) + 2\omega \times (\mathbf{v}_{\text{rel}})_{xyz} + (\mathbf{a}_{\text{rel}})_{xyz}$$

$$(-4.5\mathbf{i} - 3\mathbf{j}) = (2\mathbf{i} - 2\mathbf{j}) + (0.04\mathbf{k}) \times (-20\mathbf{i}) + (0.2\mathbf{k}) \times \left[(0.2\mathbf{k}) \times (-20\mathbf{i})\right] + 2(0.2\mathbf{k}) \times (29\mathbf{j}) + (\mathbf{a}_{\text{rel}})_{xyz}$$

$$-4.5\mathbf{i} - 3\mathbf{j} = -8.8\mathbf{i} - 2.8\mathbf{j} + (\mathbf{a}_{\text{rel}})_{xyz}$$

$$(\mathbf{a}_{\text{rel}})_{xyz} = [4.3\mathbf{i} - 0.2\mathbf{j}] \text{ m/s}^2 \qquad \textbf{Ans.}$$

© 2010 Pearson Education, Inc., Upper Saddle River, NJ. All rights reserved. This material is protected under all copyright laws as they currently exist. No portion of this material may be reproduced, in any form or by any means, without permission in writing from the publisher.

16–154. At the instant shown, boat A travels with a speed of 15 m/s, which is decreasing at 3 m/s^2, while boat B travels with a speed of 10 m/s, which is increasing at 2 m/s^2. Determine the velocity and acceleration of boat B with respect to boat A at this instant.

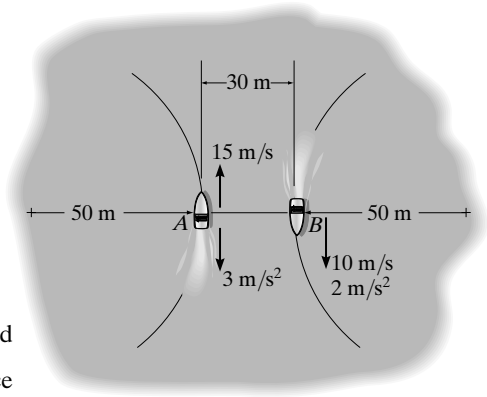

Reference Frame: The xyz rotating reference frame is attached to boat A and coincides with the XYZ fixed reference frame at the instant considered, Fig. a. Since boats A and B move along the circular paths, their normal components of acceleration are $(a_A)_n = \frac{v_A{}^2}{\rho} = \frac{15^2}{50} = 4.5\text{ m/s}^2$ and $(a_B)_n = \frac{v_B{}^2}{\rho} = \frac{10^2}{50} = 2\text{ m/s}^2$. Thus, the motion of boats A and B with respect to the XYZ frame are

$$\mathbf{v}_A = [15\mathbf{j}]\text{ m/s} \qquad \mathbf{v}_B = [-10\mathbf{j}]\text{ m/s}$$

$$\mathbf{a}_A = [-4.5\mathbf{i} - 3\mathbf{j}]\text{ m/s}^2 \qquad \mathbf{a}_B = [2\mathbf{i} - 2\mathbf{j}]\text{ m/s}^2$$

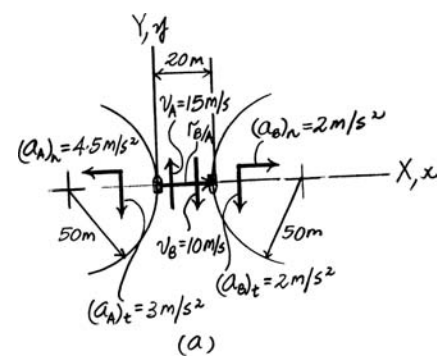

Also, the angular velocity and angular acceleration of the xyz reference frame with respect to the XYZ reference frame are

$$\omega = \frac{v_A}{\rho} = \frac{15}{50} = 0.3\text{ rad/s} \qquad \boldsymbol{\omega} = [0.3\mathbf{k}]\text{ rad/s}$$

$$\dot{\omega} = \frac{(a_A)_t}{\rho} = \frac{3}{50} = 0.06\text{ rad/s}^2 \qquad \dot{\boldsymbol{\omega}} = [-0.06\mathbf{k}]\text{ rad/s}^2$$

And the position of boat B with respect to boat A is

$$\mathbf{r}_{B/A} = [20\mathbf{i}]\text{ m}$$

Velocity: Applying the relative velocity equation,

$$\mathbf{v}_B = \mathbf{v}_A + \boldsymbol{\omega} \times \mathbf{r}_{B/A} + (\mathbf{v}_{\text{rel}})_{xyz}$$

$$-10\mathbf{j} = 15\mathbf{j} + (0.3\mathbf{k}) \times (20\mathbf{i}) + (\mathbf{v}_{\text{rel}})_{xyz}$$

$$-10\mathbf{j} = 21\mathbf{j} + (\mathbf{v}_{\text{rel}})_{xyz}$$

$$(\mathbf{v}_{\text{rel}})_{xyz} = [-31\mathbf{j}]\text{ m/s} \qquad \textbf{Ans.}$$

Acceleration: Applying the relative acceleration equation,

$$\mathbf{a}_B = \mathbf{a}_A + \dot{\boldsymbol{\omega}} \times \mathbf{r}_{B/A} + \boldsymbol{\omega}(\boldsymbol{\omega} \times \mathbf{r}_{B/A}) + 2\boldsymbol{\omega} \times (\mathbf{v}_{\text{rel}})_{xyz} + (\mathbf{a}_{\text{rel}})_{xyz}$$

$$(2\mathbf{i} - 2\mathbf{j}) = (-4.5\mathbf{i} - 3\mathbf{j}) + (-0.06\mathbf{k}) \times (20\mathbf{i}) + (0.3\mathbf{k}) \times \left[(0.3\mathbf{k}) \times (20\mathbf{i})\right] + 2(0.3\mathbf{k}) \times (-31\mathbf{j}) + (\mathbf{a}_{\text{rel}})_{xyz}$$

$$2\mathbf{i} - 2\mathbf{j} = 12.3\mathbf{i} - 4.2\mathbf{j} + (\mathbf{a}_{\text{rel}})_{xyz}$$

$$(\mathbf{a}_{\text{rel}})_{xyz} = [-10.3\mathbf{i} + 2.2\mathbf{j}]\text{ m/s}^2 \qquad \textbf{Ans.}$$

© 2010 Pearson Education, Inc., Upper Saddle River, NJ. All rights reserved. This material is protected under all copyright laws as they currently exist. No portion of this material may be reproduced, in any form or by any means, without permission in writing from the publisher.

16–155. Water leaves the impeller of the centrifugal pump with a velocity of 25 m/s and acceleration of 30 m/s^2, both measured relative to the impeller along the blade line AB. Determine the velocity and acceleration of a water particle at A as it leaves the impeller at the instant shown. The impeller rotates with a constant angular velocity of $\omega = 15$ rad/s.

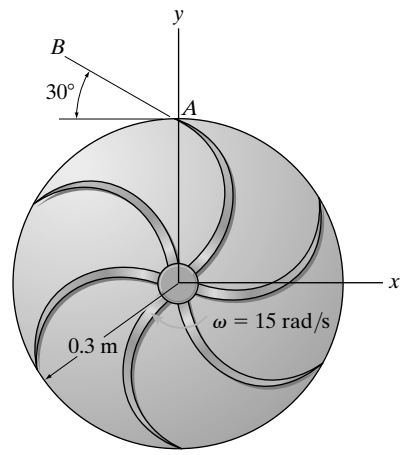

Reference Frame: The xyz rotating reference frame is attached to the impeller and coincides with the XYZ fixed reference frame at the instant considered, Fig. a. Thus, the motion of the xyz frame with respect to the XYZ frame is

$$\mathbf{v}_O = \mathbf{a}_O = \mathbf{0} \qquad \omega = [-15\mathbf{k}]\ \text{rad/s} \qquad \dot{\omega} = \mathbf{0}$$

The motion of point A with respect to the xyz frame is

$$\mathbf{r}_{A/O} = [0.3\mathbf{j}]\ \text{m}$$

$$(\mathbf{v}_{\text{rel}})_{xyz} = (-25\cos 30°\,\mathbf{i} + 25\sin 30°\,\mathbf{j}) = [-21.65\mathbf{i} + 12.5\mathbf{j}]\ \text{m/s}$$

$$(\mathbf{a}_{\text{rel}})_{xyz} = (-30\cos 30°\,\mathbf{i} + 30\sin 30°\,\mathbf{j}) = [-25.98\mathbf{i} + 15\mathbf{j}]\ \text{m/s}^2$$

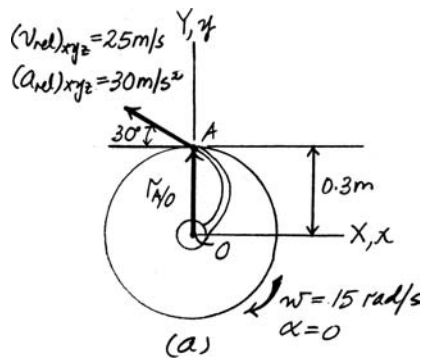

Velocity: Applying the relative velocity equation.

$$\mathbf{v}_A = \mathbf{v}_O + \omega \times \mathbf{r}_{A/O} + (\mathbf{v}_{\text{rel}})_{xyz}$$

$$= \mathbf{0} + (-15\mathbf{k}) \times (0.3\mathbf{j}) + (-21.65\mathbf{i} + 12.5\mathbf{j})$$

$$= [-17.2\mathbf{i} + 12.5\mathbf{j}]\ \text{m/s} \qquad \textbf{Ans.}$$

Acceleration: Applying the relative acceleration equation,

$$\mathbf{a}_A = \mathbf{a}_O + \dot{\omega} \times \mathbf{r}_{A/O} + \omega \times (\omega \times \mathbf{r}_{A/O}) + 2\omega \times (\mathbf{v}_{\text{rel}})_{xyz} + (\mathbf{a}_{\text{rel}})_{xyz}$$

$$= \mathbf{0} + (-15\mathbf{k}) \times [(-15\mathbf{k}) \times (0.3\mathbf{j})] + 2(-15\mathbf{k}) \times (-21.65\mathbf{i} + 12.5\mathbf{j}) + (-25.98\mathbf{i} + 15\mathbf{j})$$

$$= [349\mathbf{i} + 597\mathbf{j}]\ \text{m/s}^2 \qquad \textbf{Ans.}$$

© 2010 Pearson Education, Inc., Upper Saddle River, NJ. All rights reserved. This material is protected under all copyright laws as they currently exist. No portion of this material may be reproduced, in any form or by any means, without permission in writing from the publisher.

***16–156.** A ride in an amusement park consists of a rotating arm AB having a constant angular velocity $\omega_{AB} = 2$ rad/s about point A and a car mounted at the end of the arm which has a constant angular velocity $\boldsymbol{\omega}' = \{-0.5\mathbf{k}\}$ rad/s, measured relative to the arm. At the instant shown, determine the velocity and acceleration of the passenger at C.

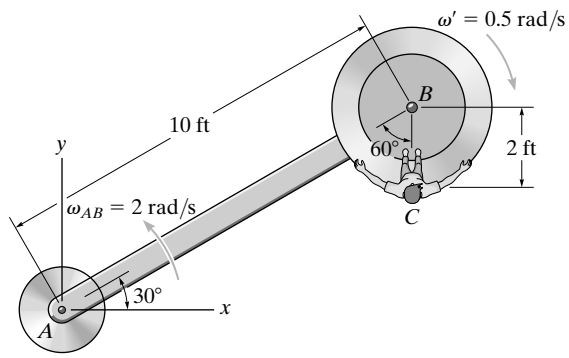

$\mathbf{r}_{B/A} = (10\cos 30°\mathbf{i} + 10\sin 30°\mathbf{j}) = \{8.66\mathbf{i} + 5\mathbf{j}\}$ ft

$\mathbf{v}_B = \omega_{AB} \times \mathbf{r}_{B/A} = 2\mathbf{k} \times (8.66\mathbf{i} + 5\mathbf{j}) = \{-10.0\mathbf{i} + 17.32\mathbf{j}\}$ ft/s

$\mathbf{a}_B = \alpha_{AB} \times \mathbf{r}_{B/A} - \omega_{AB}^2\,\mathbf{r}_{B/A}$

$= 0 - (2)^2(8.66\mathbf{i} + 5\mathbf{j}) = \{-34.64\mathbf{i} - 20\mathbf{j}\}$ ft/s^2

$\Omega = (2 - 0.5)\mathbf{k} = 1.5\mathbf{k}$

$\mathbf{v}_C = \mathbf{v}_B + \Omega \times \mathbf{r}_{C/B} + (\mathbf{v}_{C/B})_{xyz}$

$= -10.0\mathbf{i} + 17.32\mathbf{j} + 1.5\mathbf{k} \times (-2\mathbf{j}) + 0$

$= \{-7.00\mathbf{i} + 17.3\mathbf{j}\}$ ft/s **Ans.**

$\mathbf{a}_C = \mathbf{a}_B + \dot{\Omega} \times \mathbf{r}_{C/B} + \Omega \times (\Omega \times \mathbf{r}_{C/B}) + 2\Omega \times (\mathbf{v}_{C/B})_{xyz} + (\mathbf{a}_{C/B})_{xyz}$

$= -34.64\mathbf{i} - 20\mathbf{j} + 0 + (1.5\mathbf{k}) \times (1.5\mathbf{k}) \times (-2\mathbf{j}) + 0 + 0$

$= \{-34.6\mathbf{i} - 15.5\mathbf{j}\}$ ft/s^2 **Ans.**

•16–157. A ride in an amusement park consists of a rotating arm AB that has an angular acceleration of $\alpha_{AB} = 1$ rad/s^2 when $\omega_{AB} = 2$ rad/s at the instant shown. Also at this instant the car mounted at the end of the arm has an angular acceleration of $\boldsymbol{\alpha}' = \{-0.6\mathbf{k}\}$ rad/s^2 and angular velocity of $\boldsymbol{\omega}' = \{-0.5\mathbf{k}\}$ rad/s, measured relative to the arm. Determine the velocity and acceleration of the passenger C at this instant.

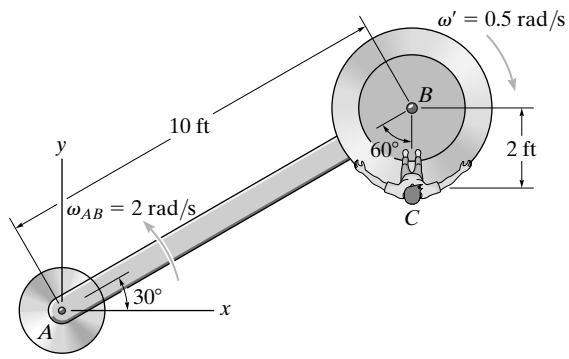

$\mathbf{r}_{B/A} = (10\cos 30°\mathbf{i} + 10\sin 30°\mathbf{j}) = \{8.66\mathbf{i} + 5\mathbf{j}\}$ ft

$\mathbf{v}_B = \omega_{AB} \times \mathbf{r}_{B/A} = 2\mathbf{k} \times (8.66\mathbf{i} + 5\mathbf{j}) = \{-10.0\mathbf{i} + 17.32\mathbf{j}\}$ ft/s

$\mathbf{a}_B = \alpha_{AB} \times \mathbf{r}_{B/A} - \omega_{AB}^2\,\mathbf{r}_{B/A}$

$= (1\mathbf{k}) \times (8.66\mathbf{i} + 5\mathbf{j}) - (2)^2(8.66\mathbf{i} + 5\mathbf{j}) = \{-39.64\mathbf{i} - 11.34\mathbf{j}\}$ ft/s^2

$\Omega = (2-0.5)\mathbf{k} = 1.5\mathbf{k}$

$\dot{\Omega} = (1 - 0.6)\mathbf{k} = 0.4\mathbf{k}$

$\mathbf{v}_C = \mathbf{v}_B + \Omega \times \mathbf{r}_{C/B} + (\mathbf{v}_{C/B})_{xyz}$

$= -10.0\mathbf{i} + 17.32\mathbf{j} + 1.5\mathbf{k} \times (-2\mathbf{j}) + 0$

$= \{-7.00\mathbf{i} + 17.3\mathbf{j}\}$ ft/s **Ans.**

$\mathbf{a}_C = \mathbf{a}_B + \dot{\Omega} \times \mathbf{r}_{C/B} + \Omega \times (\Omega \times \mathbf{r}_{C/B}) + 2\Omega \times (\mathbf{v}_{C/B})_{xyz} + (\mathbf{a}_{C/B})_{xyz}$

$= -39.64\mathbf{i} - 11.34\mathbf{j} + (0.4\mathbf{k}) \times (-2\mathbf{j}) + (1.5\mathbf{k}) \times (1.5\mathbf{k}) \times (-2\mathbf{j}) + 0 + 0$

$= \{-38.8\mathbf{i} - 6.84\mathbf{j}\}$ ft/s^2 **Ans.**

© 2010 Pearson Education, Inc., Upper Saddle River, NJ. All rights reserved. This material is protected under all copyright laws as they currently exist. No portion of this material may be reproduced, in any form or by any means, without permission in writing from the publisher.

16–158. The "quick-return" mechanism consists of a crank AB, slider block B, and slotted link CD. If the crank has the angular motion shown, determine the angular motion of the slotted link at this instant.

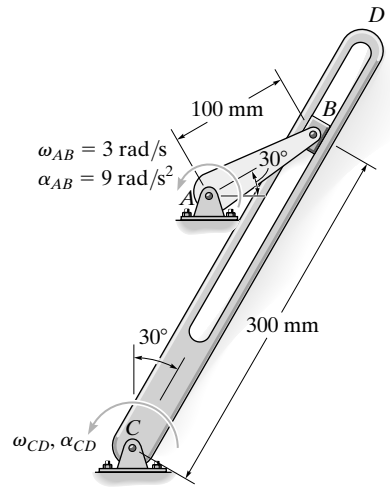

$v_B = 3(0.1) = 0.3$ m/s

$(a_B)_t = 9(0.1) = 0.9$ m/s^2

$(a_B)_n = (3)^2(0.1) = 0.9$ m/s^2

$\mathbf{v}_B = \mathbf{v}_C + \Omega \times \mathbf{r}_{B/C} + (\mathbf{v}_{B/C})_{xyz}$

$0.3\cos 60°\mathbf{i} + 0.3\sin 60°\mathbf{j} = \mathbf{0} + (\omega_{CD}\mathbf{k}) \times (0.3\mathbf{i}) + v_{B/C}\,\mathbf{i}$

$v_{B/C} = 0.15$ m/s

$\omega_{CD} = 0.866$ rad/s ↺ **Ans.**

$\mathbf{a}_B = \mathbf{a}_C + \dot{\Omega} \times \mathbf{r}_{B/C} + \Omega \times (\Omega \times \mathbf{r}_{B/C}) + 2\Omega \times (\mathbf{v}_{B/C})_{xyz} + (\mathbf{a}_{B/C})_{xyz}$

$0.9\cos 60°\mathbf{i} - 0.9\cos 30°\mathbf{i} + 0.9\sin 60°\mathbf{j} + 0.9\sin 30°\mathbf{j} = \mathbf{0} + (\alpha_{CD}\,\mathbf{k}) \times (0.3\mathbf{i})$

$+(0.866\mathbf{k}) \times (0.866\mathbf{k} \times 0.3\mathbf{i}) + 2(0.866\mathbf{k} \times 0.15\mathbf{i}) + a_{B/C}\,\mathbf{i}$

$-0.3294\mathbf{i} + 1.2294\mathbf{j} = 0.3\alpha_{CD}\mathbf{j} - 0.225\mathbf{i} + 0.2598\mathbf{j} + a_{B/C}\,\mathbf{i}$

$a_{B/C} = -0.104$ m/s^2

$\alpha_{CD} = 3.23$ rad/s^2 ↻ **Ans.**

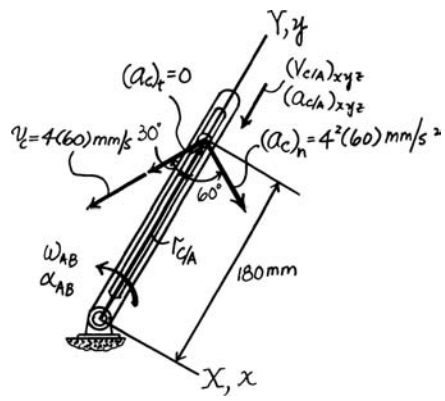

© 2010 Pearson Education, Inc., Upper Saddle River, NJ. All rights reserved. This material is protected under all copyright laws as they currently exist. No portion of this material may be reproduced, in any form or by any means, without permission in writing from the publisher.

16–159. The quick return mechanism consists of the crank CD and the slotted arm AB. If the crank rotates with the angular velocity and angular acceleration at the instant shown, determine the angular velocity and angular acceleration of AB at this instant.

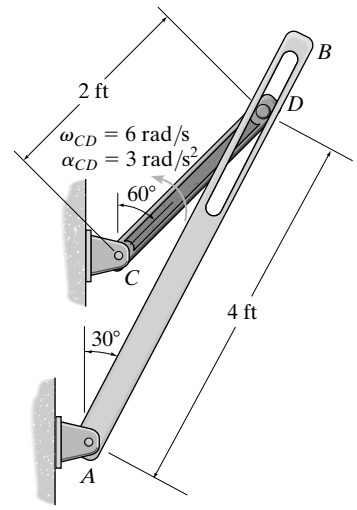

Reference Frame: The xyz rotating reference frame is attached to slotted arm AB and coincides with the XYZ fixed reference frame at the instant considered, Fig. a. Thus, the motion of the xyz reference frame with respect to the XYZ frame is

$$\mathbf{v}_A = a_A = \mathbf{0} \qquad \omega_{AB} = \omega_{AB}\mathbf{k} \qquad \dot{\omega}_{AB} = \alpha_{AB}\,\mathbf{k}$$

For the motion of point D with respect to the xyz frame, we have

$$\mathbf{r}_{D/A} = [4\mathbf{i}]\text{ ft} \qquad (\mathbf{v}_{\text{rel}})_{xyz} = (v_{\text{rel}})_{xyz}\mathbf{i} \qquad (\mathbf{a}_{\text{rel}})_{xyz} = (a_{\text{rel}})_{xyz}\,\mathbf{i}$$

Since the crank CD rotates about a fixed axis, $\mathbf{v}_D$ and $\mathbf{a}_D$ with respect to the XYZ reference frame can be determined from

$$\begin{aligned}
\mathbf{v}_D &= \omega_{CD} \times \mathbf{r}_D \\
&= (6\mathbf{k}) \times (2\cos 30°\,\mathbf{i} - 2\sin 30°\,\mathbf{j}) \\
&= [6\mathbf{i} + 10.39\mathbf{j}]\text{ ft/s} \\
\mathbf{a}_D &= \alpha_{CD} \times \mathbf{r}_D - \omega_{CD}{}^2\mathbf{r}_D \\
&= (3\mathbf{k}) \times (2\cos 30°\,\mathbf{i} - 2\sin 30°\,\mathbf{j}) - 6^2(2\cos 30°\,\mathbf{i} - 2\sin 30°\,\mathbf{j}) \\
&= [-59.35\mathbf{i} + 41.20\mathbf{j}]\text{ ft/s}^2
\end{aligned}$$

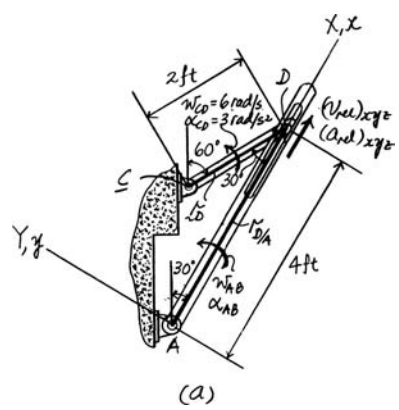

Velocity: Applying the relative velocity equation,

$$\begin{aligned}
\mathbf{v}_D &= \mathbf{v}_A + \omega_{AB} \times r_{D/A} + (\mathbf{v}_{\text{rel}})_{xyz} \\
6\mathbf{i} + 10.39\,\mathbf{j} &= \mathbf{0} + (\omega_{AB}\mathbf{k}) \times (4\mathbf{i}) + (v_{\text{rel}})_{xyz}\,\mathbf{i} \\
6\mathbf{i} + 10.39\mathbf{j} &= (v_{\text{rel}})_{xyz}\,\mathbf{i} + 4\omega_{AB}\,\mathbf{j}
\end{aligned}$$

Equating the **i** and **j** components yields

$$(v_{\text{rel}})_{xyz} = 6\text{ ft/s}$$

$$10.39 = 4\omega_{AB} \qquad \omega_{AB} = 2.598\text{ rad/s} = 2.60\text{ rad/s} \quad \textbf{Ans.}$$

Acceleration: Applying the relative acceleration equation,

$$\begin{aligned}
\mathbf{a}_D &= \mathbf{a}_A + \dot{\omega}_{AB} \times \mathbf{r}_{D/A} + \omega_{AB} \times (\omega_{AB} \times \mathbf{r}_{AB}) + 2\omega_{AB} \times (\mathbf{v}_{\text{rel}})_{xyz} + (\mathbf{a}_{\text{rel}})_{xyz} \\
-59.35\mathbf{i} + 41.20\,\mathbf{j} &= \mathbf{0} + (\alpha_{AB}\mathbf{k}) \times 4\mathbf{i} + 2.598\mathbf{k} \times [(2.598\mathbf{k}) \times (4\mathbf{i})] + 2(2.598\mathbf{k}) \times (6\mathbf{i}) + (\mathbf{a}_{\text{rel}})_{xyz}\,\mathbf{i} \\
-59.35\mathbf{i} + 41.20\,\mathbf{j} &= \Big[(a_{\text{rel}})_{xyz} - 27\Big]\mathbf{i} + (4\alpha_{AB} + 31.18)\mathbf{j}
\end{aligned}$$

Equating the **i** and **j** components yields

$$41.20 = 4\alpha_{AB} + 31.18$$

$$\alpha_{AB} = 2.50\text{ rad/s}^2 \qquad \textbf{Ans.}$$

© 2010 Pearson Education, Inc., Upper Saddle River, NJ. All rights reserved. This material is protected under all copyright laws as they currently exist. No portion of this material may be reproduced, in any form or by any means, without permission in writing from the publisher.

***16–160.** The Geneva mechanism is used in a packaging system to convert constant angular motion into intermittent angular motion. The star wheel A makes one sixth of a revolution for each full revolution of the driving wheel B and the attached guide C. To do this, pin P, which is attached to B, slides into one of the radial slots of A, thereby turning wheel A, and then exits the slot. If B has a constant angular velocity of $\omega_B = 4$ rad/s, determine $\boldsymbol{\omega}_A$ and $\boldsymbol{\alpha}_A$ of wheel A at the instant shown.

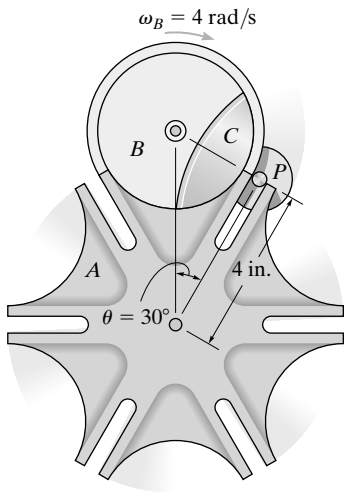

The circular path of motion of P has a radius of

$$r_P = 4 \tan 30° = 2.309 \text{ in.}$$

Thus,

$$\mathbf{v}_P = -4(2.309)\mathbf{j} = -9.238\mathbf{j}$$

$$\mathbf{a}_P = -(4)^2(2.309)\mathbf{i} = -36.95\mathbf{i}$$

Thus,

$$\mathbf{v}_P = \mathbf{v}_A + \Omega \times \mathbf{r}_{P/A} + (\mathbf{v}_{P/A})_{xyz}$$

$$-9.238\mathbf{j} = \mathbf{0} + (\omega_A \mathbf{k}) \times (4\mathbf{j}) - v_{P/A}\mathbf{j}$$

Solving,

$$\omega_A = 0 \qquad \textbf{Ans.}$$

$$v_{P/A} = 9.238 \text{ in./s}$$

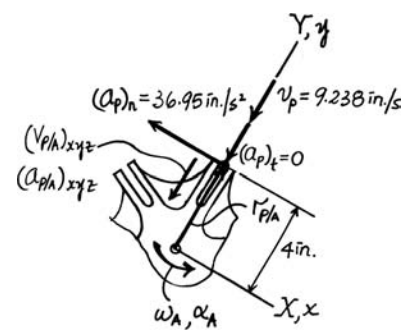

$$\mathbf{a}_P = \mathbf{a}_A + \dot{\Omega} \times \mathbf{r}_{P/A} + \Omega \times (\Omega \times \mathbf{r}_{P/A}) + 2\Omega \times (\mathbf{v}_{P/A})_{xyz} + (\mathbf{a}_{P/A})_{xyz}$$

$$-36.95\mathbf{i} = \mathbf{0} + (\alpha_A \mathbf{k}) \times (4\mathbf{j}) + \mathbf{0} + \mathbf{0} - a_{P/A}\mathbf{j}$$

Solving,

$$-36.95 = -4\alpha_A$$

$$\alpha_A = 9.24 \text{ rad/s}^2 \circlearrowleft \qquad \textbf{Ans.}$$

$$a_{P/A} = 0$$

© 2010 Pearson Education, Inc., Upper Saddle River, NJ. All rights reserved. This material is protected under all copyright laws as they currently exist. No portion of this material may be reproduced, in any form or by any means, without permission in writing from the publisher.

•17–1. Determine the moment of inertia I_y for the slender rod. The rod's density ρ and cross-sectional area A are constant. Express the result in terms of the rod's total mass m.

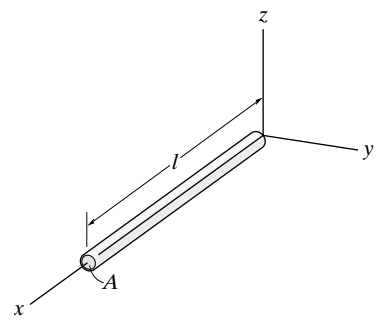

$$I_y = \int_M x^2\, dm$$

$$= \int_0^l x^2\,(\rho\, A\, dx)$$

$$= \frac{1}{3}\rho\, A\, l^3$$

$$m = \rho\, A\, l$$

Thus,

$$I_y = \frac{1}{3} m\, l^2$$ **Ans.**

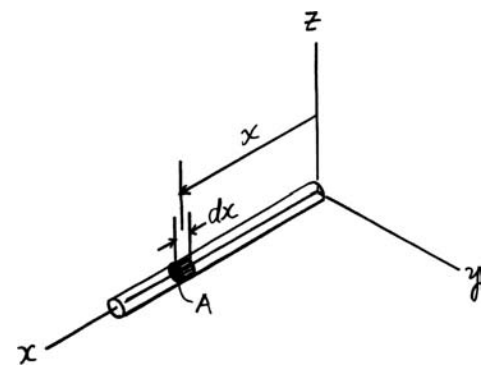

17–2. The right circular cone is formed by revolving the shaded area around the x axis. Determine the moment of inertia I_x and express the result in terms of the total mass m of the cone. The cone has a constant density ρ.

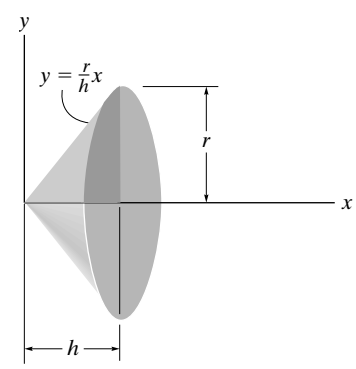

$$dm = \rho\, dV = \rho(\pi\, y^2\, dx)$$

$$m = \int_0^h \rho(\pi)\left(\frac{r^2}{h^2}\right)x^2\, dx = \rho\pi\left(\frac{r^2}{h^2}\right)\left(\frac{1}{3}\right)h^3 = \frac{1}{3}\rho\pi\, r^2 h$$

$$dI_x = \frac{1}{2}\, y^2\, dm$$

$$= \frac{1}{2}\, y^2\,(\rho\pi\, y^2\, dx)$$

$$= \frac{1}{2}\,\rho(\pi)\left(\frac{r^4}{h^4}\right)x^4\, dx$$

$$I_x = \int_0^h \frac{1}{2}\rho(\pi)\left(\frac{r^4}{h^4}\right)x^4\, dx = \frac{1}{10}\rho\pi\, r^4\, h$$

Thus,

$$I_x = \frac{3}{10}\, m\, r^2$$ **Ans.**

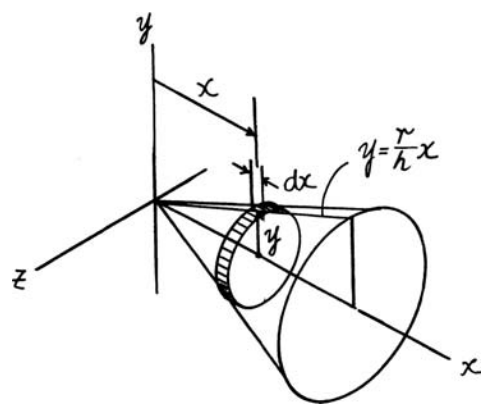

© 2010 Pearson Education, Inc., Upper Saddle River, NJ. All rights reserved. This material is protected under all copyright laws as they currently exist. No portion of this material may be reproduced, in any form or by any means, without permission in writing from the publisher.

17–3. The paraboloid is formed by revolving the shaded area around the x axis. Determine the radius of gyration k_x. The density of the material is $\rho = 5\ \text{Mg/m}^3$.

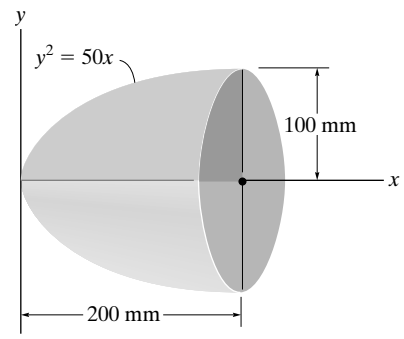

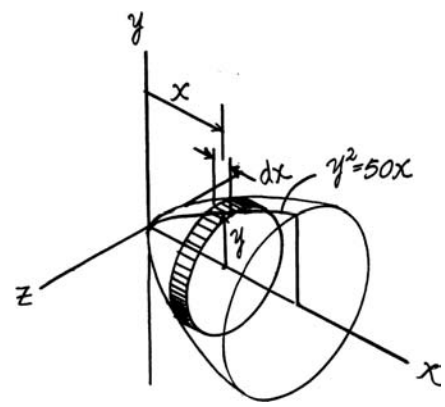

$$dm = \rho\,\pi\,y^2\,dx = \rho\,\pi\,(50x)\,dx$$

$$I_x = \int \frac{1}{2}\,y^2\,dm = \frac{1}{2}\int_0^{200} 50\,x\,\{\pi\,\rho\,(50x)\}\,dx$$

$$= \rho\,\pi\left(\frac{50^2}{2}\right)\left[\frac{1}{3}\,x^3\right]_0^{200}$$

$$= \rho\,\pi\left(\frac{50^2}{6}\right)(200)^3$$

$$m = \int dm = \int_0^{200} \pi\,\rho\,(50x)\,dx$$

$$= \rho\,\pi\,(50)\left[\frac{1}{2}\,x^2\right]_0^{200}$$

$$= \rho\,\pi\left(\frac{50}{2}\right)(200)^2$$

$$k_x = \sqrt{\frac{I_x}{m}} = \sqrt{\frac{50}{3}\,(200)} = 57.7\ \text{mm}$$ **Ans.**

***17–4.** The frustum is formed by rotating the shaded area around the x axis. Determine the moment of inertia I_x and express the result in terms of the total mass m of the frustum. The frustum has a constant density ρ.

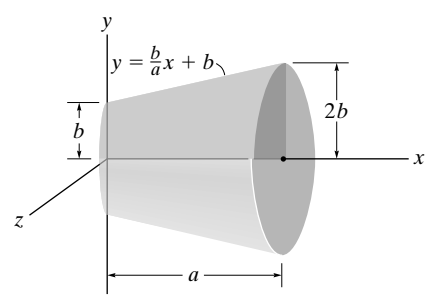

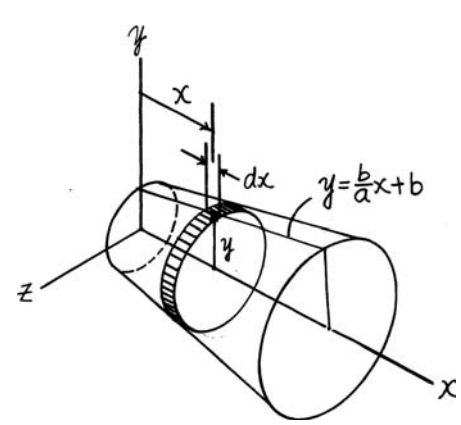

$$dm = \rho\,dV = \rho\pi y^2\,dx = \rho\pi\left(\frac{b^2}{a^2}x^2 + \frac{2b^2}{a}x + b^2\right)dx$$

$$dI_x = \frac{1}{2}dm y^2 = \frac{1}{2}\rho\pi y^4\,dx$$

$$dI_x = \frac{1}{2}\rho\pi\left(\frac{b^4}{a^4}x^4 + \frac{4\,b^4}{a^3}x^3 + \frac{6\,b^4}{a^2}x^2 + \frac{4b^4}{a}x + b^4\right)dx$$

$$I_x = \int dI_x = \frac{1}{2}\rho\pi\int_0^a\left(\frac{b^4}{a^4}x^4 + \frac{4b^4}{a^3}x^3 + \frac{6\,b^4}{a^2}x^2 + \frac{4\,b^4}{a}x + b^4\right)dx$$

$$= \frac{31}{10}\rho\pi a b^4$$

$$m = \int_m dm = \rho\pi\int_0^a\left(\frac{b^2}{a^2}x^2 + \frac{2b^2}{a}x + b^2\right)dx = \frac{7}{3}\rho\pi a b^2$$

$$I_x = \frac{93}{70}mb^2$$ **Ans.**

© 2010 Pearson Education, Inc., Upper Saddle River, NJ. All rights reserved. This material is protected under all copyright laws as they currently exist. No portion of this material may be reproduced, in any form or by any means, without permission in writing from the publisher.

•17–5. The paraboloid is formed by revolving the shaded area around the x axis. Determine the moment of inertia about the x axis and express the result in terms of the total mass m of the paraboloid. The material has a constant density ρ.

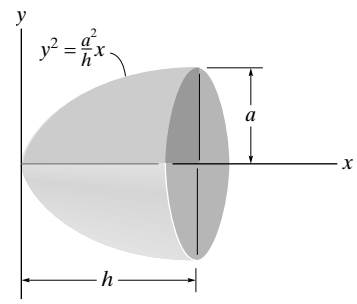

$$dm = \rho\, dV = \rho\,(\pi\, y^2\, dx)$$

$$d\,I_x = \frac{1}{2}\,dm\, y^2 = \frac{1}{2}\rho\,\pi\, y^4\, dx$$

$$I_x = \int_0^h \frac{1}{2}\rho\,\pi\left(\frac{a^4}{h^2}\right)x^2\, dx$$

$$= \frac{1}{6}\,\pi\,\rho a^4\, h$$

$$m = \int_0^h \frac{1}{2}\rho\,\pi\left(\frac{a^2}{h}\right)x\, dx$$

$$= \frac{1}{2}\,\rho\,\pi\, a^2\, h$$

$$I_x = \frac{1}{3}\,ma^2$$ **Ans.**

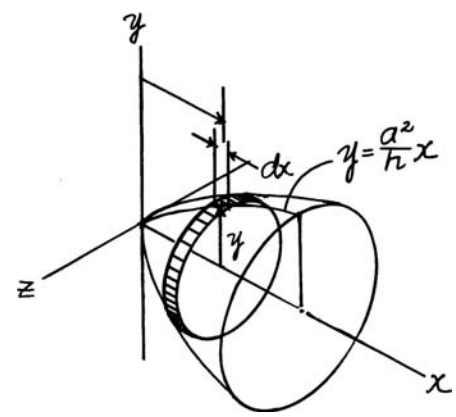

17–6. The hemisphere is formed by rotating the shaded area around the y axis. Determine the moment of inertia I_y and express the result in terms of the total mass m of the hemisphere. The material has a constant density ρ.

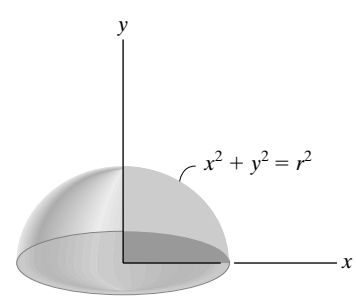

$$m = \int_V \rho\, dV = \rho\int_0^r \pi\, x^2\, dy = \rho\pi\int_0^r (r^2 - y^2)dy$$

$$= \rho\pi\left[r^2\, y - \frac{1}{3}\, y^3\right]_0^r = \frac{2}{3}\rho\pi\, r^3$$

$$I_y = \int_m \frac{1}{2}\,(dm)\, x^2 = \frac{\rho}{2}\int_0^r \pi x^4\, dy = \frac{\rho\pi}{2}\int_0^r (r^2 - y^2)^2\, dy$$

$$= \frac{\rho\pi}{2}\left[r^4 y - \frac{2}{3}\, r^2\, y^3 + \frac{y^5}{5}\right]_0^r = \frac{4\rho\pi}{15}\, r^5$$

Thus,

$$I_y = \frac{2}{5}\, m\, r^2$$ **Ans.**

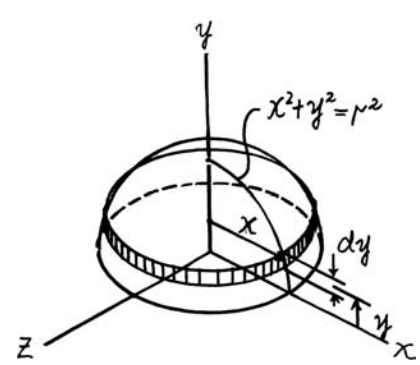

© 2010 Pearson Education, Inc., Upper Saddle River, NJ. All rights reserved. This material is protected under all copyright laws as they currently exist. No portion of this material may be reproduced, in any form or by any means, without permission in writing from the publisher.

17–7. Determine the moment of inertia of the homogeneous pyramid of mass m about the z axis. The density of the material is ρ. *Suggestion:* Use a rectangular plate element having a volume of $dV = (2x)(2y)dz$.

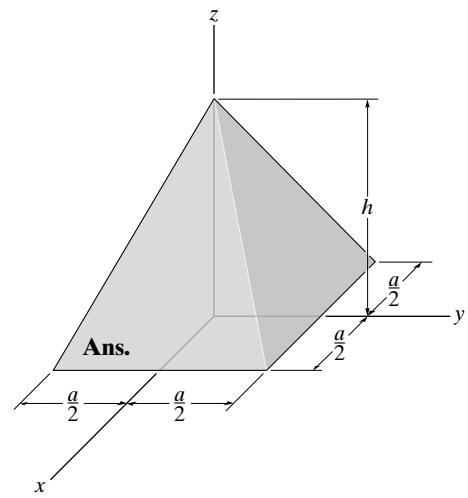

$$dI_z = \frac{dm}{12}\left[(2y)^2 + (2y)^2\right] = \frac{2}{3}y^2\,dm \quad I_z = \frac{m}{10}a^2$$

$$dm = 4\rho y^2\,dz$$

$$dI_z = \frac{8}{3}\rho y^4\,dz = \frac{8}{3}\rho(h - z)^4\left(\frac{a^4}{16h^4}\right)dz$$

$$I_z = \frac{\rho}{6}\left(\frac{a^4}{h^4}\right)\int_0^h (h^4 - 4h^3z + 6h^2z^2 - 4hz^3 + z^4)dz = \frac{\rho}{6}\left(\frac{a^4}{h^4}\right)\left[h^5 - 2h^5 + 2h^5 - h^5 + \frac{1}{5}h^5\right]$$

$$= \frac{\rho a^4 h}{30}$$

$$m = \int_0^h 4\rho(h - z)^2\left(\frac{a^2}{4h^2}\right)dz = \frac{\rho a^2}{h^2}\int_0^h (h^2 - 2hz + z^2)dz$$

$$= \frac{\rho a^2}{h^2}\left[h^3 - h^3 + \frac{1}{3}h^3\right]$$

$$= \frac{\rho a^2 h}{3}$$

Thus,

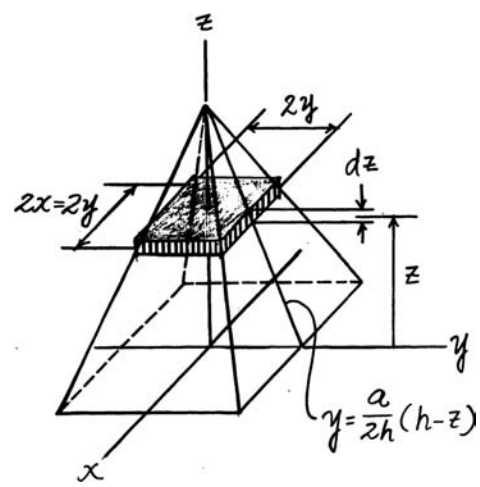

© 2010 Pearson Education, Inc., Upper Saddle River, NJ. All rights reserved. This material is protected under all copyright laws as they currently exist. No portion of this material may be reproduced, in any form or by any means, without permission in writing from the publisher.

***17–8.** Determine the mass moment of inertia I_z of the cone formed by revolving the shaded area around the z axis. The density of the material is ρ. Express the result in terms of the mass m of the cone.

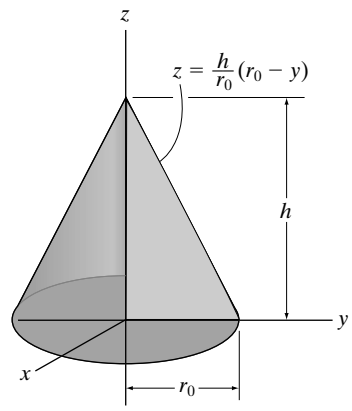

Differential Element: The mass of the disk element shown shaded in Fig. a is $dm = \rho\, dV = \rho\pi r^2 dz$. Here, $r = y = r_o - \frac{r_o}{h}z$. Thus, $dm = \rho\pi\left(r_o - \frac{r_o}{h}z\right)^2 dz$. The mass moment of inertia of this element about the z axis is

$$dI_z = \frac{1}{2}\,dmr^2 = \frac{1}{2}(\rho\pi r^2 dz)r^2 = \frac{1}{2}\rho\pi r^4 dz = \frac{1}{2}\rho\pi\left(r_o - \frac{r_o}{h}z\right)^4 dz$$

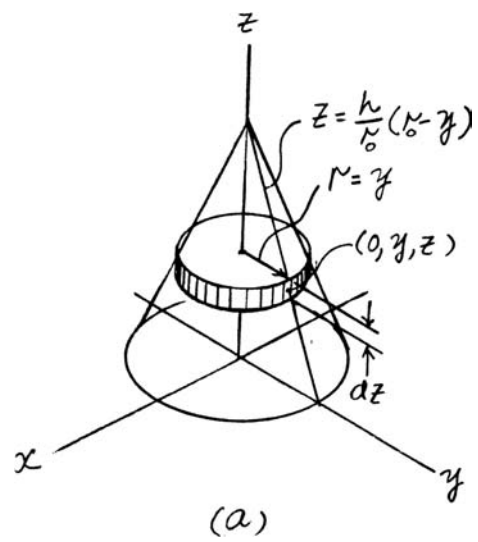

Mass: The mass of the cone can be determined by integrating dm. Thus,

$$m = \int dm = \int_0^h \rho\pi\left(r_o - \frac{r_o}{h}z\right)^2 dz$$

$$= \rho\pi\left[\frac{1}{3}\left(r_o - \frac{r_o}{h}z\right)^3\left(-\frac{h}{r_o}\right)\right]\Bigg|_0^h = \frac{1}{3}\rho\pi r_o{}^2 h$$

Mass Moment of Inertia: Integrating dI_z, we obtain

$$I_z = \int dI_z = \int_0^h \frac{1}{2}\rho\pi\left(r_o - \frac{r_o}{h}z\right)^4 dz$$

$$= \frac{1}{2}\rho\pi\left[\frac{1}{5}\left(r_o - \frac{r_o}{h}z\right)^3\left(-\frac{h}{r_o}\right)\right]\Bigg|_0^h = \frac{1}{10}\rho\pi r_o{}^4 h$$

From the result of the mass, we obtain $\rho\pi r_o{}^2 h = 3m$. Thus, I_z can be written as

$$I_z = \frac{1}{10}\left(\rho\pi r_o{}^2 h\right)r_o{}^2 = \frac{1}{10}(3m)r_o{}^2 = \frac{3}{10}mr_o{}^2 \qquad \textbf{Ans.}$$

© 2010 Pearson Education, Inc., Upper Saddle River, NJ. All rights reserved. This material is protected under all copyright laws as they currently exist. No portion of this material may be reproduced, in any form or by any means, without permission in writing from the publisher.

•17–9. Determine the mass moment of inertia I_y of the solid formed by revolving the shaded area around the y axis. The density of the material is ρ. Express the result in terms of the mass m of the solid.

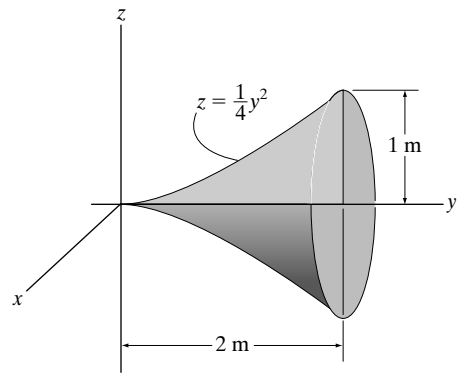

Differential Element: The mass of the disk element shown shaded in Fig. a is $dm = \rho\, dV = \rho\pi r^2 dy$. Here, $r = z = \frac{1}{4}y^2$. Thus, $dm = \rho\pi\left(\frac{1}{4}y^2\right)^2 dy = \frac{\rho\pi}{16}y^4\, dy$.

The mass moment of inertia of this element about the y axis is

$$dI_y = \frac{1}{2}dmr^2 = \frac{1}{2}(\rho\pi r^2 dy)r^2 = \frac{1}{2}\rho\pi r^4 dy = \frac{1}{2}\rho\pi\left(\frac{1}{4}y^2\right)^4 dy = \frac{\rho\pi}{512}y^8 dy$$

Mass: The mass of the solid can be determined by integrating dm. Thus,

$$m = \int dm = \int_0^{2\text{ m}} \frac{\rho\pi}{16}y^4 dy = \frac{\rho\pi}{16}\left(\frac{y^5}{5}\right)\Big|_0^{2\text{ m}} = \frac{2}{5}\rho\pi$$

Mass Moment of Inertia: Integrating dI_y, we obtain

$$I_y = \int dI_y = \int_0^{2\text{ m}} \frac{\rho\pi}{572}y^8 dy$$

$$= \frac{\rho\pi}{512}\left(\frac{y^9}{9}\right)\Big|_0^{2\text{ m}} = \frac{\pi\rho}{9}$$

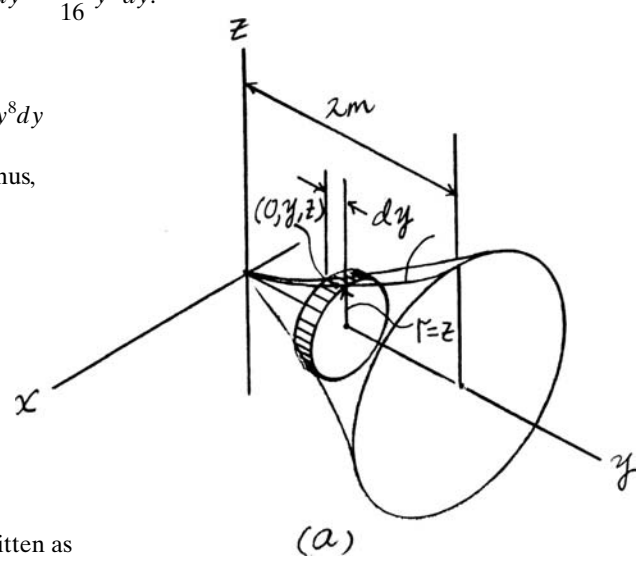

From the result of the mass, we obtain $\pi\rho = \frac{5m}{2}$. Thus, I_y can be written as

$$I_y = \frac{1}{9}\left(\frac{5m}{2}\right) = \frac{5}{18}m \qquad \textbf{Ans.}$$

© 2010 Pearson Education, Inc., Upper Saddle River, NJ. All rights reserved. This material is protected under all copyright laws as they currently exist. No portion of this material may be reproduced, in any form or by any means, without permission in writing from the publisher.

17–10. Determine the mass moment of inertia I_y of the solid formed by revolving the shaded area around the y axis. The density of the material is ρ. Express the result in terms of the mass m of the semi-ellipsoid.

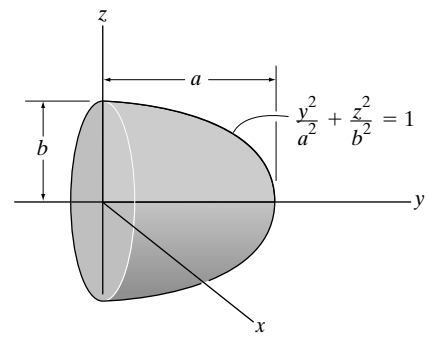

Differential Element: The mass of the disk element shown shaded in Fig. a is $dm = \rho\, dV = \rho\pi r^2 dy$. Here, $r = z = b\sqrt{1 - \frac{y^2}{a^2}}$. Thus, $dm = \rho\pi\left(b\sqrt{1 - \frac{y^2}{a^2}}\right)^2 dz$ $= \rho\pi b^2\left(1 - \frac{y^2}{a^2}\right)dy$. The mass moment of inertia of this element about the y axis is

$$dI_y = \frac{1}{2}\,dm r^2 = \frac{1}{2}(\rho\pi r^2 dy)r^2 = \frac{1}{2}\rho\pi r^4 dy = \frac{1}{2}\rho\pi\left(b\sqrt{1 - \frac{y^2}{a^2}}\right)^4 dy$$

$$= \frac{1}{2}\rho\pi b^4\left(1 - \frac{y^2}{a^2}\right)^2 dy = \frac{1}{2}\rho\pi b^4\left(1 + \frac{y^4}{a^4} - \frac{2y^2}{a^2}\right)dy$$

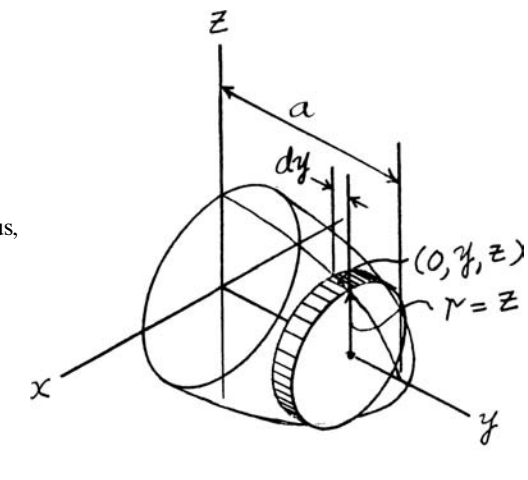

(a)

Mass: The mass of the semi-ellipsoid can be determined by integrating dm. Thus,

$$m = \int dm = \int_0^a \rho\pi b^2\left(1 - \frac{y^2}{a^2}\right)dy = \rho\pi b^2\left(y - \frac{y^3}{3a^2}\right)\Big|_0^a = \frac{2}{3}\rho\pi ab^2$$

Mass Moment of Inertia: Integrating dI_y, we obtain

$$I_y = \int dI_y = \int_0^a \frac{1}{2}\rho\pi b^4\left(H\frac{y^4}{a^4} - \frac{2y^2}{a^2}\right)dy$$

$$= \frac{1}{2}\rho\pi b^4\left(y + \frac{y^5}{5a^4} - \frac{2y^3}{3a^2}\right)\Big|_0^a = \frac{4}{15}\rho\pi ab^4$$

From the result of the mass, we obtain $\rho\pi ab^2 = \frac{3m}{2}$. Thus, I_y can be written as

$$I_y = \frac{4}{15}(\rho\pi ab^2)b^2 = \frac{4}{15}\left(\frac{3m}{2}\right)b^2 = \frac{2}{5}mb^2 \qquad \textbf{Ans.}$$

17–11. Determine the moment of inertia of the assembly about an axis that is perpendicular to the page and passes through the center of mass G. The material has a specific weight of $\gamma = 90\ \text{lb/ft}^3$.

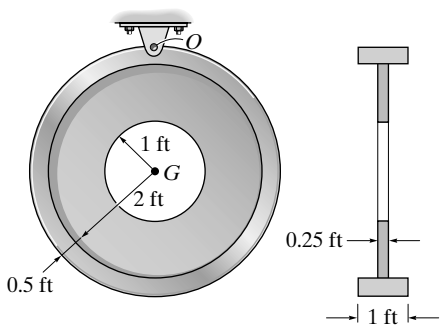

$$I_G = \frac{1}{2}\left[\left(\frac{90}{32.2}\right)\pi(2.5)^2(1)\right](2.5)^2 - \frac{1}{2}\left[\left(\frac{90}{32.2}\right)\pi(2)^2(1)\right](2)^2$$

$$+ \frac{1}{2}\left[\left(\frac{90}{32.2}\right)\pi(2)^2(0.25)\right](2)^2 - \frac{1}{2}\left[\left(\frac{90}{32.2}\right)\pi(1)^2(0.25)\right](1)^2$$

$$= 118\ \text{slug}\cdot\text{ft}^2 \qquad \textbf{Ans.}$$

© 2010 Pearson Education, Inc., Upper Saddle River, NJ. All rights reserved. This material is protected under all copyright laws as they currently exist. No portion of this material may be reproduced, in any form or by any means, without permission in writing from the publisher.

***17–12.** Determine the moment of inertia of the assembly about an axis that is perpendicular to the page and passes through point O. The material has a specific weight of $\gamma = 90\ \text{lb/ft}^3$.

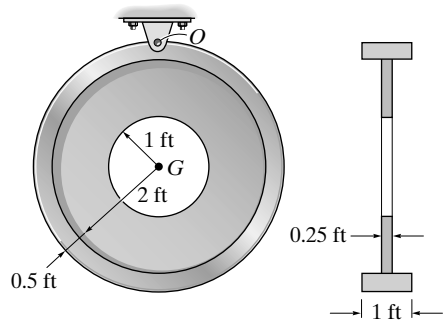

$$I_G = \frac{1}{2}\left[\left(\frac{90}{32.2}\right)\pi(2.5)^2(1)\right](2.5)^2 - \frac{1}{2}\left[\left(\frac{90}{32.2}\right)\pi(2)^2(1)\right](2)^2$$
$$+ \frac{1}{2}\left[\left(\frac{90}{32.2}\right)\pi(2)^2(0.25)\right](2)^2 - \frac{1}{2}\left[\left(\frac{90}{32.2}\right)\pi(1)^2(0.25)\right](1)^2$$
$$= 117.72\ \text{slug}\cdot\text{ft}^2$$

$$I_O = I_G + md^2$$

$$m = \left(\frac{90}{32.2}\right)\pi(2^2 - 1^2)(0.25) + \left(\frac{90}{32.2}\right)\pi(2.5^2 - 2^2)(1) = 26.343\ \text{slug}$$

$$I_O = 117.72 + 26.343(2.5)^2 = 282\ \text{slug}\cdot\text{ft}^2$$ **Ans.**

•17–13. If the large ring, small ring and each of the spokes weigh 100 lb, 15 lb, and 20 lb, respectively, determine the mass moment of inertia of the wheel about an axis perpendicular to the page and passing through point A.

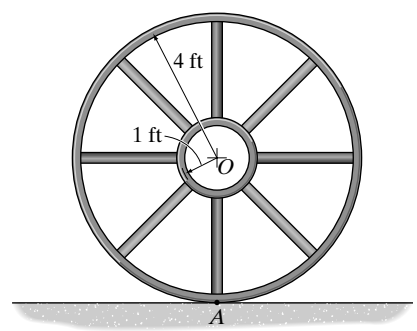

Composite Parts: The wheel can be subdivided into the segments shown in Fig. *a*. The spokes which have a length of $(4 - 1) = 3$ ft and a center of mass located at a distance of $\left(1 + \frac{3}{2}\right)$ ft $= 2.5$ ft from point O can be grouped as segment (2).

Mass Moment of Inertia: First, we will compute the mass moment of inertia of the wheel about an axis perpendicular to the page and passing through point O.

$$I_O = \left(\frac{100}{32.2}\right)(4^2) + 8\left[\frac{1}{12}\left(\frac{20}{32.2}\right)(3^2) + \left(\frac{20}{32.2}\right)(2.5^2)\right] + \left(\frac{15}{32.2}\right)(1^2)$$
$$= 84.94\ \text{slug}\cdot\text{ft}^2$$

The mass moment of inertia of the wheel about an axis perpendicular to the page and passing through point A can be found using the parallel-axis theorem $I_A = I_O + md^2$, where $m = \frac{100}{32.2} + 8\left(\frac{20}{32.2}\right) + \frac{15}{32.2} = 8.5404$ slug and $d = 4$ ft. Thus,

$$I_A = 84.94 + 8.5404(4^2) = 221.58\ \text{slug}\cdot\text{ft}^2 = 222\ \text{slug}\cdot\text{ft}^2$$ **Ans.**

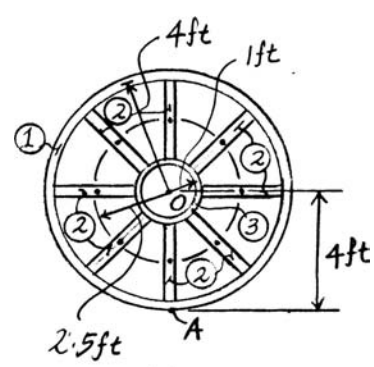

(a)

© 2010 Pearson Education, Inc., Upper Saddle River, NJ. All rights reserved. This material is protected under all copyright laws as they currently exist. No portion of this material may be reproduced, in any form or by any means, without permission in writing from the publisher.

17–14. The pendulum consists of the 3-kg slender rod and the 5-kg thin plate. Determine the location $\bar{y}$ of the center of mass G of the pendulum; then calculate the moment of inertia of the pendulum about an axis perpendicular to the page and passing through G.

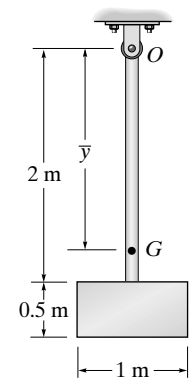

$$\bar{y} = \frac{\Sigma\, \bar{y}m}{\Sigma\, m} = \frac{1(3) + 2.25(5)}{3 + 5} = 1.781 \text{ m} = 1.78 \text{ m} \qquad \textbf{Ans.}$$

$$I_G = \Sigma \bar{I}_G + md^2$$

$$= \frac{1}{12}(3)(2)^2 + 3(1.781 - 1)^2 + \frac{1}{12}(5)(0.5^2 + 1^2) + 5(2.25 - 1.781)^2$$

$$= 4.45 \text{ kg} \cdot \text{m}^2 \qquad \textbf{Ans.}$$

17–15. Each of the three slender rods has a mass m. Determine the moment of inertia of the assembly about an axis that is perpendicular to the page and passes through the center point O.

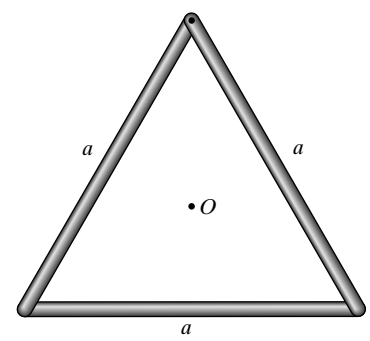

$$I_O = 3\left[\frac{1}{12}ma^2 + m\left(\frac{a \sin 60°}{3}\right)^2\right] = \frac{1}{2}ma^2 \qquad \textbf{Ans.}$$

***17–16.** The pendulum consists of a plate having a weight of 12 lb and a slender rod having a weight of 4 lb. Determine the radius of gyration of the pendulum about an axis perpendicular to the page and passing through point O.

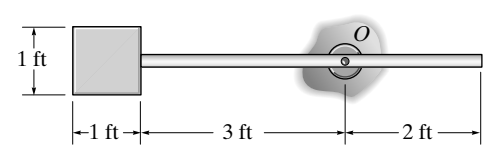

$$I_O = \Sigma I_G + md^2$$

$$= \frac{1}{12}\left(\frac{4}{32.2}\right)(5)^2 + \left(\frac{4}{32.2}\right)(0.5)^2 + \frac{1}{12}\left(\frac{12}{32.2}\right)(1^2 + 1^2) + \left(\frac{12}{32.2}\right)(3.5)^2$$

$$= 4.917 \text{ slug} \cdot \text{ft}^2$$

$$m = \left(\frac{4}{32.2}\right) + \left(\frac{12}{32.2}\right) = 0.4969 \text{ slug}$$

$$k_O = \sqrt{\frac{I_O}{m}} = \sqrt{\frac{4.917}{0.4969}} = 3.15 \text{ ft} \qquad \textbf{Ans.}$$

•17–17. Determine the moment of inertia of the solid steel assembly about the x axis. Steel has a specific weight of $\gamma_{st} = 490 \text{ lb/ft}^3$.

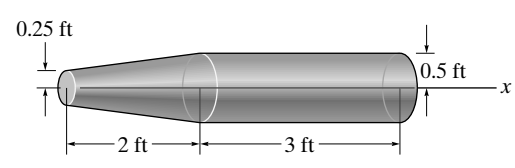

$$I_x = \frac{1}{2}m_1(0.5)^2 + \frac{3}{10}m_2(0.5)^2 - \frac{3}{10}m_3(0.25)^2$$

$$= \left[\frac{1}{2}\pi(0.5)^2(3)(0.5)^2 + \frac{3}{10}\left(\frac{1}{3}\right)\pi(0.5)^2(4)(0.5)^2 - \frac{3}{10}\left(\frac{1}{2}\right)\pi(0.25)^2(2)(0.25)^2\right]\left(\frac{490}{32.2}\right)$$

$$= 5.64 \text{ slug} \cdot \text{ft}^2 \qquad \textbf{Ans.}$$

© 2010 Pearson Education, Inc., Upper Saddle River, NJ. All rights reserved. This material is protected under all copyright laws as they currently exist. No portion of this material may be reproduced, in any form or by any means, without permission in writing from the publisher.

17–18. Determine the moment of inertia of the center crank about the x axis. The material is steel having a specific weight of $\gamma_{st} = 490\ \text{lb/ft}^3$.

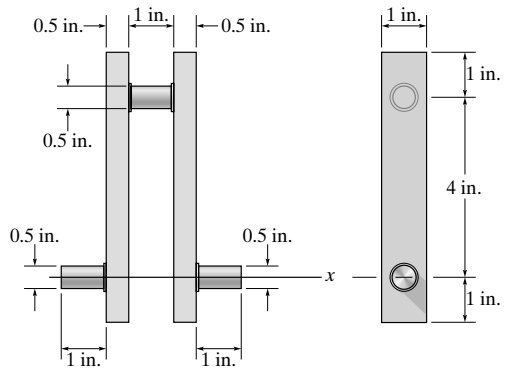

$$m_s = \frac{490}{32.2}\left(\frac{\pi\,(0.25)^2(1)}{(12)^3}\right) = 0.0017291\ \text{slug}$$

$$m_p = \frac{490}{32.2}\left(\frac{(6)(1)(0.5)}{(12)^3}\right) = 0.02642\ \text{slug}$$

$$I_x = 2\left[\frac{1}{12}(0.02642)\left((1)^2 + (6)^2\right) + (0.02642)(2)^2\right]$$

$$+ 2\left[\frac{1}{2}(0.0017291)(0.25)^2\right] + \frac{1}{2}(0.0017291)(0.25)^2 + (0.0017291)(4)^2\Big]$$

$$= 0.402\ \text{slug}\cdot\text{in}^2$$ **Ans.**

17–19. Determine the moment of inertia of the overhung crank about the x axis. The material is steel for which the density is $\rho = 7.85\ \text{Mg/m}^3$.

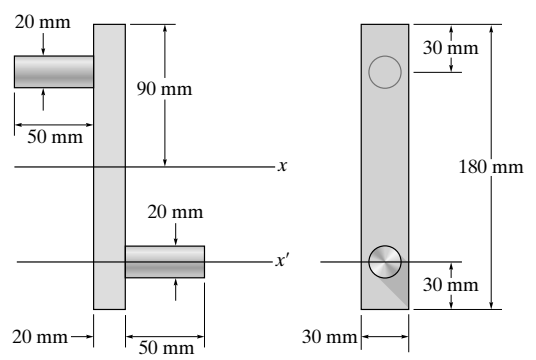

$$m_c = 7.85\left(10^3\right)\left((0.05)\pi(0.01)^2\right) = 0.1233\ \text{kg}$$

$$m_p = 7.85\left(10^3\right)((0.03)(0.180)(0.02)) = 0.8478\ \text{kg}$$

$$I_x = 2\left[\frac{1}{2}(0.1233)(0.01)^2 + (0.1233)(0.06)^2\right]$$

$$+ \left[\frac{1}{12}(0.8478)\left((0.03)^2 + (0.180)^2\right)\right]$$

$$= 0.00325\ \text{kg}\cdot\text{m}^2 = 3.25\ \text{g}\cdot\text{m}^2$$ **Ans.**

***17–20.** Determine the moment of inertia of the overhung crank about the x' axis. The material is steel for which the density is $\rho = 7.85\ \text{Mg/m}^3$.

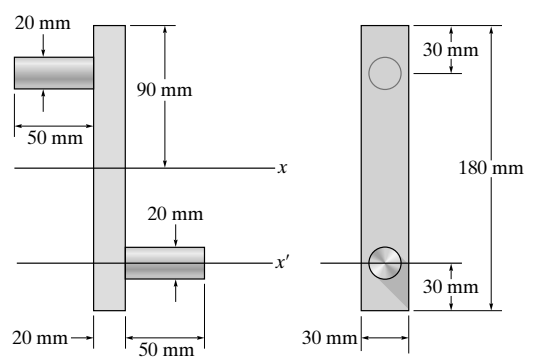

$$m_c = 7.85\left(10^3\right)\left((0.05)\pi(0.01)^2\right) = 0.1233\ \text{kg}$$

$$m_p = 7.85\left(10^3\right)((0.03)(0.180)(0.02)) = 0.8478\ \text{kg}$$

$$I_x = \left[\frac{1}{2}(0.1233)(0.01)^2\right] + \left[\frac{1}{2}(0.1233)(0.02)^2 + (0.1233)(0.120)^2\right]$$

$$+ \left[\frac{1}{12}(0.8478)\left((0.03)^2 + (0.180)^2\right) + (0.8478)(0.06)^2\right]$$

$$= 0.00719\ \text{kg}\cdot\text{m}^2 = 7.19\ \text{g}\cdot\text{m}^2$$ **Ans.**

© 2010 Pearson Education, Inc., Upper Saddle River, NJ. All rights reserved. This material is protected under all copyright laws as they currently exist. No portion of this material may be reproduced, in any form or by any means, without permission in writing from the publisher.

•17–21. Determine the mass moment of inertia of the pendulum about an axis perpendicular to the page and passing through point O. The slender rod has a mass of 10 kg and the sphere has a mass of 15 kg.

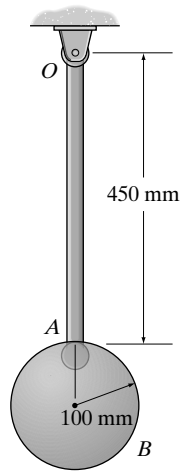

Composite Parts: The pendulum can be subdivided into two segments as shown in Fig. *a*. The perpendicular distances measured from the center of mass of each segment to the point O are also indicated.

Moment of Inertia: The moment of inertia of the slender rod segment (1) and the sphere segment (2) about the axis passing through their center of mass can be computed from $(I_G)_1 = \frac{1}{12}ml^2$ and $(I_G)_2 = \frac{2}{5}mr^2$. The mass moment of inertia of each segment about an axis passing through point O can be determined using the parallel-axis theorem.

$$I_O = \Sigma I_G + md^2$$

$$= \left[\frac{1}{12}(10)(0.45^2) + 10(0.225^2)\right] + \left[\frac{2}{5}(15)(0.1^2) + 15(0.55^2)\right]$$

$$= 5.27\ \text{kg}\cdot\text{m}^2 \qquad \textbf{Ans.}$$

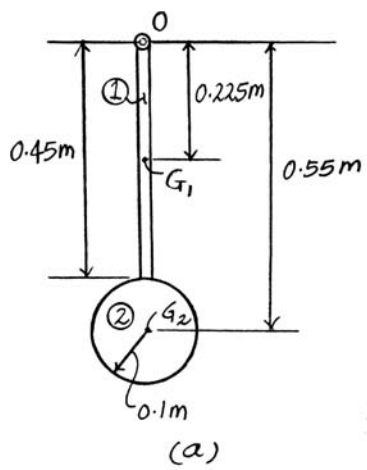

© 2010 Pearson Education, Inc., Upper Saddle River, NJ. All rights reserved. This material is protected under all copyright laws as they currently exist. No portion of this material may be reproduced, in any form or by any means, without permission in writing from the publisher.

17–22. Determine the mass moment of inertia of the thin plate about an axis perpendicular to the page and passing through point O. The material has a mass per unit area of $20\ \text{kg/m}^2$.

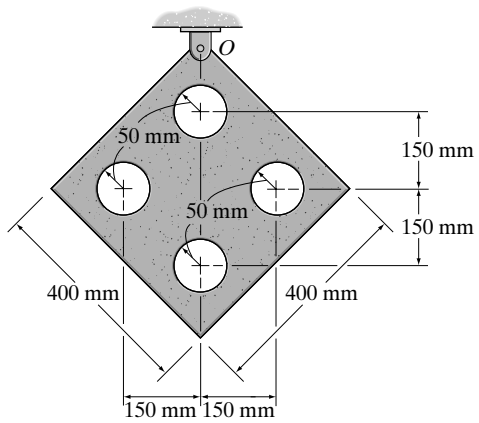

Composite Parts: The plate can be subdivided into the segments shown in Fig. *a*. Here, the four similar holes of which the perpendicular distances measured from their centers of mass to point C are the same and can be grouped as segment (2). This segment should be considered as a negative part.

Mass Moment of Inertia: The mass of segments (1) and (2) are $m_1 = (0.4)(0.4)(20) = 3.2\ \text{kg}$ and $m_2 = \pi(0.05^2)(20) = 0.05\pi\ \text{kg}$, respectively. The mass moment of inertia of the plate about an axis perpendicular to the page and passing through point C is

$$I_C = \frac{1}{12}(3.2)(0.4^2 + 0.4^2) - 4\left[\frac{1}{2}(0.05\pi)(0.05^2) + 0.05\pi(0.15^2)\right]$$
$$= 0.07041\ \text{kg}\cdot\text{m}^2$$

The mass moment of inertia of the wheel about an axis perpendicular to the page and passing through point O can be determined using the parallel-axis theorem $I_O = I_C + md^2$, where $m = m_1 - m_2 = 3.2 - 4(0.05\pi) = 2.5717\ \text{kg}$ and $d = 0.4 \sin 45°m$. Thus,

$$I_O = 0.07041 + 2.5717(0.4 \sin 45°)^2 = 0.276\ \text{kg}\cdot\text{m}^2 \qquad \textbf{Ans.}$$

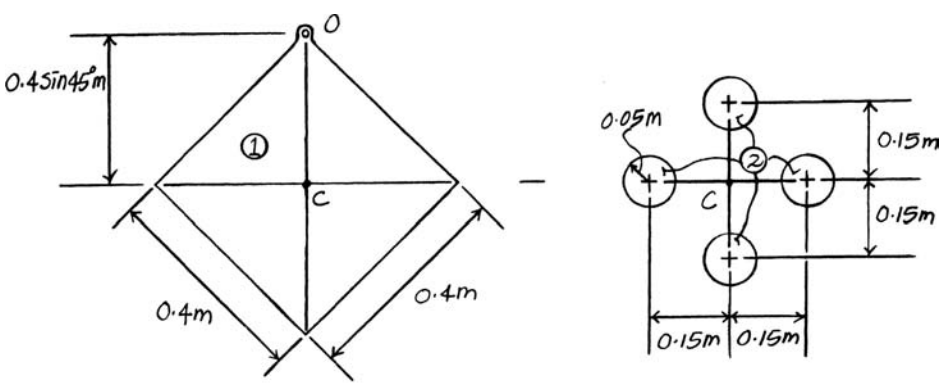

(a)

© 2010 Pearson Education, Inc., Upper Saddle River, NJ. All rights reserved. This material is protected under all copyright laws as they currently exist. No portion of this material may be reproduced, in any form or by any means, without permission in writing from the publisher.

17–23. Determine the mass moment of inertia of the thin plate about an axis perpendicular to the page and passing through point O. The material has a mass per unit area of $20\ \text{kg/m}^2$.

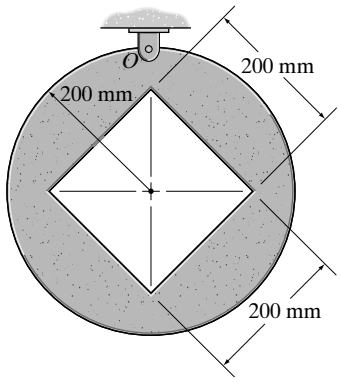

Composite Parts: The plate can be subdivided into two segments as shown in Fig. *a*. Since segment (2) is a hole, it should be considered as a negative part. The perpendicular distances measured from the center of mass of each segment to the point O are also indicated.

Mass Moment of Inertia: The moment of inertia of segments (1) and (2) are computed as $m_1 = \pi(0.2^2)(20) = 0.8\pi$ kg and $m_2 = (0.2)(0.2)(20) = 0.8$ kg. The moment of inertia of the plate about an axis perpendicular to the page and passing through point O for each segment can be determined using the parallel-axis theorem.

$$I_O = \Sigma I_G + md^2$$

$$= \left[\frac{1}{2}(0.8\pi)(0.2^2) + 0.8\pi(0.2^2)\right] - \left[\frac{1}{12}(0.8)(0.2^2 + 0.2^2) + 0.8(0.2^2)\right]$$

$$= 0.113\ \text{kg}\cdot\text{m}^2 \qquad \textbf{Ans.}$$

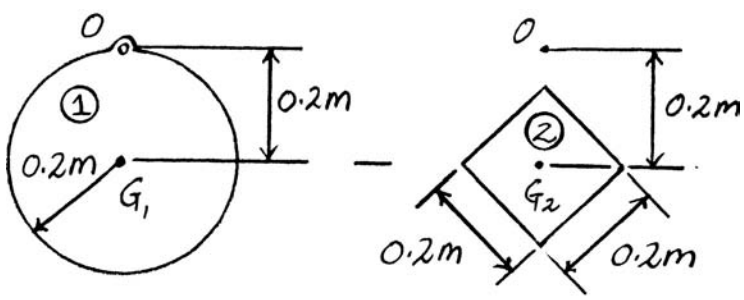

(a)

© 2010 Pearson Education, Inc., Upper Saddle River, NJ. All rights reserved. This material is protected under all copyright laws as they currently exist. No portion of this material may be reproduced, in any form or by any means, without permission in writing from the publisher.

***17–24.** The 4-Mg uniform canister contains nuclear waste material encased in concrete. If the mass of the spreader beam BD is 50 kg, determine the force in each of the links AB, CD, EF, and GH when the system is lifted with an acceleration of $a = 2\ \text{m/s}^2$ for a short period of time.

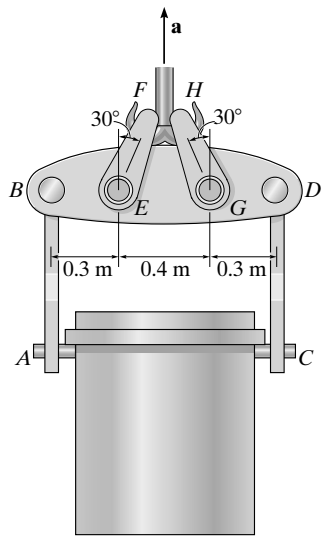

Canister:

$+\uparrow \Sigma F_y = m(a_G)_y;\qquad 2T - 4\left(10^3\right)(9.81) = 4\left(10^3\right)(2)$

$T_{AB} = T_{CD} = T = 23.6\ \text{kN}$ **Ans.**

System:

$+\uparrow \Sigma F_y = m(a_G)_y;\qquad 2T' \cos 30° - 4050(9.81) = 4050(2)$

$T_{EF} = T_{GH} = T' = 27.6\ \text{kN}$ **Ans.**

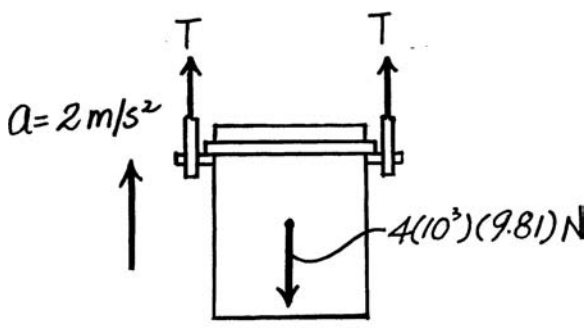

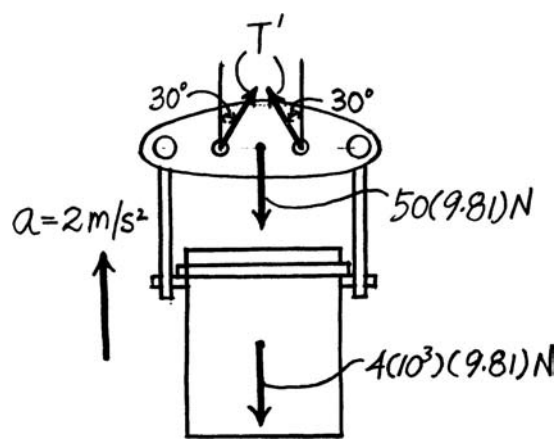

© 2010 Pearson Education, Inc., Upper Saddle River, NJ. All rights reserved. This material is protected under all copyright laws as they currently exist. No portion of this material may be reproduced, in any form or by any means, without permission in writing from the publisher.

•17–25. The 4-Mg uniform canister contains nuclear waste material encased in concrete. If the mass of the spreader beam *BD* is 50 kg, determine the largest vertical acceleration **a** of the system so that each of the links *AB* and *CD* are not subjected to a force greater than 30 kN and links *EF* and *GH* are not subjected to a force greater than 34 kN.

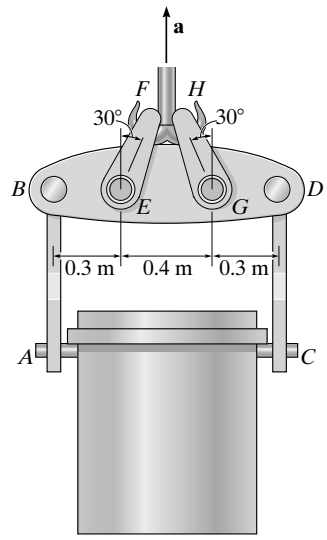

Canister:

$$+\uparrow \Sigma F_y = m(a_G)_y; \qquad 2(30)\left(10^3\right) - 4\left(10^3\right)(9.81) = 4\left(10^3\right)a$$

$$a = 5.19 \text{ m/s}^2$$

System:

$$+\uparrow \Sigma F_y = m(a_G)_y; \qquad 2\left[34\left(10^3\right)\cos 30^\circ\right] - 4050(9.81) = 4050a$$

$$a = 4.73 \text{ m/s}^2$$

Thus,

$$a_{\max} = 4.73 \text{ m/s}^2 \qquad \textbf{Ans.}$$

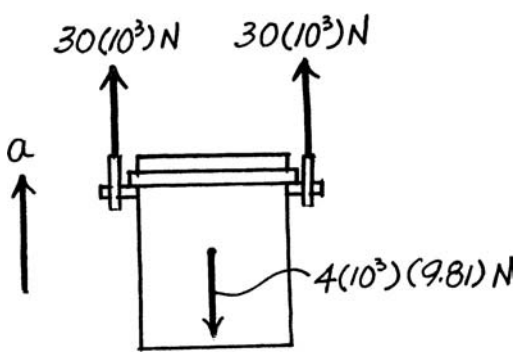

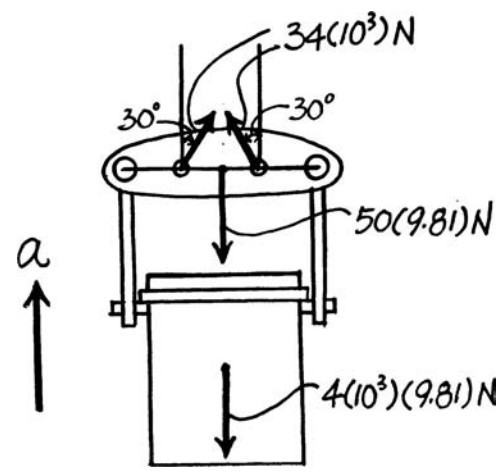

© 2010 Pearson Education, Inc., Upper Saddle River, NJ. All rights reserved. This material is protected under all copyright laws as they currently exist. No portion of this material may be reproduced, in any form or by any means, without permission in writing from the publisher.

17–26. The dragster has a mass of 1200 kg and a center of mass at G. If a braking parachute is attached at C and provides a horizontal braking force of $F = (1.6v^2)$ N, where v is in meters per second, determine the critical speed the dragster can have upon releasing the parachute, such that the wheels at B are on the verge of leaving the ground; i.e., the normal reaction at B is zero. If such a condition occurs, determine the dragster's initial deceleration. Neglect the mass of the wheels and assume the engine is disengaged so that the wheels are free to roll.

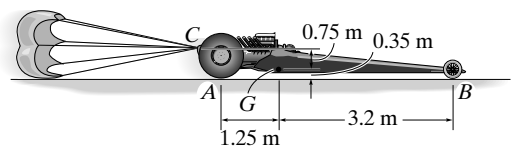

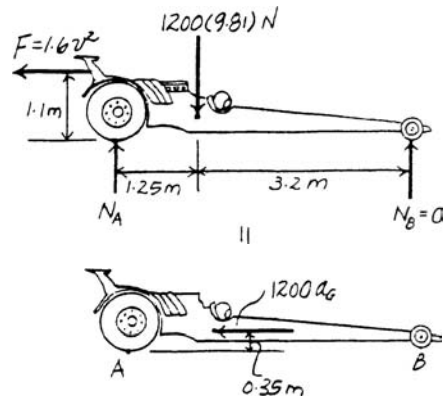

If the front wheels are on the verge of lifting off the ground, then $N_B = 0$.

$$\circlearrowleft + \Sigma M_A = \Sigma (M_k)_A; \qquad 1.6\,v^2\,(1.1) - 1200(9.81)(1.25) = 1200 a_G(0.35) \qquad \textbf{(1)}$$

$$\xrightarrow{+} \Sigma F_x = m(a_G)_x; \qquad 1.6v^2 = 1200 a_G \qquad \textbf{(2)}$$

Solving Eqs. (1) and (2) yields

$$a_G = 16.35 \text{ m/s}^2 \qquad v = 111 \text{ m/s} \qquad \textbf{Ans.}$$

17–27. When the lifting mechanism is operating, the 400-lb load is given an upward acceleration of 5 ft/s^2. Determine the compressive force the load creates in each of the columns, AB and CD. What is the compressive force in each of these columns if the load is moving upward at a constant velocity of 3 ft/s? Assume the columns only support an axial load.

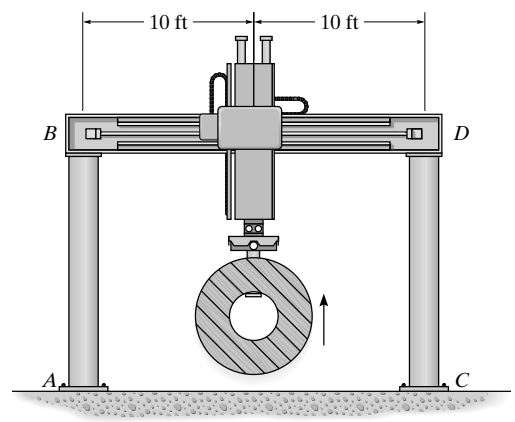

Equations of Motion: Applying Eq. 17–12 to FBD(a), we have

$$+\uparrow \Sigma F_y = m(a_G)_y; \qquad F - 400 = \left(\frac{400}{32.2}\right)(a_G)_y \qquad \textbf{(1)}$$

Equation of Equilibrium: Due to symmetry $F_{CD} = F_{AB}$. From FBD(b).

$$+\uparrow \Sigma F_y = 0; \qquad 2F_{AB} - F = 0 \qquad \textbf{(2)}$$

If $(a_G)_y = 5$ ft/s^2, from Eq. (1), $F = 462.11$ lb. Substitute into Eq. (2) yields

$$F_{AB} = F_{CD} = 231 \text{ lb} \qquad \textbf{Ans.}$$

If the load travels with a constant speed, $(a_G)_y = 0$. From Eq. (1), $F = 400$ lb. Substitute into Eq. (2) yields

$$F_{AB} = F_{CD} = 200 \text{ lb} \qquad \textbf{Ans.}$$

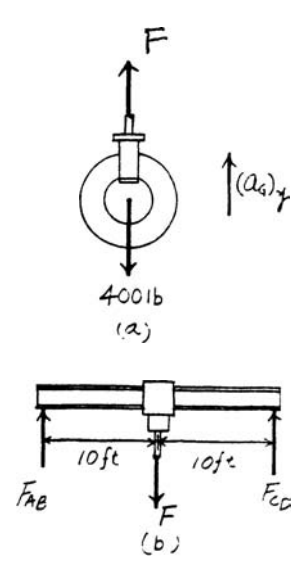

© 2010 Pearson Education, Inc., Upper Saddle River, NJ. All rights reserved. This material is protected under all copyright laws as they currently exist. No portion of this material may be reproduced, in any form or by any means, without permission in writing from the publisher.

***17–28.** The jet aircraft has a mass of 22 Mg and a center of mass at G. If a towing cable is attached to the upper portion of the nose wheel and exerts a force of $T = 400$ N as shown, determine the acceleration of the plane and the normal reactions on the nose wheel and each of the two wing wheels located at B. Neglect the lifting force of the wings and the mass of the wheels.

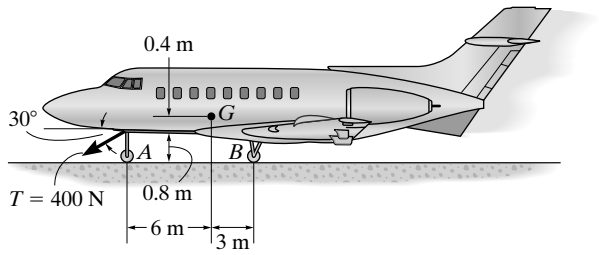

$\leftarrow \Sigma F_x = m(a_G)_x;$ $\quad 400 \cos 30° = 22\left(10^3\right) a_G$

$$a_G = 0.01575 \text{ m/s}^2 = 0.0157 \text{ m/s}^2 \qquad \textbf{Ans.}$$

$\circlearrowleft + \Sigma M_A = \Sigma (M_k)_A;$ $\quad 400 \cos 30° (0.8) + 2N_B (9) - 22\left(10^3\right)(9.81)(6)$

$$= 22\left(10^3\right)(0.01575)(1.2)$$

$$N_B = 71\,947.70 \text{ N} = 71.9 \text{ kN} \qquad \textbf{Ans.}$$

$+\uparrow \Sigma F_y = m(a_G)_y;$ $\quad N_A + 2(71\,947.70) - 22\left(10^3\right)(9.81) - 400 \sin 30° = 0$

$$N_A = 72\,124.60 \text{ N} = 72.1 \text{ kN} \qquad \textbf{Ans.}$$

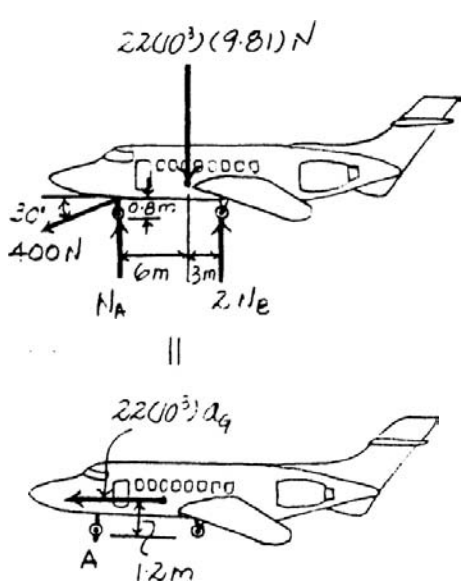

© 2010 Pearson Education, Inc., Upper Saddle River, NJ. All rights reserved. This material is protected under all copyright laws as they currently exist. No portion of this material may be reproduced, in any form or by any means, without permission in writing from the publisher.

•17–29. The lift truck has a mass of 70 kg and mass center at G. If it lifts the 120-kg spool with an acceleration of $3\ \text{m/s}^2$, determine the reactions on each of the four wheels. The loading is symmetric. Neglect the mass of the movable arm CD.

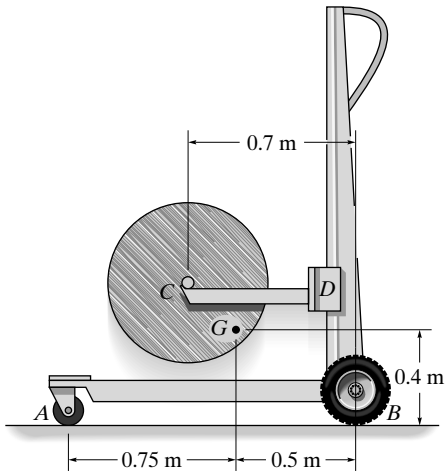

$\circlearrowleft + \Sigma M_B = \Sigma (M_k)_B;\qquad 70(9.81)(0.5) + 120(9.81)(0.7) - 2N_A(1.25)$

$= -120(3)(0.7)$

$N_A = 567.76\ \text{N} = 568\ \text{N}$ **Ans.**

$+\uparrow \Sigma F_y = m(a_G)_y;\qquad 2(567.76) + 2N_B - 120(9.81) - 70(9.81) = 120(3)$

$N_B = 544\ \text{N}$ **Ans.**

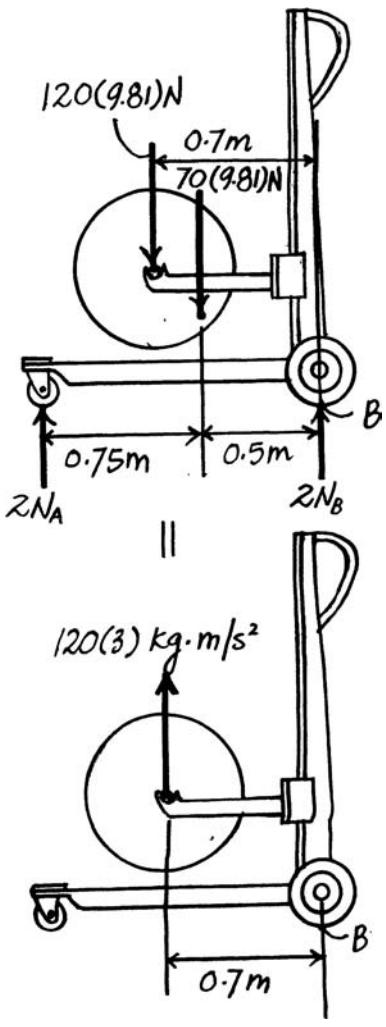

© 2010 Pearson Education, Inc., Upper Saddle River, NJ. All rights reserved. This material is protected under all copyright laws as they currently exist. No portion of this material may be reproduced, in any form or by any means, without permission in writing from the publisher.

17–30. The lift truck has a mass of 70 kg and mass center at G. Determine the largest upward acceleration of the 120-kg spool so that no reaction on the wheels exceeds 600 N.

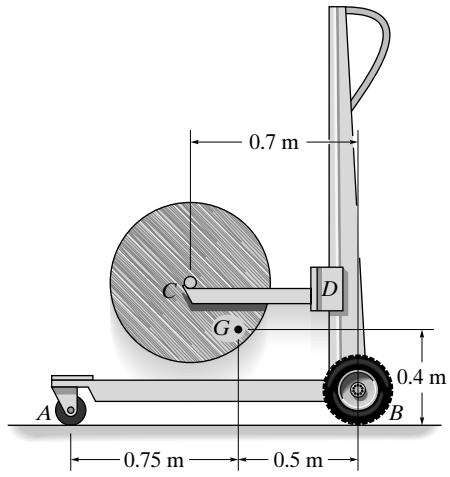

Assume $N_A = 600$ N.

$\circlearrowleft + \Sigma M_B = \Sigma (M_k)_B$; $\quad 70(9.81)(0.5) + 120(9.81)(0.7) - 2(600)(1.25) = -120a(0.7)$

$a = 3.960 \text{ m/s}^2$

$+\uparrow \Sigma F_y = m(a_G)_y$; $\quad 2(600) + 2N_B - 120(9.81) - 70(9.81) = 120(3.960)$

$N_B = 570 \text{ N} < 600 \text{ N}$ **OK**

Thus $a = 3.96 \text{ m/s}^2$ **Ans.**

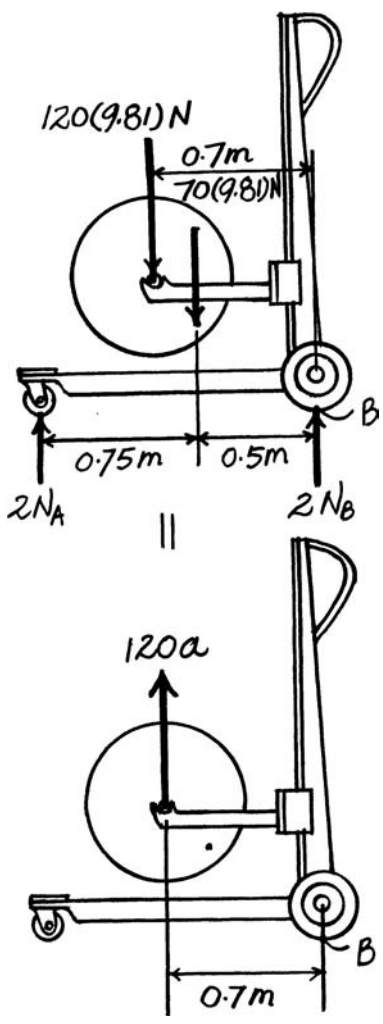

© 2010 Pearson Education, Inc., Upper Saddle River, NJ. All rights reserved. This material is protected under all copyright laws as they currently exist. No portion of this material may be reproduced, in any form or by any means, without permission in writing from the publisher.

17–31. The dragster has a mass of 1500 kg and a center of mass at G. If the coefficient of kinetic friction between the rear wheels and the pavement is $\mu_k = 0.6$, determine if it is possible for the driver to lift the front wheels, A, off the ground while the rear drive wheels are slipping. Neglect the mass of the wheels and assume that the front wheels are free to roll.

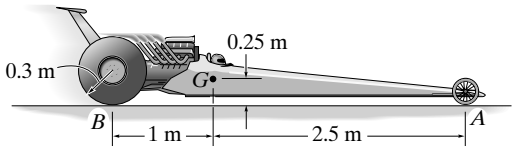

If the front wheels A lift off the ground, then $N_A = 0$.

$\circlearrowleft + \Sigma M_B = \Sigma (M_k)_B$; $\quad -1500(9.81)(1) = -1500 a_G (0.25)$

$$a_G = 39.24 \text{ m/s}^2$$

$\xrightarrow{+} \Sigma F_x = m(a_G)_x$; $\quad F_f = 1500(39.24) = 58860 \text{ N}$

$+\uparrow \Sigma F_y = m(a_G)_y$; $\quad N_B - 1500(9.81) = 0 \quad N_B = 14715 \text{ N}$

Since the required friction $F_f > (F_f)_{\max} = \mu_k N_B = 0.6(14715) = 8829 \text{ N}$, **it is not possible to lift the front wheels off the ground**. **Ans.**

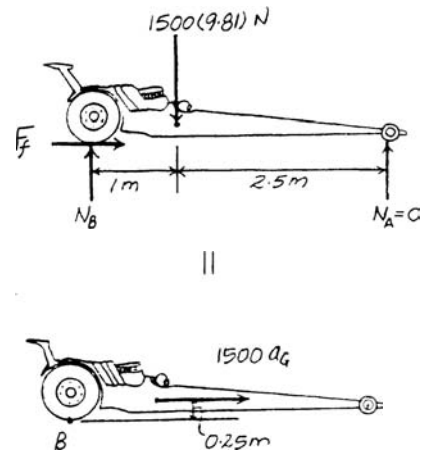

***17–32.** The dragster has a mass of 1500 kg and a center of mass at G. If no slipping occurs, determine the frictional force $\mathbf{F}_B$ which must be developed at each of the rear drive wheels B in order to create an acceleration of $a = 6 \text{ m/s}^2$. What are the normal reactions of each wheel on the ground? Neglect the mass of the wheels and assume that the front wheels are free to roll.

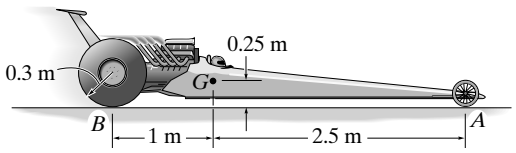

$\circlearrowleft + \Sigma M_B = \Sigma (M_k)_B$; $\quad 2N_A(3.5) - 1500(9.81)(1) = -1500(6)(0.25)$

$$N_A = 1780.71 \text{ N} = 1.78 \text{ kN} \qquad \textbf{Ans.}$$

$+\uparrow \Sigma F_y = m(a_G)_y$; $\quad 2N_B + 2(1780.71) - 1500(9.81) = 0$

$$N_B = 5576.79 \text{ N} = 5.58 \text{ kN} \qquad \textbf{Ans.}$$

$\xrightarrow{+} \Sigma F_x = m(a_G)_x$; $\quad 2F_B = 1500(6)$

$$F_B = 4500 \text{ N} = 4.50 \text{ kN} \qquad \textbf{Ans.}$$

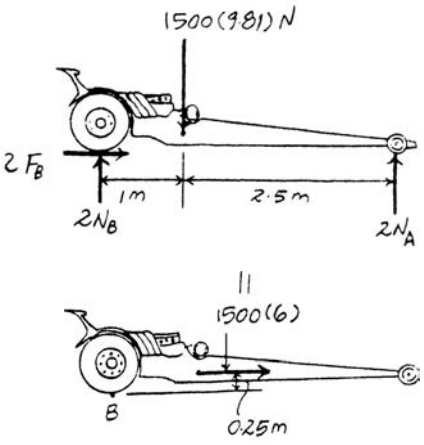

© 2010 Pearson Education, Inc., Upper Saddle River, NJ. All rights reserved. This material is protected under all copyright laws as they currently exist. No portion of this material may be reproduced, in any form or by any means, without permission in writing from the publisher.

•17–33. At the start of a race, the rear drive wheels B of the 1550-lb car slip on the track. Determine the car's acceleration and the normal reaction the track exerts on the front pair of wheels A and rear pair of wheels B. The coefficient of kinetic friction is $\mu_k = 0.7$, and the mass center of the car is at G. The front wheels are free to roll. Neglect the mass of all the wheels.

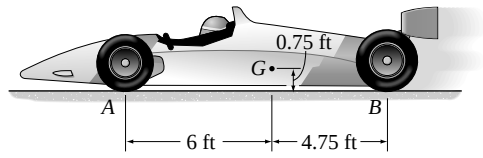

Equations of Motion: Since the rear wheels B are required to slip, the frictional force developed is $F_B = \mu_s N_B = 0.7N_B$.

$$\overset{+}{\leftarrow} \Sigma F_x = m(a_G)_x; \qquad 0.7N_B = \frac{1550}{32.2}a \qquad \textbf{(1)}$$

$$+\uparrow \Sigma F_y = m(a_G)_y; \quad N_A + N_B - 1550 = 0 \qquad \textbf{(2)}$$

$$\circlearrowleft + \Sigma M_G = 0; \qquad N_B(4.75) - 0.7N_B(0.75) - N_A(6) = 0 \qquad \textbf{(3)}$$

Solving Eqs. (1), (2), and (3) yields

$N_A = 640.46 \text{ lb} = 640 \text{ lb}$ $\qquad N_B = 909.54 \text{ lb} = 910 \text{ lb}$ $\qquad a = 13.2 \text{ ft/s}^2$ **Ans.**

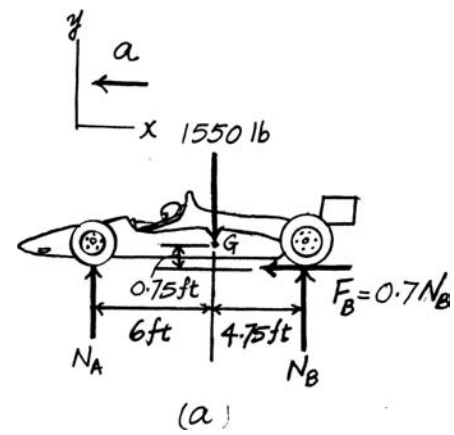

17–34. Determine the maximum acceleration that can be achieved by the car without having the front wheels A leave the track or the rear drive wheels B slip on the track. The coefficient of static friction is $\mu_s = 0.9$. The car's mass center is at G, and the front wheels are free to roll. Neglect the mass of all the wheels.

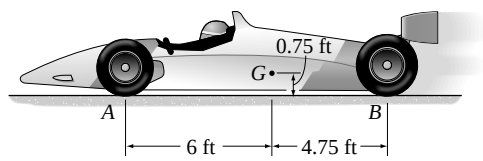

Equations of Motion:

$$\overset{+}{\leftarrow} \Sigma F_x = m(a_G)_x; \qquad F_B = \frac{1550}{32.2}a \qquad \textbf{(1)}$$

$$+\uparrow \Sigma F_y = m(a_G)_y; \quad N_A + N_B - 1550 = 0 \qquad \textbf{(2)}$$

$$\circlearrowleft + \Sigma M_G = 0; \qquad N_B(4.75) - F_B(0.75) - N_A(6) = 0 \qquad \textbf{(3)}$$

If we assume that the front wheels are about to leave the track, $N_A = 0$. Substituting this value into Eqs. (2) and (3) and solving Eqs. (1), (2), (3),

$$N_B = 1550 \text{ lb} \qquad F_B = 9816.67 \text{ lb} \qquad a = 203.93 \text{ ft/s}^2$$

Since $F_B > (F_B)_{\max} = \mu_s N_B = 0.9(1550) \text{ lb} = 1395 \text{ lb}$, the rear wheels will slip. Thus, the solution must be reworked so that the rear wheels are about to slip.

$$F_B = \mu_s N_B = 0.9N_B \qquad \textbf{(4)}$$

Solving Eqs. (1), (2), (3), and (4) yields

$$N_A = 626.92 \text{ lb} \qquad N_B = 923.08 \text{ lb}$$

$$a = 17.26 \text{ ft/s}^2 = 17.3 \text{ ft/s}^2 \qquad \textbf{Ans.}$$

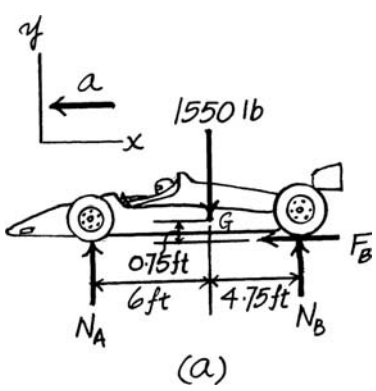

© 2010 Pearson Education, Inc., Upper Saddle River, NJ. All rights reserved. This material is protected under all copyright laws as they currently exist. No portion of this material may be reproduced, in any form or by any means, without permission in writing from the publisher.

17–35. The sports car has a mass of 1.5 Mg and a center of mass at G. Determine the shortest time it takes for it to reach a speed of 80 km/h, starting from rest, if the engine only drives the rear wheels, whereas the front wheels are free rolling. The coefficient of static friction between the wheels and the road is $\mu_s = 0.2$. Neglect the mass of the wheels for the calculation. If driving power could be supplied to all four wheels, what would be the shortest time for the car to reach a speed of 80 km/h?

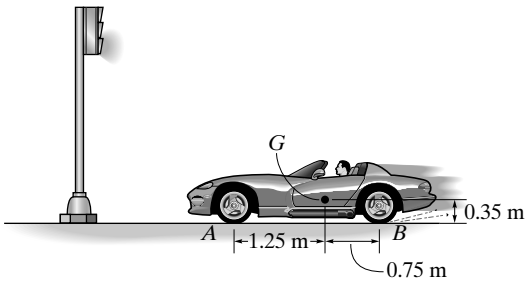

$\overset{+}{\leftarrow} \Sigma F_x = m(a_G)_x; \qquad 0.2N_A + 0.2N_B = 1500a_G$ **(1)**

$+\uparrow \Sigma F_y = m(a_G)_y; \qquad N_A + N_B - 1500(9.81) = 0$ **(2)**

$\circlearrowleft + \Sigma M_G = 0; \qquad -N_A(1.25) + N_B(0.75) - (0.2N_A + 0.2N_B)(0.35) = 0$ **(3)**

For Rear-Wheel Drive:

Set the friction force $0.2N_A = 0$ in Eqs. (1) and (3).

Solving yields:

$N_A = 5.18 \text{ kN} > 0$ **(OK)** $\quad N_B = 9.53 \text{ kN} \quad a_G = 1.271 \text{m/s}^2$

Since $v = 80 \text{ km/h} = 22.22 \text{ m/s}$, then

$\left(\overset{+}{\leftarrow}\right) \qquad v = v_0 + a_G t$

$22.22 = 0 + 1.271t$

$t = 17.5 \text{ s}$ **Ans.**

For 4-Wheel Drive:

$N_A = 5.00 \text{ kN} > 0$ **(OK)** $\quad N_B = 9.71 \text{ kN} \quad a_G = 1.962 \text{m/s}^2$

Since $v_2 = 80 \text{ km/h} = 22.22 \text{ m/s}$, then

$v_2 = v_1 + a_G t$

$22.22 = 0 + 1.962t$

$t = 11.3 \text{ s}$ **Ans.**

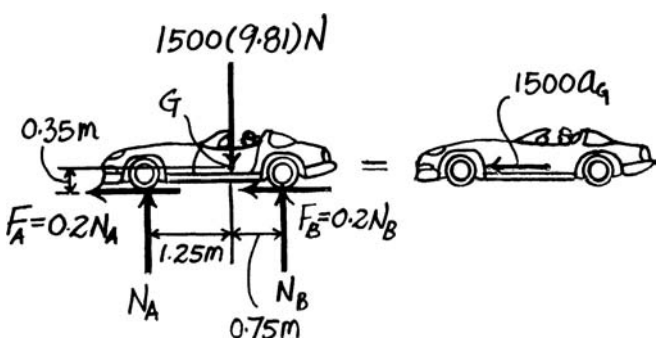

© 2010 Pearson Education, Inc., Upper Saddle River, NJ. All rights reserved. This material is protected under all copyright laws as they currently exist. No portion of this material may be reproduced, in any form or by any means, without permission in writing from the publisher.

***17–36.** The forklift travels forward with a constant speed of 9 ft/s. Determine the shortest stopping distance without causing any of the wheels to leave the ground. The forklift has a weight of 2000 lb with center of gravity at G_1, and the load weighs 900 lb with center of gravity at G_2. Neglect the weight of the wheels.

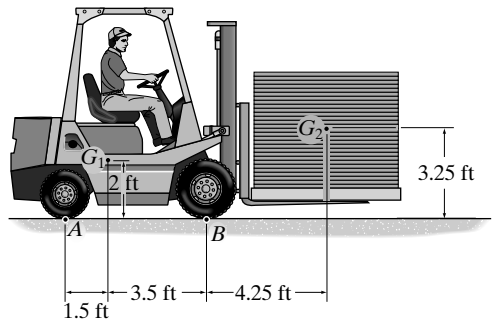

Equations of Motion: Since it is required that the rear wheels are about to leave the ground, $N_A = 0$. Applying the moment equation of motion of about point B,

$$\circlearrowleft + \Sigma M_B = (M_k)_B; \qquad 2000(3.5) - 900(4.25) = \left(\frac{2000}{32.2}a\right)(2) + \left(\frac{900}{32.2}a\right)(3.25)$$

$$a = 14.76 \text{ ft/s}^2 \leftarrow$$

Kinematics: Since the acceleration of the forklift is constant,

$$\left(\overset{+}{\rightarrow}\right) \qquad v^2 = v_0^2 + 2a_c(s - s_0)$$

$$0 = 9^2 + 2(-14.76)(s - 0)$$

$$s = 2.743 \text{ ft} = 2.74 \text{ ft} \qquad \textbf{Ans.}$$

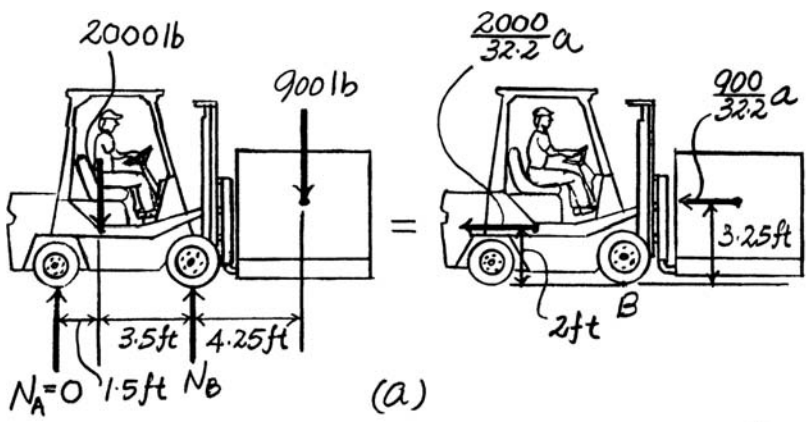

© 2010 Pearson Education, Inc., Upper Saddle River, NJ. All rights reserved. This material is protected under all copyright laws as they currently exist. No portion of this material may be reproduced, in any form or by any means, without permission in writing from the publisher.

•17–37. If the forklift's rear wheels supply a combined traction force of $F_A = 300$ lb, determine its acceleration and the normal reactions on the pairs of rear wheels and front wheels. The forklift has a weight of 2000 lb, with center of gravity at G_1, and the load weighs 900 lb, with center of gravity at G_2. The front wheels are free to roll. Neglect the weight of the wheels.

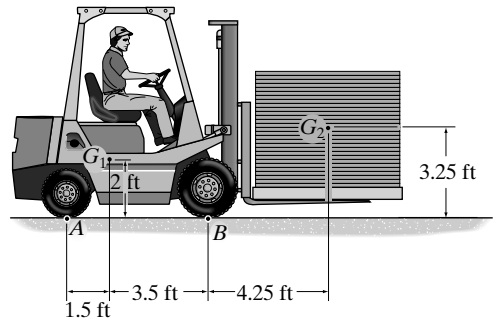

Equations of Motion: The acceleration of the forklift can be obtained directly by writing the force equation of motion along the x axis.

$$\xrightarrow{+} \Sigma F_x = m(a_G)_x; \qquad 300 = \frac{2000}{32.2}a + \frac{900}{32.2}a$$

$$a = 3.331 \text{ ft/s}^2 \qquad \textbf{Ans.}$$

Using this result and writing the moment equation of motion about point A,

$$\circlearrowleft + \Sigma M_A = (M_k)_A; \qquad N_B(5) - 2000(1.5) - 900(9.25) = -\left(\frac{2000}{32.2}\right)(3.331)(2) - \left(\frac{900}{32.2}\right)(3.331)(3.25)$$

$$N_B = 2121.72 \text{ lb} = 2122 \text{ lb} \qquad \textbf{Ans.}$$

Finally, writing the force equation of motion along the y axis and using this result,

$$+\uparrow \Sigma F_y = m(a_G)_y; \quad N_A + 2121.72 - 2000 - 900 = 0$$

$$N_A = 778.28 \text{ lb} = 778 \text{ lb} \qquad \textbf{Ans.}$$

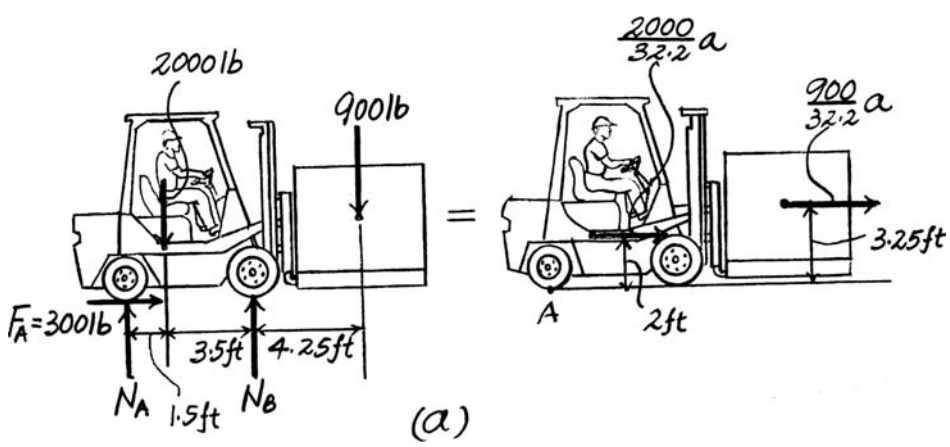

© 2010 Pearson Education, Inc., Upper Saddle River, NJ. All rights reserved. This material is protected under all copyright laws as they currently exist. No portion of this material may be reproduced, in any form or by any means, without permission in writing from the publisher.

17–38. Each uniform box on the stack of four boxes has a weight of 8 lb. The stack is being transported on the dolly, which has a weight of 30 lb. Determine the maximum force **F** which the woman can exert on the handle in the direction shown so that no box on the stack will tip or slip. The coefficient of the static friction at all points of contact is $\mu_s = 0.5$. The dolly wheels are free to roll. Neglect their mass.

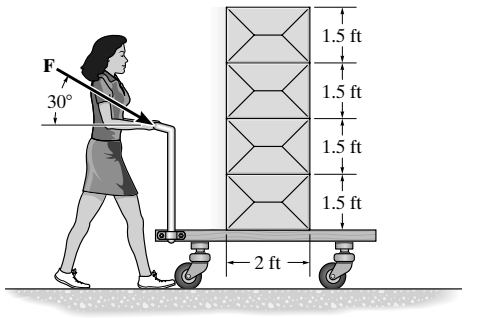

Assume that the boxes up, then $x = 1$ ft. Applying Eq. 17–12 to FBD(a). we have

$$\circlearrowleft + \Sigma M_A = \Sigma (M_k)_A; \qquad -32(1) = -\left[\left(\frac{32}{32.2}\right)a_G\right](3) \qquad a_G = 10.73 \text{ ft/s}^2$$

$$+\uparrow \Sigma F_y = m(a_G)_y; \qquad N_A - 32 = 0 \qquad N_A = 32.0 \text{ lb}$$

$$\overset{+}{\rightarrow} \Sigma F_x = m(a_G)_x; \qquad F_f = \left(\frac{32}{32.2}\right)(10.73) = 10.67 \text{ lb}$$

Since $F_f < (F_f)_{\max} = \mu_s N_A = 0.5(32.0) = 16.0$ lb. slipping will not occur. Hence, the boxes and the dolly moves as a unit. From FBD(b),

$$\overset{+}{\rightarrow} \Sigma F_x = m(a_G)_x; \qquad F \cos 30° = \left(\frac{32 + 30}{32.2}\right)(10.73)$$

$$F = 23.9 \text{ lb} \qquad \textbf{Ans.}$$

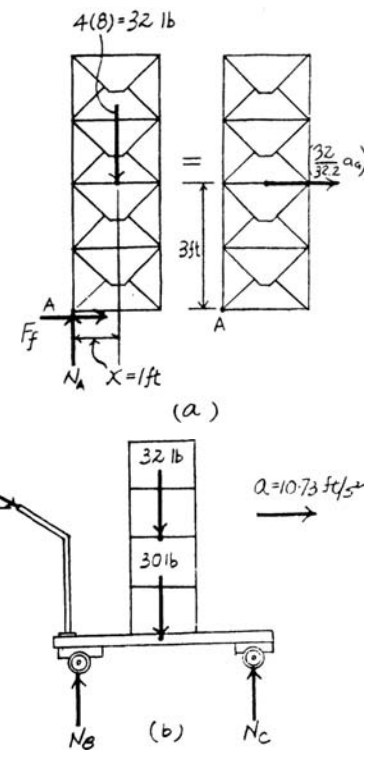

17–39. The forklift and operator have a combined weight of 10 000 lb and center of mass at G. If the forklift is used to lift the 2000-lb concrete pipe, determine the maximum vertical acceleration it can give to the pipe so that it does not tip forward on its front wheels.

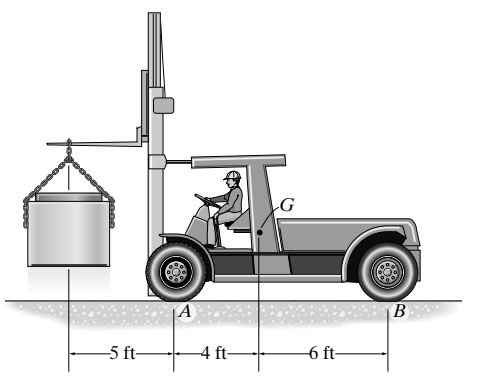

It is required that $N_B = 0$.

$$\circlearrowleft + \Sigma M_A = \Sigma (M_k)_A; \qquad 2000(5) - 10000(4) = -\left[\left(\frac{2000}{32.2}\right)a\right](5)$$

$$a = 96.6 \text{ ft/s}^2 \qquad \textbf{Ans.}$$

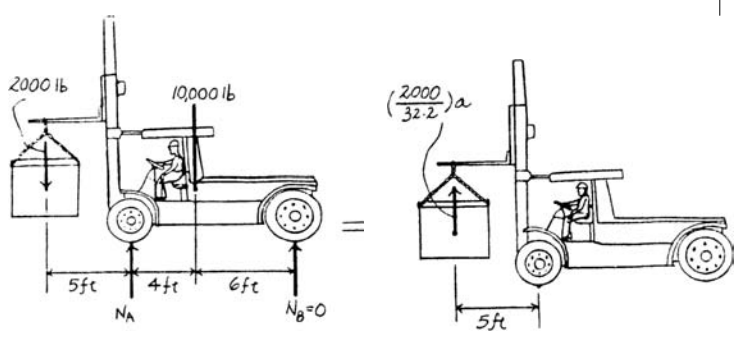

© 2010 Pearson Education, Inc., Upper Saddle River, NJ. All rights reserved. This material is protected under all copyright laws as they currently exist. No portion of this material may be reproduced, in any form or by any means, without permission in writing from the publisher.

***17–40.** The forklift and operator have a combined weight of 10 000 lb and center of mass at G. If the forklift is used to lift the 2000-lb concrete pipe, determine the normal reactions on each of its four wheels if the pipe is given an upward acceleration of 4 ft/s^2.

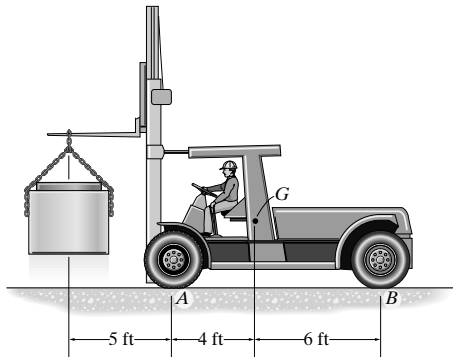

$\circlearrowleft + \Sigma M_A = \Sigma (M_k)_A ;\qquad 2000(5) + 2N_B(10) - 10000(4)$

$$= -\left[\left(\frac{2000}{32.2}\right)(4)\right](5)$$

$$N_B = 1437.89 \text{ lb} = 1.44 \text{ kip} \qquad \textbf{Ans.}$$

$+\uparrow \Sigma F_y = m(a_G)_y ;\qquad 2N_A + 2(1437.89) - 2000 - 10000 = \left(\frac{2000}{32.2}\right)(4)$

$$N_A = 4686.34 \text{ lb} = 4.69 \text{ kip} \qquad \textbf{Ans.}$$

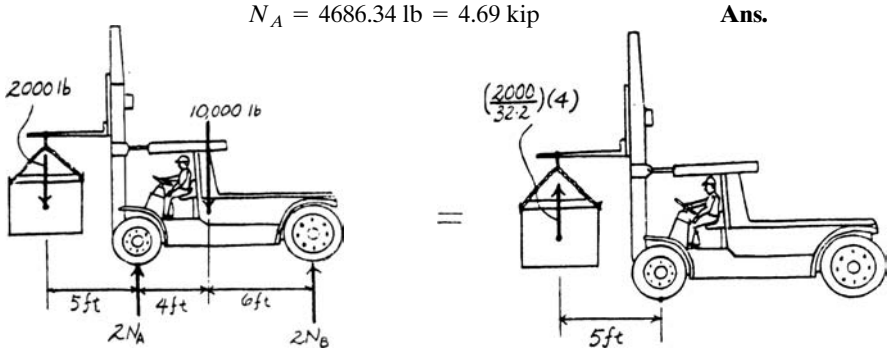

•17–41. The car, having a mass of 1.40 Mg and mass center at G_c, pulls a loaded trailer having a mass of 0.8 Mg and mass center at G_t. Determine the normal reactions on both the car's front and rear wheels and the trailer's wheels if the driver applies the car's rear brakes C and causes the car to skid. Take $\mu_C = 0.4$ and assume the hitch at A is a pin or ball-and-socket joint. The wheels at B and D are free to roll. Neglect their mass and the mass of the driver.

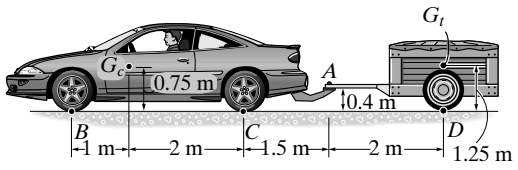

Equations of Motion: Since the car skids, then $F_f = \mu_C N_C = 0.4N_C$. Applying Eq. 17–12 to FBD(a), we have

$\circlearrowleft + \Sigma M_A = \Sigma (M_k)_A ;\qquad 1400(9.81)(3.5) + 0.4N_C(0.4) - N_B(4.5)$

$$-N_C(1.5) = -1400a(0.35) \qquad \textbf{(1)}$$

$+\uparrow \Sigma F_y = m(a_G)_y ;\qquad N_B + N_C - 1400(9.81) - A_y = 0 \qquad \textbf{(2)}$

$\xrightarrow{+} \Sigma F_x = m(a_G)_x ;\qquad 0.4N_C - A_x = 1400a \qquad \textbf{(3)}$

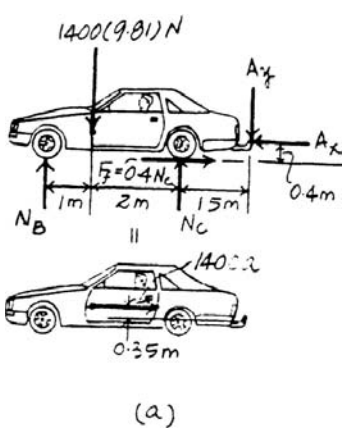

From FBD(b),

$\circlearrowleft + \Sigma M_A = \Sigma (M_k)_A ;\qquad N_D(2) - 800(9.81)(2) = -800a(0.85) \qquad \textbf{(4)}$

$+\uparrow \Sigma F_y = m(a_G)_y ;\qquad N_D + A_y - 800(9.81) = 0 \qquad \textbf{(5)}$

$\xrightarrow{+} \Sigma F_x = m(a_G)_x ;\qquad A_x = 800a \qquad \textbf{(6)}$

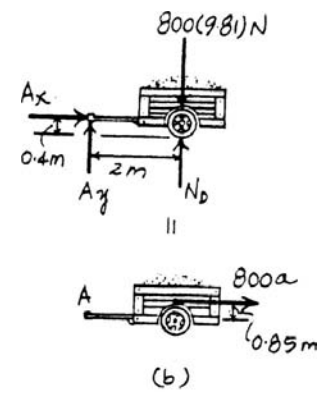

Solving Eqs. (1), (2), (3), (4), (5), and (6) yields

$N_B = 9396.95 \text{ N} = 9.40 \text{ kN} \qquad N_C = 4622.83 \text{ N} = 4.62 \text{ kN} \qquad$ **Ans.**

$N_D = 7562.23 \text{ N} = 7.56 \text{ kN} \qquad$ **Ans.**

$a = 0.8405 \text{ m/s}^2 \qquad A_x = 672.41 \text{ N} \qquad A_y = 285.77 \text{ N}$

© 2010 Pearson Education, Inc., Upper Saddle River, NJ. All rights reserved. This material is protected under all copyright laws as they currently exist. No portion of this material may be reproduced, in any form or by any means, without permission in writing from the publisher.

17–42. The uniform crate has a mass of 50 kg and rests on the cart having an inclined surface. Determine the smallest acceleration that will cause the crate either to tip or slip relative to the cart. What is the magnitude of this acceleration? The coefficient of static friction between the crate and the cart is $\mu_s = 0.5$.

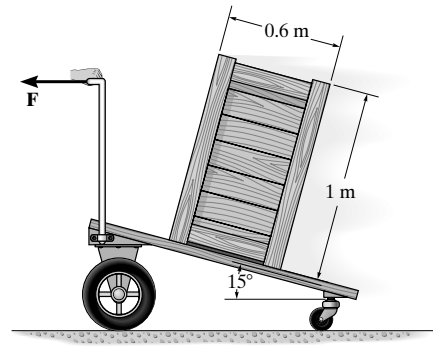

Equations of Motion: Assume that the crate slips, then $F_f = \mu_s N = 0.5N$.

$\circlearrowleft + \Sigma M_A = \Sigma (M_k)_A$; $\quad 50(9.81)\cos 15°(x) - 50(9.81)\sin 15°(0.5)$

$$= 50a\cos 15°(0.5) + 50a\sin 15°(x) \qquad \textbf{(1)}$$

$+\nearrow \Sigma F_{y'} = m(a_G)_{y'}$; $\quad N - 50(9.81)\cos 15° = -50a\sin 15° \qquad \textbf{(2)}$

$\searrow + \Sigma F_{x'} = m(a_G)_{x'}$; $\quad 50(9.81)\sin 15° - 0.5N = -50a\cos 15° \qquad \textbf{(3)}$

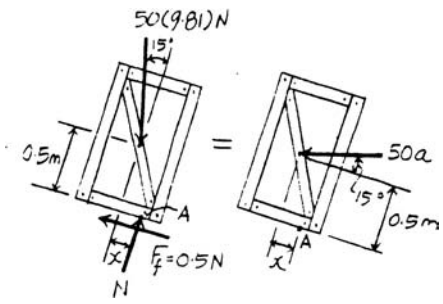

Solving Eqs. (1), (2), and (3) yields

$$N = 447.81 \text{ N} \qquad x = 0.250 \text{ m}$$

$$a = 2.01 \text{ m/s}^2 \qquad \textbf{Ans.}$$

Since $x < 0.3$ m, then crate will not tip. Thus, **the crate slips**. **Ans.**

17–43. Arm BDE of the industrial robot is activated by applying the torque of $M = 50$ N·m to link CD. Determine the reactions at pins B and D when the links are in the position shown and have an angular velocity of 2 rad/s. Arm BDE has a mass of 10 kg with center of mass at G_1. The container held in its grip at E has a mass of 12 kg with center of mass at G_2. Neglect the mass of links AB and CD.

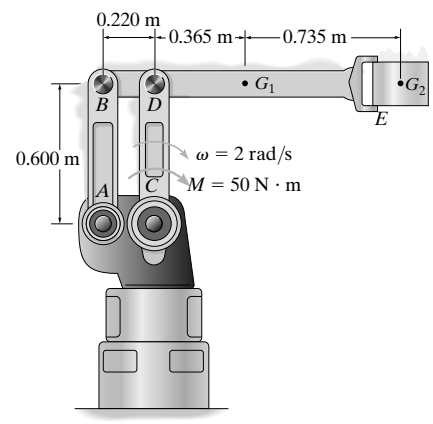

Curvilinear translation:

$$(a_D)_n = (a_G)_n = (2)^2(0.6) = 2.4 \text{ m/s}^2$$

Member DC:

$\circlearrowright + \Sigma M_C = 0$; $\quad -D_x(0.6) + 50 = 0$

$$D_x = 83.33 \text{ N} = 83.3 \text{ N} \qquad \textbf{Ans.}$$

Member BDE:

$\circlearrowright + \Sigma M_D = \Sigma (M_k)_D$; $\quad -F_{BA}(0.220) + 10(9.81)(0.365) + 12(9.81)(1.10)$

$$= 10(2.4)(0.365) + 12(2.4)(1.10)$$

$$F_{BA} = 567.54 \text{ N} = 568 \text{ N} \qquad \textbf{Ans.}$$

$+\uparrow \Sigma F_y = m(a_G)_y$; $\quad -567.54 + D_y - 10(9.81) - 12(9.81) = -10(2.4) - 12(2.4)$

$$D_y = 731 \text{ N} \qquad \textbf{Ans.}$$

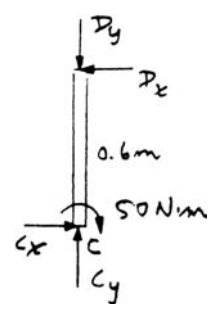

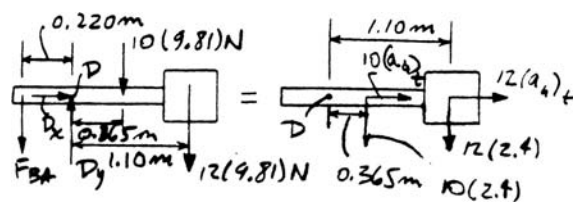

© 2010 Pearson Education, Inc., Upper Saddle River, NJ. All rights reserved. This material is protected under all copyright laws as they currently exist. No portion of this material may be reproduced, in any form or by any means, without permission in writing from the publisher.

***17–44.** The handcart has a mass of 200 kg and center of mass at G. Determine the normal reactions at each of the two wheels at A and at B if a force of $P = 50$ N is applied to the handle. Neglect the mass of the wheels.

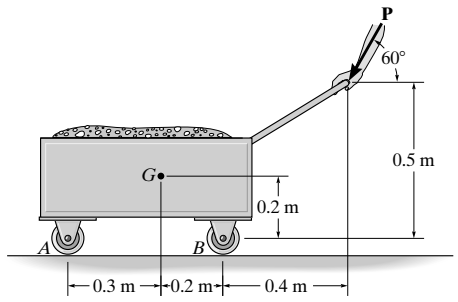

$\overset{+}{\leftarrow} \Sigma F_x = m(a_G)_x;\qquad 50\cos 60° = 200a_G$

$+\uparrow \Sigma F_y = m(a_G)_y;\qquad N_A + N_B - 200(9.81) - 50\sin 60° = 0$

$\circlearrowleft + \Sigma M_G = 0;\qquad -N_A(0.3) + N_B(0.2) + 50\cos 60°(0.3) - 50\sin 60°(0.6) = 0$

$a_G = 0.125\ \text{m/s}^2 \qquad N_A = 765.2\ \text{N} \qquad N_B = 1240\ \text{N}$

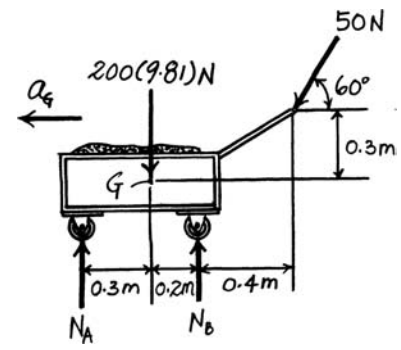

At each wheel,

$$N_A' = \frac{N_A}{2} = 383\ \text{N} \qquad \textbf{Ans.}$$

$$N_B' = \frac{N_B}{2} = 620\ \text{N} \qquad \textbf{Ans.}$$

•17–45. The handcart has a mass of 200 kg and center of mass at G. Determine the largest magnitude of force **P** that can be applied to the handle so that the wheels at A or B continue to maintain contact with the ground. Neglect the mass of the wheels.

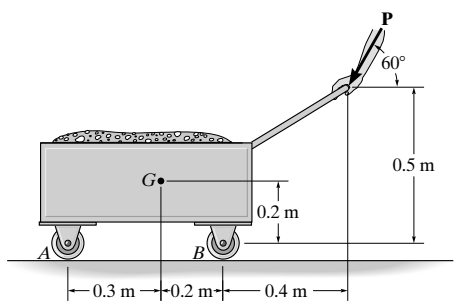

$\overset{+}{\leftarrow} \Sigma F_x = m(a_G)_x;\qquad P\cos 60° = 200a_G$

$+\uparrow \Sigma F_y = m(a_G)_y;\qquad N_A + N_B - 200(9.81) - P\sin 60° = 0$

$\circlearrowleft + \Sigma M_G = 0;\qquad -N_A(0.3) + N_B(0.2) + P\cos 60°(0.3) - P\sin 60°(0.6) = 0$

For $P_{\max}$, require

$N_A = 0$

$P = 1998\ \text{N} = 2.00\ \text{kN} \qquad \textbf{Ans.}$

$N_B = 3692\ \text{N}$

$a_G = 4.99\ \text{m/s}^2$

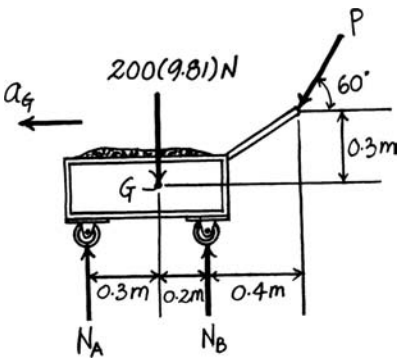

© 2010 Pearson Education, Inc., Upper Saddle River, NJ. All rights reserved. This material is protected under all copyright laws as they currently exist. No portion of this material may be reproduced, in any form or by any means, without permission in writing from the publisher.

17–46. The jet aircraft is propelled by four engines to increase its speed uniformly from rest to 100 m/s in a distance of 500 m. Determine the thrust **T** developed by each engine and the normal reaction on the nose wheel A. The aircraft's total mass is 150 Mg and the mass center is at point G. Neglect air and rolling resistance and the effect of lift.

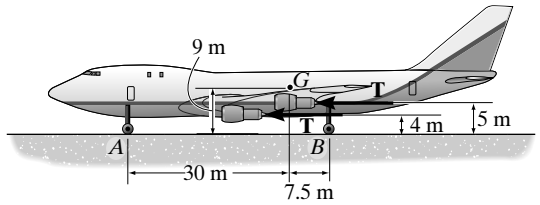

Kinematics: The acceleration of the aircraft can be determined from

$$v^2 = v_0{}^2 + 2a_c(s - s_0)$$

$$100^2 = 0^2 + 2a(500 - 0)$$

$$a = 10 \text{ m/s}^2$$

Equations of Motion: The thrust **T** can be determined directly by writing the force equation of motion along the x axis.

$$\overset{+}{\leftarrow} \Sigma F_x = m(a_G)_x; \qquad 4T = 150\left(10^3\right)(10)$$

$$T = 375\left(10^3\right)\text{N} = 375 \text{ kN} \qquad \textbf{Ans.}$$

Writing the moment equation of equilibrium about point B and using the result of **T**,

$$\circlearrowleft + \Sigma M_B = (M_k)_B; \qquad 150\left(10^3\right)(9.81)(7.5) + 2\left[375\left(10^3\right)\right](5) + 2\left[375\left(10^3\right)\right](4)$$

$$- N_A(37.5) = 150\left(10^3\right)(10)(9)$$

$$N_A = 114.3\left(10^3\right)\text{N} = 114 \text{ kN} \qquad \textbf{Ans.}$$

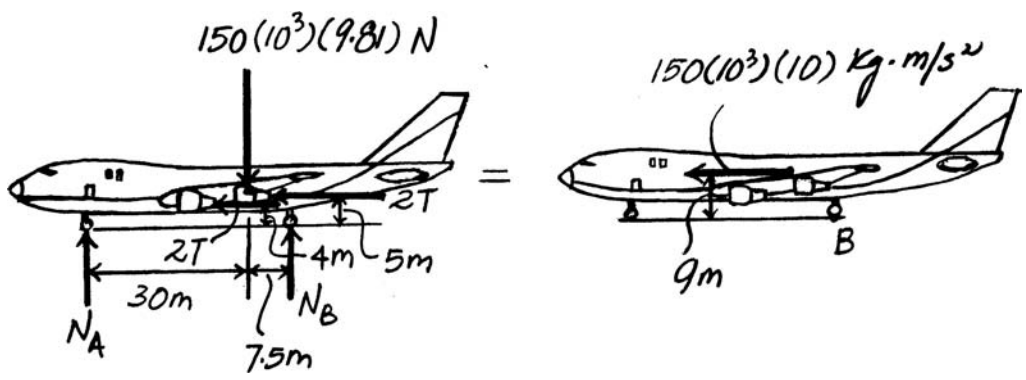

© 2010 Pearson Education, Inc., Upper Saddle River, NJ. All rights reserved. This material is protected under all copyright laws as they currently exist. No portion of this material may be reproduced, in any form or by any means, without permission in writing from the publisher.

17–47. The 1-Mg forklift is used to raise the 750-kg crate with a constant acceleration of $2\,\text{m/s}^2$. Determine the reaction exerted by the ground on the pairs of wheels at A and at B. The centers of mass for the forklift and the crate are located at G_1 and G_2, respectively.

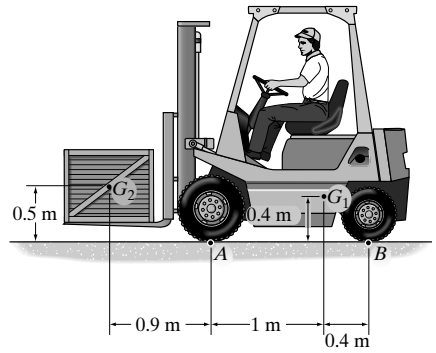

Equations of Motion: $\mathbf{N}_B$ can be obtained directly by writing the moment equation of motion about point A.

$$\circlearrowleft + \Sigma M_A = (M_k)_A; \quad N_B(1.4) + 750(9.81)(0.9) - 1000(9.81)(1) = -750(2)(0.9)$$

$$N_B = 1313.03\ \text{N} = 1.31\ \text{kN} \qquad \textbf{Ans.}$$

Using this result to write the force equation of motion along the y axis,

$$+\uparrow \Sigma F_y = m(a_G)_y; \quad N_A + 1313.03 - 750(9.81) - 1000(9.81) = 750(2)$$

$$N_A = 17354.46\ \text{N} = 17.4\ \text{kN} \qquad \textbf{Ans.}$$

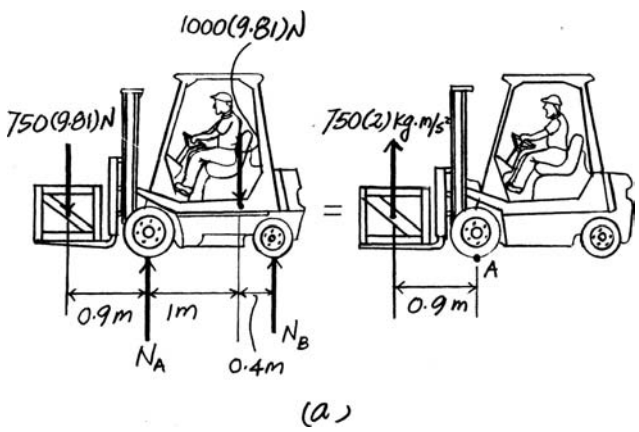

(a)

***17–48.** Determine the greatest acceleration with which the 1-Mg forklift can raise the 750-kg crate, without causing the wheels at B to leave the ground. The centers of mass for the forklift and the crate are located at G_1 and G_2, respectively.

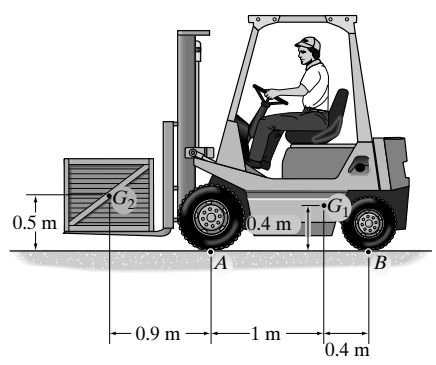

Equations of Motion: Since the wheels at B are required to just lose contact with the ground, $N_B = 0$. The direct solution for **a** can be obtained by writing the moment equation of motion about point A.

$$\circlearrowleft + \Sigma M_A = (M_k)_A; \quad 750(9.81)(0.9) - 1000(9.81)(1) = -750a(0.9)$$

$$a = 4.72\ \text{m/s}^2 \qquad \textbf{Ans.}$$

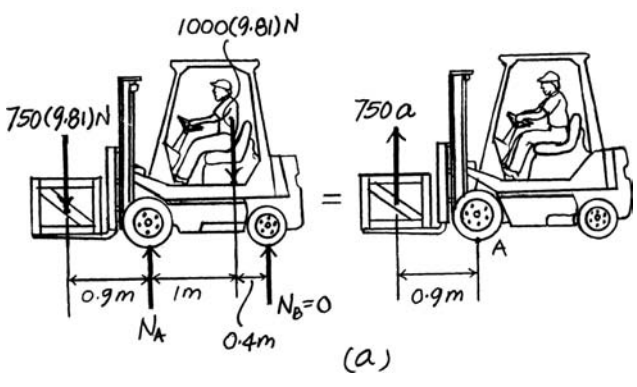

(a)

© 2010 Pearson Education, Inc., Upper Saddle River, NJ. All rights reserved. This material is protected under all copyright laws as they currently exist. No portion of this material may be reproduced, in any form or by any means, without permission in writing from the publisher.

•17–49. The snowmobile has a weight of 250 lb, centered at G_1, while the rider has a weight of 150 lb, centered at G_2. If the acceleration is $a = 20\ \text{ft/s}^2$, determine the maximum height h of G_2 of the rider so that the snowmobile's front skid does not lift off the ground. Also, what are the traction (horizontal) force and normal reaction under the rear tracks at A?

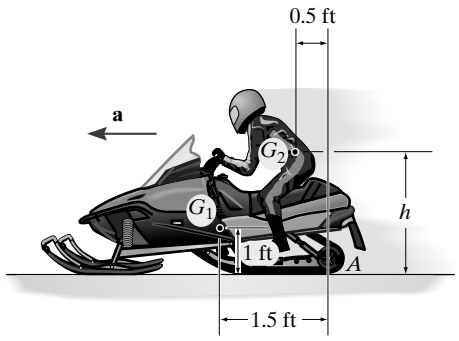

Equations of Motion: Since the front skid is required to be on the verge of lift off, $N_B = 0$. Writing the moment equation about point A and referring to Fig. a,

$$\circlearrowleft + \Sigma M_A = (M_k)_A; \qquad 250(1.5) + 150(0.5) = \frac{150}{32.2}(20)(h_{\max}) + \frac{250}{32.2}(20)(1)$$

$$h_{\max} = 3.163\ \text{ft} = 3.16\ \text{ft} \qquad \textbf{Ans.}$$

Writing the force equations of motion along the x and y axes,

$$\overset{+}{\leftarrow} \Sigma F_x = m(a_G)_x; \qquad F_A = \frac{150}{32.2}(20) + \frac{250}{32.2}(20)$$

$$F_A = 248.45\ \text{lb} = 248\ \text{lb} \qquad \textbf{Ans.}$$

$$+\uparrow \Sigma F_y = m(a_G)_y; \quad N_A - 250 - 150 = 0$$

$$N_A = 400\ \text{lb} \qquad \textbf{Ans.}$$

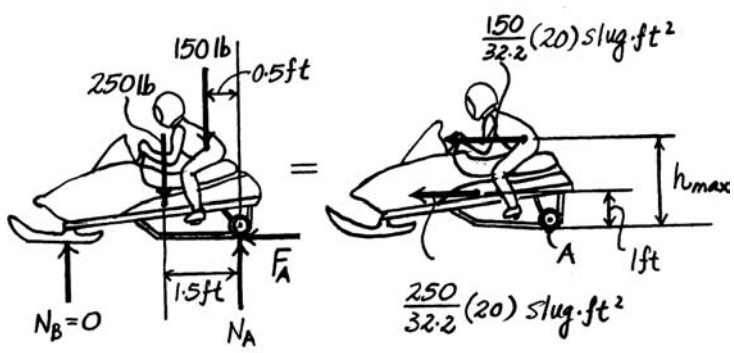

(a)

© 2010 Pearson Education, Inc., Upper Saddle River, NJ. All rights reserved. This material is protected under all copyright laws as they currently exist. No portion of this material may be reproduced, in any form or by any means, without permission in writing from the publisher.

17–50. The snowmobile has a weight of 250 lb, centered at G_1, while the rider has a weight of 150 lb, centered at G_2. If $h = 3$ ft, determine the snowmobile's maximum permissible acceleration **a** so that its front skid does not lift off the ground. Also, find the traction (horizontal) force and the normal reaction under the rear tracks at A.

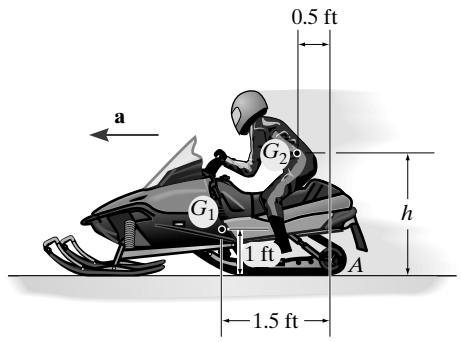

Equations of Motion: Since the front skid is required to be on the verge of lift off, $N_B = 0$. Writing the moment equation about point A and referring to Fig. a,

$$\circlearrowleft + \Sigma M_A = (M_k)_A; \qquad 250(1.5) + 150(0.5) = \left(\frac{150}{32.2}a_{\max}\right)(3) + \left(\frac{250}{32.2}a_{\max}\right)(1)$$

$$a_{\max} = 20.7 \text{ ft/s}^2 \qquad \textbf{Ans.}$$

Writing the force equations of motion along the x and y axes and using this result, we have

$$\overset{+}{\leftarrow} \Sigma F_x = m(a_G)_x; \qquad F_A = \frac{150}{32.2}(20.7) + \frac{250}{32.2}(20.7)$$

$$F_A = 257.14 \text{ lb} = 257 \text{ lb} \qquad \textbf{Ans.}$$

$$+\uparrow \Sigma F_y = m(a_G)_y; \quad N_A - 150 - 250 = 0$$

$$N_A = 400 \text{ lb} \qquad \textbf{Ans.}$$

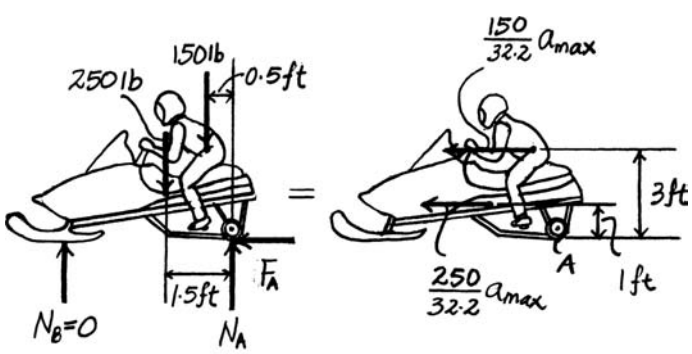

(a)

© 2010 Pearson Education, Inc., Upper Saddle River, NJ. All rights reserved. This material is protected under all copyright laws as they currently exist. No portion of this material may be reproduced, in any form or by any means, without permission in writing from the publisher.

17–51. The trailer with its load has a mass of 150 kg and a center of mass at G. If it is subjected to a horizontal force of $P = 600$ N, determine the trailer's acceleration and the normal force on the pair of wheels at A and at B. The wheels are free to roll and have negligible mass.

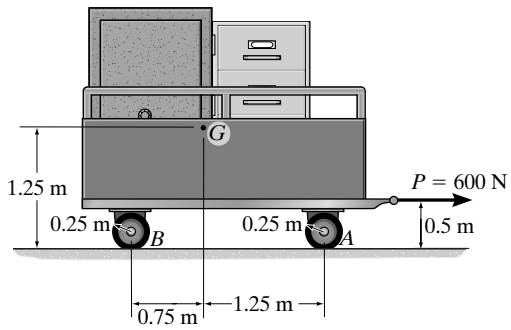

Equations of Motion: Writing the force equation of motion along the x axis,

$\overset{+}{\rightarrow} \Sigma F_x = m(a_G)_x$; $\quad 600 = 150a \qquad a = 4 \text{ m/s}^2 \rightarrow$ **Ans.**

Using this result to write the moment equation about point A,

$\circlearrowleft + \Sigma M_A = (M_k)_A$; $\quad 150(9.81)(1.25) - 600(0.5) - N_B(2) = -150(4)(1.25)$

$N_B = 1144.69 \text{ N} = 1.14 \text{ kN}$ **Ans.**

Using this result to write the force equation of motion along the y axis,

$+\uparrow \Sigma F_y = m(a_G)_y$; $\quad N_A + 1144.69 - 150(9.81) = 150(0)$

$N_A = 326.81 \text{ N} = 327 \text{ N}$ **Ans.**

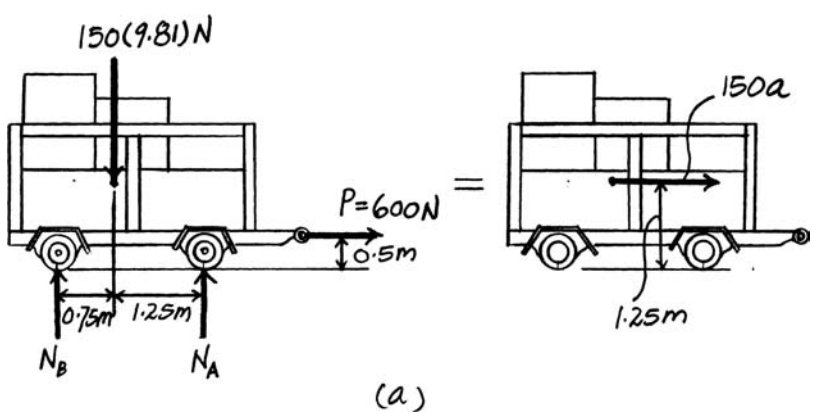

© 2010 Pearson Education, Inc., Upper Saddle River, NJ. All rights reserved. This material is protected under all copyright laws as they currently exist. No portion of this material may be reproduced, in any form or by any means, without permission in writing from the publisher.

***17–52.** The 50-kg uniform crate rests on the platform for which the coefficient of static friction is $\mu_s = 0.5$. If the supporting links have an angular velocity $\omega = 1$ rad/s, determine the greatest angular acceleration α they can have so that the crate does not slip or tip at the instant $\theta = 30°$.

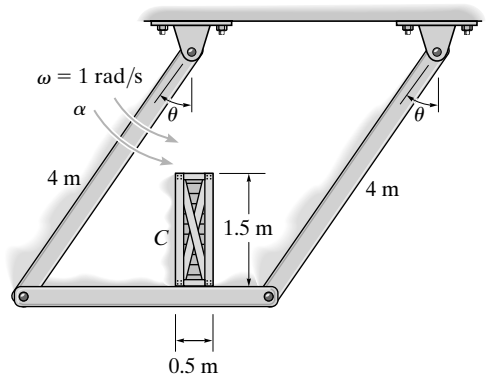

Curvilinear Translation:

$(a_G)_n = (1)^2(4) = 4 \text{ m/s}^2$

$(a_G)_t = \alpha(4) \text{ m/s}^2$

$\overset{+}{\rightarrow} \Sigma F_x = m(a_G)_x; \qquad F_C = 50(4)\sin 30° + 50(\alpha)(4)\cos 30°$

$+\uparrow \Sigma F_y = m(a_G)_y; \qquad N_C - 50(9.81) = 50(4)\cos 30° - 50(\alpha)(4)\sin 30°$

$\circlearrowleft + \Sigma M_G = \Sigma(M_k)_G; \qquad N_C(x) - F_C(0.75) = 0$

Assume crate is about to slip. $F_C = 0.5N_C$

Thus,

$$x = 0.375 \text{ m} > 0.25 \text{ m}$$

Crate must tip. Set $x = 0.25$ m.

$$N_C = 605 \text{ N} \qquad F_C = 202 \text{ N}$$

$$\alpha = 0.587 \text{ rad/s}^2 \qquad \textbf{Ans.}$$

Note: $(F_C)_{\max} = 0.5(605) = 303 \text{ N} > 202 \text{ N}$ **O.K.**

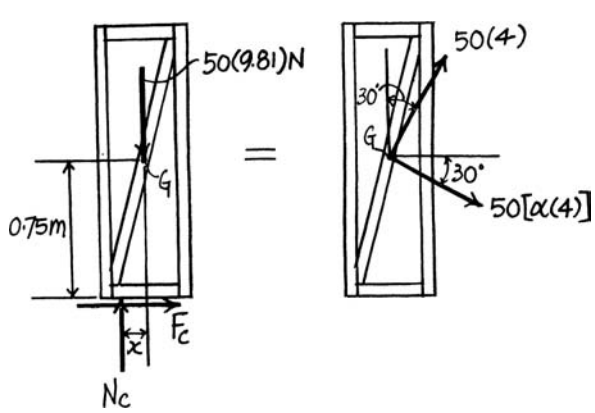

© 2010 Pearson Education, Inc., Upper Saddle River, NJ. All rights reserved. This material is protected under all copyright laws as they currently exist. No portion of this material may be reproduced, in any form or by any means, without permission in writing from the publisher.

•17–53. The 50-kg uniform crate rests on the platform for which the coefficient of static friction is $\mu_s = 0.5$. If at the instant $\theta = 30°$ the supporting links have an angular velocity $\omega = 1$ rad/s and angular acceleration $\alpha = 0.5$ rad/s^2, determine the frictional force on the crate.

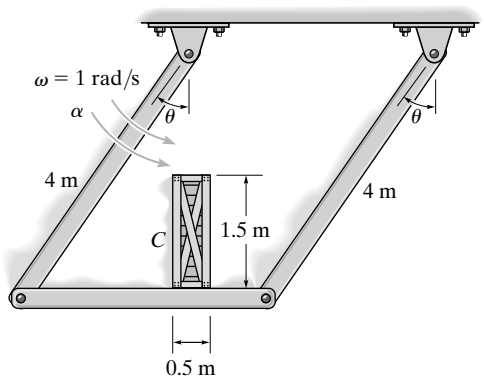

Curvilinear Translation:

$(a_G)_n = (1)^2(4) = 4 \text{ m/s}^2$

$(a_G)_t = 0.5(4) \text{ m/s}^2 = 2 \text{ m/s}^2$

$\overset{+}{\rightarrow} \Sigma F_x = m(a_G)_x; \qquad F_C = 50(4)\sin 30° + 50(2)\cos 30°$

$+\uparrow \Sigma F_y = m(a_G)_y; \qquad N_C - 50(9.81) = 50(4)\cos 30° - 50(2)\sin 30°$

Solving,

$F_C = 186.6 \text{ N}$

$N_C = 613.7 \text{ N}$

$(F_C)_{\max} = 0.5(613.7) = 306.9 \text{ N} > 186.6 \text{ N}$ **OK**

$\circlearrowleft + \Sigma M_G = \Sigma (M_k)_G; \qquad N_C(x) - F_C(0.75) = 0$

$613.7(x) - 186.6(0.75) = 0$

$x = 0.228 \text{ m} < 0.25 \text{ m}$ **OK**

Thus, $F_C = 187$ N **Ans.**

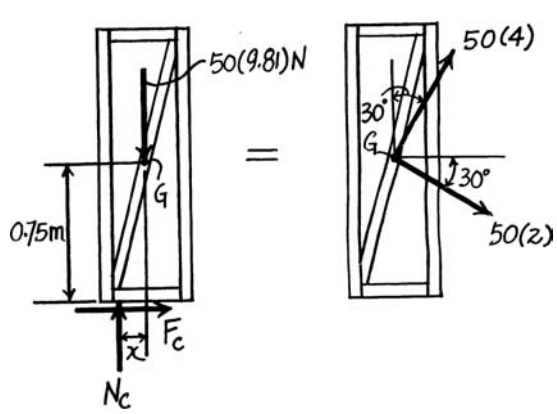

© 2010 Pearson Education, Inc., Upper Saddle River, NJ. All rights reserved. This material is protected under all copyright laws as they currently exist. No portion of this material may be reproduced, in any form or by any means, without permission in writing from the publisher.

17–54. If the hydraulic cylinder BE exerts a vertical force of $F = 1.5$ kN on the platform, determine the force developed in links AB and CD at the instant $\theta = 90°$. The platform is at rest when $\theta = 45°$. Neglect the mass of the links and the platform. The 200-kg crate does not slip on the platform.

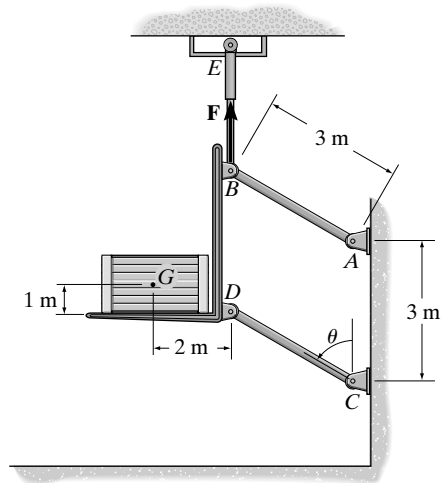

Equations of Motion: The free-body diagram of the crate and platform at the general position is shown in Fig. *a*. Here, $(a_G)_t = \alpha r = \alpha(3)$ and $(a_G)_n = \omega^2 r = \omega^2(3)$, where ω and α are the angular velocity and acceleration of the links. Writing the force equation of motion along the t axis by referring to Fig. *a*, we have

$$+\nearrow \Sigma F_t = m(a_G)_t; \qquad 200(9.81)\sin\theta - 1500\sin\theta = 200\left[\alpha(3)\right]$$

$$\alpha = 0.77\sin\theta$$

Kinematics: Using this result, the angular velocity of the links can be obtained by integrating

$$\int \omega\, d\omega = \int \alpha\, d\theta$$

$$\int_0^{\omega} \omega\, d\omega = \int_{45°}^{\theta} 0.77\sin\theta\, d\theta$$

$$\omega = \sqrt{1.54(0.7071 - \cos\theta)}$$

When $\theta = 90°$, $\omega = 1.044$ rad/s. Referring to the free-body diagram of the crate and platform when $\theta = 90°$, Fig. *b*,

$$\overset{+}{\rightarrow} \Sigma F_n = m(a_G)_n; \qquad F_{AB} - F_{CD} = 200\left[1.044^2(3)\right] \qquad \textbf{(1)}$$

$$\circlearrowleft + \Sigma M_G = 0; \qquad 1500(2) - F_{AB}(2) - F_{CD}(1) = 0 \qquad \textbf{(2)}$$

Solving Eqs. (1) and (2) yields

$$F_{AB} = 1217.79\text{ N} = 1.22\text{ kN} \qquad F_{CD} = 564.42\text{ N} = 564\text{N} \qquad \textbf{Ans.}$$

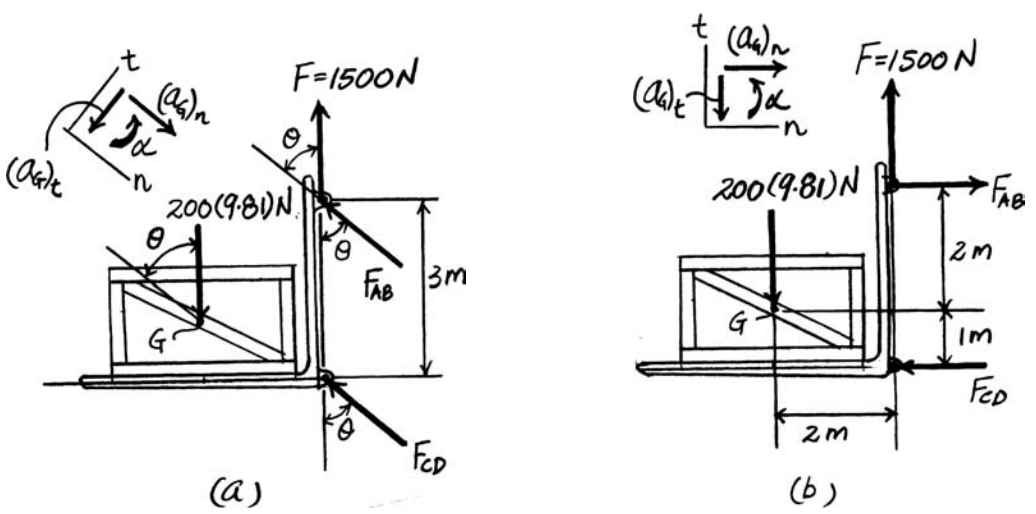

© 2010 Pearson Education, Inc., Upper Saddle River, NJ. All rights reserved. This material is protected under all copyright laws as they currently exist. No portion of this material may be reproduced, in any form or by any means, without permission in writing from the publisher.

17–55. A uniform plate has a weight of 50 lb. Link AB is subjected to a couple moment of $M = 10\ \text{lb}\cdot\text{ft}$ and has a clockwise angular velocity of $2\ \text{rad/s}$ at the instant $\theta = 30°$. Determine the force developed in link CD and the tangential component of the acceleration of the plate's mass center at this instant. Neglect the mass of links AB and CD.

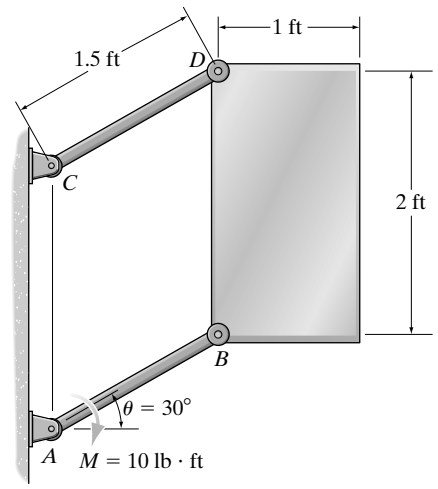

Equations of Motion: Since the plate undergoes the cantilever translation, $(a_G)_n = (2^2)(1.5) = 6\ \text{ft/s}^2$. Referring to the free-body diagram of the plate shown in Fig. a,

$$\Sigma F_n = m(a_G)_n; \qquad -F_{CD} - B_x \cos 30° - B_y \sin 30° + 50 \sin 30° = \left(\frac{50}{32.2}\right)(6) \quad \textbf{(1)}$$

$$\Sigma F_t = m(a_G)_t; \qquad B_x \sin 30° - B_y \cos 30° + 50 \cos 30° = \frac{50}{32.2}(a_G)_t \quad \textbf{(2)}$$

$$\circlearrowleft + \Sigma M_G = 0; \qquad B_x(1) - B_y(0.5) - F_{CD}\cos 30°(1) - F_{CD}\sin 30°(0.5) = 0 \quad \textbf{(3)}$$

Since the mass of link AB can be neglected, we can apply the moment equation of equilibrium to link AB. Referring to its free-body diagram, Fig. b,

$$\circlearrowleft + \Sigma M_A = 0; \qquad B_x(1.5 \sin 30°) - B_y(1.5 \cos 30°) - 10 = 0 \quad \textbf{(4)}$$

Solving Eqs. (1) through (4) yields

$B_x = 8.975\ \text{lb}$ $\qquad$ $B_y = -2.516\ \text{lb}$

$F_{CD} = 9.169\ \text{lb} = 9.17\ \text{lb}$ **Ans.**

$(a_G)_t = 32.18\ \text{ft/s}^2 = 32.2\ \text{ft/s}^2$ **Ans.**

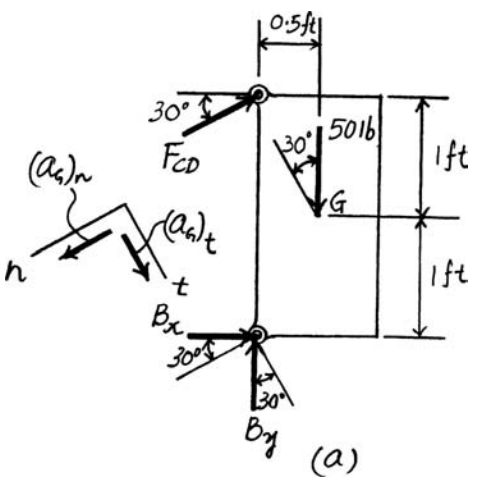

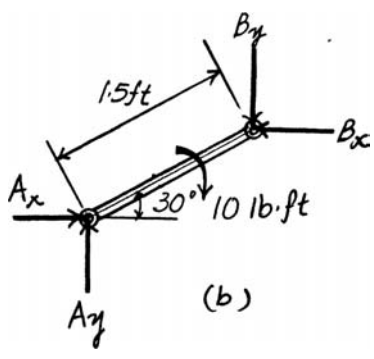

© 2010 Pearson Education, Inc., Upper Saddle River, NJ. All rights reserved. This material is protected under all copyright laws as they currently exist. No portion of this material may be reproduced, in any form or by any means, without permission in writing from the publisher.

***17–56.** The four fan blades have a total mass of 2 kg and moment of inertia $I_O = 0.18\ \text{kg}\cdot\text{m}^2$ about an axis passing through the fan's center O. If the fan is subjected to a moment of $M = 3(1 - e^{-0.2t})\ \text{N}\cdot\text{m}$, where t is in seconds, determine its angular velocity when $t = 4$ s starting from rest.

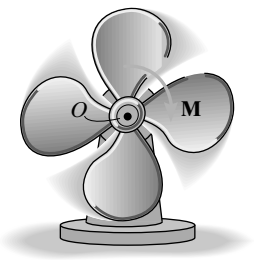

$$\circlearrowleft + \Sigma M_O = I_O\alpha; \qquad 3\left(1 - e^{-0.2t}\right) = 0.18\alpha$$

$$\alpha = 16.67\left(1 - e^{-0.2t}\right)$$

$$d\omega = \alpha\, dt$$

$$\int_0^{\omega} d\omega = \int_0^4 16.67\left(1 - e^{-0.2t}\right) dt$$

$$\omega = 16.67\left[t + \frac{1}{0.2}e^{-0.2t}\right]_0^4$$

$$\omega = 20.8\ \text{rad/s} \qquad \textbf{Ans.}$$

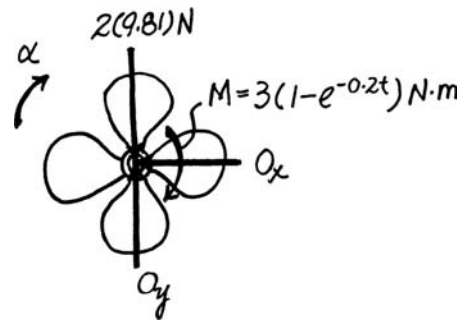

•17–57. Cable is unwound from a spool supported on small rollers at A and B by exerting a force of $T = 300$ N on the cable in the direction shown. Compute the time needed to unravel 5 m of cable from the spool if the spool and cable have a total mass of 600 kg and a centroidal radius of gyration of $k_O = 1.2$ m. For the calculation, neglect the mass of the cable being unwound and the mass of the rollers at A and B. The rollers turn with no friction.

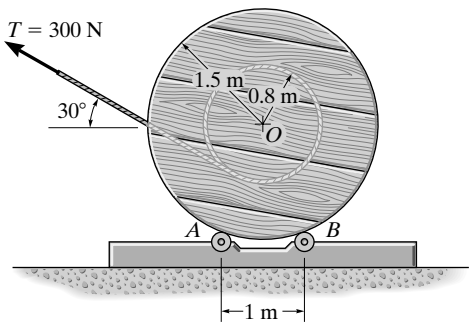

Equations of Motion: The mass moment of inertia of the spool about point O is given by $I_O = mk_O^2 = 600\left(1.2^2\right) = 864\ \text{kg}\cdot\text{m}^2$. Applying Eq. 17–16, we have

$$\circlearrowright + \Sigma M_O = I_O\,\alpha; \qquad -300(0.8) = -864\alpha \qquad \alpha = 0.2778\ \text{rad/s}^2$$

Kinematics: Here, the angular displacement $\theta = \dfrac{s}{r} = \dfrac{5}{0.8} = 6.25$ rad. Applying equation $\theta = \theta_0 + \omega_0 t + \dfrac{1}{2}\alpha t^2$, we have

$$(\circlearrowleft +) \qquad 6.25 = 0 + 0 + \frac{1}{2}(0.2778)t^2$$

$$t = 6.71\ \text{s} \qquad \textbf{Ans.}$$

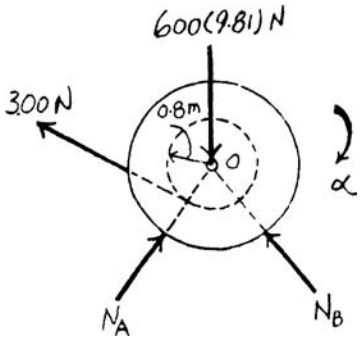

© 2010 Pearson Education, Inc., Upper Saddle River, NJ. All rights reserved. This material is protected under all copyright laws as they currently exist. No portion of this material may be reproduced, in any form or by any means, without permission in writing from the publisher.

17–58. The single blade PB of the fan has a mass of 2 kg and a moment of inertia $I_G = 0.18\ \text{kg}\cdot\text{m}^2$ about an axis passing through its center of mass G. If the blade is subjected to an angular acceleration $\alpha = 5\ \text{rad/s}^2$, and has an angular velocity $\omega = 6\ \text{rad/s}$ when it is in the vertical position shown, determine the internal normal force N, shear force V, and bending moment M, which the hub exerts on the blade at point P.

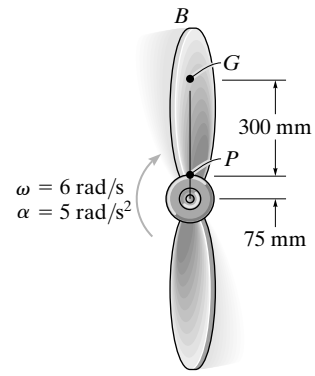

Equations of Motion: Here, $(a_G)_t = \alpha r_G = 5(0.375) = 1.875\ \text{m/s}^2$ and $(a_G)_n = \omega^2 r_G = 6^2(0.375) = 13.5\ \text{m/s}^2$.

$\circlearrowleft + \Sigma M_P = \Sigma (M_k)_P;\qquad -M_P = -0.18(5) - 2(1.875)(0.3)$

$$M_P = 2.025\ \text{N}\cdot\text{m} \qquad \textbf{Ans.}$$

$\Sigma F_n = m(a_G)_n;\qquad N_P + 2(9.81) = 2(13.5)$

$$N_P = 7.38\ \text{N} \qquad \textbf{Ans.}$$

$\Sigma F_t = m(a_G)_t;\qquad V_P = 2(1.875) = 3.75\ \text{N} \qquad \textbf{Ans.}$

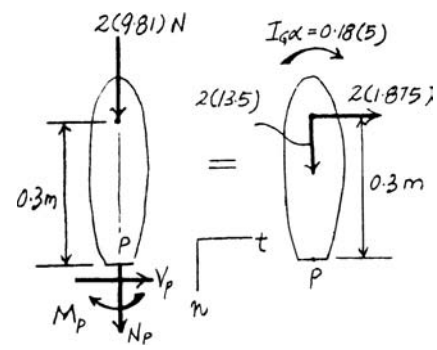

17–59. The uniform spool is supported on small rollers at A and B. Determine the constant force **P** that must be applied to the cable in order to unwind 8 m of cable in 4 s starting from rest. Also calculate the normal forces on the spool at A and B during this time. The spool has a mass of 60 kg and a radius of gyration about O of $k_O = 0.65$ m. For the calculation neglect the mass of the cable and the mass of the rollers at A and B.

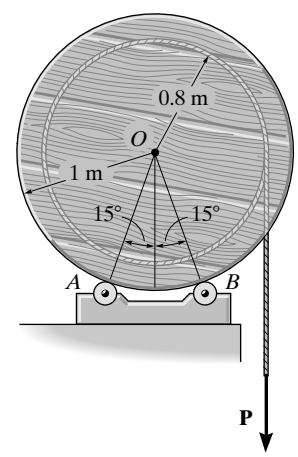

$(\downarrow +)\ s = s_0 + v_0 t + \frac{1}{2} a_c t^2$

$8 = 0 + 0 + \frac{1}{2} a_c (4)^2$

$a_c = 1\ \text{m/s}^2$

$\alpha = \frac{1}{0.8} = 1.25\ \text{rad/s}^2$

$\circlearrowright + \Sigma M_O = I_O \alpha;\qquad P(0.8) = 60(0.65)^2(1.25)$

$$P = 39.6\ \text{N} \qquad \textbf{Ans.}$$

$\overset{+}{\rightarrow} \Sigma F_x = ma_x;\qquad N_A \sin 15° - N_B \sin 15° = 0$

$+\uparrow \Sigma F_y = ma_y;\qquad N_A \cos 15° + N_B \cos 15° - 39.6 - 588.6 = 0$

$$N_A = N_B = 325\ \text{N} \qquad \textbf{Ans.}$$

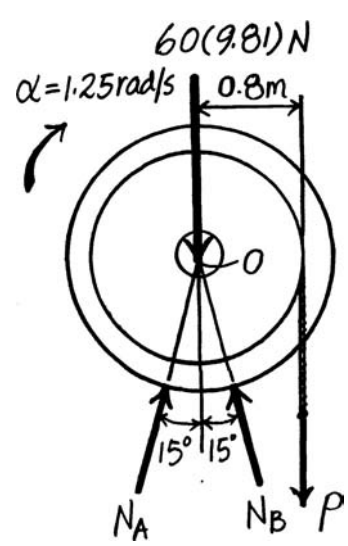

© 2010 Pearson Education, Inc., Upper Saddle River, NJ. All rights reserved. This material is protected under all copyright laws as they currently exist. No portion of this material may be reproduced, in any form or by any means, without permission in writing from the publisher.

***17–60.** A motor supplies a constant torque $M = 2\ \text{N}\cdot\text{m}$ to a 50-mm-diameter shaft O connected to the center of the 30-kg flywheel. The resultant bearing friction **F**, which the bearing exerts on the shaft, acts tangent to the shaft and has a magnitude of 50 N. Determine how long the torque must be applied to the shaft to increase the flywheel's angular velocity from 4 rad/s to 15 rad/s. The flywheel has a radius of gyration $k_O = 0.15$ m about its center O.

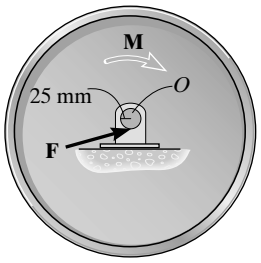

$\circlearrowleft + \Sigma M_O = I_O\,\alpha;\qquad 2 - 50(0.025) = 30(0.15)^2\alpha$

$$\alpha = 1.11\ \text{rad/s}^2$$

$\circlearrowleft +\qquad \omega = \omega_0 + \alpha_c\, t$

$$15 = 4 + (1.11)t$$

$$t = 9.90\ \text{s}$$ **Ans.**

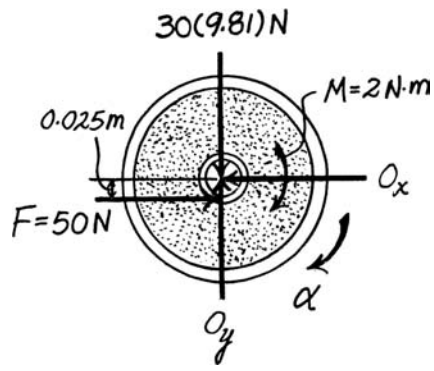

•17–61. If the motor in Prob. 17–60 is disengaged from the shaft once the flywheel is rotating at 15 rad/s, so that $M = 0$, determine how long it will take before the resultant bearing frictional force $F = 50$ N stops the flywheel from rotating.

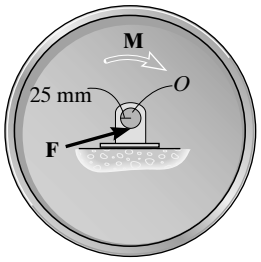

$\circlearrowleft + \Sigma M_O = I_O\,\alpha;\qquad 50(0.025) = 30(0.15)^2\alpha$

$$\alpha = 1.852\ \text{rad/s}^2$$

$\circlearrowleft +\qquad \omega = \omega_0 + \alpha_c\, t$

$$0 = -15 + (1.852)t$$

$$t = 8.10\ \text{s}$$ **Ans.**

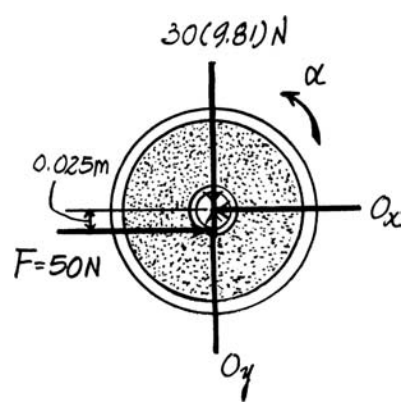

© 2010 Pearson Education, Inc., Upper Saddle River, NJ. All rights reserved. This material is protected under all copyright laws as they currently exist. No portion of this material may be reproduced, in any form or by any means, without permission in writing from the publisher.

17–62. The pendulum consists of a 30-lb sphere and a 10-lb slender rod. Compute the reaction at the pin O just after the cord AB is cut.

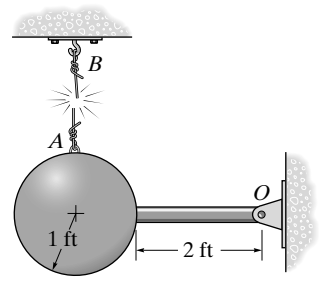

Mass Moment Inertia: From the inside back cover of the text.

$$(I_G)_S = \frac{2}{5}mr^2 = \frac{2}{5}\left(\frac{30}{32.2}\right)(1^2) = 0.3727 \text{ slug}\cdot\text{ft}^2$$

$$(I_G)_R = \frac{1}{12}ml^2 = \frac{1}{12}\left(\frac{10}{32.2}\right)(2^2) = 0.1035 \text{ slug}\cdot\text{ft}^2$$

Equations of Motion: At the instant shown, the normal component of acceleration of the mass center for the sphere and the rod are $\left[(a_G)_n\right]_S = \left[(a_G)_n\right]_R = 0$ since the angular velocity of the pendulum $\omega = 0$ at that instant. The tangential component of acceleration of the mass center for the sphere and the rod are $\left[(a_G)_t\right]_S = \alpha r_S = 3\alpha$ and $\left[(a_G)_t\right]_R = \alpha r_R = \alpha$.

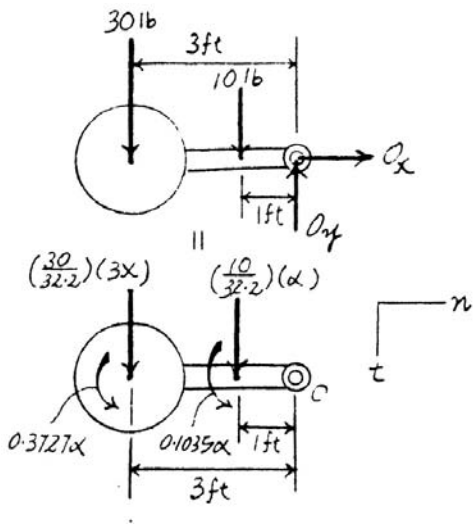

$\circlearrowleft + \Sigma M_O = \Sigma(M_k)_O$; $\quad 30(3) + 10(1) = 0.3727\alpha + 0.1035\alpha$

$$+ \left(\frac{30}{32.2}\right)(3\alpha)(3) + \left(\frac{10}{32.2}\right)(\alpha)(1)$$

$$\alpha = 10.90 \text{ rad/s}^2$$

$\Sigma F_n = m(a_G)_n$; $\quad O_x = 0$

$\Sigma F_t = m(a_G)_t$; $\quad 30 + 10 - O_y = \left(\frac{30}{32.2}\right)[3(10.90)] + \left(\frac{10}{32.2}\right)(10.90)$

$$O_y = 6.140 \text{ lb}$$

Thus,

$$F_O = \sqrt{O_x^2 + O_y^2} = \sqrt{0^2 + 6.140^2} = 6.14 \text{ lb} \qquad \textbf{Ans.}$$

17–63. The 4-kg slender rod is supported horizontally by a spring at A and a cord at B. Determine the angular acceleration of the rod and the acceleration of the rod's mass center at the instant the cord at B is cut. *Hint:* The stiffness of the spring is not needed for the calculation.

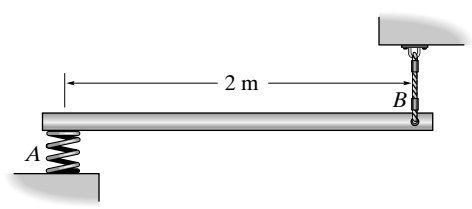

Since the deflection of the spring is unchanged at the instant the cord is cut, the reaction at A is

$$F_A = \frac{4}{2}(9.81) = 19.62 \text{ N}$$

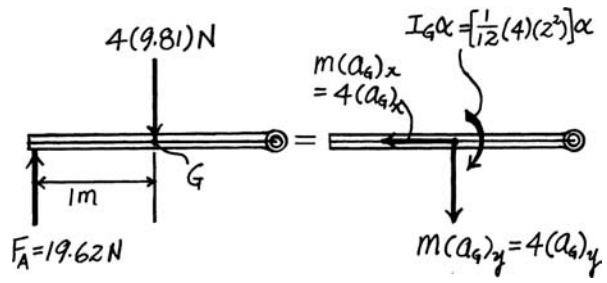

$\overset{+}{\leftarrow} \Sigma F_x = m(a_G)_x$; $\quad 0 = 4(a_G)_x$

$+\downarrow \Sigma F_y = m(a_G)_y$; $\quad 4(9.81) - 19.62 = 4(a_G)_y$

$\circlearrowright + \Sigma M_G = I_G\alpha$; $\quad (19.62)(1) = \left[\frac{1}{12}(4)(2)^2\right]\alpha$

Solving:

$$(a_G)_x = 0$$

$$(a_G)_y = 4.905 \text{ m/s}^2$$

$$\alpha = 14.7 \text{ rad/s}^2 \qquad \textbf{Ans.}$$

Thus,

$$(a_G) = 4.90 \text{ m/s}^2 \qquad \textbf{Ans.}$$

© 2010 Pearson Education, Inc., Upper Saddle River, NJ. All rights reserved. This material is protected under all copyright laws as they currently exist. No portion of this material may be reproduced, in any form or by any means, without permission in writing from the publisher.

***17–64.** The passengers, the gondola, and its swing frame have a total mass of 50 Mg, a mass center at G, and a radius of gyration $k_B = 3.5$ m. Additionally, the 3-Mg steel block at A can be considered as a point of concentrated mass. Determine the horizontal and vertical components of reaction at pin B if the gondola swings freely at $\omega = 1$ rad/s when it reaches its lowest point as shown. Also, what is the gondola's angular acceleration at this instant?

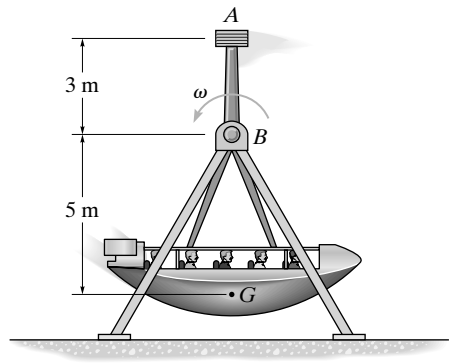

Equations of Motion: The mass moment of inertia of the gondola and the counter weight about point B is given by $I_B = m_g k_B^2 + m_W r_W^2 = 50(10^3)(3.5^2) + 3(10^3)(3^2) = 639.5(10^3)\ \text{kg}\cdot\text{m}^2$. At the instant shown, the normal component of acceleration of the mass center for the gondola and the counter weight are $[(a_G)_n]_g = \omega^2 r_g = 1^2(5) = 5.00\ \text{m/s}^2$ and $[(a_G)_n]_W = \omega^2 r_W = 1^2(3) = 3.00\ \text{m/s}^2$. The tangential component of acceleration of the mass center for the gondola and the counter weight are $[(a_G)_t]_g = \alpha r_g = 5\alpha$ and $[(a_G)_t]_W = \alpha r_W = 3\alpha$. Applying Eq. 17–16, we have

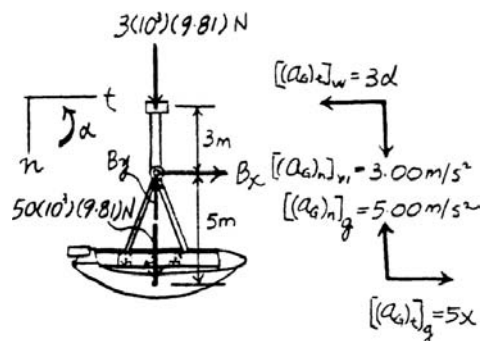

$\circlearrowleft + \Sigma M_B = I_B\,\alpha;\qquad 0 = 639.5(10^3)\alpha \qquad \alpha = 0$ **Ans.**

$\Sigma F_t = m(a_G)_t;\qquad B_x = 0$ **Ans.**

$\Sigma F_n = m(a_G)_n;\qquad 3(10^3)(9.81) + 50(10^3)(9.81) - B_y$

$= 3(10^3)(3.00) - 50(10^3)(5.00)$

$B_y = 760.93(10^3)\ \text{N} = 761\ \text{kN}$ **Ans.**

•17–65. The passengers, the gondola, and its swing frame have a total mass of 50 Mg, a mass center at G, and a radius of gyration $k_B = 3.5$ m. Additionally, the 3-Mg steel block at A can be considered as a point of concentrated mass. Determine the angle θ to which the gondola will swing before it stops momentarily, if it has an angular velocity of $\omega = 1$ rad/s at its lowest point.

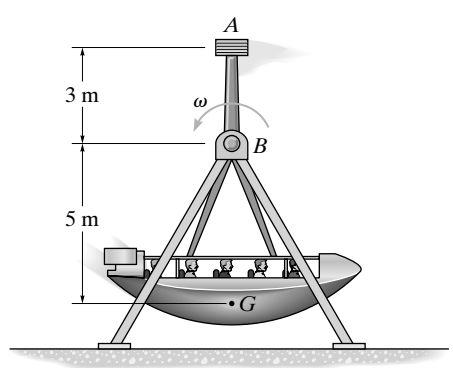

Equations of Motion: The mass moment of inertia of the gondola and the counter weight about point B is given by $I_B = m_g k_B^2 + m_W r_W^2 = 50(10^3)(3.5^2) + 3(10^3)(3^2) = 639.5(10^3)\ \text{kg}\cdot\text{m}^2$. Applying Eq. 17–16, we have

$\circlearrowleft + \Sigma M_B = I_B\,\alpha;\qquad 3(10^3)(9.81)\sin\theta(3)$

$-50(10^3)(9.81)\sin\theta(5) = 639.5(10^3)\,\alpha$

$\alpha = -3.6970\sin\theta$

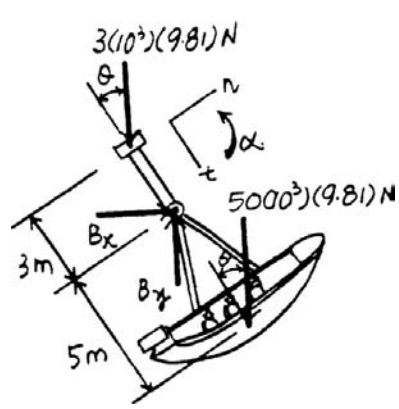

Kinematics: Applying equation $\omega\,d\omega = \alpha\,d\theta$, we have

$$\int_{1\,\text{rad/s}}^{0} \omega\,d\omega = \int_{0^\circ}^{\theta} -3.6970\sin\theta\,d\theta$$

$\theta = 30.1^\circ$ **Ans.**

© 2010 Pearson Education, Inc., Upper Saddle River, NJ. All rights reserved. This material is protected under all copyright laws as they currently exist. No portion of this material may be reproduced, in any form or by any means, without permission in writing from the publisher.

17–66. The kinetic diagram representing the general rotational motion of a rigid body about a fixed axis passing through O is shown in the figure. Show that $I_G\boldsymbol{\alpha}$ may be eliminated by moving the vectors $m(\mathbf{a}_G)_t$ and $m(\mathbf{a}_G)_n$ to point P, located a distance $r_{GP} = k_G^2/r_{OG}$ from the center of mass G of the body. Here k_G represents the radius of gyration of the body about an axis passing through G. The point P is called the *center of percussion* of the body.

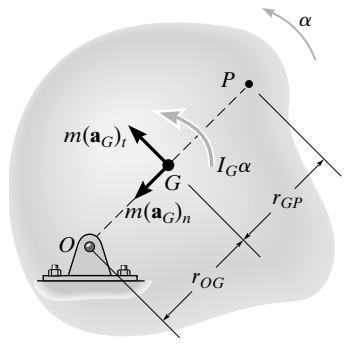

$$m(a_G)_t\, r_{OG} + I_G\,\alpha = m(a_G)_t\, r_{OG} + \left(mk_G^2\right)\alpha$$

However,

$$k_G^2 = r_{OG}\, r_{GP} \text{ and } \alpha = \frac{(a_G)_t}{r_{OG}}$$

$$m(a_G)_t\, r_{OG} + I_G\,\alpha = m(a_G)_t\, r_{OG} + (mr_{OG}\, r_{GP})\left[\frac{(a_G)_t}{r_{OG}}\right]$$

$$= m(a_G)_t(r_{OG} + r_{GP}) \qquad \textbf{Q.E.D.}$$

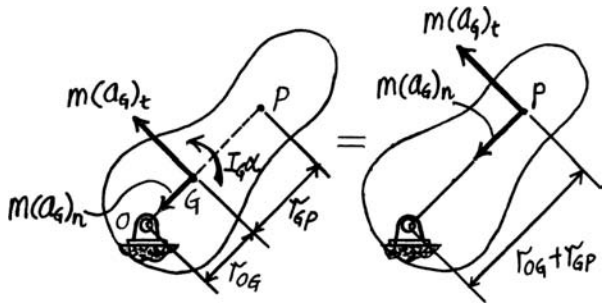

17–67. Determine the position r_P of the center of percussion P of the 10-lb slender bar. (See Prob. 17–66.) What is the horizontal component of force that the pin at A exerts on the bar when it is struck at P with a force of $F = 20$ lb?

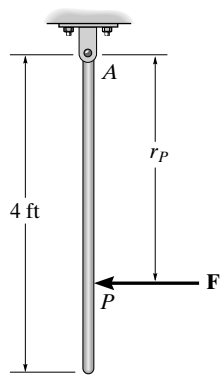

Using the result of Prob 17–66,

$$r_{GP} = \frac{k_G^2}{r_{AG}} = \frac{\left[\sqrt{\frac{1}{12}\left(\frac{ml^2}{m}\right)}\right]^2}{\frac{l}{2}} = \frac{1}{6}\,l$$

Thus,

$$r_P = \frac{1}{6}\,l + \frac{1}{2}\,l = \frac{2}{3}\,l = \frac{2}{3}(4) = 2.67 \text{ ft} \qquad \textbf{Ans.}$$

$$\circlearrowleft + \Sigma M_A = I_A\,\alpha; \qquad 20(2.667) = \left[\frac{1}{3}\left(\frac{10}{32.2}\right)(4)^2\right]\alpha$$

$$\alpha = 32.2 \text{ rad/s}^2$$

$$(a_G)_t = 2(32.2) = 64.4 \text{ ft/s}^2$$

$$\overset{+}{\leftarrow} \Sigma F_x = m(a_G)_x; \qquad -A_x + 20 = \left(\frac{10}{32.2}\right)(64.4)$$

$$A_x = 0 \qquad \textbf{Ans.}$$

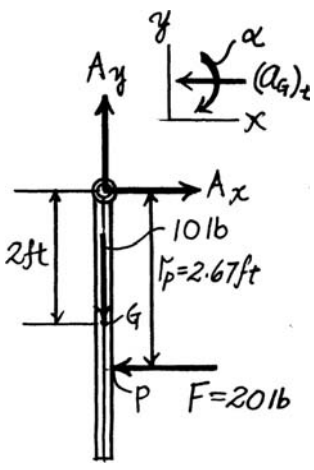

© 2010 Pearson Education, Inc., Upper Saddle River, NJ. All rights reserved. This material is protected under all copyright laws as they currently exist. No portion of this material may be reproduced, in any form or by any means, without permission in writing from the publisher.

***17–68.** The 150-kg wheel has a radius of gyration about its center of mass O of $k_O = 250$ mm. If it rotates counterclockwise with an angular velocity of $\omega = 1200$ rev/min at the instant the tensile forces $T_A = 2000$ N and $T_B = 1000$ N are applied to the brake band at A and B, determine the time needed to stop the wheel.

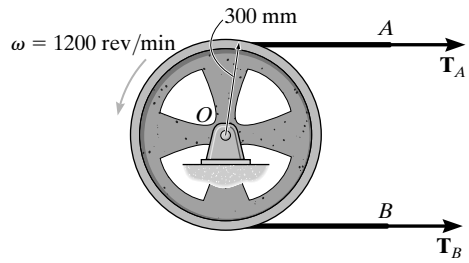

Equations of Motion: Here, the mass moment of inertia of the flywheel about its mass center O is $I_O = mk_O{}^2 = 150\left(0.25^2\right) = 9.375\ \text{kg}\cdot\text{m}^2$. Referring to the free-body diagram of the flywheel in Fig. b, we have

$$\circlearrowleft + \Sigma M_O = I_O\alpha; \qquad 1000(0.3) - 2000(0.3) = -9.375\alpha \qquad \alpha = 32\ \text{rad/s}^2$$

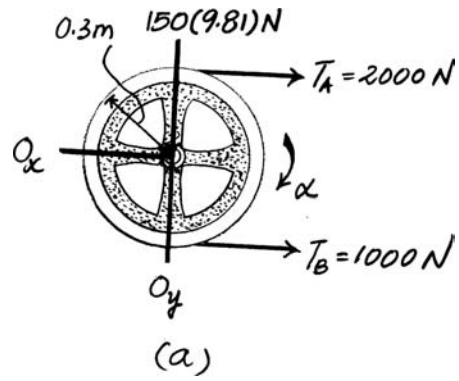

Kinematics: Here, $\omega_0 = \left(1200\,\dfrac{\text{rev}}{\text{min}}\right)\left(\dfrac{2\pi\ \text{rad}}{1\ \text{rev}}\right)\left(\dfrac{1\ \text{min}}{60\ \text{s}}\right) = 40\pi$ rad. Since the angular acceleration is constant, we can apply

$$\circlearrowleft + \qquad \omega = \omega_0 + \alpha_c t$$

$$0 = 40\pi + (-32)t$$

$$t = 3.93\ \text{s} \qquad \textbf{Ans.}$$

•17–69. The 150-kg wheel has a radius of gyration about its center of mass O of $k_O = 250$ mm. If it rotates counterclockwise with an angular velocity of $\omega = 1200$ rev/min and the tensile force applied to the brake band at A is $T_A = 2000$ N, determine the tensile force $\mathbf{T}_B$ in the band at B so that the wheel stops in 50 revolutions after $\mathbf{T}_A$ and $\mathbf{T}_B$ are applied.

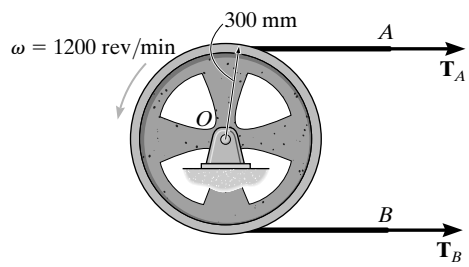

Kinematics: Here, $\omega_0 = \left(1200\,\dfrac{\text{rev}}{\text{min}}\right)\left(\dfrac{2\pi\ \text{rad}}{1\ \text{rev}}\right)\left(\dfrac{1\ \text{min}}{60\ \text{s}}\right) = 40\pi$ rad and

$$\theta = (50\ \text{rev})$$

$$\left(\frac{2\pi\ \text{rad}}{1\ \text{rev}}\right) = 100\pi\text{rad}$$

Since the angular acceleration is constant,

$$\circlearrowleft + \qquad \omega^2 = \omega_0{}^2 + 2\alpha(\theta - \theta_0)$$

$$0 = (40\pi)^2 + 2\alpha(100\pi - 0)$$

$$\alpha = -25.13\ \text{rad/s}^2 = 25.13\ \text{rad/s}^2$$

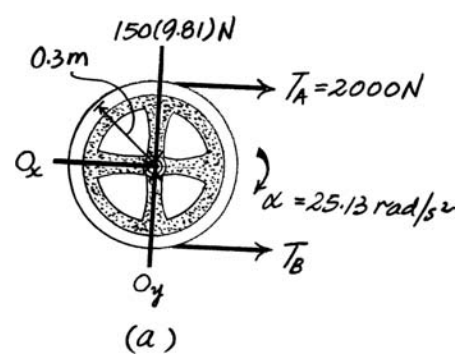

Equations of Motion: Here, the mass moment of inertia of the flywheel about its mass center O is $I_O = mk_O{}^2 = 150\left(0.25^2\right) = 9.375\ \text{kg}\cdot\text{m}^2$. Referring to the free-body diagram of the flywheel,

$$\circlearrowleft + \Sigma M_O = I_O\alpha; \qquad T_B(0.3) - 2000(0.3) = -9.375(25.13)$$

$$T_B = 1214.60\ \text{N} = 1.21\ \text{kN} \qquad \textbf{Ans.}$$

© 2010 Pearson Education, Inc., Upper Saddle River, NJ. All rights reserved. This material is protected under all copyright laws as they currently exist. No portion of this material may be reproduced, in any form or by any means, without permission in writing from the publisher.

17–70. The 100-lb uniform rod is at rest in a vertical position when the cord attached to it at B is subjected to a force of $P = 50$ lb. Determine the rod's initial angular acceleration and the magnitude of the reactive force that pin A exerts on the rod. Neglect the size of the smooth peg at C.

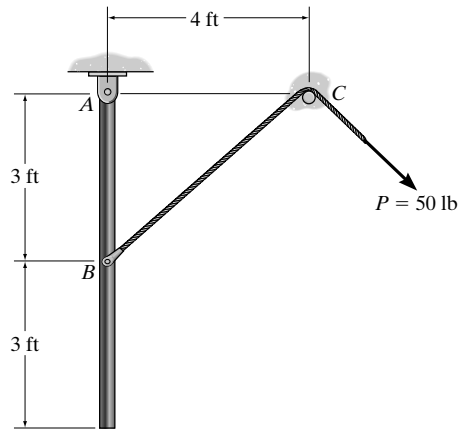

Equations of Motion: Since the rod rotates about a fixed axis passing through point A, $(a_G)_t = \alpha r_G = \alpha(3)$ and $(a_G)_n = \omega^2 r_G = 0$. The mass moment of inertia of the rod about G is $I_G = \frac{1}{12}\left(\frac{100}{32.2}\right)(6^2) = 9.317 \text{ slug}\cdot\text{ft}^2$. Writing the moment equation of motion about point A,

$$\circlearrowleft + \Sigma M_A = (M_k)_A; \qquad 50\left(\frac{4}{5}\right)(3) = \frac{100}{32.2}\left[\alpha(3)\right](3) + 9.317\alpha$$

$$\alpha = 3.220 \text{ rad/s}^2 = 3.22 \text{ rad/s}^2 \qquad \textbf{Ans.}$$

This result can also be obtained by applying $\Sigma M_A = I_A\alpha$, where

$$I_A = 9.317 + \left(\frac{100}{32.2}\right)(3^2) = 37.267 \text{ slug}\cdot\text{ft}^2$$

Thus,

$$\circlearrowleft + \Sigma M_A = I_A\,\alpha; \qquad 50\left(\frac{4}{5}\right)(3) = 37.267\alpha$$

$$\alpha = 3.220 \text{ rad/s}^2 = 3.22 \text{ rad/s}^2 \qquad \textbf{Ans.}$$

Using this result to write the force equation of motion along the n and t axes,

$$+\uparrow \Sigma F_n = m(a_G)_n; \qquad A_n + 50\left(\frac{3}{5}\right) - 100 = \frac{100}{32.2}(0) \qquad A_n = 70 \text{ lb}$$

$$\overset{+}{\rightarrow} \Sigma F_t = m(a_G)_t; \qquad 50\left(\frac{4}{5}\right) - A_t = \frac{100}{32.2}\left[3.220(3)\right] \qquad A_t = 10.0 \text{ lb}$$

Thus,

$$F_A = \sqrt{A_t^{\,2} + A_n^{\,2}} = \sqrt{10^2 + 70^2} = 70.7 \text{ lb} \qquad \textbf{Ans.}$$

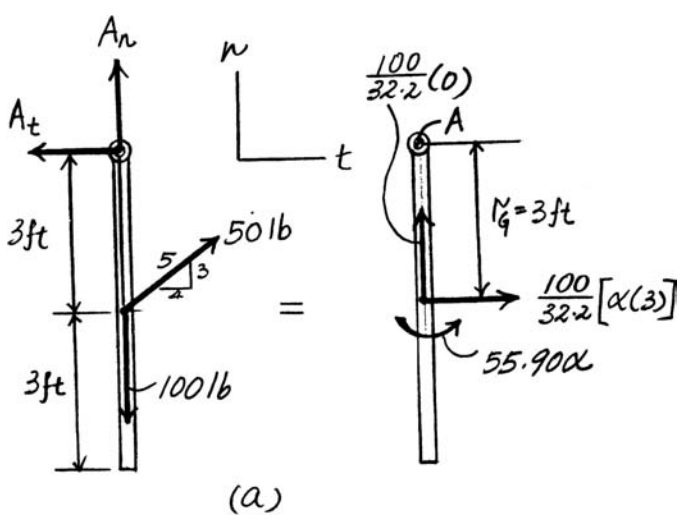

(a)

© 2010 Pearson Education, Inc., Upper Saddle River, NJ. All rights reserved. This material is protected under all copyright laws as they currently exist. No portion of this material may be reproduced, in any form or by any means, without permission in writing from the publisher.

17–71. Wheels A and B have weights of 150 lb and 100 lb, respectively. Initially, wheel A rotates clockwise with a constant angular velocity of $\omega = 100$ rad/s and wheel B is at rest. If A is brought into contact with B, determine the time required for both wheels to attain the same angular velocity. The coefficient of kinetic friction between the two wheels is $\mu_k = 0.3$ and the radii of gyration of A and B about their respective centers of mass are $k_A = 1$ ft and $k_B = 0.75$ ft. Neglect the weight of link AC.

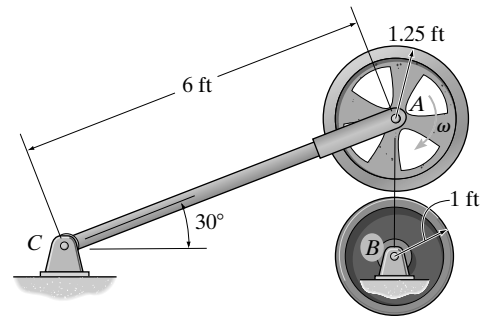

Equations of Motion: Wheel A will slip on wheel B until both wheels attain the same angular velocity. The frictional force developed at the contact point is $F = \mu_k N = 0.3N$. The mass moment of inertia of wheel A about its mass center is $I_A = m_A k_A{}^2 = \frac{150}{32.2}\left(1^2\right)$ slug · ft^2. Referring to the free-body diagram of wheel A shown in Fig. a.

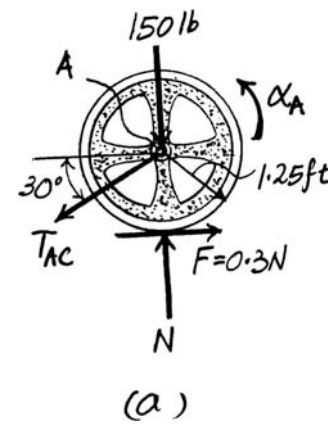

$$\overset{+}{\rightarrow} \Sigma F_x = m(a_G)_x\,; \qquad 0.3N - T_{AC}\cos 30° = 0$$

$$+\uparrow \Sigma F_y = m(a_G)_y\,; \quad N - T_{AC}\sin 30° - 150 = 0$$

$$\circlearrowleft + \Sigma M_A = I_A\,\alpha_A\,; \qquad 0.3N(1.25) = \left[\frac{150}{32.2}\left(1^2\right)\right]\alpha_A$$

Solving,

$$N = 181.42 \text{ lb} \qquad T_{AC} = 62.85 \text{ lb} \qquad \alpha_A = 14.60 \text{ rad/s}$$

The mass moment of inertia of wheel B about its mass center is

$$I_B = m_B k_B{}^2 = \frac{100}{32.2}\left(0.75^2\right) \text{ slug} \cdot \text{ft}^2$$

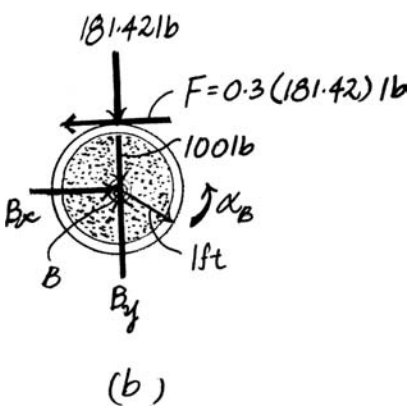

Writing the moment equation of motion about point B using the free-body diagram of wheel B shown in Fig. b,

$$+\Sigma M_B = I_B\,\alpha_B\,; \qquad 0.3(181.42)(1) = \frac{100}{32.2}\left(0.75^2\right)\alpha_B$$

$$\alpha_B = 31.16 \text{ rad/s}^2$$

Kinematics: Since the angular acceleration of both wheels is constant,

$$\circlearrowleft + \qquad \omega_A = (\omega_A)_0 + \alpha_A\, t$$

$$\omega_A = 100 + (-14.60)t$$

and

$$\circlearrowleft + \qquad \omega_B = (\omega_B)_0 + \alpha_B\, t$$

$$\omega_B = 0 + 31.16t$$

Since ω_A is required to be equal to ω_B, we obtain

$$100 + (-14.60)t = 31.16t$$

$$t = 2.185 \text{ s} = 2.19 \text{ s} \qquad \textbf{Ans.}$$

© 2010 Pearson Education, Inc., Upper Saddle River, NJ. All rights reserved. This material is protected under all copyright laws as they currently exist. No portion of this material may be reproduced, in any form or by any means, without permission in writing from the publisher.

***17–72.** Initially, wheel A rotates clockwise with a constant angular velocity of $\omega = 100$ rad/s. If A is brought into contact with B, which is held fixed, determine the number of revolutions before wheel A is brought to a stop. The coefficient of kinetic friction between the two wheels is $\mu_k = 0.3$, and the radius of gyration of A about its mass center is $k_A = 1$ ft. Neglect the weight of link AC.

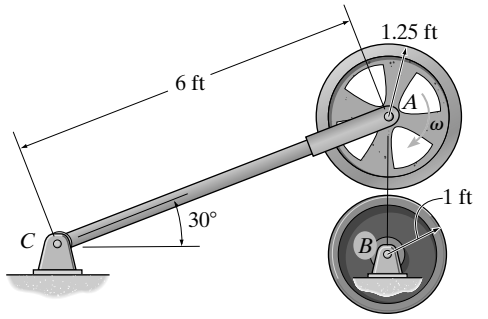

Equations of Motion: Since wheel B is fixed, wheel A will slip on wheel B. The frictional force developed at the contact point is $F = \mu_k N = 0.3N$. The mass moment of inertia of wheel A about its mass center is $I_A = m_A k_A{}^2 = \frac{150}{32.2}\left(1^2\right)$ slug · ft^2. Referring to the free-body diagram of wheel A shown in Fig. a,

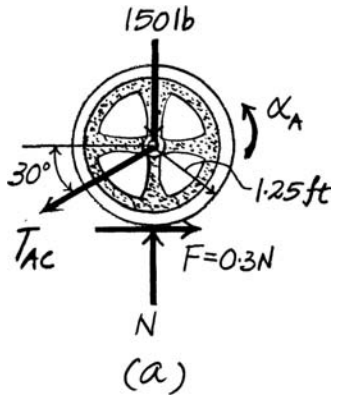

$\overset{+}{\rightarrow} \Sigma F_x = m(a_G)_x;\qquad 0.3N - T_{AC}\cos 30° = 0$

$+\uparrow \Sigma F_y = m(a_G)_y;\quad N - T_{AC}\sin 30° - 150 = 0$

$\circlearrowleft + \Sigma M_A = I_A\,\alpha_A;\qquad 0.3N(1.25) = \left[\frac{150}{32.2}\left(1^2\right)\right]\alpha_A$

Solving,

$N = 181.42$ lb $\qquad T_{AC} = 62.85$ lb $\qquad \alpha_A = 14.60$ rad/s

Kinematics: Since the angular acceleration is constant,

$\circlearrowleft +\qquad \omega_A{}^2 = (\omega_A)^2{}_0 + 2\alpha_A(\theta - \theta_0)$

$0^2 = 100^2 + 2(-14.60)(\theta - 0)$

$\theta = 342.36\text{ rad}\left(\frac{1\text{ rad}}{2\pi\text{ rad}}\right) = 54.49\text{ rev} = 54.5\text{ rev}$ **Ans.**

•17–73. The bar has a mass m and length l. If it is released from rest from the position $\theta = 30°$, determine its angular acceleration and the horizontal and vertical components of reaction at the pin O.

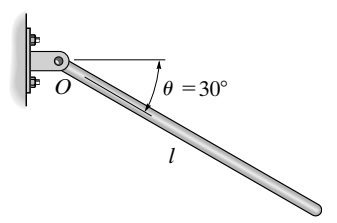

$\circlearrowright + \Sigma M_O = I_O\,\alpha;\qquad (mg)\left(\frac{l}{2}\right)\cos 30° = \frac{1}{3}ml^2\,\alpha$

$\alpha = \frac{1.299g}{l} = \frac{1.30g}{l}$ **Ans.**

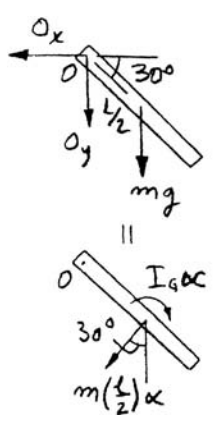

$\overset{+}{\leftarrow} \Sigma F_x = m(a_G)_x;\qquad O_x = m\left(\frac{l}{2}\right)\left(\frac{1.299g}{l}\right)\sin 30°$

$O_x = 0.325mg$ **Ans.**

$+\uparrow \Sigma F_y = m(a_G)_y;\qquad O_y - mg = -m\left(\frac{l}{2}\right)\left(\frac{1.299g}{l}\right)\cos 30°$

$O_y = 0.438mg$ **Ans.**

© 2010 Pearson Education, Inc., Upper Saddle River, NJ. All rights reserved. This material is protected under all copyright laws as they currently exist. No portion of this material may be reproduced, in any form or by any means, without permission in writing from the publisher.

17–74. The uniform slender rod has a mass of 9 kg. If the spring is unstretched when $\theta = 0°$, determine the magnitude of the reactive force exerted on the rod by pin A when $\theta = 45°$, if at this instant $\omega = 6$ rad/s. The spring has a stiffness of $k = 150$ N/m and always remains in the horizontal position.

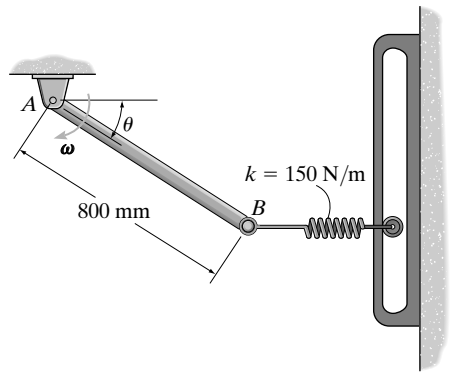

Equations of Motion: The stretch of the spring when $\theta = 45°$ is $s = 0.8 - 0.8\cos 45° = 0.2343$ m. Thus, $F_{sp} = ks = 150(0.2343) = 35.15$ N. Since the rod rotates about a fixed axis passing through point A, $(a_G)_t = \alpha r_G = \alpha(0.4)$ and $(a_G)_n = \omega^2 r_G = 6^2(0.4) = 14.4$ m/s^2. The mass moment of inertia of the rod about its mass center is $I_G = \frac{1}{12}ml^2 = \frac{1}{12}(9)\left(0.8^2\right) = 0.48$ kg·m^2. Writing the moment equation of motion about point A, Fig. a,

$$\circlearrowleft + \Sigma M_A = \Sigma(M_k)_A; \qquad 35.15\cos 45°(0.8) - 9(9.81)\cos 45°(0.4)$$

$$= -9[\alpha(0.4)](0.4) - 0.48\alpha$$

$$\alpha = 2.651 \text{ rad/s}^2$$

The above result can also be obtained by applying $\Sigma M_A = I_A\,\alpha$, where

$$I_A = I_G + md^2 = \frac{1}{12}(9)\left(0.8^2\right) + 9\left(0.4^2\right) = 1.92 \text{ kg}\cdot\text{m}^2$$

Thus,

$$\circlearrowleft + \Sigma M_A = I_A\,\alpha; \qquad 35.15\cos 45°(0.8) - 9(9.81)\cos 45°(0.4) = -1.92\alpha$$

$$\alpha = 2.651 \text{ rad/s}^2$$

Using this result and writing the force equation of motion along the n and t axes,

$$+\swarrow \Sigma F_t = m(a_G)_t; \qquad 9(9.81)\cos 45° - 35.15\cos 45° - A_t = 9[2.651(0.4)]$$

$$A_t = 28.03 \text{ N}$$

$$+\nwarrow \Sigma F_n = m(a_G)_n; \qquad A_n - 9(9.81)\sin 45° - 35.15\sin 45° = 9(14.4)$$

$$A_n = 216.88 \text{ N}$$

Thus,

$$F_A = \sqrt{A_t^2 + A_n^2} = \sqrt{28.03^2 + 216.88^2}$$

$$= 218.69 \text{ N} = 219 \text{ N} \qquad \textbf{Ans.}$$

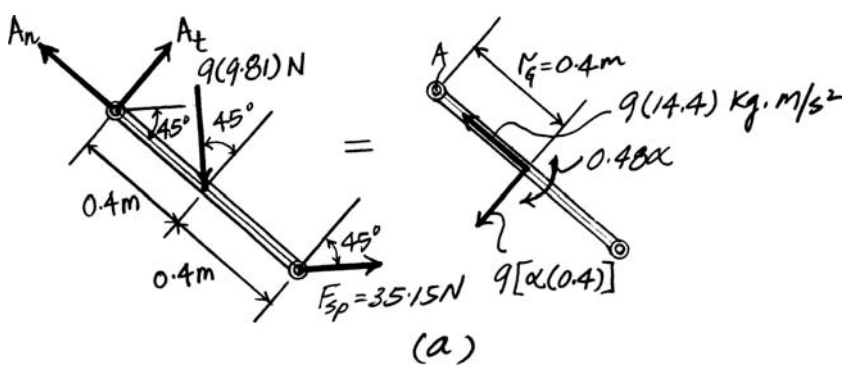

© 2010 Pearson Education, Inc., Upper Saddle River, NJ. All rights reserved. This material is protected under all copyright laws as they currently exist. No portion of this material may be reproduced, in any form or by any means, without permission in writing from the publisher.

17–75. Determine the angular acceleration of the 25-kg diving board and the horizontal and vertical components of reaction at the pin A the instant the man jumps off. Assume that the board is uniform and rigid, and that at the instant he jumps off the spring is compressed a maximum amount of 200 mm, $\omega = 0$, and the board is horizontal. Take $k = 7$ kN/m.

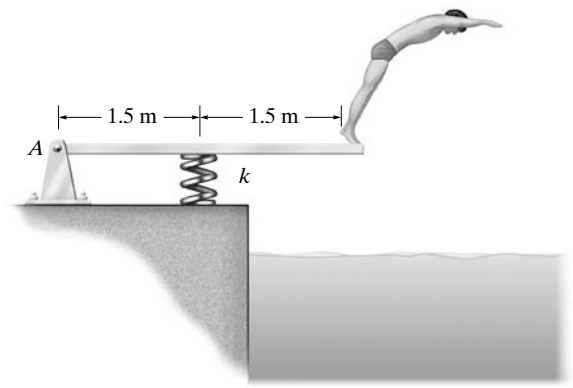

$$\circlearrowleft + \sum M_A = I_A\alpha; \qquad 1.5(1400 - 245.25) = \left[\frac{1}{3}(25)(3)^2\right]\alpha$$

$$+\uparrow \sum F_t = m(a_G)_t; \qquad 1400 - 245.25 - A_y = 25(1.5\alpha)$$

$$\overset{+}{\leftarrow} \sum F_n = m(a_G)_n; \qquad A_x = 0$$

Solving,

$A_x = 0$ **Ans.**

$A_y = 289$ N **Ans.**

$\alpha = 23.1$ rad/s^2 **Ans.**

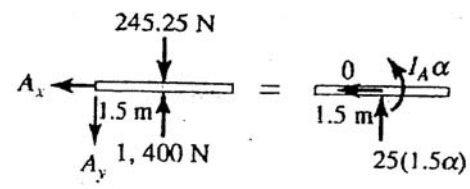

© 2010 Pearson Education, Inc., Upper Saddle River, NJ. All rights reserved. This material is protected under all copyright laws as they currently exist. No portion of this material may be reproduced, in any form or by any means, without permission in writing from the publisher.

***17–76.** The slender rod of length L and mass m is released from rest when $\theta = 0°$. Determine as a function of θ the normal and the frictional forces which are exerted by the ledge on the rod at A as it falls downward. At what angle θ does the rod begin to slip if the coefficient of static friction at A is μ?

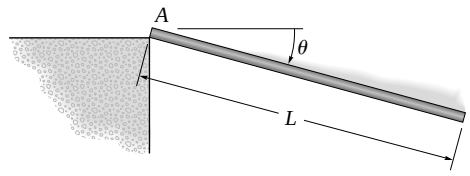

Equations of Motion: The mass moment inertia of the rod about its mass center is given by $I_G = \frac{1}{12}mL^2$. At the instant shown, the normal component of acceleration of the mass center for the rod is $(a_G)_n = \omega^2 r_G = \omega^2\left(\frac{L}{2}\right)$. The tangential component of acceleration of the mass center for the rod is $(a_G)_t = \alpha r_s = \alpha\left(\frac{L}{2}\right)$.

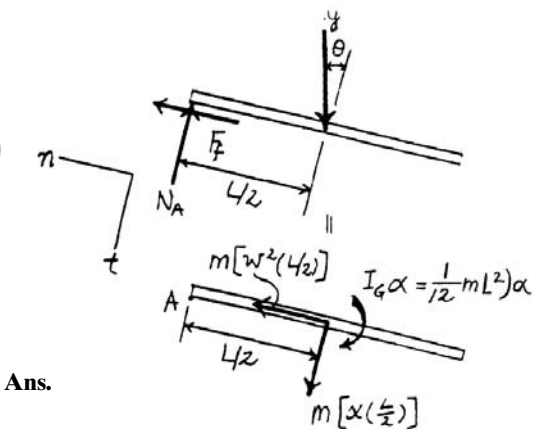

$$\circlearrowleft + \Sigma M_A = \Sigma(M_k)_O; \qquad -mg\cos\theta\left(\frac{L}{2}\right) = -\left(\frac{1}{12}mL^2\right)\alpha - m\left[\alpha\left(\frac{L}{2}\right)\right]\left(\frac{L}{2}\right)$$

$$\alpha = \frac{3g}{2L}\cos\theta$$

$$+\swarrow \Sigma F_t = m(a_G)_t; \qquad mg\cos\theta - N_A = m\left[\frac{3g}{2L}\cos\theta\left(\frac{L}{2}\right)\right]$$

$$N_A = \frac{mg}{4}\cos\theta \qquad \textbf{Ans.}$$

$$\nwarrow + \Sigma F_n = m(a_G)_n; \qquad F_f - mg\sin\theta = m\left[\omega^2\left(\frac{L}{2}\right)\right] \qquad \textbf{(1)}$$

Kinematics: Applying equation $\omega\, d\omega = a\, d\theta$, we have

$$\int_0^{\omega} \omega\, d\omega = \int_{0°}^{\theta} \frac{3g}{2L}\cos\theta\, d\theta$$

$$\omega^2 = \frac{3g}{L}\sin\theta$$

Substitute $\omega^2 = \frac{3g}{L}\sin\theta$ into Eq. (1) gives

$$F_f = \frac{5mg}{2}\sin\theta \qquad \textbf{Ans.}$$

If the rod is on the verge of slipping at A, $F_f = \mu N_A$. Substitute the data obtained above, we have

$$\frac{5mg}{2}\sin\theta = \mu\left(\frac{mg}{4}\cos\theta\right)$$

$$\theta = \tan^{-1}\left(\frac{\mu}{10}\right) \qquad \textbf{Ans.}$$

© 2010 Pearson Education, Inc., Upper Saddle River, NJ. All rights reserved. This material is protected under all copyright laws as they currently exist. No portion of this material may be reproduced, in any form or by any means, without permission in writing from the publisher.

•17–77. The 100-kg pendulum has a center of mass at G and a radius of gyration about G of $k_G = 250$ mm. Determine the horizontal and vertical components of reaction on the beam by the pin A and the normal reaction of the roller B at the instant $\theta = 90°$ when the pendulum is rotating at $\omega = 8$ rad/s. Neglect the weight of the beam and the support.

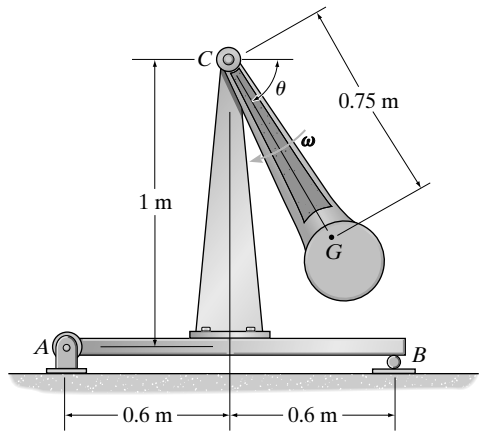

Equations of Motion: Since the pendulum rotates about the fixed axis passing through point C, $(a_G)_t = \alpha r_G = \alpha(0.75)$ and $(a_G)_n = \omega^2 r_G = 8^2(0.75) = 48$ m/s^2. Here, the mass moment of inertia of the pendulum about this axis is $I_C = 100(0.25)^2 + 100(0.75^2) = 62.5$ kg·m^2. Writing the moment equation of motion about point C and referring to the free-body diagram of the pendulum, Fig. a, we have

$$\circlearrowleft + \Sigma M_C = I_C\alpha; \qquad 0 = 62.5\alpha \qquad \alpha = 0$$

Using this result to write the force equations of motion along the n and t axes,

$$\overset{+}{\leftarrow} \Sigma F_t = m(a_G)_t; \qquad -C_t = 100[0(0.75)] \qquad C_t = 0$$

$$+\uparrow \Sigma F_n = m(a_G)_n; \qquad C_n - 100(9.81) = 100(48) \qquad C_n = 5781 \text{ N}$$

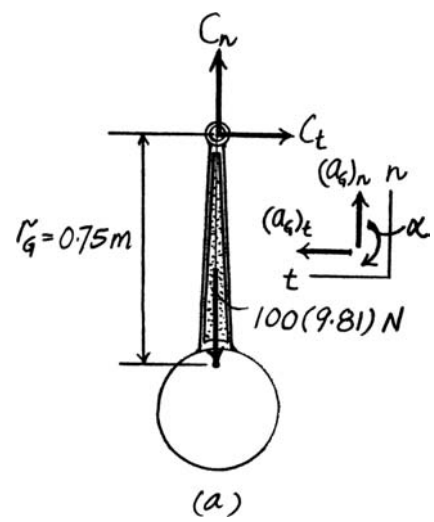

Equilibrium: Writing the moment equation of equilibrium about point A and using the free-body diagram of the beam in Fig. b, we have

$$+\Sigma M_A = 0; \qquad N_B(1.2) - 5781(0.6) = 0 \qquad N_B = 2890.5 \text{ N} = 2.89 \text{ kN} \qquad \textbf{Ans.}$$

Using this result to write the force equations of equilibrium along the x and y axes, we have

$$\overset{+}{\rightarrow} \Sigma F_x = 0; \qquad A_x = 0 \qquad \textbf{Ans.}$$

$$+\uparrow \Sigma F_y = 0; \qquad A_y + 2890.5 - 5781 = 0 \qquad A_y = 2890.5 \text{ N} = 2.89 \text{ kN} \qquad \textbf{Ans.}$$

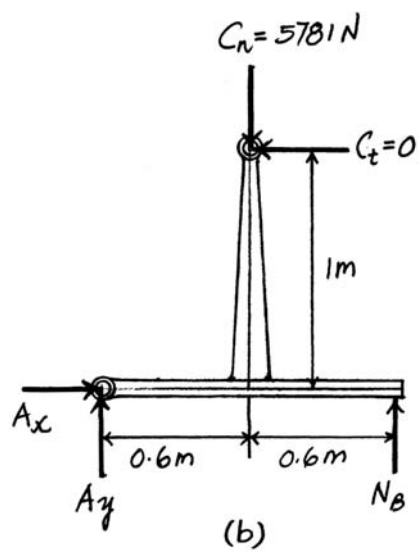

© 2010 Pearson Education, Inc., Upper Saddle River, NJ. All rights reserved. This material is protected under all copyright laws as they currently exist. No portion of this material may be reproduced, in any form or by any means, without permission in writing from the publisher.

17–78. The 100-kg pendulum has a center of mass at G and a radius of gyration about G of $k_G = 250$ mm. Determine the horizontal and vertical components of reaction on the beam by the pin A and the normal reaction of the roller B at the instant $\theta = 0°$ when the pendulum is rotating at $\omega = 4$ rad/s. Neglect the weight of the beam and the support.

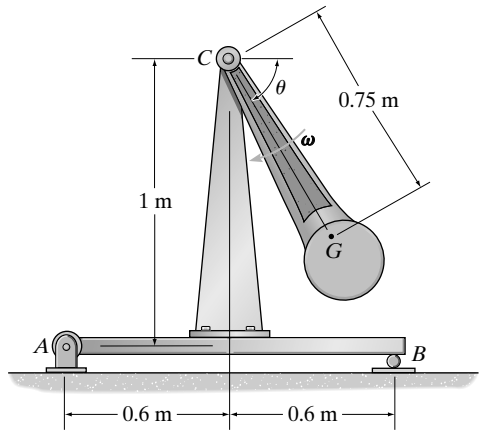

Equations of Motion: Since the pendulum rotates about the fixed axis passing through point C, $(a_G)_t = \alpha r_G = \alpha(0.75)$ and $(a_G)_n = \omega^2 r_G = 4^2(0.75) = 12\ \text{m/s}^2$. Here, the mass moment of inertia of the pendulum about this axis is $I_C = 100(0.25^2) + 100(0.75)^2 = 62.5\ \text{kg}\cdot\text{m}^2$. Writing the moment equation of motion about point C and referring to the free-body diagram shown in Fig. a,

$$\circlearrowleft + \Sigma M_C = I_C\alpha; \qquad -100(9.81)(0.75) = -62.5\alpha \qquad \alpha = 11.772\ \text{rad/s}^2$$

Using this result to write the force equations of motion along the n and t axes, we have

$$+\uparrow \Sigma F_t = m(a_G)_t; \qquad C_t - 100(9.81) = -100[11.772(0.75)] \qquad C_t = 98.1\ \text{N}$$

$$\overset{+}{\leftarrow} \Sigma F_n = m(a_G)_n; \qquad C_n = 100(12) \qquad C_n = 1200\ \text{N}$$

Equilibrium: Writing the moment equation of equilibrium about point A and using the free-body diagram of the beam in Fig. b,

$$+\Sigma M_A = 0; \qquad N_B(1.2) - 98.1(0.6) - 1200(1) = 0 \qquad N_B = 1049.05\ \text{N} = 1.05\ \text{kN} \quad \textbf{Ans.}$$

Using this result to write the force equations of equilibrium along the x and y axes, we have

$$\overset{+}{\rightarrow} \Sigma F_x = 0; \qquad 1200 - A_x = 0 \qquad A_x = 1200\ \text{N} = 1.20\ \text{kN} \qquad \textbf{Ans.}$$

$$+\uparrow \Sigma F_y = 0; \qquad 1049.05 - 98.1 - A_y = 0 \qquad A_y = 950.95\ \text{N} = 951\ \text{N} \qquad \textbf{Ans.}$$

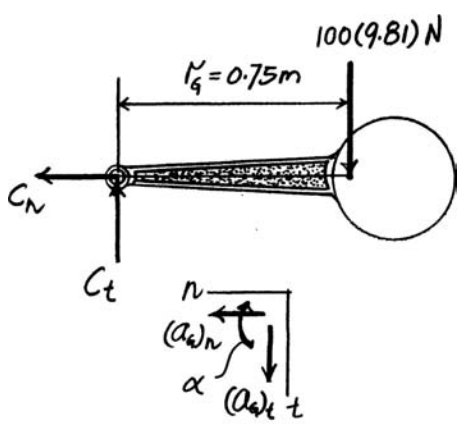

(a)

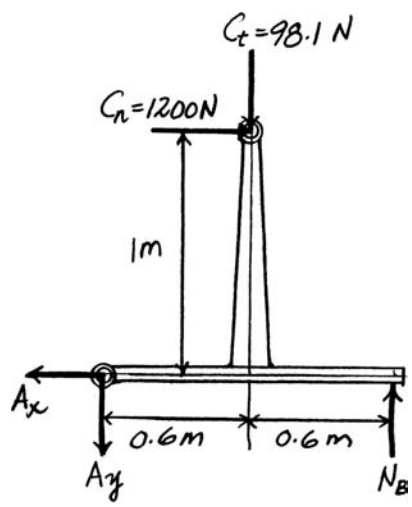

(b)

© 2010 Pearson Education, Inc., Upper Saddle River, NJ. All rights reserved. This material is protected under all copyright laws as they currently exist. No portion of this material may be reproduced, in any form or by any means, without permission in writing from the publisher.

17–79. If the support at B is suddenly removed, determine the initial horizontal and vertical components of reaction that the pin A exerts on the rod ACB. Segments AC and CB each have a weight of 10 lb.

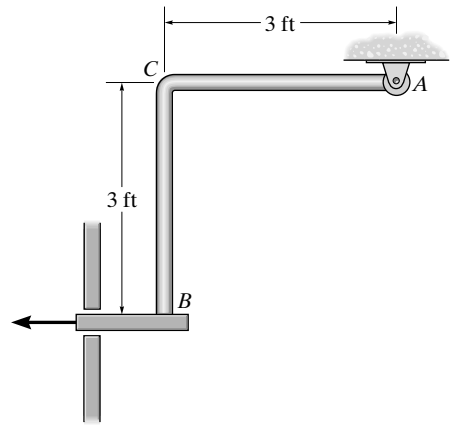

Equations of Motion: The mass moment inertia of the rod segment AC and BC about their respective mass center is $I_G = \frac{1}{12}ml^2 = \frac{1}{12}\left(\frac{10}{32.2}\right)(3^2)$ $= 0.2329\ \text{slug}\cdot\text{ft}^2$. At the instant shown, the normal component of acceleration of the mass center for rod segment AB and BC are $[(a_G)_n]_{AB} = [(a_G)_n]_{BC} = 0$ since the angular velocity of the assembly $\omega = 0$ at that instant. The tangential component of acceleration of the mass center for rod segment AC and BC are $[(a_G)_t]_{AB} = 1.5\,\alpha$ and $[\,(a_G)_t\,]_{BC} = \sqrt{11.25}\alpha$.

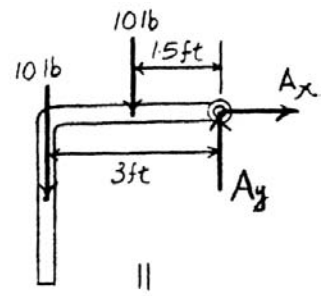

$$\circlearrowleft + \Sigma M_A = \Sigma(M_k)_A; \qquad 10(1.5) + 10(3) = 0.2329\alpha + \left(\frac{10}{32.2}\right)(1.5\alpha)(1.5)$$

$$+ 0.2329\,\alpha + \left(\frac{10}{32.2}\right)(\sqrt{11.25}\alpha)\,(\sqrt{11.25})$$

$$\alpha = 9.660\ \text{rad/s}^2$$

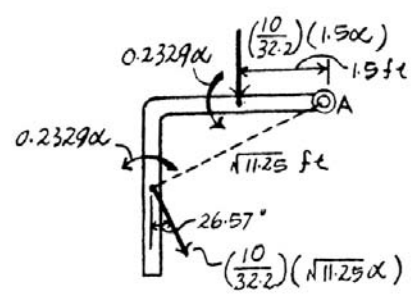

$$\overset{+}{\rightarrow} \Sigma F_x = m(a_G)_x; \qquad A_x = \left(\frac{10}{32.2}\right)[\,\sqrt{11.25}\,(9.660)\,]\sin 26.57^\circ$$

$$A_x = 4.50\ \text{lb} \qquad \textbf{Ans.}$$

$$+\uparrow \Sigma F_y = m(a_G)_y; \qquad A_y - 20 = -\left(\frac{10}{32.2}\right)[\,1.5(9.660)]$$

$$-\left(\frac{10}{32.2}\right)[\,\sqrt{11.25}\,(9.660)\,]\cos 26.57^\circ$$

$$A_y = 6.50\ \text{lb} \qquad \textbf{Ans.}$$

© 2010 Pearson Education, Inc., Upper Saddle River, NJ. All rights reserved. This material is protected under all copyright laws as they currently exist. No portion of this material may be reproduced, in any form or by any means, without permission in writing from the publisher.

***17–80.** The hose is wrapped in a spiral on the reel and is pulled off the reel by a horizontal force of $P = 200$ N. Determine the angular acceleration of the reel after it has turned 2 revolutions. Initially, the radius is $r = 500$ mm. The hose is 15 m long and has a mass per unit length of 10 kg/m. Treat the wound-up hose as a disk.

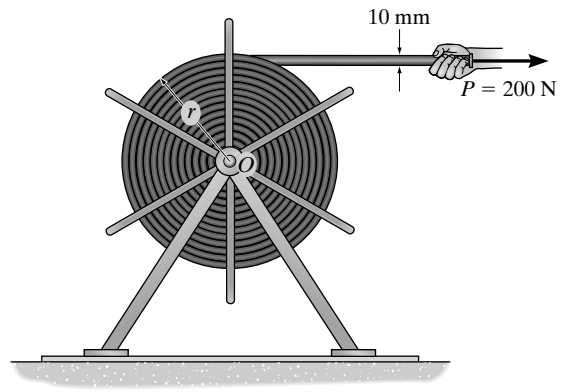

Equations of Motion: The mass of the hose on the reel when it rotates through an angle θ is $m = 15(10) - r\theta(10) = (150 - 10r\theta)$ kg. Then, the mass moment of inertia of the reel about point O at any instant is $I_O = \frac{1}{2}mr^2 = \frac{1}{2}(150 - 10r\theta)r^2$. Also, the acceleration of the unwound hose is $a = \alpha r$. Writing the moment equation of motion about point O,

$$\circlearrowleft + \Sigma M_O = \Sigma(M_k)_O; \qquad -200(r) = -\left[\frac{1}{2}(150 - 10r\theta)r^2\right]\alpha - 10r\theta(\alpha r)r$$

$$\alpha = \frac{200}{75r + 5r^2\theta}$$

However, $r = 0.5 - \frac{\theta}{2\pi}(0.01) = 0.5 - \frac{0.005}{\pi}\theta$. Thus, when $\theta = 2\text{ rev}\left(\frac{2\pi\text{ rad}}{1\text{ rev}}\right) = 4\pi$ rad, $r = 0.48$ m. Then

$$\alpha = \frac{200}{75(0.48) + 5(0.48^2)(4\pi)}$$

$$= 3.96\text{ rad/s}^2 \qquad \textbf{Ans.}$$

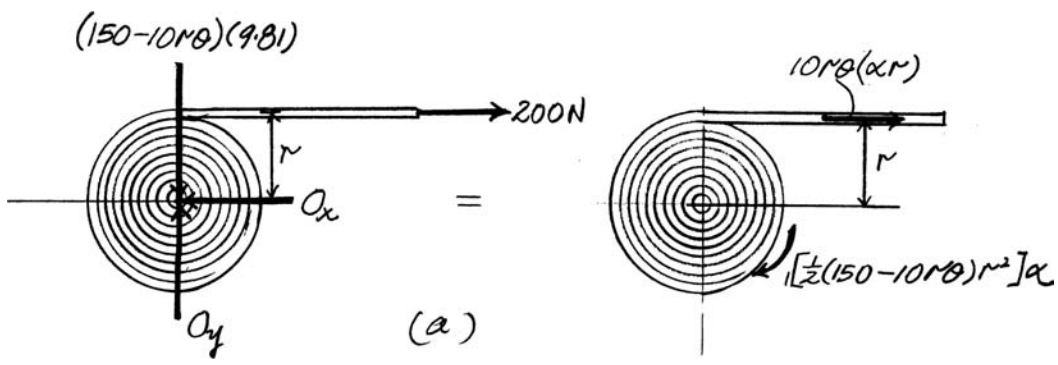

© 2010 Pearson Education, Inc., Upper Saddle River, NJ. All rights reserved. This material is protected under all copyright laws as they currently exist. No portion of this material may be reproduced, in any form or by any means, without permission in writing from the publisher.

•17–81. The disk has a mass of 20 kg and is originally spinning at the end of the strut with an angular velocity of $\omega = 60$ rad/s. If it is then placed against the wall, where the coefficient of kinetic friction is $\mu_k = 0.3$, determine the time required for the motion to stop. What is the force in strut BC during this time?

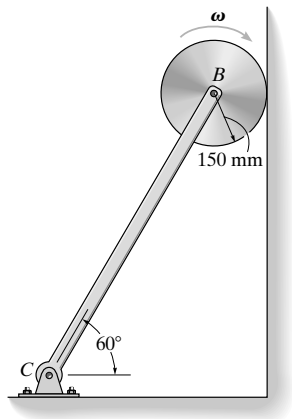

$\xrightarrow{+} \Sigma F_x = m(a_G)_x; \qquad F_{CB}\sin 30° - N_A = 0$

$+\uparrow \Sigma F_y = m(a_G)_y; \qquad F_{CB}\cos 30° - 20(9.81) + 0.3N_A = 0$

$\circlearrowleft + \Sigma M_B = I_B\,\alpha; \qquad 0.3N_A(0.15) = \left[\frac{1}{2}(20)(0.15)^2\right]\alpha$

$N_A = 96.6$ N

$F_{CB} = 193$ N **Ans.**

$\alpha = 19.3$ rad/s^2

$\circlearrowright + \qquad \omega = \omega_0 + \alpha_c t$

$0 = 60 + (-19.3)\,t$

$t = 3.11$ s **Ans.**

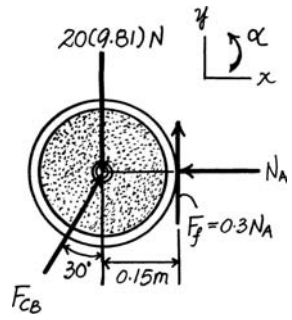

17–82. The 50-kg uniform beam (slender rod) is lying on the floor when the man exerts a force of $F = 300$ N on the rope, which passes over a small smooth peg at C. Determine the initial angular acceleration of the beam. Also find the horizontal and vertical reactions on the beam at A (considered to be a pin) at this instant.

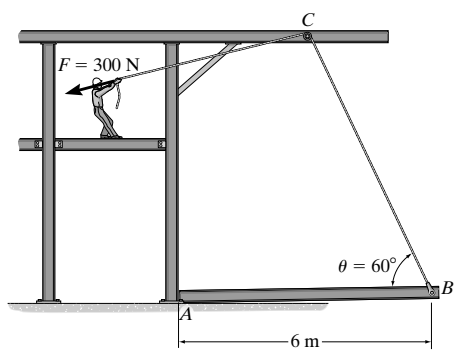

Equations of Motion: Since the beam rotates about a fixed axis passing through point A, $(a_G)_t = \alpha r_G = \alpha(3)$ and $(a_G)_n = \omega^2 r_G = \omega^2(3)$. However, the beam is initially at rest, so $\omega = 0$. Thus, $(a_G)_n = 0$. Here, the mass moment of inertia of the beam about its mass center is $I_G = \frac{1}{12}ml^2 = \frac{1}{12}(50)(6^2) = 150$ kg·m^2. Writing the moment equation of motion about point A, Fig. a,

$\circlearrowleft + \Sigma M_A = \Sigma(M_k)_A; \qquad 300\sin 60°(6) - 50(9.81)(3) = 50[\alpha(3)](3) + 150\alpha$

$\alpha = 0.1456$ rad/s^2 $= 0.146$ rad/s^2 **Ans.**

This result can also be obtained by applying $\Sigma M_A = I_A\,\alpha$, where

$$I_A = \frac{1}{12}(50)(6^2) + 50(3^2) = 600 \text{ kg}\cdot\text{m}^2$$

Thus,

$\circlearrowleft + \Sigma M_A = \Sigma(\mu_k)_A; \qquad 300\sin 60°(6) - 50(9.81)(3) = 600\alpha$

$\alpha = 0.1456$ rad/s^2 $= 0.146$ rad/s^2 **Ans.**

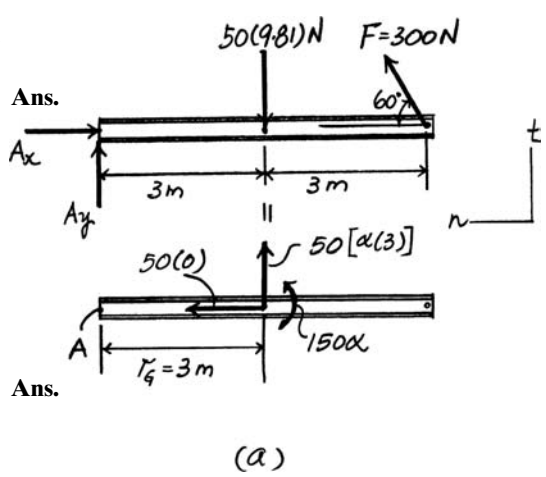

Using this result to write the force equations of motion along the n and t axes,

$\xleftarrow{+} \Sigma F_t = m(a_G)_t; \qquad 300\cos 60° - A_x = 50(0) \qquad A_x = 150$ N **Ans.**

$+\uparrow \Sigma F_n = m(a_G)_n; \quad A_y + 300\sin 60° - 50(9.81) = 50[0.1456(3)]$

$A_y = 252.53$ N $= 253$ N **Ans.**

© 2010 Pearson Education, Inc., Upper Saddle River, NJ. All rights reserved. This material is protected under all copyright laws as they currently exist. No portion of this material may be reproduced, in any form or by any means, without permission in writing from the publisher.

17–83. At the instant shown, two forces act on the 30-lb slender rod which is pinned at O. Determine the magnitude of force **F** and the initial angular acceleration of the rod so that the horizontal reaction which the *pin exerts on the rod* is 5 lb directed to the right.

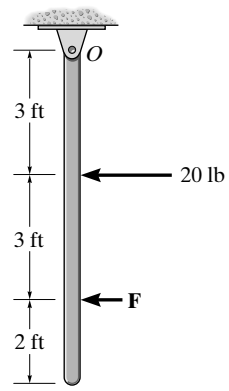

Equations of Motion: The mass moment of inertia of the rod about point O is given by $I_O = I_G = mr_G^2 = \frac{1}{12}\left(\frac{30}{32.2}\right)(8^2) + \left(\frac{30}{32.2}\right)(4^2) = 19.88\ \text{slug}\cdot\text{ft}^2$. At the instant shown, the tangential component of acceleration of the mass center for the rod is $(a_G)_t = \alpha r_g = 4\alpha$. Applying Eq. 17–16, we have

$\circlearrowleft + \Sigma M_O = I_O\,\alpha;$ $\qquad -20(3) - F(6) = -19.88\alpha$ **(1)**

$\Sigma F_t = m(a_G)_t;$ $\qquad 20 + F - 5 = \left(\frac{30}{32.2}\right)(4\alpha)$ **(2)**

Solving Eqs. (1) and (2) yields:

$\alpha = 12.1\ \text{rad/s}^2 \qquad F = 30.0\ \text{lb}$ **Ans.**

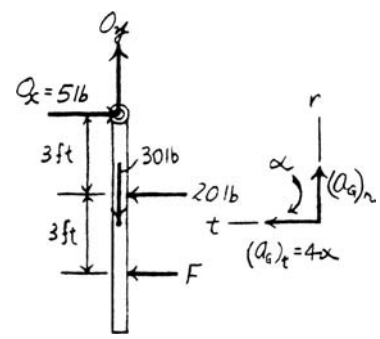

***17–84.** The 50-kg flywheel has a radius of gyration about its center of mass of $k_O = 250$ mm. It rotates with a constant angular velocity of 1200 rev/min before the brake is applied. If the coefficient of kinetic friction between the brake pad B and the wheel's rim is $\mu_k = 0.5$, and a force of $P = 300$ N is applied to the braking mechanism's handle, determine the time required to stop the wheel.

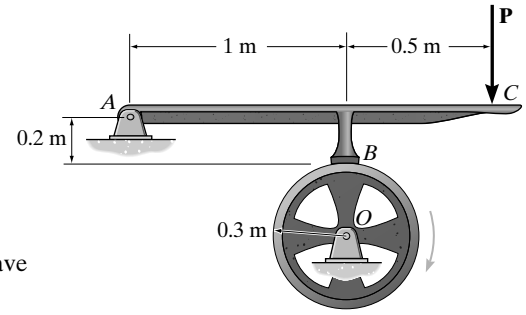

Equilibrium: Writing the moment equation of equilibrium about point A, we have

$\circlearrowleft + \Sigma M_A = 0;$ $\qquad N_B(1) + 0.5N_B(0.2) - 300(1.5) = 0$

$N_B = 409.09\ \text{N}$

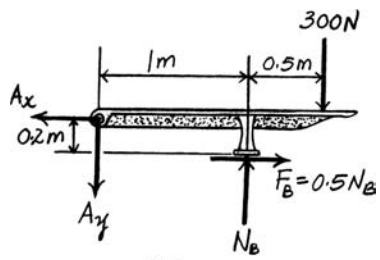

(a)

Equations of Motion: The mass moment of inertia of the flywheel about its center is $I_O = 50(0.25^2) = 3.125\ \text{kg}\cdot\text{m}^2$. Referring to the free-body diagram of the flywheel shown in Fig. b, we have

$+\Sigma M_O = I_O\,\alpha;$ $\qquad 0.5(409.09)(0.3) = 3.125\alpha$

$\alpha = 19.64\ \text{rad/s}^2$

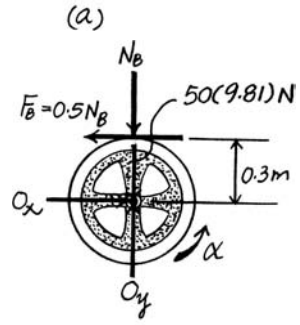

(b)

Kinematics: Here, $\omega_0 = \left(1200\,\frac{\text{rev}}{\text{min}}\right)\left(\frac{2\pi\ \text{rad}}{1\ \text{rev}}\right)\left(\frac{1\ \text{min}}{60\ \text{s}}\right) = 40\pi\ \text{rad/s}$. Since the angular acceleration is constant,

$\circlearrowleft +$ $\qquad \omega = \omega_0 + \alpha t$

$0 = 40\pi + (-19.64)t$

$t = 6.40\ \text{s}$ **Ans.**

© 2010 Pearson Education, Inc., Upper Saddle River, NJ. All rights reserved. This material is protected under all copyright laws as they currently exist. No portion of this material may be reproduced, in any form or by any means, without permission in writing from the publisher.

•17–85. The 50-kg flywheel has a radius of gyration about its center of mass of $k_O = 250$ mm. It rotates with a constant angular velocity of 1200 rev/min before the brake is applied. If the coefficient of kinetic friction between the brake pad B and the wheel's rim is $\mu_k = 0.5$, determine the constant force **P** that must be applied to the braking mechanism's handle in order to stop the wheel in 100 revolutions.

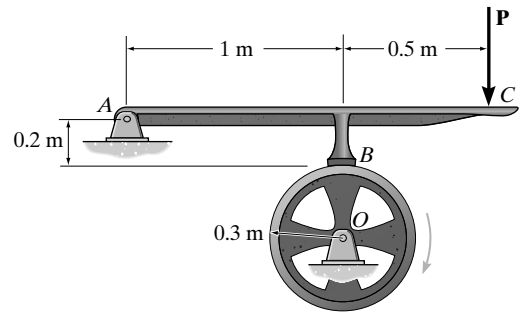

Kinematics: Here,

$$\omega_0 = \left(1200\,\frac{\text{rev}}{\text{min}}\right)\left(\frac{2\pi\text{ rad}}{1\text{ rev}}\right)\left(\frac{1\text{ min}}{60\text{ s}}\right) = 40\pi\text{ rad/s}$$

and

$$\theta = (100\text{ rev})\left(\frac{2\pi\text{ rad}}{1\text{ rev}}\right) = 200\pi\text{ rad}$$

Since the angular acceleration is constant,

$$\circlearrowleft + \quad \omega^2 = \omega_0{}^2 + \alpha(\theta - \theta_0)$$

$$0^2 = (40\pi)^2 + 2\alpha(200\pi - 0)$$

$$\alpha = -12.57\text{ rad/s}^2 = 12.57\text{ rad/s}^2$$

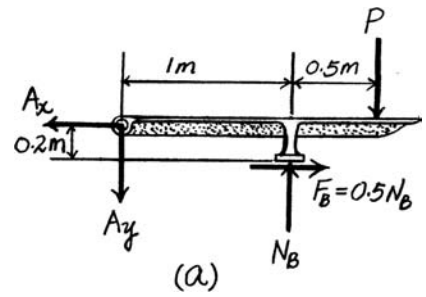

(a)

Equilibrium: Writing the moment equation of equilibrium about point A using the free-body diagram of the brake shown in Fig. a,

$$\circlearrowleft + \Sigma M_A = 0; \qquad N_B(1) + 0.5N_B(0.2) - P(1.5) = 0$$

$$N_B = 1.3636P$$

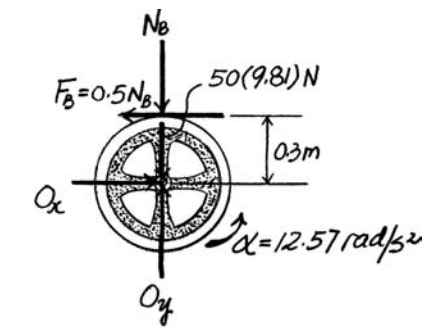

(b)

Equations of Motion: The mass moment of inertia of the flywheel about its center is $I_O = mk_O{}^2 = 50(0.25^2) = 3.125\text{ kg}\cdot\text{m}^2$. Referring to the free-body diagram of the flywheel shown in Fig. b,

$$+\Sigma M_O = I_O\alpha; \qquad 0.5(1.3636\,P)(0.3) = 3.125(12.57)$$

$$P = 191.98\text{ N} = 192\text{ N} \qquad \textbf{Ans.}$$

17–86. The 5-kg cylinder is initially at rest when it is placed in contact with the wall B and the rotor at A. If the rotor always maintains a constant clockwise angular velocity $\omega = 6$ rad/s, determine the initial angular acceleration of the cylinder. The coefficient of kinetic friction at the contacting surfaces B and C is $\mu_k = 0.2$.

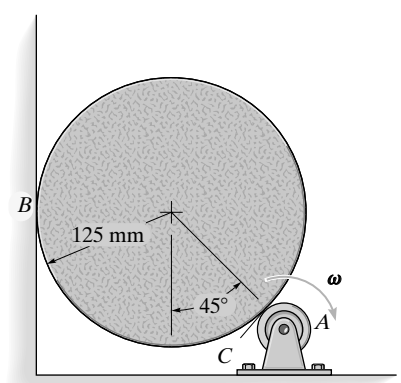

Equations of Motion: The mass moment of inertia of the cylinder about point O is given by $I_O = \frac{1}{2}mr^2 = \frac{1}{2}(5)(0.125^2) = 0.0390625\text{ kg}\cdot\text{m}^2$. Applying Eq. 17–16, we have

$$\overset{+}{\rightarrow}\Sigma F_x = m(a_G)_x; \qquad N_B + 0.2N_A\cos 45° - N_A\sin 45° = 0 \qquad \textbf{(1)}$$

$$+\uparrow\Sigma F_y = m(a_G)_y; \qquad 0.2N_B + 0.2N_A\sin 45° + N_A\cos 45° - 5(9.81) = 0 \qquad \textbf{(2)}$$

$$\circlearrowleft + \Sigma M_O = I_O\,\alpha; \qquad 0.2N_A(0.125) - 0.2N_B(0.125) = 0.0390625\alpha \qquad \textbf{(3)}$$

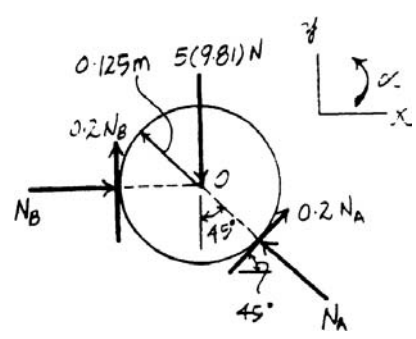

Solving Eqs. (1), (2), and (3) yields;

$$N_A = 51.01\text{ N} \qquad N_B = 28.85\text{ N}$$

$$\alpha = 14.2\text{ rad/s}^2 \qquad \textbf{Ans.}$$

© 2010 Pearson Education, Inc., Upper Saddle River, NJ. All rights reserved. This material is protected under all copyright laws as they currently exist. No portion of this material may be reproduced, in any form or by any means, without permission in writing from the publisher.

17–87. The drum has a weight of 50 lb and a radius of gyration $k_A = 0.4$ ft. A 35-ft-long chain having a weight of 2 lb/ft is wrapped around the outer surface of the drum so that a chain length of $s = 3$ ft is suspended as shown. If the drum is originally at rest, determine its angular velocity after the end B has descended $s = 13$ ft. Neglect the thickness of the chain.

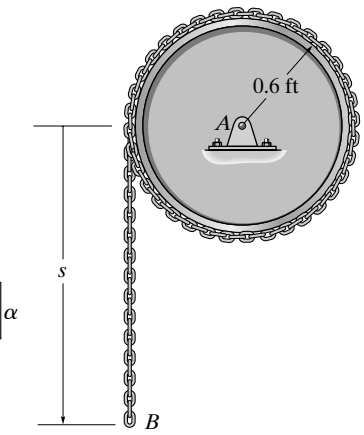

$$\circlearrowleft + \Sigma M_A = \Sigma (M_k)_A; \quad 2s(0.6) = \left(\frac{2s}{32.2}\right)[(\alpha)(0.6)](0.6) + \left[\left(\frac{50}{32.2}\right)(0.4)^2 + \frac{2(35-s)}{32.2}(0.6)^2\right]\alpha$$

$$1.2s = 0.02236s\alpha + (0.24845 + 0.7826 - 0.02236s)\alpha$$

$$1.164s = \alpha$$

$$\alpha\, d\theta = \alpha\left(\frac{ds}{0.6}\right) = \omega\, d\omega$$

$$1.164s\left(\frac{ds}{0.6}\right) = \omega\, d\omega$$

$$1.9398\int_3^{13} s\, ds = \int_0^{\omega} \omega\, d\omega$$

$$1.9398\left[\frac{(13)^2}{2} - \frac{(3)^2}{2}\right] = \frac{1}{2}\omega^2$$

$$\omega = 17.6 \text{ rad/s} \qquad \textbf{Ans.}$$

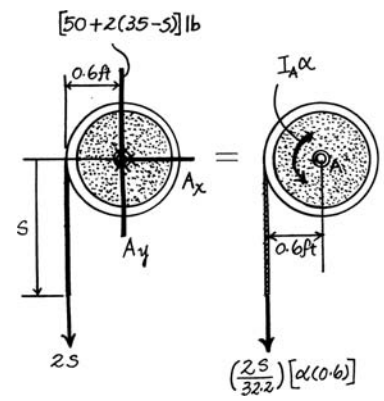

***17–88.** Disk D turns with a constant clockwise angular velocity of 30 rad/s. Disk E has a weight of 60 lb and is initially at rest when it is brought into contact with D. Determine the time required for disk E to attain the same angular velocity as disk D. The coefficient of kinetic friction between the two disks is $\mu_k = 0.3$. Neglect the weight of bar BC.

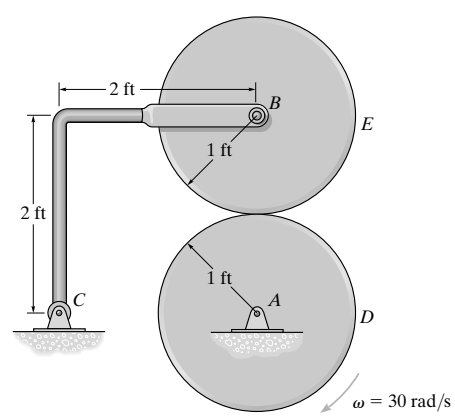

Equations of Motion: The mass moment of inertia of disk E about point B is given by $I_B = \frac{1}{2}mr^2 = \frac{1}{2}\left(\frac{60}{32.2}\right)(1^2) = 0.9317 \text{ slug}\cdot\text{ft}^2$. Applying Eq. 17–16, we have

$$\overset{+}{\rightarrow} \Sigma F_x = m(a_G)_x; \qquad 0.3N - F_{BC}\cos 45° = 0 \qquad \textbf{(1)}$$

$$+\uparrow \Sigma F_y = m(a_G)_y; \qquad N - F_{BC}\sin 45° - 60 = 0 \qquad \textbf{(2)}$$

$$\circlearrowleft + \Sigma M_O = I_O\,\alpha; \qquad 0.3N(1) = 0.9317\alpha \qquad \textbf{(3)}$$

Solving Eqs. (1), (2) and (3) yields:

$$F_{BC} = 36.37 \text{ lb} \qquad N = 85.71 \text{ lb} \qquad \alpha = 27.60 \text{ rad/s}^2$$

Kinematics: Applying equation $\omega = \omega_0 + \alpha_t$, we have

$$(\circlearrowleft +) \qquad 30 = 0 + 27.60t$$

$$t = 1.09 \text{ s} \qquad \textbf{Ans.}$$

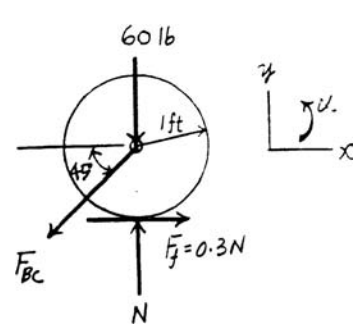

© 2010 Pearson Education, Inc., Upper Saddle River, NJ. All rights reserved. This material is protected under all copyright laws as they currently exist. No portion of this material may be reproduced, in any form or by any means, without permission in writing from the publisher.

•17–89. A 17-kg roll of paper, originally at rest, is supported by bracket AB. If the roll rests against a wall where the coefficient of kinetic friction is $\mu_C = 0.3$, and a constant force of 30 N is applied to the end of the sheet, determine the tension in the bracket as the paper unwraps, and the angular acceleration of the roll. For the calculation, treat the roll as a cylinder.

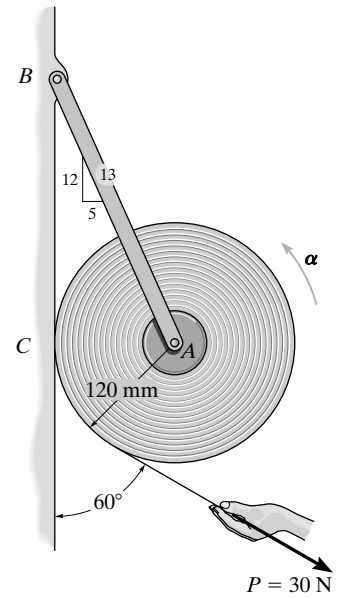

Equations of Motion: The mass moment of inertia of the paper roll about point A is given by $I_A = \frac{1}{2}mr^2 = \frac{1}{2}(17)\left(0.12^2\right) = 0.1224\ \text{kg}\cdot\text{m}^2$. Applying Eq. 17–16, we have

$$\overset{+}{\rightarrow} \Sigma F_x = m(a_G)_x; \qquad N_C - F_{AB}\left(\frac{5}{13}\right) + 30\sin 60^\circ = 0 \qquad \textbf{(1)}$$

$$+\uparrow \Sigma F_y = m(a_G)_y; \qquad 0.3N_C + F_{AB}\left(\frac{12}{13}\right) - 30\cos 60^\circ - 17(9.81) = 0 \qquad \textbf{(2)}$$

$$\circlearrowleft + \Sigma M_A = I_A\,\alpha; \qquad 30(0.12) - 0.3N_C(0.12) = 0.1224\alpha \qquad \textbf{(3)}$$

Solving Eqs. (1), (2), and (3) yields:

$$F_{AB} = 183\ \text{N} \qquad \alpha = 16.4\ \text{rad/s}^2 \qquad \textbf{Ans.}$$

$$N_C = 44.23\ \text{N}$$

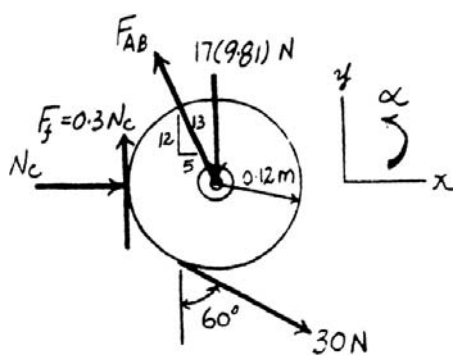

© 2010 Pearson Education, Inc., Upper Saddle River, NJ. All rights reserved. This material is protected under all copyright laws as they currently exist. No portion of this material may be reproduced, in any form or by any means, without permission in writing from the publisher.

17–90. The cord is wrapped around the inner core of the spool. If a 5-lb block B is suspended from the cord and released from rest, determine the spool's angular velocity when $t = 3$ s. Neglect the mass of the cord. The spool has a weight of 180 lb and the radius of gyration about the axle A is $k_A = 1.25$ ft. Solve the problem in two ways, first by considering the "system" consisting of the block and spool, and then by considering the block and spool separately.

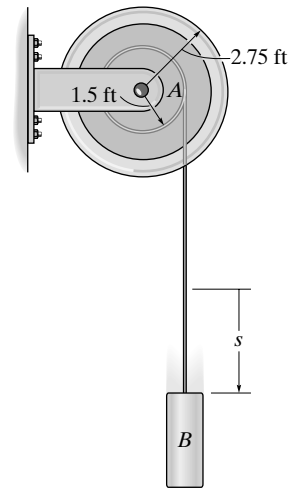

System:

$$\circlearrowright + \Sigma M_A = \Sigma (M_k)_A; \qquad 5(1.5) = \left(\frac{180}{32.2}\right)(1.25)^2\alpha + \left(\frac{5}{32.2}\right)(1.5\alpha)(1.5)$$

$$\alpha = 0.8256 \text{ rad/s}^2$$

$$(\circlearrowright +) \qquad \omega = \omega_0 + a_c t$$

$$\omega = 0 + (0.8256)(3)$$

$$\omega = 2.48 \text{ rad/s}$$ **Ans.**

Also,

Spool:

$$\circlearrowright + \Sigma M_A = I_A \alpha; \qquad T(1.5) = \left(\frac{180}{32.2}\right)(1.25)^2 \alpha$$

Weight:

$$+\downarrow \Sigma F_y = m(a_G)_y; \qquad 5 - T = \left(\frac{5}{32.2}\right)(1.5\alpha)$$

$$\alpha = 0.8256 \text{ rad/s}^2$$

$$(\circlearrowright +) \qquad \omega = \omega_0 + a_c t$$

$$\omega = 0 + (0.8256)(3)$$

$$\omega = 2.48 \text{ rad/s}$$ **Ans.**

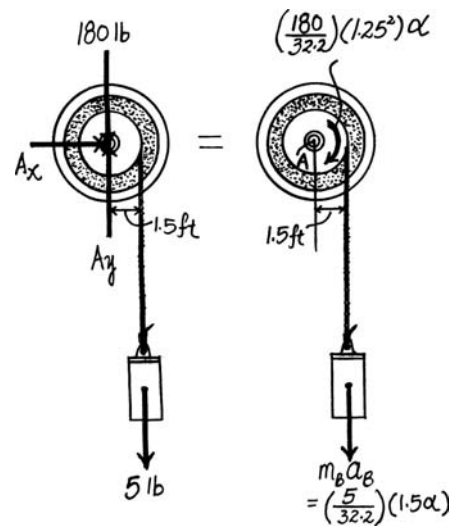

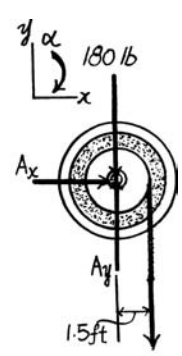

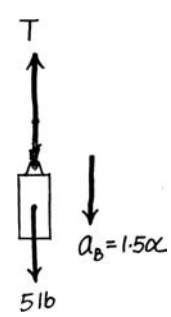

© 2010 Pearson Education, Inc., Upper Saddle River, NJ. All rights reserved. This material is protected under all copyright laws as they currently exist. No portion of this material may be reproduced, in any form or by any means, without permission in writing from the publisher.

17–91. If a disk *rolls without slipping* on a horizontal surface, show that when moments are summed about the instantaneous center of zero velocity, *IC*, it is possible to use the moment equation $\Sigma M_{IC} = I_{IC}\alpha$, where I_{IC} represents the moment of inertia of the disk calculated about the instantaneous axis of zero velocity.

$\circlearrowleft + \Sigma M_{IC} = \Sigma\,(M_k)_{IC}\,; \qquad \Sigma M_{IC} = I_G\,\alpha + (ma_G)r$

Since there is no slipping, $a_G = \alpha r$.

Thus, $\Sigma M_{IC} = (I_G + mr^2)\,\alpha$.

By the parallel-axis theorem, the term in parenthesis represents I_{IC}. Thus,

$$\Sigma M_{IC} = I_{IC}\,\alpha \qquad \textbf{Q.E.D.}$$

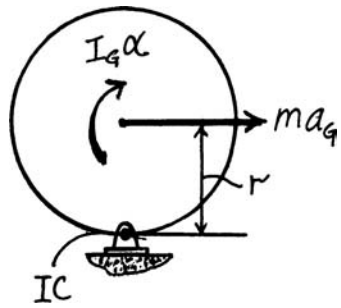

***17–92.** The 10-kg semicircular disk is rotating at $\omega = 4$ rad/s at the instant $\theta = 60°$. Determine the normal and frictional forces it exerts on the ground at *A* at this instant. Assume the disk does not slip as it rolls.

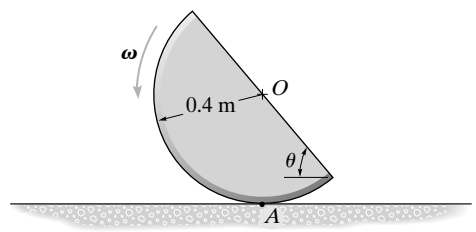

Equations of Motion: The mass moment of inertia of the semicircular disk about its center of mass is given by $I_G = \frac{1}{2}(10)\left(0.4^2\right) - 10\left(0.1698^2\right) = 0.5118\ \text{kg}\cdot\text{m}^2$. From the geometry, $r_{G/A} = \sqrt{0.1698^2 + 0.4^2 - 2(0.1698)(0.4)\cos 60°} = 0.3477$ m. Also, using the law of sines, $\frac{\sin\theta}{0.1698} = \frac{\sin 60°}{0.3477}$, $\theta = 25.01°$. Applying Eq. 17–16, we have

$\circlearrowleft + \Sigma M_A = \Sigma(M_k)_A\,; \qquad 10(9.81)(0.1698\sin 60°) = 0.5118\alpha$

$$+ 10(a_G)_x\cos 25.01°\,(0.3477)$$

$$+ 10(a_G)_y\sin 25.01°(0.3477) \qquad \textbf{(1)}$$

$\xleftarrow{+} \Sigma F_x = m\,(a_G)_x; \qquad F_f = 10(a_G)_x \qquad \textbf{(2)}$

$+\uparrow F_y = m(a_G)_y\,; \qquad N - 10(9.81) = -10(a_G)_y \qquad \textbf{(3)}$

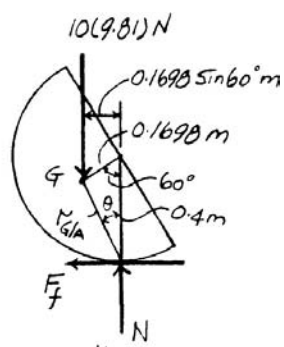

Kinematics: Since the semicircular disk does not slip at *A*, then $(a_A)_x = 0$. Here, $\mathbf{r}_{G/A} = \{-0.3477\sin 25.01°\mathbf{i} + 0.3477\cos 25.01°\mathbf{j}\}$ m $= \{-0.1470\mathbf{i} + 0.3151\mathbf{j}\}$ m. Applying Eq. 16–18, we have

$$\mathbf{a}_G = \mathbf{a}_A + \alpha \times \mathbf{r}_{G/A} - \omega^2\mathbf{r}_{G/A}$$

$$-(a_G)_x\,\mathbf{i} - (a_G)_y\mathbf{j} = 6.40\mathbf{j} + \alpha\mathbf{k} \times (-0.1470\mathbf{i} + 0.3151\mathbf{j}) - 4^2(-0.1470\mathbf{i} + 0.3151\mathbf{j})$$

$$-(a_G)_x\,\mathbf{i} - (a_G)_y\,\mathbf{j} = (2.3523 - 0.3151\alpha)\,\mathbf{i} + (1.3581 - 0.1470\alpha)\mathbf{j}$$

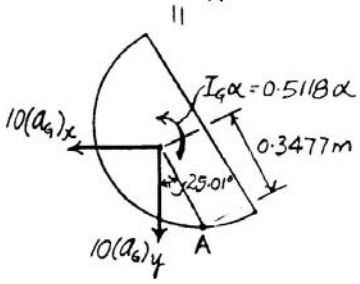

Equating **i** and **j** components, we have

$$(a_G)_x = 0.3151\alpha - 2.3523 \qquad \textbf{(4)}$$

$$(a_G)_y = 0.1470\alpha - 1.3581 \qquad \textbf{(5)}$$

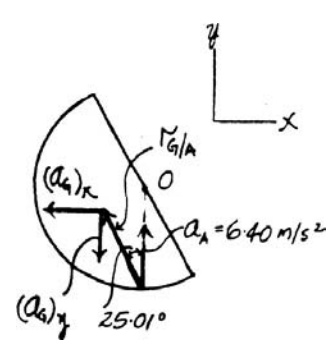

Solving Eqs. (1), (2), (3), (4), and (5) yields:

$\alpha = 13.85\ \text{rad/s}^2 \qquad (a_G)_x = 2.012\ \text{m/s}^2 \qquad (a_G)_y = 0.6779\ \text{m/s}^2$

$F_f = 20.1\ \text{N} \qquad N = 91.3\ \text{N}$ **Ans.**

© 2010 Pearson Education, Inc., Upper Saddle River, NJ. All rights reserved. This material is protected under all copyright laws as they currently exist. No portion of this material may be reproduced, in any form or by any means, without permission in writing from the publisher.

•17–93. The semicircular disk having a mass of 10 kg is rotating at $\omega = 4$ rad/s at the instant $\theta = 60°$. If the coefficient of static friction at A is $\mu_s = 0.5$, determine if the disk slips at this instant.

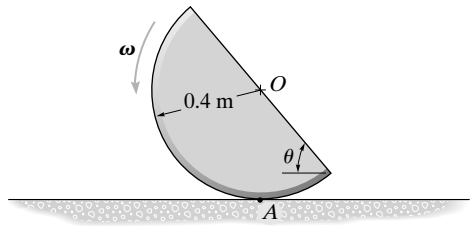

Equations of Motion: The mass moment of inertia of the semicircular disk about its center of mass is given by $I_G = \frac{1}{2}(10)\left(0.4^2\right) - 10\,(0.1698^2) = 0.5118\ \text{kg}\cdot\text{m}^2$. From the geometry, $r_{G/A} = \sqrt{0.1698^2 + 0.4^2 - 2(0.1698)\,(0.4)\cos 60°} = 0.3477$ m Also, using law of sines, $\frac{\sin\theta}{0.1698} = \frac{\sin 60°}{0.3477}$, $\theta = 25.01°$. Applying Eq. 17–16, we have

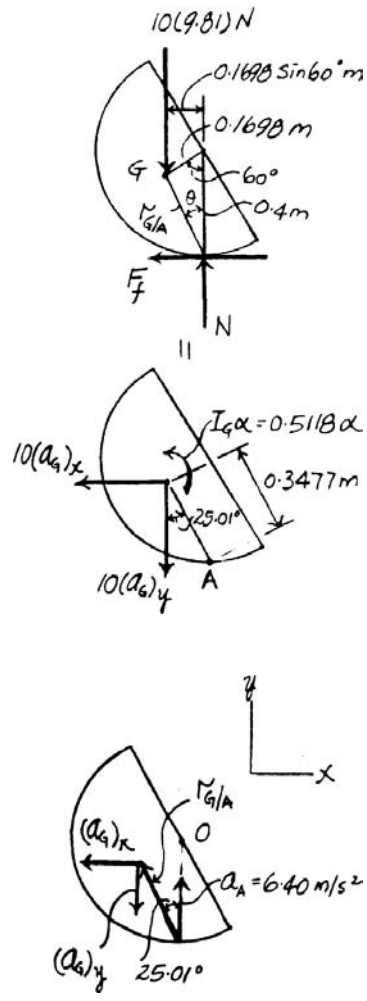

$$\circlearrowleft + \Sigma M_A = \Sigma(M_k)_A\,; \qquad 10(9.81)(0.1698\sin 60°) = 0.5118\alpha + 10(a_G)_x\cos 25.01°(0.3477) + 10(a_G)_y\sin 25.01°(0.3477) \qquad \textbf{(1)}$$

$$\overset{+}{\leftarrow}\Sigma F_x = m(a_G)_x; \qquad F_f = 10(a_G)_x \qquad \textbf{(2)}$$

$$+\uparrow F_y = m(a_G)_y\,; \qquad N - 10(9.81) = -10(a_G)_y \qquad \textbf{(3)}$$

Kinematics: Assume that the semicircular disk does not slip at A, then $(a_A)_x = 0$. Here, $\mathbf{r}_{G/A} = \{-0.3477\sin 25.01°\mathbf{i} + 0.3477\cos 25.01°\mathbf{j}\}$ m $= \{-0.1470\mathbf{i} + 0.3151\mathbf{j}\}$ m. Applying Eq. 16–18, we have

$$\mathbf{a}_G = \mathbf{a}_A + \alpha \times \mathbf{r}_{G/A} - \omega^2\mathbf{r}_{G/A}$$

$$-(a_G)_x\,\mathbf{i} - (a_G)_y\mathbf{j} = 6.40\mathbf{j} + \alpha\mathbf{k} \times (-0.1470\mathbf{i} + 0.3151\mathbf{j}) - 4^2(-0.1470\mathbf{i} + 0.3151\mathbf{j})$$

$$-(a_G)_x\,\mathbf{i} - (a_G)_y\,\mathbf{j} = (2.3523 - 0.3151\,\alpha)\,\mathbf{i} + (1.3581 - 0.1470\alpha)\mathbf{j}$$

Equating **i** and **j** components, we have

$$(a_G)_x = 0.3151\alpha - 2.3523 \qquad \textbf{(4)}$$

$$(a_G)_y = 0.1470\alpha - 1.3581 \qquad \textbf{(5)}$$

Solving Eqs. (1), (2), (3), (4), and (5) yields:

$$\alpha = 13.85\ \text{rad/s}^2 \qquad (a_G)_x = 2.012\ \text{m/s}^2 \qquad (a_G)_y = 0.6779\ \text{m/s}^2$$

$$F_f = 20.12\ \text{N} \qquad N = 91.32\ \text{N}$$

Since $F_f < (F_f)_{\max} = \mu_s N = 0.5(91.32) = 45.66$ N, then the semicircular **disk does not slip**. **Ans.**

© 2010 Pearson Education, Inc., Upper Saddle River, NJ. All rights reserved. This material is protected under all copyright laws as they currently exist. No portion of this material may be reproduced, in any form or by any means, without permission in writing from the publisher.

17–94. The uniform 50-lb board is suspended from cords at C and D. If these cords are subjected to constant forces of 30 lb and 45 lb, respectively, determine the initial acceleration of the board's center and the board's angular acceleration. Assume the board is a thin plate. Neglect the mass of the pulleys at E and F.

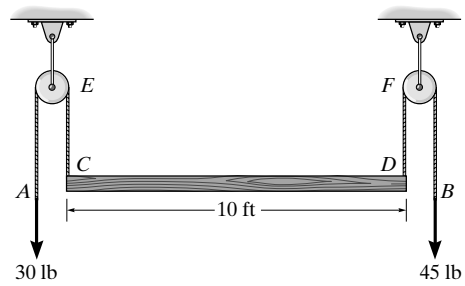

$$+\uparrow \Sigma F_y = m(a_G)_y; \qquad 45 + 30 - 50 = \left(\frac{50}{32.2}\right) a_G$$

$$a_G = 16.1 \text{ ft/s}^2 \qquad \textbf{Ans.}$$

$$\circlearrowleft + \Sigma M_G = I_G\,\alpha; \qquad -30(5) + 45(5) = \left[\frac{1}{12}\left(\frac{50}{32.2}\right)(10)^2\right]\alpha$$

$$\alpha = 5.80 \text{ rad/s}^2 \qquad \textbf{Ans.}$$

17–95. The rocket consists of the main section A having a mass of 10 Mg and a center of mass at G_A. The two identical booster rockets B and C each have a mass of 2 Mg with centers of mass at G_B and G_C, respectively. At the instant shown, the rocket is traveling vertically and is at an altitude where the acceleration due to gravity is $g = 8.75 \text{ m/s}^2$. If the booster rockets B and C suddenly supply a thrust of $T_B = 30$ kN and $T_C = 20$ kN, respectively, determine the angular acceleration of the rocket. The radius of gyration of A about G_A is $k_A = 2$ m and the radii of gyration of B and C about G_B and G_C are $k_B = k_C = 0.75$ m.

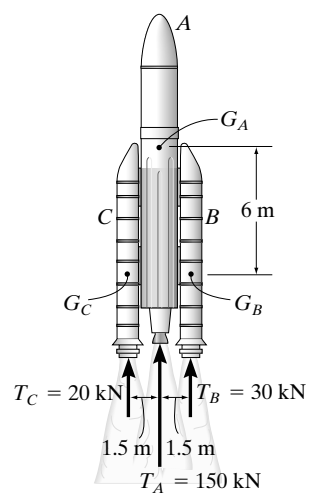

Equations of Motion: The mass moment of inertia of the main section and booster rockets about G is

$$(I_G)_A = 10(10^3)(2^2) + 2\Big(2(10^3)(0.75^2) + 2(10^3)(1.5^2 + 6^2)\Big)$$
$$= 195.25(10^3) \text{ kg}\cdot\text{m}^2$$

$$+\uparrow \Sigma F_y = m(a_G)_y;$$

$$150(10^3) + 20(10^3) + 30(10^3) - \Big[2(10^3) + 2(10^3) + 10(10^3)\Big](8.75) = \Big[2(10^3) + 2(10^3) + 10(10^3)\Big]a$$

$$a = 5.536 \text{ m/s}^2 = 5.54 \text{ m/s}^2\uparrow \qquad \textbf{Ans.}$$

$$+\Sigma(M_G)_A = \Sigma(I_G)_A\,\alpha; \qquad 30(10^3)(1.5) - 20(10^3)(1.5) = 195.25(10^3)\alpha$$

$$\alpha = 0.0768 \text{ rad/s}^2 \qquad \textbf{Ans.}$$

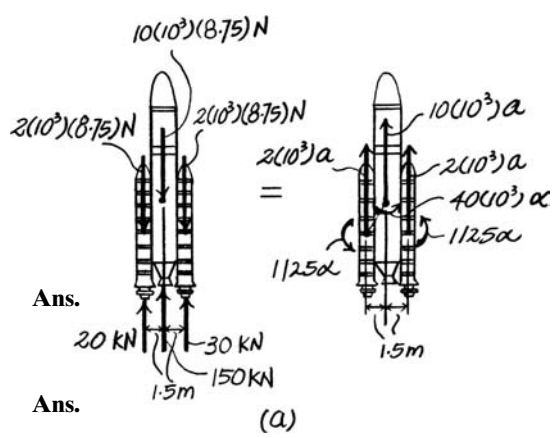

© 2010 Pearson Education, Inc., Upper Saddle River, NJ. All rights reserved. This material is protected under all copyright laws as they currently exist. No portion of this material may be reproduced, in any form or by any means, without permission in writing from the publisher.

***17–96.** The 75-kg wheel has a radius of gyration about the z axis of $k_z = 150$ mm. If the belt of negligible mass is subjected to a force of $P = 150$ N, determine the acceleration of the mass center and the angular acceleration of the wheel. The surface is smooth and the wheel is free to slide.

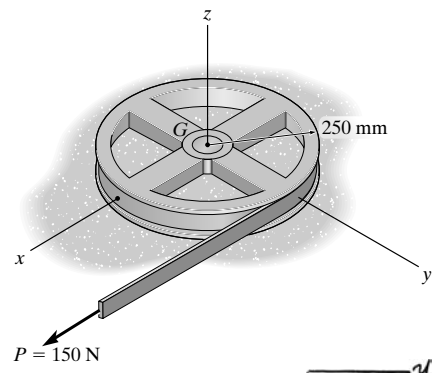

Equations of Motion: The mass moment of inertia of the wheel about the z axis is $(I_G)_z = mk_z{}^2 = 75(0.15^2) = 1.6875\ \text{kg}\cdot\text{m}^2$. Referring to the free-body diagram of the wheel shown in Fig. a, we have

$+\downarrow \Sigma F_x = m(a_G)_x;\qquad 150 = 75a_G \qquad a_G = 2\text{m/s}^2$ **Ans.**

$\circlearrowleft + \Sigma M_G = I_G\alpha;\qquad -150(0.25) = -1.6875\alpha \qquad \alpha = 22.22\ \text{rad/s}^2$ **Ans.**

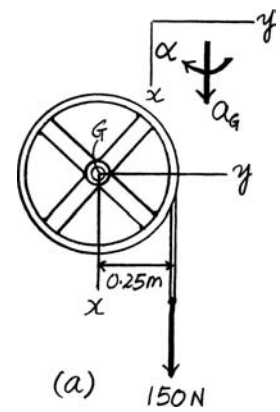

•17–97. The wheel has a weight of 30 lb and a radius of gyration of $k_G = 0.6$ ft. If the coefficients of static and kinetic friction between the wheel and the plane are $\mu_s = 0.2$ and $\mu_k = 0.15$, determine the wheel's angular acceleration as it rolls down the incline. Set $\theta = 12°$.

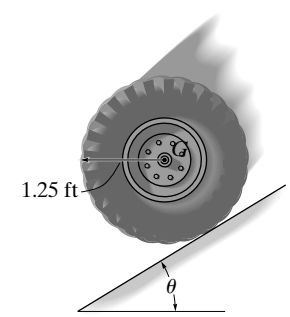

$+\swarrow \Sigma F_x = m(a_G)_x;\qquad 30\sin 12° - F = \left(\dfrac{30}{32.2}\right)a_G$

$_+\nwarrow \Sigma F_y = m(a_G)_y;\qquad N - 30\cos 12° = 0$

$\circlearrowleft + \Sigma M_G = I_G\,\alpha;\qquad F(1.25) = \left[\left(\dfrac{30}{32.2}\right)(0.6)^2\right]\alpha$

Assume the wheel does not slip.

$$a_G = (1.25)\alpha$$

Solving:

$F = 1.17$ lb

$N = 29.34$ lb

$a_G = 5.44\ \text{ft/s}^2$

$\alpha = 4.35\ \text{rad/s}^2$ **Ans.**

$F_{\max} = 0.2(29.34) = 5.87\ \text{lb} > 1.17\ \text{lb}$ **OK**

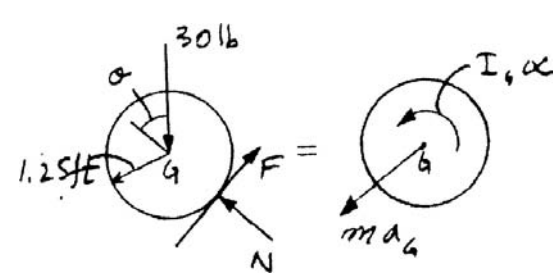

© 2010 Pearson Education, Inc., Upper Saddle River, NJ. All rights reserved. This material is protected under all copyright laws as they currently exist. No portion of this material may be reproduced, in any form or by any means, without permission in writing from the publisher.

17–98. The wheel has a weight of 30 lb and a radius of gyration of $k_G = 0.6$ ft. If the coefficients of static and kinetic friction between the wheel and the plane are $\mu_s = 0.2$ and $\mu_k = 0.15$, determine the maximum angle θ of the inclined plane so that the wheel rolls without slipping.

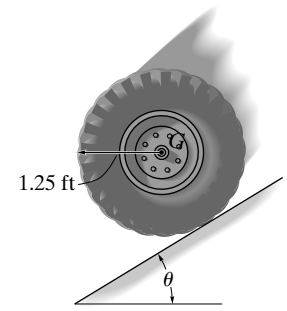

Since wheel is on the verge of slipping:

$$+\swarrow \Sigma F_x = m(a_G)_x; \qquad 30 \sin\theta - 0.2N = \left(\frac{30}{32.2}\right)(1.25\alpha) \qquad \textbf{(1)}$$

$$+\nwarrow \Sigma F_y = m(a_G)_y; \qquad N - 30\cos\theta = 0 \qquad \textbf{(2)}$$

$$\circlearrowleft + \Sigma M_C = I_G\,\alpha; \qquad 0.2N(1.25) = \left[\left(\frac{30}{32.2}\right)(0.6)^2\right]\alpha \qquad \textbf{(3)}$$

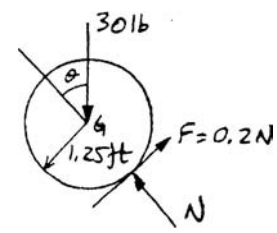

Substituting Eqs.(2) and (3) into Eq. (1),

$$30\sin\theta - 6\cos\theta = 26.042\cos\theta$$

$$30\sin\theta = 32.042\cos\theta$$

$$\tan\theta = 1.068$$

$$\theta = 46.9^\circ \qquad \textbf{Ans.}$$

17–99. Two men exert constant vertical forces of 40 lb and 30 lb at ends A and B of a uniform plank which has a weight of 50 lb. If the plank is originally at rest in the horizontal position, determine the initial acceleration of its center and its angular acceleration. Assume the plank to be a slender rod.

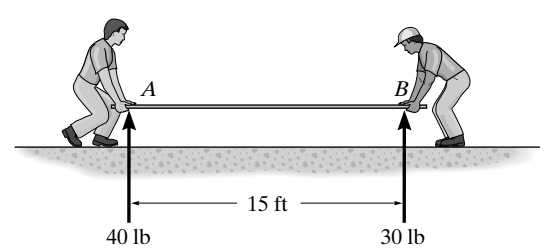

Equations of Motion: The mass moment of inertia of the plank about its mass center is given by $I_G = \frac{1}{12}ml^2 = \frac{1}{12}\left(\frac{50}{32.2}\right)(15^2) = 29.115\ \text{slug}\cdot\text{ft}^2$ Applying Eq. 17–14, we have

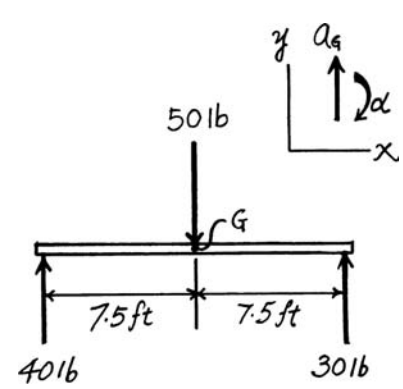

$$+\uparrow \Sigma F_y = m(a_G)_y; \qquad 40 + 30 - 50 = \left(\frac{50}{32.2}\right)a_G$$

$$a_G = 12.9\ \text{ft/s}^2 \qquad \textbf{Ans.}$$

$$\circlearrowleft + \Sigma M_G = I_G\,\alpha; \qquad 30(7.5) - 40(7.5) = -29.115\,\alpha$$

$$\alpha = 2.58\ \text{rad/s}^2 \qquad \textbf{Ans.}$$

© 2010 Pearson Education, Inc., Upper Saddle River, NJ. All rights reserved. This material is protected under all copyright laws as they currently exist. No portion of this material may be reproduced, in any form or by any means, without permission in writing from the publisher.

***17–100.** The circular concrete culvert rolls with an angular velocity of $\omega = 0.5$ rad/s when the man is at the position shown. At this instant the center of gravity of the culvert and the man is located at point G, and the radius of gyration about G is $k_G = 3.5$ ft. Determine the angular acceleration of the culvert. The combined weight of the culvert and the man is 500 lb. Assume that the culvert rolls without slipping, and the man does not move within the culvert.

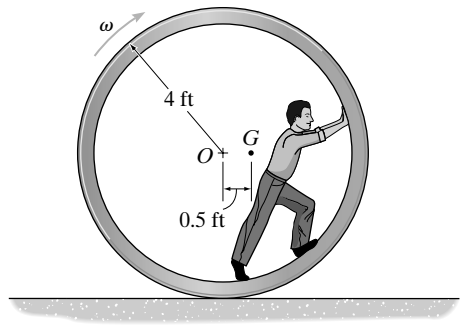

Equations of Motion: The mass moment of inertia of the system about its mass center is $I_G = mk_G{}^2 = \frac{500}{32.2}(3.5^2) = 190.22$ slug · ft^2. Writing the moment equation of motion about point A, Fig. a,

$$+\Sigma M_A = \Sigma(M_k)_A; \quad -500(0.5) = -\frac{500}{32.2}(a_G)_x(4) - \frac{500}{32.2}(a_G)_y(0.5) - 190.22\alpha \quad \textbf{(1)}$$

Kinematics: Since the culvert rolls without slipping,

$$a_0 = \alpha r = \alpha(4) \rightarrow$$

Applying the relative acceleration equation and referring to Fig. b,

$$a_G = a_O + \alpha \times r_{G/O} - \omega^2 \mathbf{r}_{G/A}$$

$$(a_G)_x \mathbf{i} - (a_G)_y \mathbf{j} = 4\alpha\mathbf{i} + (-\alpha\mathbf{k}) \times (0.5\mathbf{i}) - 0.5^2(0.5\mathbf{i})$$

$$(a_G)_x \mathbf{i} - (a_G)_y \mathbf{j} = (4\alpha - 0.125)\mathbf{i} - 0.5\alpha\mathbf{j}$$

Equating the **i** and **j** components,

$$(a_G)_x = 4\alpha - 0.125 \quad \textbf{(2)}$$

$$(a_G)_y = 0.5\alpha \quad \textbf{(3)}$$

Substituting Eqs. (2) and (3) into Eq. (1),

$$-500(0.5) = -\frac{500}{32.2}(4\alpha - 0.125)(4) - \frac{500}{32.2}(0.5\alpha)(0.5) - 190.22\alpha$$

$$\alpha = 0.582 \text{ rad/s}^2 \quad \textbf{Ans.}$$

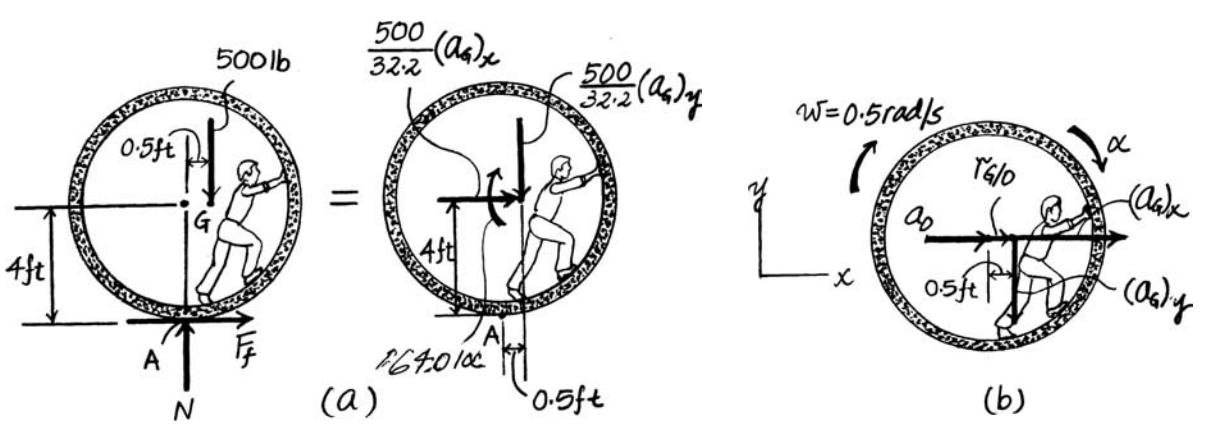

© 2010 Pearson Education, Inc., Upper Saddle River, NJ. All rights reserved. This material is protected under all copyright laws as they currently exist. No portion of this material may be reproduced, in any form or by any means, without permission in writing from the publisher.

•17–101. The lawn roller has a mass of 80 kg and a radius of gyration $k_G = 0.175$ m. If it is pushed forward with a force of 200 N when the handle is at 45°, determine its angular acceleration. The coefficients of static and kinetic friction between the ground and the roller are $\mu_s = 0.12$ and $\mu_k = 0.1$, respectively.

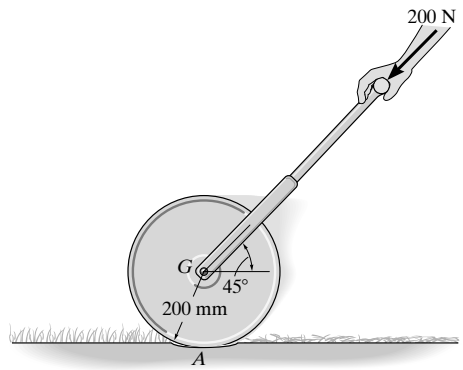

$\overset{+}{\leftarrow} \Sigma F_x = m(a_G)_x;$ $\quad 200 \cos 45° - F_A = 80 a_G$

$+\uparrow \Sigma F_y = m(a_G)_y;$ $\quad N_A - 80(9.81) - 200 \sin 45° = 0$

$\circlearrowleft + \Sigma M_G = I_G \alpha;$ $\quad F_A(0.2) = 80(0.175)^2 \alpha$

Assume no slipping: $a_G = 0.2\alpha$

$F_A = 61.32$ N

$N_A = 926.2$ N

$\alpha = 5.01$ rad/s^2 **Ans.**

$(F_A)_{\max} = \mu_s N_A = 0.12(926.2) = 111.1 \text{ N} > 61.32 \text{ N}$ **OK**

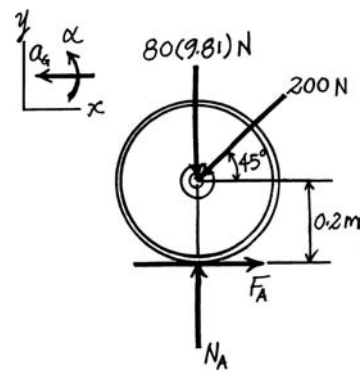

17–102. Solve Prob. 17–101 if $\mu_s = 0.6$ and $\mu_k = 0.45$.

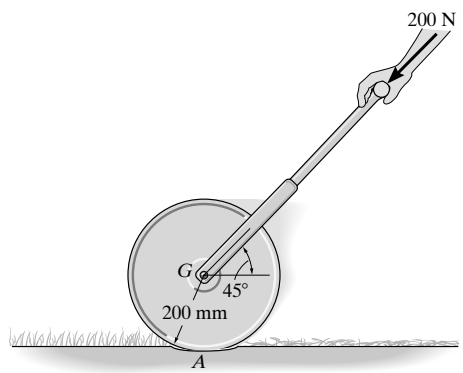

$\overset{+}{\leftarrow} \Sigma F_x = m(a_G)_x;$ $\quad 200 \cos 45° - F_A = 80 a_G$

$+\uparrow \Sigma F_y = m(a_G)_y;$ $\quad N_A - 80(9.81) - 200 \sin 45° = 0$

$\circlearrowleft + \Sigma M_G = I_G \alpha;$ $\quad F_A(0.2) = 80(0.175)^2 \alpha$

Assume no slipping: $a_G = 0.2\,\alpha$

$F_A = 61.32$ N

$N_A = 926.2$ N

$\alpha = 5.01$ rad/s^2 **Ans.**

$(F_A)_{\max} = \mu_s N_A = 0.6(926.2 \text{ N}) = 555.7 \text{ N} > 61.32 \text{ N}$ **OK**

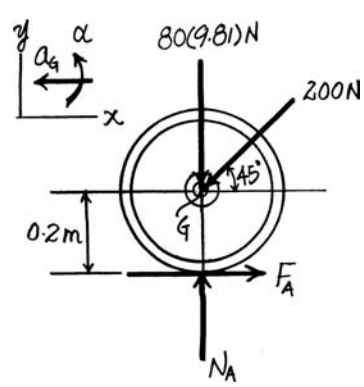

© 2010 Pearson Education, Inc., Upper Saddle River, NJ. All rights reserved. This material is protected under all copyright laws as they currently exist. No portion of this material may be reproduced, in any form or by any means, without permission in writing from the publisher.

17–103. The spool has a mass of 100 kg and a radius of gyration of $k_G = 0.3$ m. If the coefficients of static and kinetic friction at A are $\mu_s = 0.2$ and $\mu_k = 0.15$, respectively, determine the angular acceleration of the spool if $P = 50$ N.

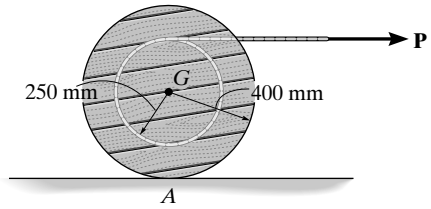

$\xrightarrow{+} \Sigma F_x = m(a_G)_x;\qquad 50 + F_A = 100a_G$

$+\uparrow \Sigma F_y = m(a_G)_y;\qquad N_A - 100(9.81) = 0$

$\circlearrowleft + \Sigma M_G = I_G\alpha;\qquad 50(0.25) - F_A(0.4) = [100(0.3)^2]\alpha$

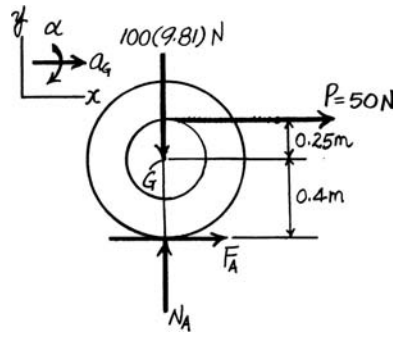

Assume no slipping: $a_G = 0.4\alpha$

$\alpha = 1.30\ \text{rad/s}^2$ **Ans.**

$a_G = 0.520\ \text{m/s}^2 \qquad N_A = 981\ \text{N} \qquad F_A = 2.00\ \text{N}$

Since $(F_A)_{\max} = 0.2(981) = 196.2\ \text{N} > 2.00\ \text{N}$ **OK**

***17–104.** Solve Prob. 17–103 if the cord and force $P = 50$ N are directed vertically upwards.

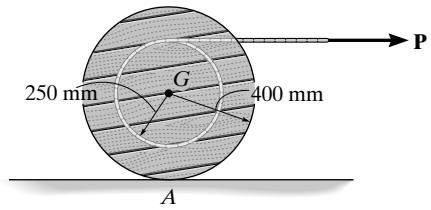

$\xrightarrow{+} \Sigma F_x = m(a_G)_x;\qquad F_A = 100a_G$

$+\uparrow \Sigma F_y = m(a_G)_y;\qquad N_A + 50 - 100(9.81) = 0$

$\circlearrowleft + \Sigma M_G = I_G\alpha;\qquad 50(0.25) - F_A(0.4) = [100(0.3)^2]\alpha$

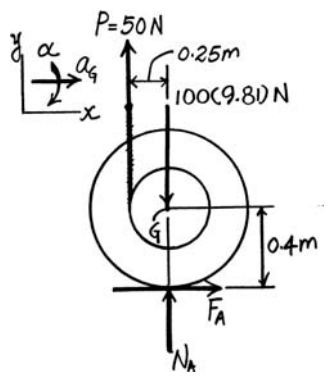

Assume no slipping: $a_G = 0.4\,\alpha$

$\alpha = 0.500\ \text{rad/s}^2$ **Ans.**

$a_G = 0.2\ \text{m/s}^2 \qquad N_A = 931\ \text{N} \qquad F_A = 20\ \text{N}$

Since $(F_A)_{\max} = 0.2(931) = 186.2\ \text{N} > 20\ \text{N}$ **OK**

© 2010 Pearson Education, Inc., Upper Saddle River, NJ. All rights reserved. This material is protected under all copyright laws as they currently exist. No portion of this material may be reproduced, in any form or by any means, without permission in writing from the publisher.

•17–105. The spool has a mass of 100 kg and a radius of gyration $k_G = 0.3$ m. If the coefficients of static and kinetic friction at A are $\mu_s = 0.2$ and $\mu_k = 0.15$, respectively, determine the angular acceleration of the spool if $P = 600$ N.

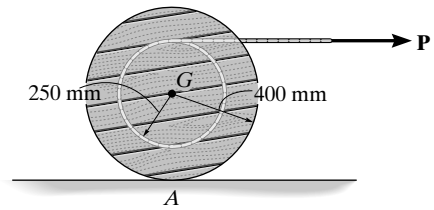

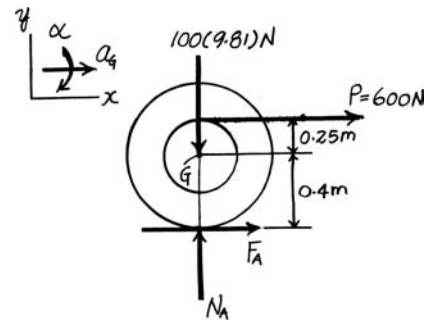

$\xrightarrow{+} \Sigma F_x = m(a_G)_x;\qquad 600 + F_A = 100a_G$

$+\uparrow \Sigma F_y = m(a_G)_y;\qquad N_A - 100(9.81) = 0$

$\circlearrowleft + \Sigma M_G = I_G\,\alpha;\qquad 600(0.25) - F_A(0.4) = [100(0.3)^2]\alpha$

Assume no slipping: $a_G = 0.4\alpha$

$\alpha = 15.6\ \text{rad/s}^2$ **Ans.**

$a_G = 6.24\ \text{m/s}^2 \qquad N_A = 981\ \text{N} \qquad F_A = 24.0\ \text{N}$

Since $(F_A)_{\max} = 0.2(981) = 196.2\ \text{N} > 24.0\ \text{N}$ **OK**

17–106. The truck carries the spool which has a weight of 500 lb and a radius of gyration of $k_G = 2$ ft. Determine the angular acceleration of the spool if it is not tied down on the truck and the truck begins to accelerate at 3 ft/s^2. Assume the spool does not slip on the bed of the truck.

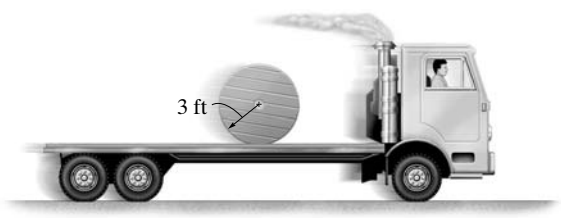

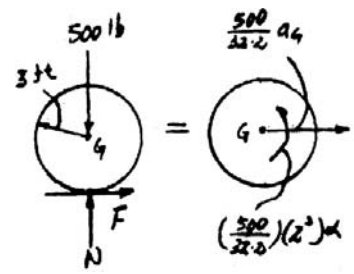

$\xrightarrow{+} \Sigma F_x = m(a_G)_x;\qquad F = \left(\dfrac{500}{32.2}\right)a_G$ **(1)**

$\circlearrowleft + \Sigma M_G = I_G\,\alpha;\qquad F(3) = \left(\dfrac{500}{32.2}\right)(2)^2\,\alpha$ **(2)**

$$\mathbf{a}_A = \mathbf{a}_G + (\mathbf{a}_{A/G})_t + (\mathbf{a}_{A/G})_n$$

$$\left[\underset{\rightarrow}{(a_A)_t}\right] + \left[\underset{\uparrow}{(a_A)_n}\right] = \left[\underset{\rightarrow}{a_G}\right] + \left[\underset{\rightarrow}{3\alpha}\right] + \left[\underset{\uparrow}{(a_{A/G})_n}\right]$$

$\left(\xrightarrow{+}\right)\quad 3 = a_G + 3\alpha$ **(3)**

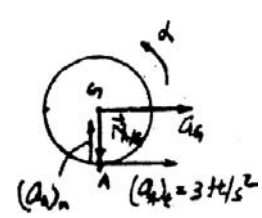

Solving Eqs. (1), (2), and (3) yields:

$F = 14.33\ \text{lb} \qquad a_G = 0.923\ \text{ft/s}^2$

$\alpha = 0.692\ \text{rad/s}^2.$ **Ans.**

© 2010 Pearson Education, Inc., Upper Saddle River, NJ. All rights reserved. This material is protected under all copyright laws as they currently exist. No portion of this material may be reproduced, in any form or by any means, without permission in writing from the publisher.

17–107. The truck carries the spool which has a weight of 200 lb and a radius of gyration of $k_G = 2$ ft. Determine the angular acceleration of the spool if it is not tied down on the truck and the truck begins to accelerate at 5 ft/s^2. The coefficients of static and kinetic friction between the spool and the truck bed are $\mu_s = 0.15$ and $\mu_k = 0.1$, respectively.

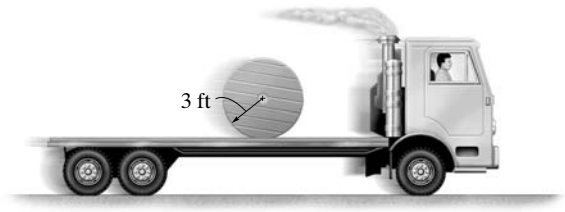

$+\uparrow \Sigma F_y = m(a_G)_y; \qquad N - 200 = 0 \qquad N = 200 \text{ lb}$

$\overset{+}{\rightarrow} \Sigma F_x = m(a_G)_x; \qquad F = \left(\frac{200}{32.2}\right)a_G$ **(1)**

$\circlearrowleft + \Sigma M_G = I_G\alpha; \qquad F(3) = \left(\frac{200}{32.2}\right)(2)^2\alpha$ **(2)**

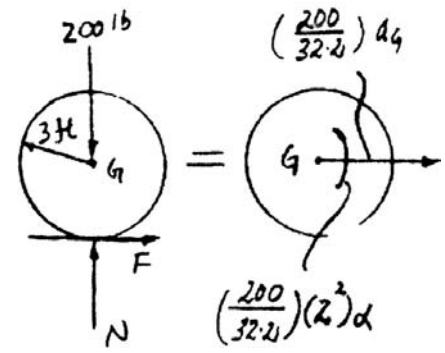

Assume no slipping occurs at the point of contact. Hence, $(a_A)_t = 5$ ft/s^2.

$$\mathbf{a}_A = \mathbf{a}_G + (\mathbf{a}_{A/G})_t + (\mathbf{a}_{A/G})_n$$

$$\left[(a_A)_t\right] + \left[(a_A)_n\right] = \left[a_G\right] + \left[3\alpha\right] + \left[(a_{A/G})_n\right]$$

$\left(\overset{+}{\rightarrow}\right) \quad 5 = a_G + 3\alpha$ **(3)**

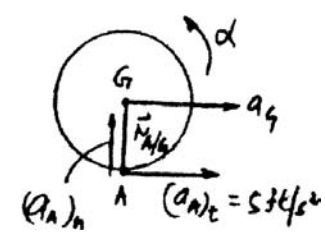

Solving Eqs. (1), (2), and (3) yields:

$F = 9.556$ lb $\qquad a_G = 1.538$ ft/s^2

$\alpha = 1.15$ rad/s^2 **Ans.**

Since $F_{max} = (200 \text{ lb})(0.15) = 30 \text{ lb} > 9.556 \text{ lb}$ **OK**

***17–108.** A uniform rod having a weight of 10 lb is pin supported at A from a roller which rides on a horizontal track. If the rod is originally at rest, and a horizontal force of $F = 15$ lb is applied to the roller, determine the acceleration of the roller. Neglect the mass of the roller and its size d in the computations.

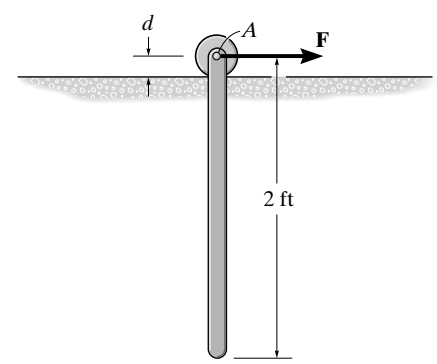

Equations of Motion: The mass moment of inertia of the rod about its mass center is given by $I_G = \frac{1}{12}ml^2 = \frac{1}{12}\left(\frac{10}{32.2}\right)(2^2) = 0.1035$ slug · ft^2. At the instant force **F** is applied, the angular velocity of the rod $\omega = 0$. Thus, the normal component of acceleration of the mass center for the rod $(a_G)_n = 0$. Applying Eq. 17–16, we have

$\Sigma F_t = m(a_G)_t; \qquad 15 = \left(\frac{10}{32.2}\right)a_G \quad a_G = 48.3 \text{ ft/s}^2$

$\circlearrowleft + \Sigma M_A = \Sigma(M_k)_A; \qquad 0 = \left(\frac{10}{32.2}\right)(48.3)(1) - 0.1035\,\alpha$

$\alpha = 144.9$ rad/s^2

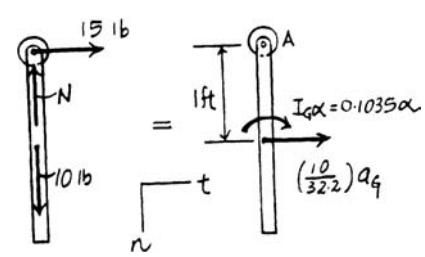

Kinematics: Since $\omega = 0$, $(a_{G/A})_n = 0$. The acceleration of roller A can be obtain by analyzing the motion of points A and G. Applying Eq. 16–17, we have

$$\mathbf{a}_G = \mathbf{a}_A + (\mathbf{a}_{G/A})_t + (\mathbf{a}_{G/A})_n$$

$$\left[48.3\right] = \left[a_A\right] + \left[144.9(1)\right] + \left[0\right]$$

$(\overset{+}{\rightarrow}) \qquad 48.3 = a_A - 144.9$

$a_A = 193$ ft/s^2 **Ans.**

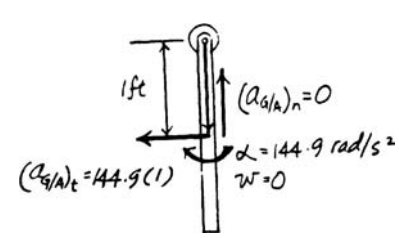

© 2010 Pearson Education, Inc., Upper Saddle River, NJ. All rights reserved. This material is protected under all copyright laws as they currently exist. No portion of this material may be reproduced, in any form or by any means, without permission in writing from the publisher.

•17–109. Solve Prob. 17–108 assuming that the roller at A is replaced by a slider block having a negligible mass. The coefficient of kinetic friction between the block and the track is $\mu_k = 0.2$. Neglect the dimension d and the size of the block in the computations.

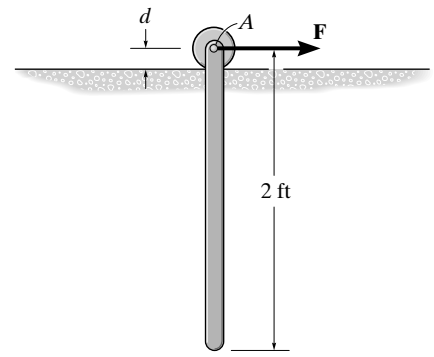

Equations of Motion: The mass moment of inertia of the rod about its mass center is given by $I_G = \frac{1}{12}ml^2 = \frac{1}{12}\left(\frac{10}{32.2}\right)(2^2) = 0.1035\ \text{slug}\cdot\text{ft}^2$. At the instant force **F** is applied, the angular velocity of the rod $\omega = 0$. Thus, the normal component of acceleration of the mass center for the rod $(a_G)_n = 0$. Applying Eq. 17–16, we have

$$\Sigma F_n = m(a_G)_n; \qquad 10 - N = 0 \qquad N = 10.0\ \text{lb}$$

$$\Sigma F_t = m(a_G)_t; \qquad 15 - 0.2(10.0) = \left(\frac{10}{32.2}\right)a_G \qquad a_G = 41.86\ \text{ft/s}^2$$

$$\circlearrowleft + \Sigma M_A = \Sigma(M_k)_A; \quad 0 = \left(\frac{10}{32.2}\right)(41.86)(1) - 0.1035\alpha$$

$$\alpha = 125.58\ \text{rad/s}^2$$

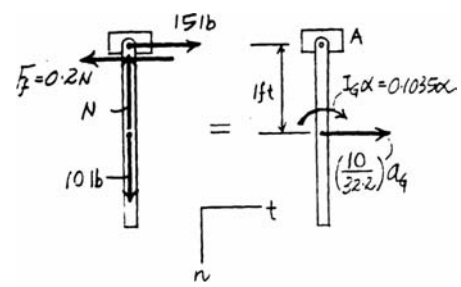

Kinematics: Since $\omega = 0$, $(a_{G/A})_n = 0$. The acceleration of block A can be obtain by analyzing the motion of points A and G. Applying Eq. 16–17, we have

$$\mathbf{a}_G = \mathbf{a}_A + (\mathbf{a}_{G/A})_t + (\mathbf{a}_{G/A})_n$$

$$\left[41.86\ \underset{\rightarrow}{}\right] = \left[a_A\ \underset{\rightarrow}{}\right] + \left[125.58(1)\ \underset{\leftarrow}{}\right] + \left[0\right]$$

$$(\overset{+}{\rightarrow}) \qquad 41.86 = a_A - 125.58$$

$$a_A = 167\ \text{ft/s}^2 \qquad \textbf{Ans.}$$

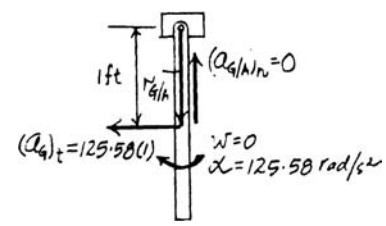

17–110. The ship has a weight of $4(10^6)$ lb and center of gravity at G. Two tugboats of negligible weight are used to turn it. If each tugboat pushes on it with a force of $T = 2000$ lb, determine the initial acceleration of its center of gravity G and its angular acceleration. Its radius of gyration about its center of gravity is $k_G = 125$ ft. Neglect water resistance.

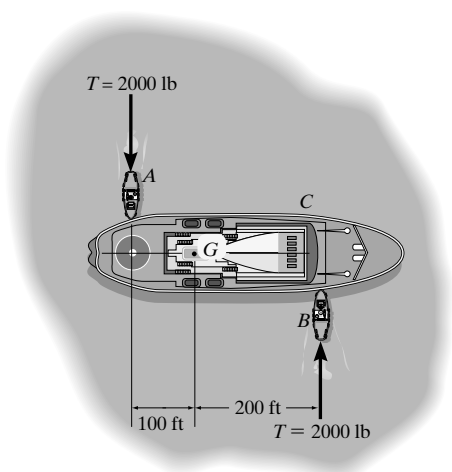

Equations of Motion: Here, the mass moment of inertia of the ship about its mass center is $I_G = mk_G{}^2 = \frac{4(10^6)}{32.2}(125^2) = 1.941(10^9)\ \text{slug}\cdot\text{ft}^2$. Referring to the free-body diagrams of the ship shown in Fig. a,

$$+\uparrow \Sigma F_y = m(a_G)_y; \qquad 2000 - 2000 = \frac{4\left(10^6\right)}{32.2}a$$

$$a = 0 \qquad \textbf{Ans.}$$

$$\circlearrowleft + \Sigma M_G = I_G\alpha; \qquad 2000(100) + 2000(200) = 1.941\left(10^9\right)\alpha$$

$$\alpha = 0.30912\left(10^{-3}\right)\ \text{rad/s}^2 = 0.309\left(10^{-3}\right)\ \text{rad/s}^2 \qquad \textbf{Ans.}$$

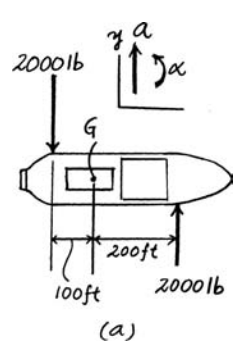

© 2010 Pearson Education, Inc., Upper Saddle River, NJ. All rights reserved. This material is protected under all copyright laws as they currently exist. No portion of this material may be reproduced, in any form or by any means, without permission in writing from the publisher.

17–111. The 15-lb cylinder is initially at rest on a 5-lb plate. If a couple moment $M = 40$ lb · ft is applied to the cylinder, determine the angular acceleration of the cylinder and the time needed for the end B of the plate to travel 3 ft to the right and strike the wall. Assume the cylinder does not slip on the plate, and neglect the mass of the rollers under the plate.

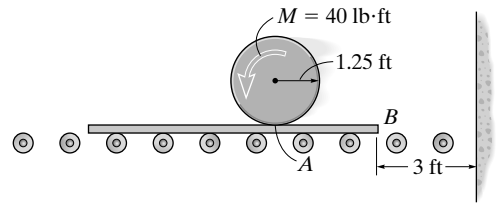

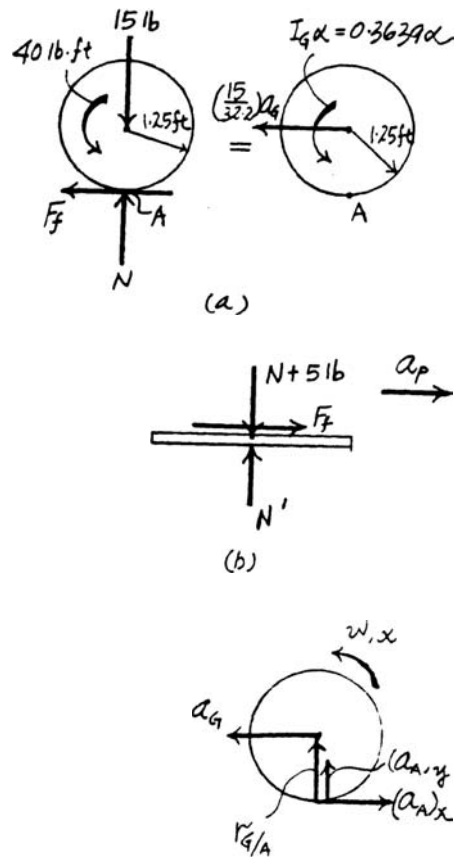

Equation of Motions: The mass moment of inertia of the cylinder about its mass center is given by $I_G = \frac{1}{2}mr^2 = \frac{1}{2}\left(\frac{15}{32.2}\right)(1.25^2) = 0.3639 \text{ slug} \cdot \text{ft}^2$. Applying Eq. 17–16 to the cylinder [FBD(a)], we have

$$\circlearrowleft + \Sigma M_A = \Sigma (M_k)_A; \qquad -40 = -\left(\frac{15}{32.2}\right)a_G(1.25) - 0.3639\alpha \qquad \textbf{(1)}$$

$$\overset{+}{\leftarrow} \Sigma F_x = m(a_G)_x; \qquad F_f = \left(\frac{15}{32.2}\right)a_G \qquad \textbf{(2)}$$

Applying the equation of motion to the place [FBD(b)], we have

$$\overset{+}{\rightarrow} \Sigma F_x = ma_x; \qquad F_f = \left(\frac{5}{32.2}\right)a_P \qquad \textbf{(3)}$$

Kinematics: Analyzing the motion of points G and A by applying Eq. 16–18 with $\mathbf{r}_{G/A} = \{1.25\mathbf{j}\}$ ft, we have

$$\mathbf{a}_G = \mathbf{a}_A + \alpha \times \mathbf{r}_{G/A} - \omega^2 \mathbf{r}_{G/A}$$

$$-a_G\mathbf{i} = (a_A)_x\mathbf{i} + (a_A)_y\mathbf{j} + \alpha\mathbf{k} \times (1.25\mathbf{j}) - \omega^2(1.25\mathbf{j})$$

$$-a_G\mathbf{i} = \left[(a_A)_x - 1.25\alpha\right]\mathbf{i} + \left[(a_A)_y - 1.25\,\omega^2\right]\mathbf{j}$$

Equating **i** components, we have

$$a_G = 1.25\alpha - (a_A)_x \qquad \textbf{(4)}$$

Since the cylinder rolls without slipping on the plate, then $a_P = (a_A)_x$. Substitute into Eq. (4) yields

$$a_G = 1.25\,\alpha - a_P \qquad \textbf{(5)}$$

Solving Eqs. (1), (2), (3), and (5) yields:

$$\alpha = 73.27 \text{ rad/s}^2 \qquad \textbf{Ans.}$$

$$a_G = 22.90 \text{ ft/s}^2 \qquad a_P = 68.69 \text{ ft/s}^2 \qquad F_f = 10.67 \text{ lb}$$

The time required for the plate to travel 3 ft is given by

$$s = s_o + v_o t + \frac{1}{2}a_P t^2$$

$$3 = 0 + 0 + \frac{1}{2}(68.69)t^2$$

$$t = 0.296 \text{ s} \qquad \textbf{Ans.}$$

© 2010 Pearson Education, Inc., Upper Saddle River, NJ. All rights reserved. This material is protected under all copyright laws as they currently exist. No portion of this material may be reproduced, in any form or by any means, without permission in writing from the publisher.

***17–112.** The assembly consists of an 8-kg disk and a 10-kg bar which is pin connected to the disk. If the system is released from rest, determine the angular acceleration of the disk. The coefficients of static and kinetic friction between the disk and the inclined plane are $\mu_s = 0.6$ and $\mu_k = 0.4$, respectively. Neglect friction at B.

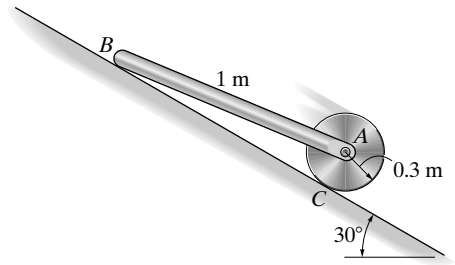

Equation of Motions:

Disk:

$+\searrow \Sigma F_x = m(a_G)_x\,; \qquad A_x - F_C + 8(9.81)\sin 30° = 8a_G$ **(1)**

$+\nearrow \Sigma F_y = m(a_G)_y\,; \qquad N_C - A_y - 8(9.81)\cos 30° = 0$ **(2)**

$\circlearrowleft + \Sigma M_A = I_A\alpha; \qquad F_C(0.3) = \left[\frac{1}{2}(8)(0.3)^2\right]\alpha$ **(3)**

Bar:

$+\searrow \Sigma F_x = m(a_G)_x\,; \qquad 10(9.81)\sin 30° - A_x = 10a_G$ **(4)**

$+\nearrow \Sigma F_y = m(a_G)_y; \qquad N_B + A_y - 10(9.81)\cos 30° = 0$ **(5)**

$\circlearrowleft + \Sigma M_G = I_G\alpha; \qquad -N_B(0.5\cos 17.46°) + A_x(0.5\sin 17.46°)$

$+ A_y(0.5\cos 17.46°) = 0$ **(6)**

Kinematics: Assume no slipping of the disk:

$a_G = 0.3\alpha$ **(7)**

Solving Eqs. (1) through (7):

$A_x = 8.92\text{ N} \qquad A_y = 41.1\text{ N} \qquad N_B = 43.9\text{ N}$

$a_G = 4.01\text{ m/s}^2$

$\alpha = 13.4\text{ rad/s}^2$ **Ans.**

$N_C = 109\text{ N}$

$F_C = 16.1\text{ N}$

$(F_C)_{\max} = 0.6(109) = 65.4\text{ N} > 16.1\text{ N}$ **OK**

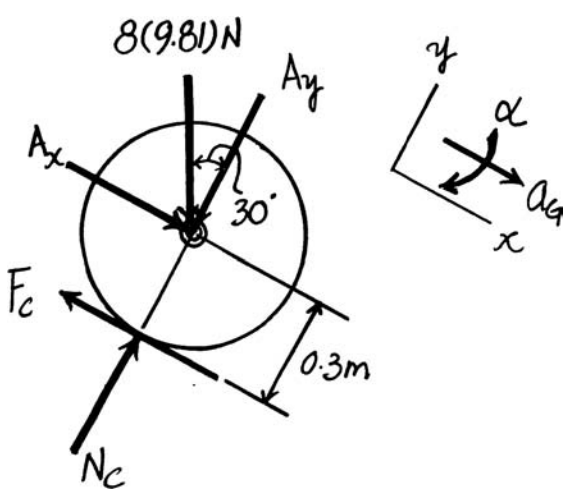

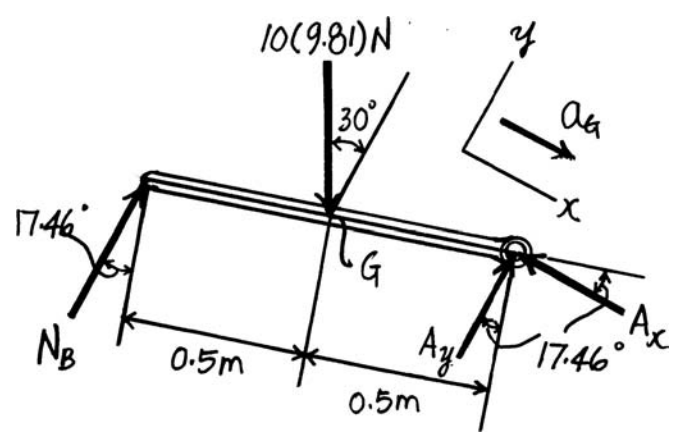

© 2010 Pearson Education, Inc., Upper Saddle River, NJ. All rights reserved. This material is protected under all copyright laws as they currently exist. No portion of this material may be reproduced, in any form or by any means, without permission in writing from the publisher.

•17–113. Solve Prob. 17–112 if the bar is removed. The coefficients of static and kinetic friction between the disk and inclined plane are $\mu_s = 0.15$ and $\mu_k = 0.1$, respectively.

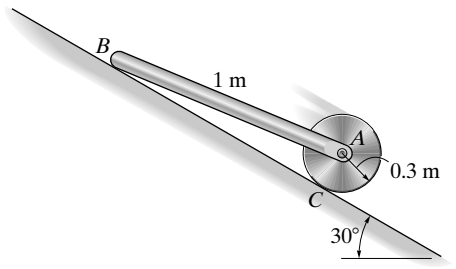

Equation of Motions:

$+\searrow \Sigma F_x = m(a_G)_x;\qquad 8(9.81)\sin 30° - F_C = 8a_G$ **(1)**

$+\nearrow \Sigma F_y = m(a_G)_y;\qquad -8(9.81)\cos 30° + N_C = 0$ **(2)**

$\circlearrowleft + \Sigma M_G = I_G\alpha;\qquad F_C\,(0.3) = \left[\frac{1}{2}(8)(0.3)^2\right]\alpha$ **(3)**

Kinematics: Assume no slipping: $a_G = 0.3\alpha$

Solving Eqs. (1)–(3):

$N_C = 67.97$ N

$a_G = 3.27$ m/s^2

$\alpha = 10.9$ rad/s^2

$F_C = 13.08$ N

$(F_C)_{\max} = 0.15(67.97) = 10.2 \text{ N} < 13.08 \text{ N}$ **NG**

Slipping occurs:

$F_C = 0.1N_C$

Solving Eqs. (1) through (3):

$N_C = 67.97$ N

$\alpha = 5.66$ rad/s^2 **Ans.**

$a_G = 4.06$ m/s^2

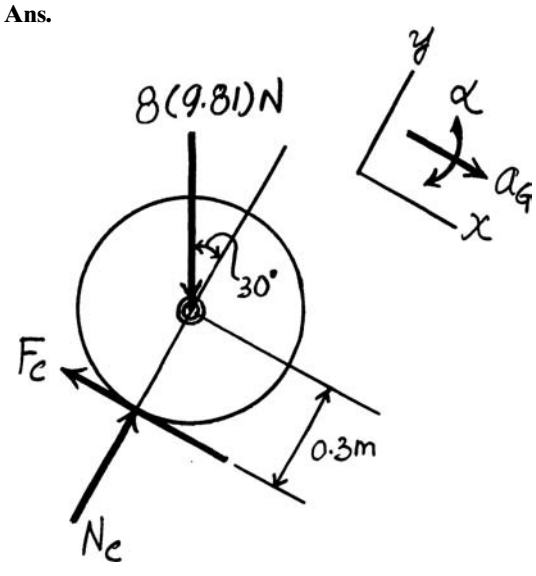

© 2010 Pearson Education, Inc., Upper Saddle River, NJ. All rights reserved. This material is protected under all copyright laws as they currently exist. No portion of this material may be reproduced, in any form or by any means, without permission in writing from the publisher.

17–114. The 20-kg disk A is attached to the 10-kg block B using the cable and pulley system shown. If the disk rolls without slipping, determine its angular acceleration and the acceleration of the block when they are released. Also, what is the tension in the cable? Neglect the mass of the pulleys.

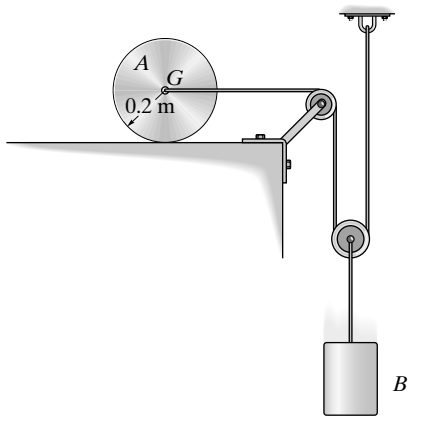

Equation of Motions:

Disk:

$$\circlearrowleft + \Sigma M_{IC} = \Sigma (M_k)_{IC}\,; \qquad T(0.2) = -\left[\frac{1}{2}(20)(0.2)^2 + 20(0.2)^2\right]\alpha \qquad \textbf{(1)}$$

Block:

$$+\downarrow \Sigma F_y = m(a_G)_y\,; \qquad 10(9.81) - 2T = 10a_B \qquad \textbf{(2)}$$

Kinematics:

$$2s_B + s_A = l$$
$$2a_B = -a_A$$

Also,

$$a_A = 0.2\alpha$$

Thus,

$$a_B = -0.1\alpha \qquad \textbf{(3)}$$

Note the direction for α and a_B are the same for all equations.

Solving Eqs. (1) through (3):

$$a_B = 0.755 \text{ m/s}^2 = 0.755 \text{ m/s}^2 \downarrow \qquad \textbf{Ans.}$$

$$\alpha = -7.55 \text{ rad/s}^2 = 7.55 \text{ rad/s}^2 \circlearrowright \qquad \textbf{Ans.}$$

$$T = 45.3 \text{ N} \qquad \textbf{Ans.}$$

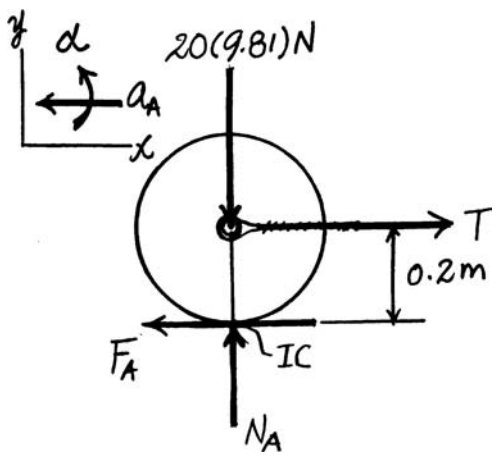

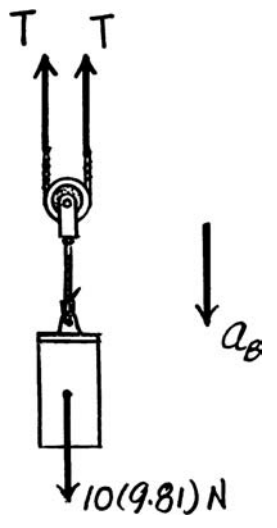

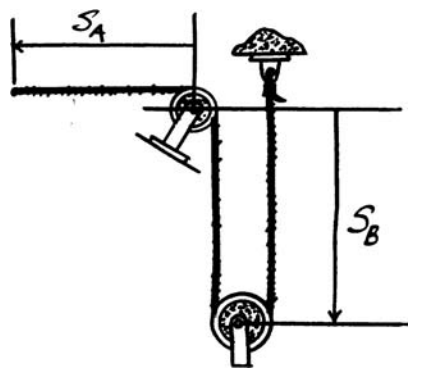

© 2010 Pearson Education, Inc., Upper Saddle River, NJ. All rights reserved. This material is protected under all copyright laws as they currently exist. No portion of this material may be reproduced, in any form or by any means, without permission in writing from the publisher.

17–115. Determine the minimum coefficient of static friction between the disk and the surface in Prob. 17–114 so that the disk will roll without slipping. Neglect the mass of the pulleys.

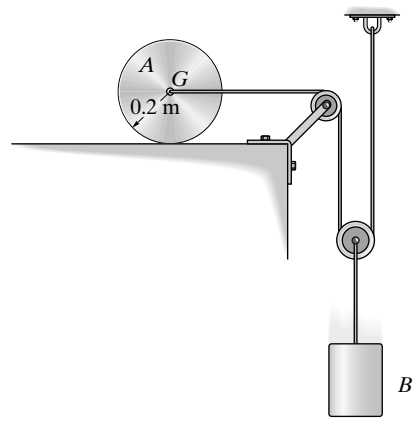

Equation of Motions:

Disk:

$$\circlearrowleft + \Sigma M_{IC} = \Sigma (M_k)_{IC}; \quad T(0.2) = -\left[\frac{1}{2}(20)(0.2)^2 + 20(0.2)^2\right]\alpha \qquad \textbf{(1)}$$

$$\overset{+}{\leftarrow} \Sigma F_x = m(a_G)_x; \qquad -T + F_A = 20a_A$$

$$+\uparrow \Sigma F_y = m(a_G)_y; \qquad N_A - 20(9.81) = 0$$

Block:

$$+\downarrow \Sigma F_y = m(a_G)_y; \qquad 10(9.81) - 2T = 10a_B \qquad \textbf{(2)}$$

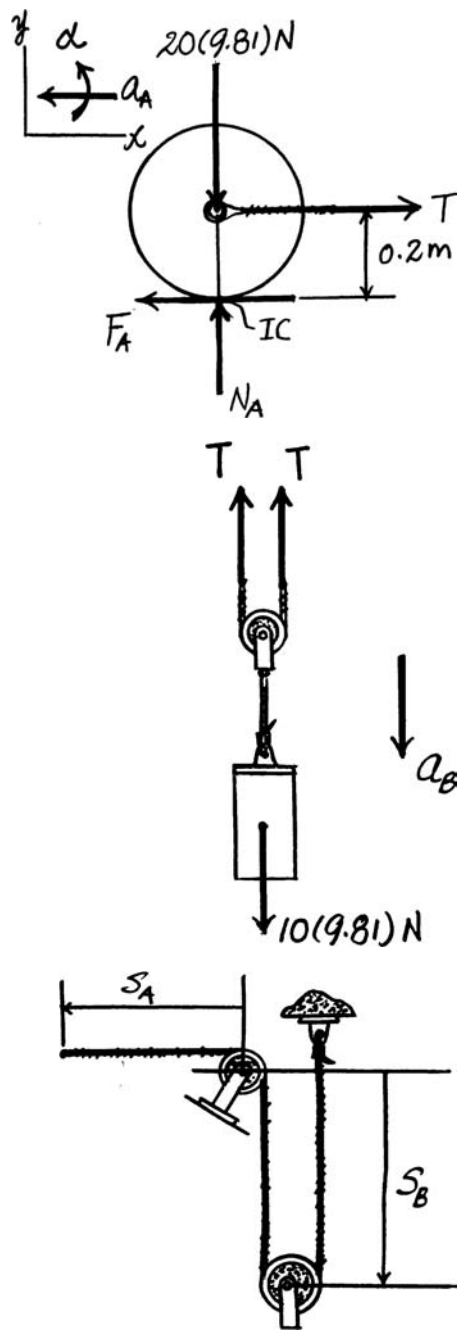

Kinematics:

$$2s_B + s_A = l$$

$$2a_B = -a_A$$

Also,

$$a_A = 0.2\alpha$$

Thus,

$$a_B = -0.1\alpha \qquad \textbf{(3)}$$

Note the direction for α and a_B are the same for all equations. Solving Eqs. (1) through (3):

$$a_B = 0.755 \text{ m/s}^2$$

$$\alpha = -7.55 \text{ rad/s}^2$$

$$T = 45.3 \text{ N}$$

Also,

$$a_A = 0.2(-7.55) = -1.509 \text{ m/s}^2, \qquad N_A = 196.2 \text{ N}, \qquad F_A = 15.09 \text{ N}$$

$$\mu_{\min} = \frac{15.09}{196.2} = 0.0769 \qquad \textbf{Ans.}$$

© 2010 Pearson Education, Inc., Upper Saddle River, NJ. All rights reserved. This material is protected under all copyright laws as they currently exist. No portion of this material may be reproduced, in any form or by any means, without permission in writing from the publisher.

***17–116.** The 20-kg square plate is pinned to the 5-kg smooth collar. Determine the initial angular acceleration of the plate when $P = 100$ N is applied to the collar. The plate is originally at rest.

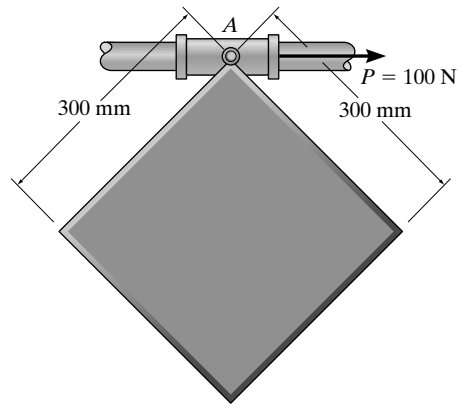

Equations of Motion: The mass moment of inertia of the plate about its mass center is $I_G = \frac{1}{12} m\left(a^2 + b^2\right) = \frac{1}{12}(20)\left(0.3^2 + 0.3^2\right) = 0.3 \text{ kg}\cdot\text{m}^2$.

$$\xrightarrow{+} \Sigma F_x = m(a_G)_x; \qquad 100 = 5a_A + 20(a_G)_x \qquad \textbf{(1)}$$

$$\circlearrowleft + \Sigma M_A = \Sigma(\mu_k)_A; \qquad 0 = 20(a_G)_x(0.3 \sin 45°) - 0.3\alpha \qquad \textbf{(2)}$$

Kinematics: Applying the relative acceleration equation and referring to Fig. *b*,

$$a_G = a_A + \alpha \times \mathbf{r}_{G/A} - \omega^2 \mathbf{r}_{G/A}$$

$$(a_G)_x \mathbf{i} + (a_G)_y \mathbf{j} = a_A\mathbf{i} + (-\alpha\mathbf{k}) \times (-0.3 \sin 45° \mathbf{j}) - 0$$

$$(a_G)_x \mathbf{i} + (a_G)_y \mathbf{j} = (a_A - 0.2121\alpha)\mathbf{i}$$

Equating the **i** and **j** components,

$$(a_G)_x = a_A - 0.2121\alpha \qquad \textbf{(3)}$$

$$(a_G)_y = 0$$

Solving Eqs. (1) through (3) yields:

$$a_A = 10 \text{ m/s}^2 \rightarrow$$

$$(a_G)_x = 2.5 \text{ m/s}^2 \rightarrow$$

$$\alpha = 35.4 \text{ rad/s}^2 \qquad \textbf{Ans.}$$

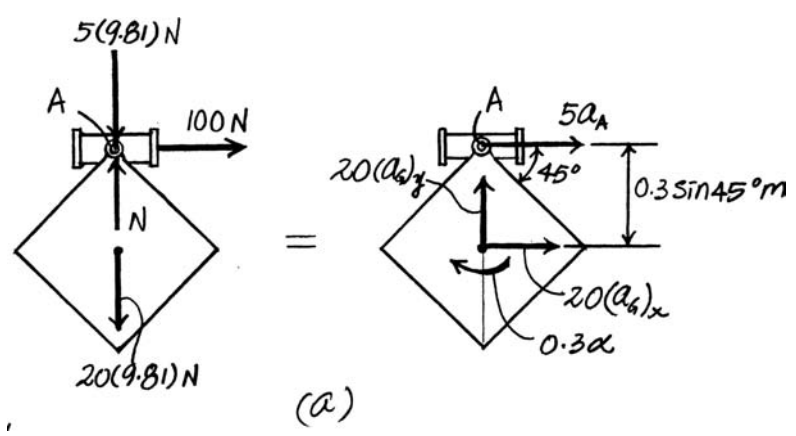

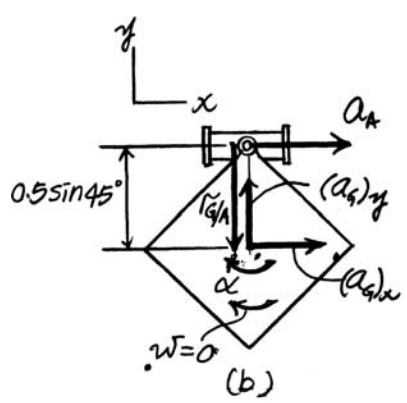

© 2010 Pearson Education, Inc., Upper Saddle River, NJ. All rights reserved. This material is protected under all copyright laws as they currently exist. No portion of this material may be reproduced, in any form or by any means, without permission in writing from the publisher.

•17–117. The 20-kg square plate is pinned to the 5-kg smooth collar. Determine the initial acceleration of the collar when $P = 100$ N is applied to the collar. The plate is originally at rest.

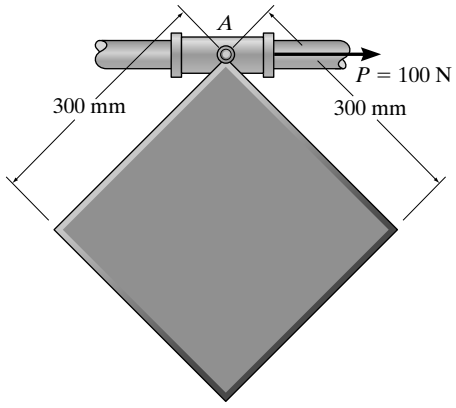

Equations of Motion: The mass moment of inertia of the plate about its mass center is $I_G = \frac{1}{12}m\left(a^2 + b^2\right) = \frac{1}{12}(20)\left(0.3^2 + 0.3^2\right) = 0.3\ \text{kg}\cdot\text{m}^2$.

$\overset{+}{\rightarrow} \Sigma F_x = m(a_G)_x; \qquad 100 = 5a_x + 20(a_G)_x$ **(1)**

$\circlearrowleft + \Sigma M_A = \Sigma(\mu_k)_A; \qquad 0 = 20(a_G)_x(0.3\sin 45°) - 0.3\alpha$ **(2)**

Kinematics: Applying the relative acceleration equation and referring to Fig. *b*,

$$a_G = a_A + \alpha \times \mathbf{r}_{G/A} - \omega^2\mathbf{r}_{G/A}$$

$$(a_G)_x\,\mathbf{i} + (a_G)_y\,\mathbf{j} = a_A\mathbf{i} + (-\alpha\mathbf{k}) \times (-0.3\sin 45°\mathbf{j}) - 0$$

$$(a_G)_x\,\mathbf{i} + (a_G)_y\,\mathbf{j} = (a_A - 0.2121\alpha)\mathbf{i}$$

Equating the **i** and **j** components,

$$(a_G)_x = a_A - 0.2121\alpha \qquad \textbf{(3)}$$

$$(a_G)_y = 0$$

Solving Eqs. (1) through (3) yields

$a_A = 10\ \text{m/s}^2 \rightarrow$ **Ans.**

$(a_G)_x = 2.5\ \text{m/s}^2 \rightarrow$

$\alpha = 35.4\ \text{rad/s}^2$

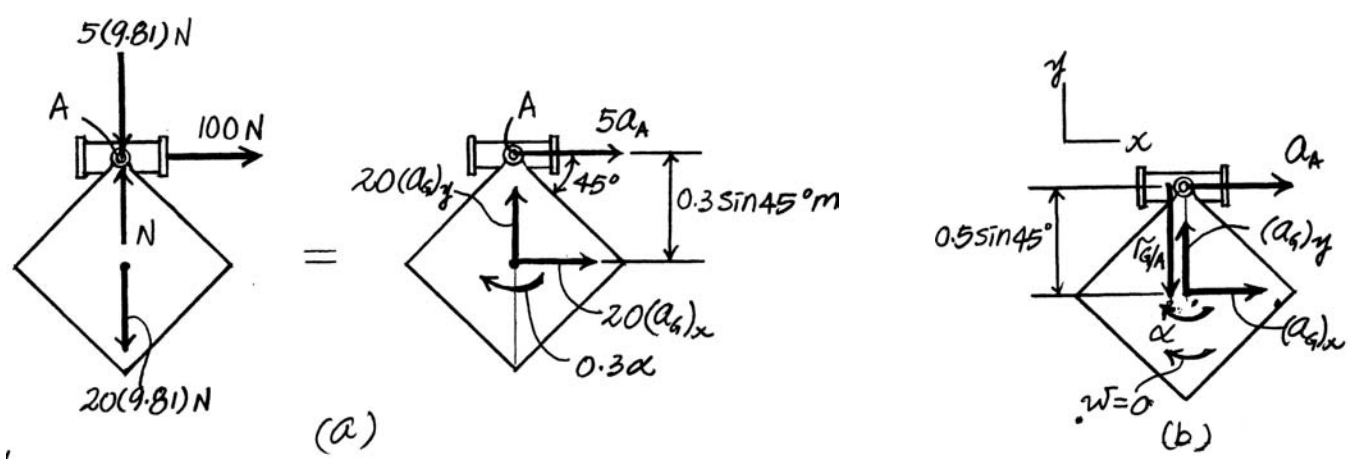

© 2010 Pearson Education, Inc., Upper Saddle River, NJ. All rights reserved. This material is protected under all copyright laws as they currently exist. No portion of this material may be reproduced, in any form or by any means, without permission in writing from the publisher.

17–118. The spool has a mass of 100 kg and a radius of gyration of $k_G = 200$ mm about its center of mass G. If a vertical force of $P = 200$ N is applied to the cable, determine the acceleration of G and the angular acceleration of the spool. The coefficients of static and kinetic friction between the rail and the spool are $\mu_s = 0.3$ and $\mu_k = 0.25$, respectively.

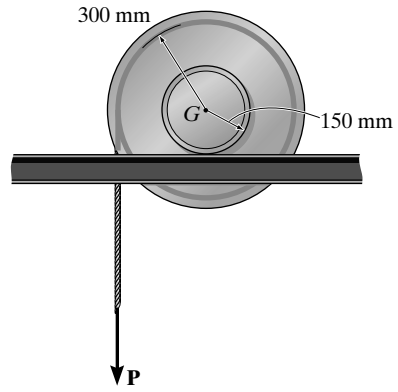

Equations of Motion: The mass moment of inertia of the spool about its mass center is $I_G = mk_G{}^2 = 100\left(0.2^2\right) = 4\ \text{kg}\cdot\text{m}^2$.

$\overset{+}{\leftarrow} \Sigma F_x = m(a_G)_x;\qquad F_f = 100a_G$ **(1)**

$+\uparrow \Sigma F_y = m(a_G)_y;\qquad N - 100(9.81) - 200 = 0\qquad N = 1181\ \text{N}$

$\circlearrowleft + \Sigma M_G = I_G\alpha;\qquad 200(0.3) - F_f(0.15) = 4\alpha$ **(2)**

Kinematics: Assuming that the spool rolls without slipping on the rail,

$$a_G = \alpha r_G = \alpha(0.15) \qquad \textbf{(3)}$$

Solving Eqs. (1) through (3) yields:

$$\alpha = 9.60\ \text{rad/s}^2 \qquad \textbf{Ans.}$$

$$a_G = 1.44\ \text{m/s}^2 \leftarrow \qquad \textbf{Ans.}$$

$$F_f = 144\ \text{N}$$

Since $F_f < \mu_k N = 0.3(1181) = 354.3$ N, the spool does not slip as assumed.

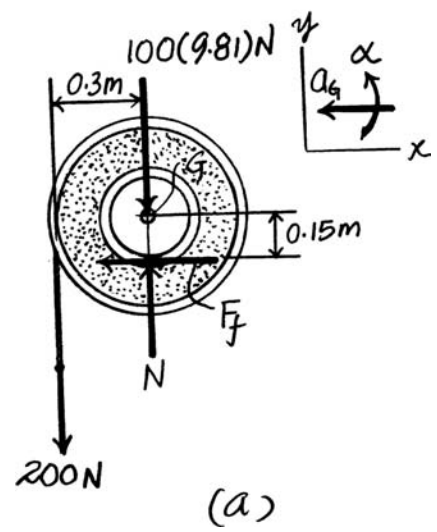

(a)

© 2010 Pearson Education, Inc., Upper Saddle River, NJ. All rights reserved. This material is protected under all copyright laws as they currently exist. No portion of this material may be reproduced, in any form or by any means, without permission in writing from the publisher.

17–119. The spool has a mass of 100 kg and a radius of gyration of $k_G = 200$ mm about its center of mass G. If a vertical force of $P = 500$ N is applied to the cable, determine the acceleration of G and the angular acceleration of the spool. The coefficients of static and kinetic friction between the rail and the spool are $\mu_s = 0.2$ and $\mu_k = 0.15$, respectively.

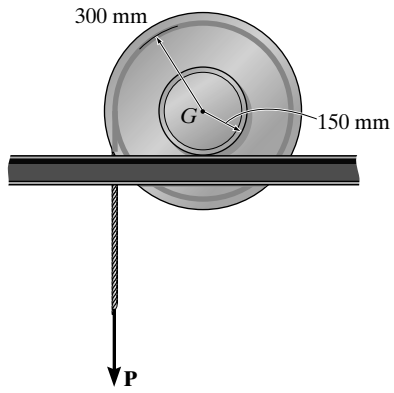

Equations of Motion: The mass moment of inertia of the spool about its mass center is $I_G = mk_G{}^2 = 100\left(0.2^2\right) = 4\ \text{kg}\cdot\text{m}^2$.

$\overset{+}{\leftarrow} \Sigma F_x = m(a_G)_x;\qquad F_f = 100\,a_G$ **(1)**

$+\uparrow \Sigma F_y = m(a_G)_y;\qquad N - 100(9.81) - 500 = 0\qquad N = 1481\ \text{N}$

$\circlearrowleft + \Sigma M_G = I_G\alpha;\qquad 500(0.3) - F_f(0.15) = 4\alpha$ **(2)**

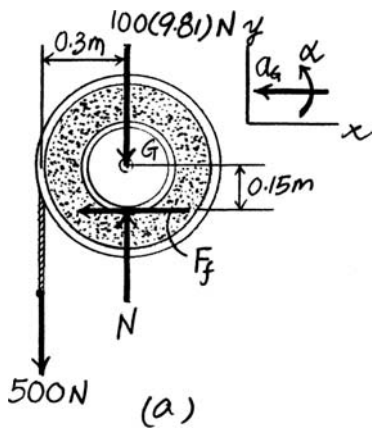

Kinematics: Assuming that the spool rolls without slipping on the rail,

$$a_G = \alpha r_G = \alpha(0.15) \qquad \textbf{(3)}$$

Solving Eqs. (1) through (3) yields:

$\alpha = 24\ \text{rad/s}^2\qquad a_G = 3.6\ \text{m/s}^2\qquad F_f = 360\ \text{N}$

Since $F_f > \mu_k N = 0.2(1481) = 296.2$ N, the spool slips. Thus, the solution must be reworked using $F_f = \mu_k N = 0.15(1481) = 222.15$ N. Substituting this result into Eqs. (1) and (2),

$222.15 = 100a_G\qquad a_G = 2.22\ \text{m/s}^2 \leftarrow$ **Ans.**

$500(0.3) - 222.15(0.15) = 4\alpha\qquad \alpha = 29.17\ \text{rad/s}^2 = 29.2\ \text{rad/s}^2$ **Ans.**

© 2010 Pearson Education, Inc., Upper Saddle River, NJ. All rights reserved. This material is protected under all copyright laws as they currently exist. No portion of this material may be reproduced, in any form or by any means, without permission in writing from the publisher.

***17–120.** If the truck accelerates at a constant rate of $6\,\text{m/s}^2$, starting from rest, determine the initial angular acceleration of the 20-kg ladder. The ladder can be considered as a uniform slender rod. The support at B is smooth.

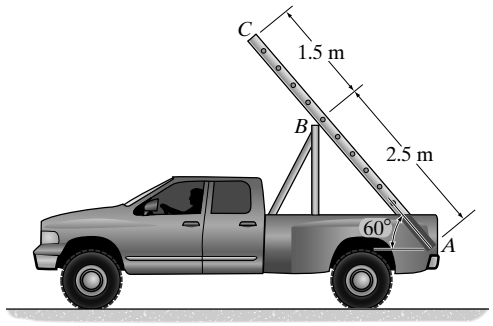

Equations of Motion: We must first show that the ladder will rotate when the acceleration of the truck is 6 m/s^2. This can be done by determining the minimum acceleration of the truck that will cause the ladder to lose contact at B, $N_B = 0$. Writing the moment equation of motion about point A using Fig. a,

$$\circlearrowleft + \Sigma M_A = \Sigma (M_k)_A; \qquad 20(9.81)\cos 60°(2) = 20a_{\min}(2\sin 60°)$$

$$a_{\min} = 5.664\text{ m/s}^2$$

Since $a_{\min} < 6\text{ m/s}^2$, the ladder will in the fact rotate. The mass moment of inertia about its mass center is $I_G = \frac{1}{12}ml^2 = \frac{1}{12}(20)\left(4^2\right) = 26.67\text{ kg}\cdot\text{m}^2$. Referring to Fig. b,

$$\circlearrowleft + \Sigma M_A = \Sigma (M_k)_A; \qquad 20(9.81)\cos 60°(2) = -20(a_G)_x(2\sin 60°)$$

$$-\,20(a_G)_y(2\cos 60°) - 26.67\alpha \qquad \textbf{(1)}$$

Kinematics: The acceleration of A is equal to that of the truck. Thus, $a_A = 6\text{ m/s}^2 \leftarrow$. Applying the relative acceleration equation and referring to Fig. c,

$$\mathbf{a}_G = \mathbf{a}_A + \alpha \times \mathbf{r}_{G/A} - \omega^2\mathbf{r}_{G/A}$$

$$(a_G)_x\mathbf{i} + (a_G)_y\mathbf{j} = -6\mathbf{i} + (-\alpha\mathbf{k}) \times (-2\cos 60°\,\mathbf{i} + 2\sin 60°\,\mathbf{j}) - \mathbf{0}$$

$$(a_G)_x\mathbf{i} + (a_G)_y\mathbf{j} = (2\sin 60°\,\alpha - 6)\mathbf{i} + \alpha\mathbf{j}$$

Equating the **i** and **j** components,

$$(a_G)_x = 2\sin 60°\,\alpha - 6 \qquad \textbf{(2)}$$

$$(a_G)_y = \alpha \qquad \textbf{(3)}$$

Substituting Eqs. (2) and (3) into Eq. (1),

$$\alpha = 0.1092\text{ rad/s}^2 = 0.109\text{ rad/s}^2 \qquad \textbf{Ans.}$$

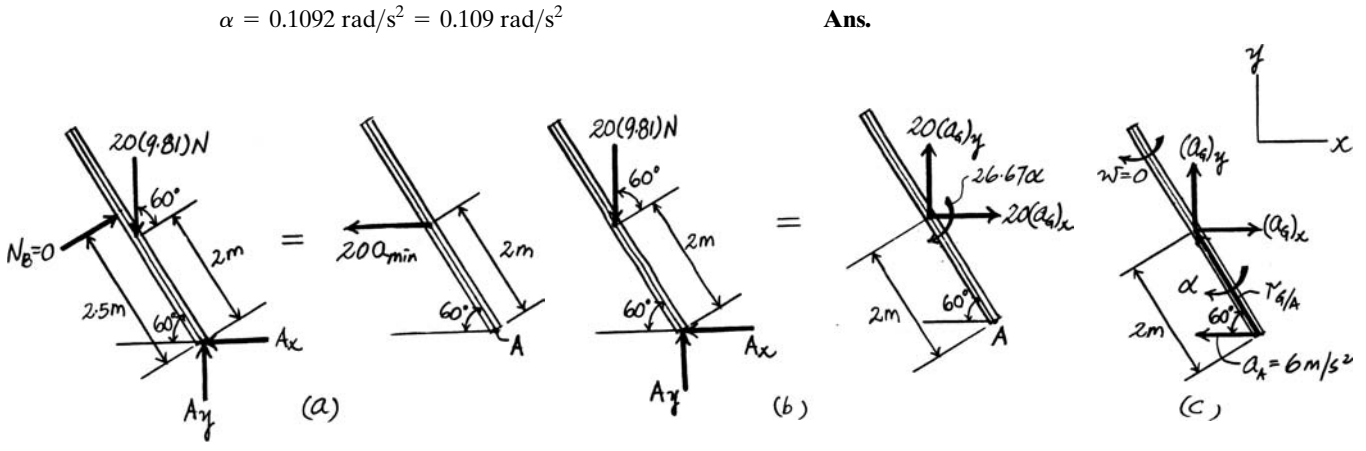

© 2010 Pearson Education, Inc., Upper Saddle River, NJ. All rights reserved. This material is protected under all copyright laws as they currently exist. No portion of this material may be reproduced, in any form or by any means, without permission in writing from the publisher.

•17–121. The 75-kg wheel has a radius of gyration about its mass center of $k_G = 375$ mm. If it is subjected to a torque of $M = 100\ \text{N}\cdot\text{m}$, determine its angular acceleration. The coefficients of static and kinetic friction between the wheel and the ground are $\mu_s = 0.2$ and $\mu_k = 0.15$, respectively.

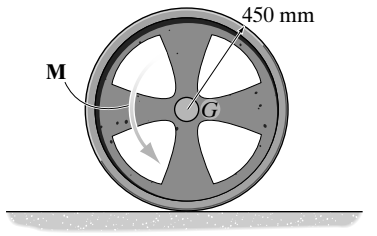

Equations of Motion: The mass moment of inertia of the wheel about its mass center is $I_G = mk_G{}^2 = 75\left(0.375^2\right) = 10.55\ \text{kg}\cdot\text{m}^2$. Writing the moment equation of motion about point A,

$$\circlearrowleft + \Sigma M_A = \Sigma(M_k)_A\,; \quad 100 = 75a_G(0.45) + 10.55\alpha \qquad \textbf{(1)}$$

Assuming that the wheel rolls without slipping.

$$a_G = \alpha r_G = \alpha(0.45) \qquad \textbf{(2)}$$

Solving Eqs. (1) and (2) yields:

$$\alpha = 3.886\ \text{rad/s}^2 = 3.89\ \text{rad/s}^2 \qquad \textbf{Ans.}$$

$$a_G = 1.749\ \text{m/s}^2$$

Writing the force equation of motion along the x and y axes,

$$+\uparrow \Sigma F_y = m(a_G)_y\,; \quad N - 75(9.81) = 0 \qquad N = 735.75\,\text{N}$$

$$\overset{+}{\leftarrow} \Sigma F_x = m(a_G)_x\,; \quad F_f = 75(1.749) = 131.15\text{N}$$

Since $F_f < \mu_k N = 0.2(735.75) = 147.15\,\text{N}$, the wheel does not slip as assumed.

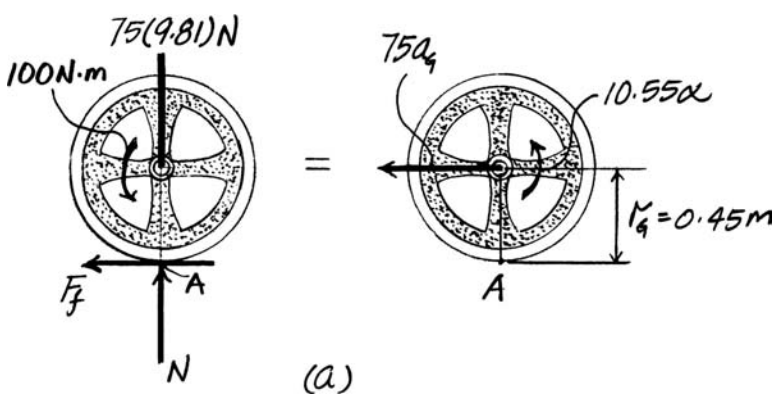

(a)

© 2010 Pearson Education, Inc., Upper Saddle River, NJ. All rights reserved. This material is protected under all copyright laws as they currently exist. No portion of this material may be reproduced, in any form or by any means, without permission in writing from the publisher.

17–122. The 75-kg wheel has a radius of gyration about its mass center of $k_G = 375$ mm. If it is subjected to a torque of $M = 150\ \text{N}\cdot\text{m}$, determine its angular acceleration. The coefficients of static and kinetic friction between the wheel and the ground are $\mu_s = 0.2$ and $\mu_k = 0.15$, respectively.

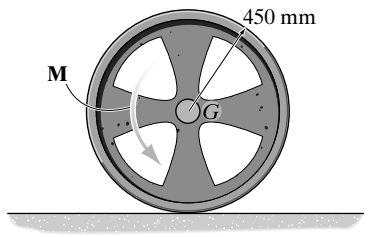

Equations of Motion: The mass moment of inertia of the wheel about its mass center is $I_G = mk_G{}^2 = 75\left(0.375^2\right) = 10.55\ \text{kg}\cdot\text{m}^2$. Writing the moment equation of motion about point A, we have

$$\circlearrowleft + \Sigma M_A = \Sigma(\mu_k)_A\,; \quad 150 = 75a_G(0.45) + 10.55\alpha \qquad \textbf{(1)}$$

Assuming that the wheel rolls without slipping,

$$a_G = \alpha r_G = \alpha(0.45) \qquad \textbf{(2)}$$

Solving Eqs. (1) and (2) yields

$$a_G = 2.623\ \text{m/s}^2$$

$$\alpha = 5.829\ \text{rad/s}^2$$

Writing the force equations of motion along the x and y axes,

$$+\uparrow \Sigma F_y = m(a_G)_y; \qquad N - 75(9.81) = 0 \qquad\qquad N = 735.75\,\text{N}$$

$$\overset{+}{\leftarrow} \Sigma F_x = m(a_G)_x\,; \qquad F_f = 75(2.623) = 196.72\ \text{N}$$

Since $F_f > \mu_k N = 0.2(735.75) = 147.15$ N, the wheel slips. The solution must be reworked using $F_f = \mu_k N = 0.15(735.75) = 110.36$ N. Thus,

$$\overset{+}{\leftarrow} \Sigma F_x = m(a_G)_x\,; \qquad 110.36 = 75a_G \qquad\qquad a_G = 1.4715\ \text{m/s}^2$$

Substituting this result into Eq. (1), we obtain

$$150 = 75(1.4715)(0.45) + 10.55\alpha$$

$$\alpha = 9.513\ \text{rad/s}^2 = 9.51\ \text{rad/s}^2 \qquad \textbf{Ans.}$$

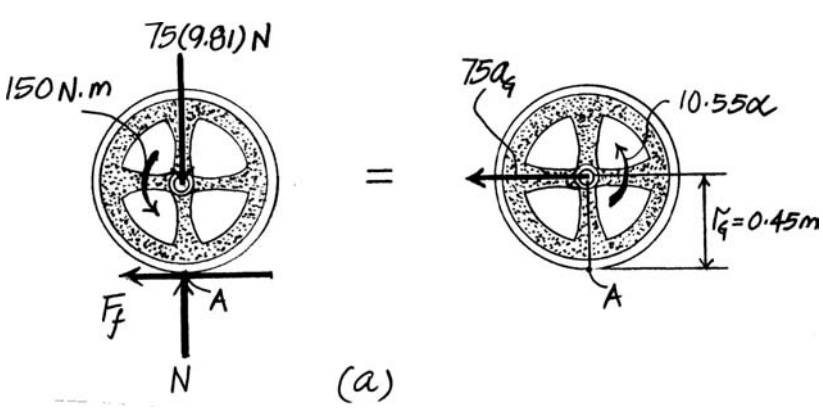

© 2010 Pearson Education, Inc., Upper Saddle River, NJ. All rights reserved. This material is protected under all copyright laws as they currently exist. No portion of this material may be reproduced, in any form or by any means, without permission in writing from the publisher.

17–123. The 500-kg concrete culvert has a mean radius of 0.5 m. If the truck has an acceleration of $3\,\text{m/s}^2$, determine the culvert's angular acceleration. Assume that the culvert does not slip on the truck bed, and neglect its thickness.

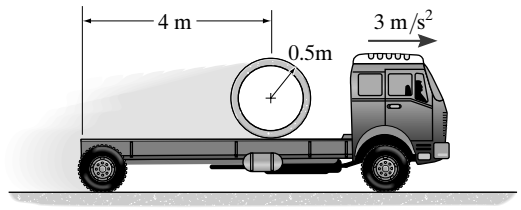

Equations of Motion: The mass moment of inertia of the culvert about its mass center is $I_G = mr^2 = 500\left(0.5^2\right) = 125\,\text{kg}\cdot\text{m}^2$. Writing the moment equation of motion about point A using Fig. a,

$$\circlearrowleft + \Sigma M_A = \Sigma (M_k)_A\,; \quad 0 = 125\alpha - 500 a_G(0.5) \qquad \textbf{(1)}$$

Kinematics: Since the culvert does not slip at A, $(a_A)_t = 3\,\text{m/s}^2$. Applying the relative acceleration equation and referring to Fig. b,

$$\mathbf{a}_G = \mathbf{a}_A + \alpha \times \mathbf{r}_{G/A} - \omega^2 r_{G/A}$$

$$a_G\mathbf{i} - 3\mathbf{i} + (a_A)_n\,\mathbf{j} + (\alpha\mathbf{k} \times 0.5\mathbf{j}) - \omega^2(0.5\mathbf{j})$$

$$a_G\mathbf{i} = (3 - 0.5\alpha)\mathbf{i} + \left[(a_A)_n - 0.5\omega^2\right]\mathbf{j}$$

Equating the **i** components,

$$a_G = 3 - 0.5\alpha \qquad \textbf{(2)}$$

Solving Eqs. (1) and (2) yields

$$a_G = 1.5\,\text{m/s}^2 \rightarrow$$

$$\alpha = 3\,\text{rad/s}^2 \qquad \textbf{Ans.}$$

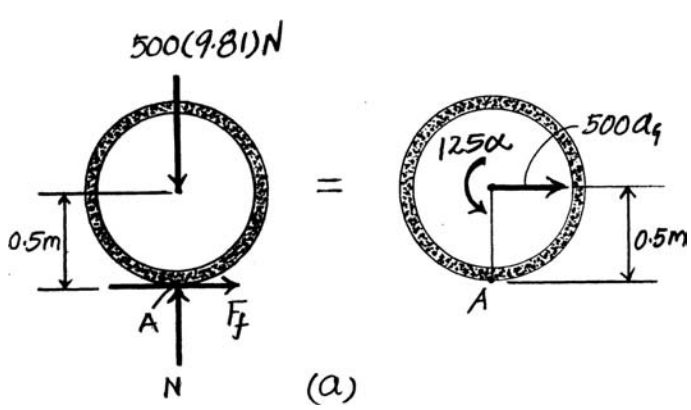

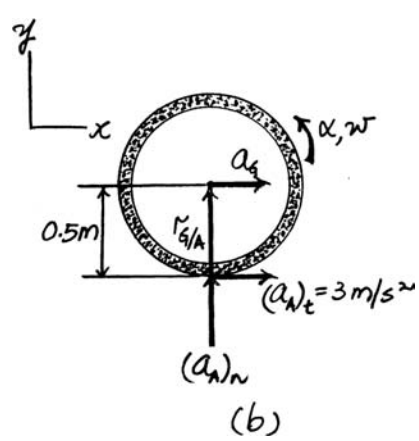

© 2010 Pearson Education, Inc., Upper Saddle River, NJ. All rights reserved. This material is protected under all copyright laws as they currently exist. No portion of this material may be reproduced, in any form or by any means, without permission in writing from the publisher.

•18–1. At a given instant the body of mass m has an angular velocity $\boldsymbol{\omega}$ and its mass center has a velocity $\mathbf{v}_G$. Show that its kinetic energy can be represented as $T = \frac{1}{2}I_{IC}\omega^2$, where I_{IC} is the moment of inertia of the body computed about the instantaneous axis of zero velocity, located a distance $r_{G/IC}$ from the mass center as shown.

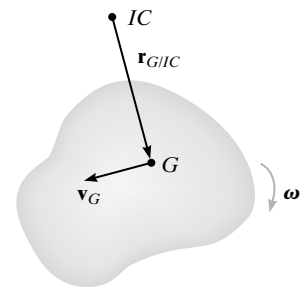

$$T = \frac{1}{2}mv_G^2 + \frac{1}{2}I_G\,\omega^2 \qquad \text{where } v_G = \omega r_{G/IC}$$

$$= \frac{1}{2}m(\omega r_{G/IC})^2 + \frac{1}{2}I_G\,\omega^2$$

$$= \frac{1}{2}\left(mr_{G/IC}^2 + I_G\right)\omega^2 \qquad \text{However } mr_{G/IC}^2 + I_G = I_{IC}$$

$$= \frac{1}{2}I_{IC}\,\omega^2 \qquad \textbf{Q.E.D.}$$

18–2. The double pulley consists of two parts that are attached to one another. It has a weight of 50 lb and a radius of gyration about its center of $k_O = 0.6$ ft. If it rotates with an angular velocity of 20 rad/s clockwise, determine the kinetic energy of the system. Assume that neither cable slips on the pulley.

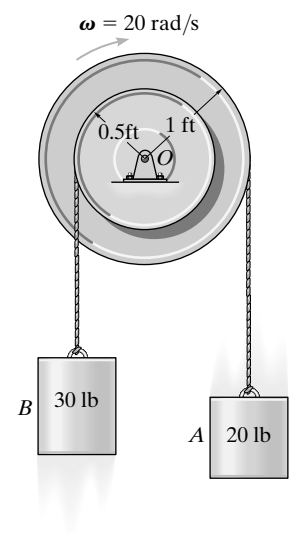

$$T = \frac{1}{2}I_O\,\omega_O^2 + \frac{1}{2}m_A\,v_A^2 + \frac{1}{2}m_B\,v_B^2$$

$$T = \frac{1}{2}\left(\frac{50}{32.2}(0.6)^2\right)(20)^2 + \frac{1}{2}\left(\frac{20}{32.2}\right)\left[(20)(1)\right]^2 + \frac{1}{2}\left(\frac{30}{32.2}\right)\left[(20)(0.5)\right]^2$$

$$= 283\ \text{ft}\cdot\text{lb} \qquad \textbf{Ans.}$$

© 2010 Pearson Education, Inc., Upper Saddle River, NJ. All rights reserved. This material is protected under all copyright laws as they currently exist. No portion of this material may be reproduced, in any form or by any means, without permission in writing from the publisher.

18–3. A force of $P = 20$ N is applied to the cable, which causes the 175-kg reel to turn without slipping on the two rollers A and B of the dispenser. Determine the angular velocity of the reel after it has rotated two revolutions starting from rest. Neglect the mass of the cable. Each roller can be considered as an 18-kg cylinder, having a radius of 0.1 m. The radius of gyration of the reel about its center axis is $k_G = 0.42$ m.

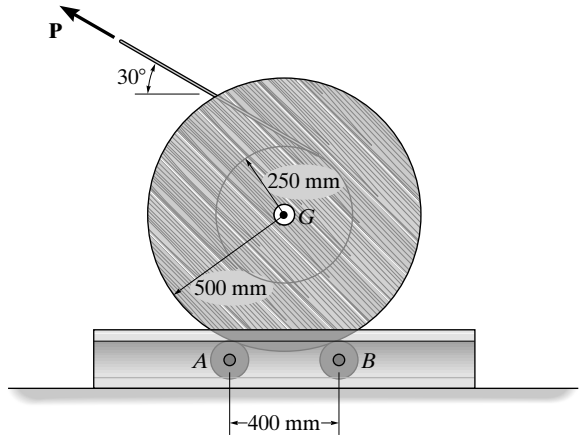

System:

$$T_1 + \Sigma U_{1-2} = T_2$$

$$[0 + 0 + 0] + 20(2)(2\pi)(0.250) = \frac{1}{2}\left[175(0.42^2)\right]\omega^2 + \frac{2}{2}\left[\frac{1}{2}(18)(0.1)^2\right]\omega_r^2$$

$$v = \omega_r\,(0.1) = \omega(0.5)$$

$$\omega_r = 5\omega$$

Solving:

$$\omega = 1.88 \text{ rad/s}$$ **Ans.**

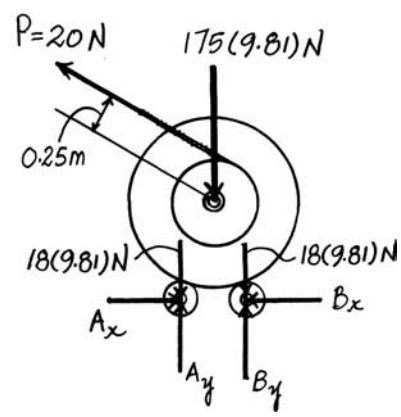

***18–4.** The spool of cable, originally at rest, has a mass of 200 kg and a radius of gyration of $k_G = 325$ mm. If the spool rests on two small rollers A and B and a constant horizontal force of $P = 400$ N is applied to the end of the cable, determine the angular velocity of the spool when 8 m of cable has been unwound. Neglect friction and the mass of the rollers and unwound cable.

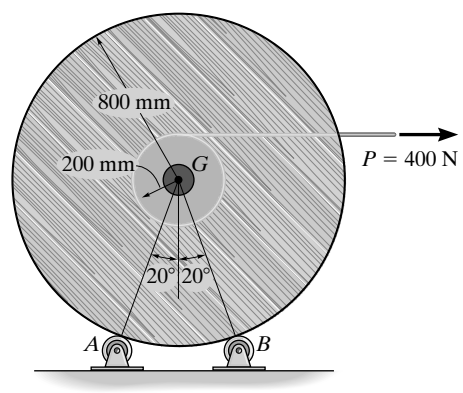

$$T_1 + \Sigma U_{1-2} = T_2$$

$$0 + (400)(8) = \frac{1}{2}\left[200(0.325)^2\right]\omega_2^2$$

$$\omega_2 = 17.4 \text{ rad/s}$$ **Ans.**

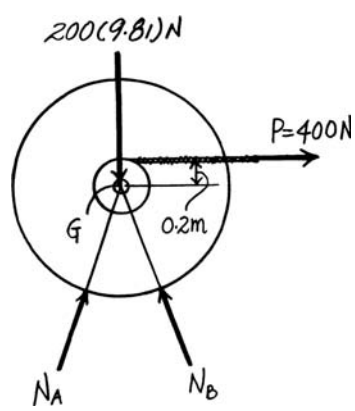

© 2010 Pearson Education, Inc., Upper Saddle River, NJ. All rights reserved. This material is protected under all copyright laws as they currently exist. No portion of this material may be reproduced, in any form or by any means, without permission in writing from the publisher.

•18–5. The pendulum of the Charpy impact machine has a mass of 50 kg and a radius of gyration of $k_A = 1.75$ m. If it is released from rest when $\theta = 0°$, determine its angular velocity just before it strikes the specimen S, $\theta = 90°$.

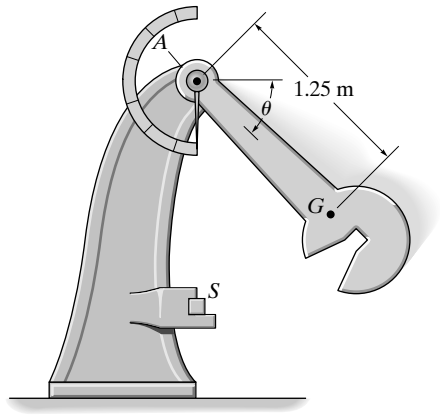

$$T_1 + \Sigma U_{1-2} = T_2$$

$$0 + (50)(9.81)(1.25) = \frac{1}{2}\left[(50)(1.75)^2\right]\omega_2^2$$

$$\omega_2 = 2.83 \text{ rad/s}$$ **Ans.**

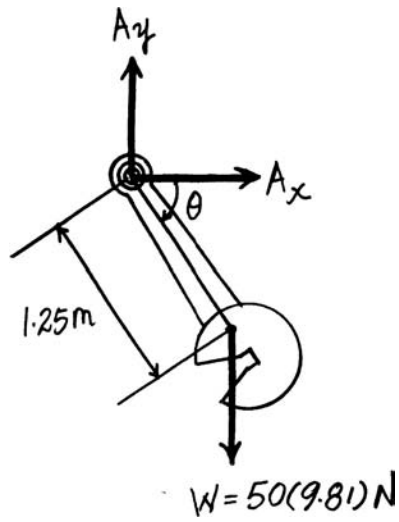

18–6. The two tugboats each exert a constant force **F** on the ship. These forces are always directed perpendicular to the ship's centerline. If the ship has a mass m and a radius of gyration about its center of mass G of k_G, determine the angular velocity of the ship after it turns 90°. The ship is originally at rest.

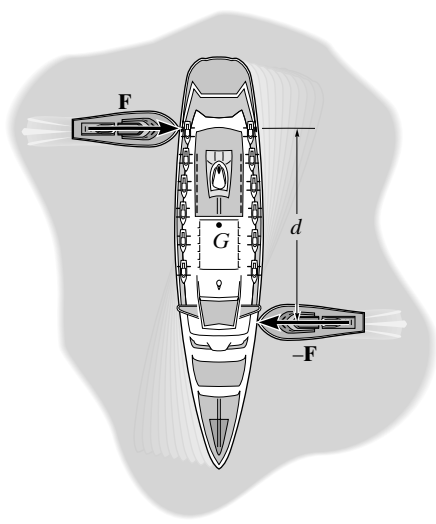

Principle of Work and Energy: The two tugboats create a couple moment of $M = Fd$ to rotate the ship through an angular displacement of $\theta = \frac{\pi}{2}$ rad. The mass moment of inertia about its mass center is $I_G = mk_G^2$. Applying Eq. 18–14, we have

$$T_1 + \sum U_{1-2} = T_2$$

$$0 + M\theta = \frac{1}{2} I_G \omega^2$$

$$0 + Fd\left(\frac{\pi}{2}\right) = \frac{1}{2}\left(mk_G^2\right)\omega^2$$

$$\omega = \frac{1}{k_G}\sqrt{\frac{\pi F d}{m}}$$ **Ans.**

© 2010 Pearson Education, Inc., Upper Saddle River, NJ. All rights reserved. This material is protected under all copyright laws as they currently exist. No portion of this material may be reproduced, in any form or by any means, without permission in writing from the publisher.

18–7. The drum has a mass of 50 kg and a radius of gyration about the pin at O of $k_O = 0.23$ m. Starting from rest, the suspended 15-kg block B is allowed to fall 3 m without applying the brake ACD. Determine the speed of the block at this instant. If the coefficient of kinetic friction at the brake pad C is $\mu_k = 0.5$, determine the force **P** that must be applied at the brake handle which will then stop the block after it descends *another* 3 m. Neglect the thickness of the handle.

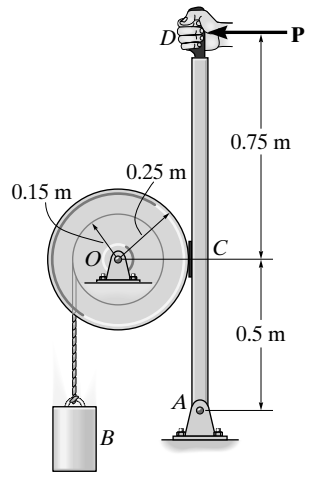

Before braking:

$$T_1 + \Sigma U_{1-2} = T_2$$

$$0 + 15(9.81)(3) = \frac{1}{2}(15)v_B^2 + \frac{1}{2}\left[50(0.23)^2\right]\left(\frac{v_B}{0.15}\right)^2$$

$$v_B = 2.58 \text{ m/s} \qquad \textbf{Ans.}$$

$$\frac{s_B}{0.15} = \frac{s_C}{0.25}$$

Set $s_B = 3$ m, then $s_C = 5$ m.

$$T_1 + \Sigma U_{1-2} = T_2$$

$$0 - F(5) + 15(9.81)(6) = 0$$

$$F = 176.6 \text{ N}$$

$$N = \frac{176.6}{0.5} = 353.2 \text{ N}$$

Brake arm:

$$\circlearrowleft + \Sigma M_A = 0; \qquad -353.2(0.5) + P(1.25) = 0$$

$$P = 141 \text{ N} \qquad \textbf{Ans.}$$

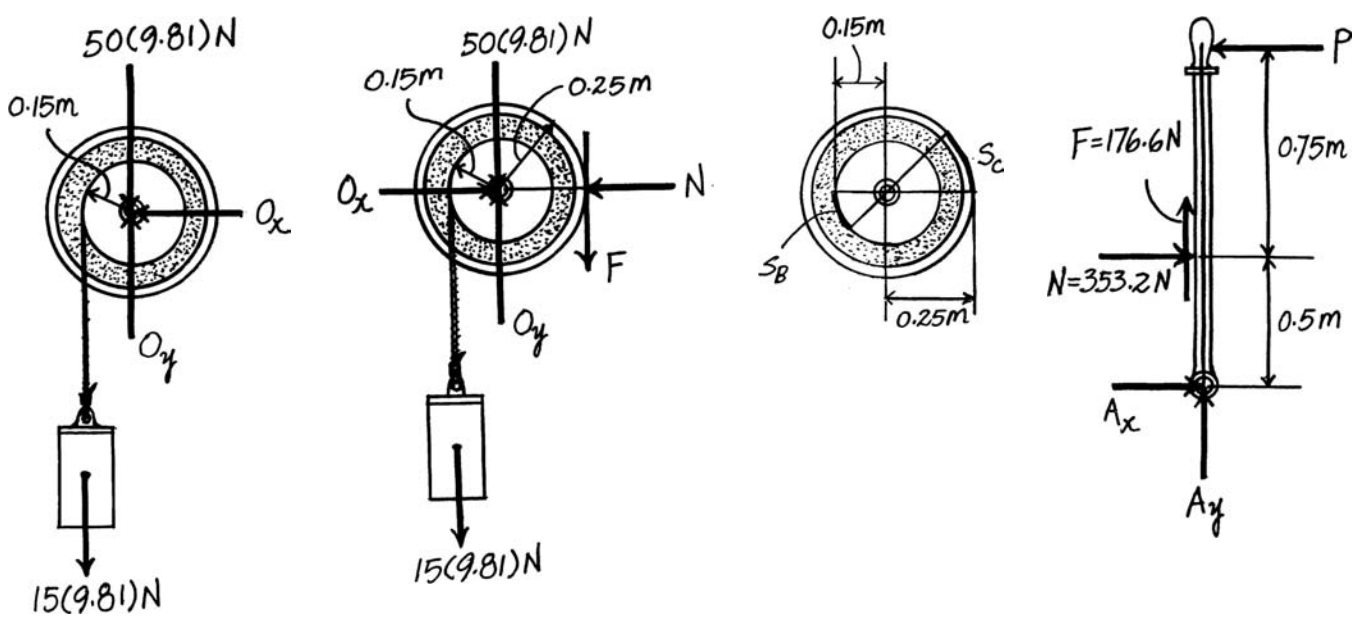

© 2010 Pearson Education, Inc., Upper Saddle River, NJ. All rights reserved. This material is protected under all copyright laws as they currently exist. No portion of this material may be reproduced, in any form or by any means, without permission in writing from the publisher.

***18–8.** The drum has a mass of 50 kg and a radius of gyration about the pin at O of $k_O = 0.23$ m. If the 15-kg block is moving downward at 3 m/s, and a force of $P = 100$ N is applied to the brake arm, determine how far the block descends from the instant the brake is applied until it stops. Neglect the thickness of the handle. The coefficient of kinetic friction at the brake pad is $\mu_k = 0.5$.

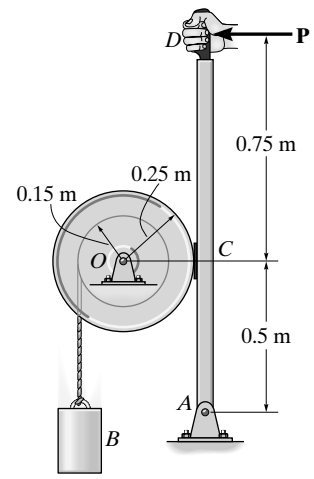

Brake arm:

$$\circlearrowleft + \Sigma M_A = 0; \qquad -N(0.5) + 100(1.25) = 0$$

$$N = 250 \text{ N}$$

$$F = 0.5(250) = 125 \text{ N}$$

If block descends s, then F acts through a distance $s' = s\left(\frac{0.25}{0.15}\right)$.

$$T_1 + \Sigma U_{1-2} = T_2$$

$$\frac{1}{2}\left[(50)(0.23)^2\right]\left(\frac{3}{0.15}\right)^2 + \frac{1}{2}(15)(3)^2 + 15(9.81)(s) - 125(s)\left(\frac{0.25}{0.15}\right) = 0$$

$$s = 9.75 \text{ m} \qquad \textbf{Ans.}$$

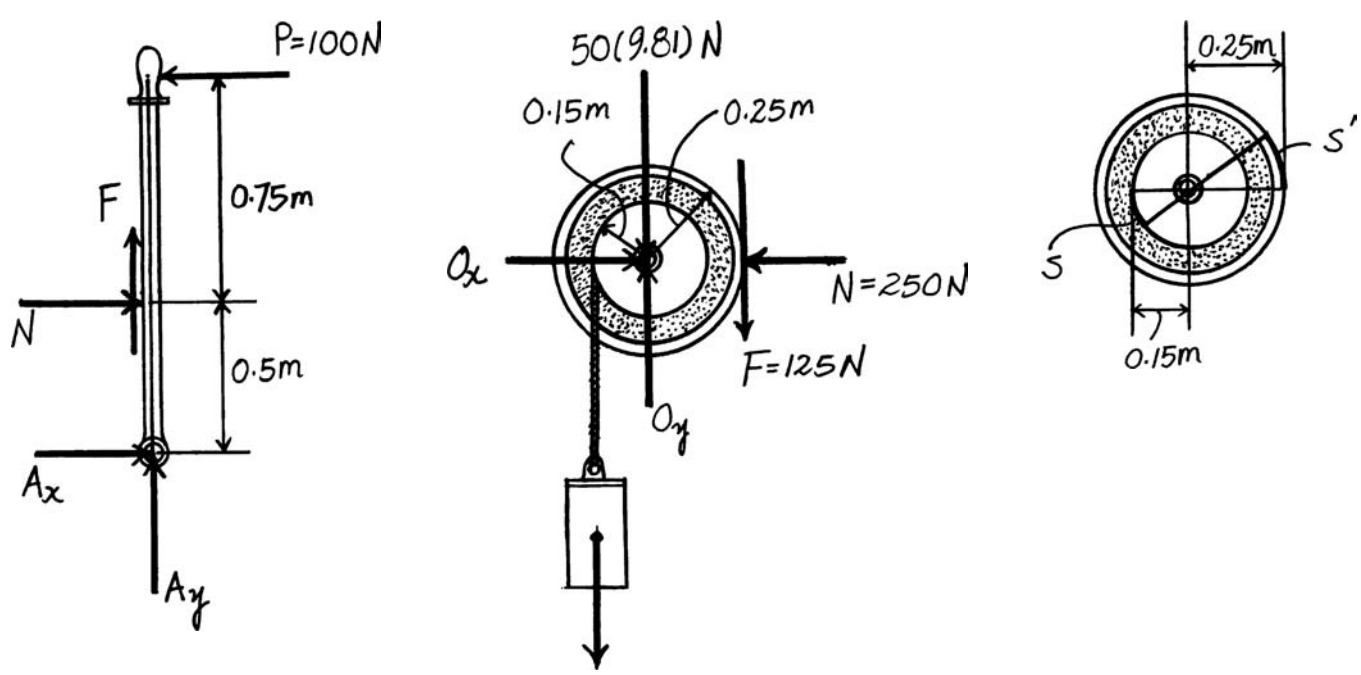

© 2010 Pearson Education, Inc., Upper Saddle River, NJ. All rights reserved. This material is protected under all copyright laws as they currently exist. No portion of this material may be reproduced, in any form or by any means, without permission in writing from the publisher.

•18–9. The spool has a weight of 150 lb and a radius of gyration $k_O = 2.25$ ft. If a cord is wrapped around its inner core and the end is pulled with a horizontal force of $P = 40$ lb, determine the angular velocity of the spool after the center O has moved 10 ft to the right. The spool starts from rest and does not slip at A as it rolls. Neglect the mass of the cord.

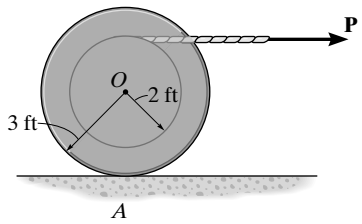

Kinematics: Since the spool rolls without slipping, the instantaneous center of zero velocity is located at point A. Thus,

$$v_O = \omega r_{O/IC} = \omega(3)$$

Also, using similar triangles

$$\frac{s_P}{5} = \frac{10}{3} \qquad s_P = 16.67 \text{ ft}$$

Free-Body Diagram: The 40 lb force does *positive* work since it acts in the same direction of its displacement s_P. The normal reaction N and the weight of the spool do no work since they do not displace. Also, since the spool does not slip, friction does no work.

Principle of Work and Energy: The mass moment of inertia of the spool about point O is $I_O = mk_O^2 = \left(\frac{150}{32.2}\right)\left(2.25^2\right) = 23.58 \text{ slug}\cdot\text{ft}^2$. Applying Eq. 18–14, we have

$$T_1 + \sum U_{1-2} = T_2$$

$$0 + P(s_P) = \frac{1}{2} m v_O^2 + \frac{1}{2} I_O \omega^2$$

$$0 + 40(16.67) = \frac{1}{2}\left(\frac{150}{32.2}\right)[\omega(3)]^2 + \frac{1}{2}(23.58)\,\omega^2$$

$$\omega = 4.51 \text{ rad/s} \qquad \textbf{Ans.}$$

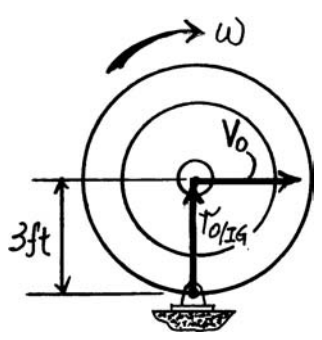

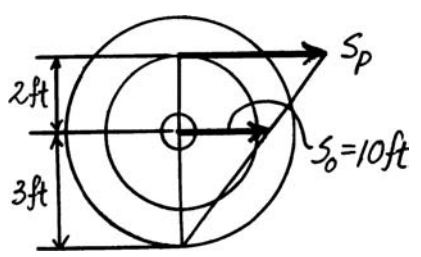

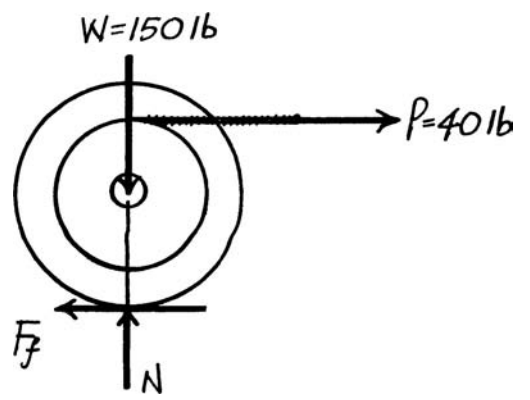

© 2010 Pearson Education, Inc., Upper Saddle River, NJ. All rights reserved. This material is protected under all copyright laws as they currently exist. No portion of this material may be reproduced, in any form or by any means, without permission in writing from the publisher.

18–10. A man having a weight of 180 lb sits in a chair of the Ferris wheel, which, excluding the man, has a weight of 15 000 lb and a radius of gyration $k_O = 37$ ft. If a torque $M = 80(10^3)$ lb·ft is applied about O, determine the angular velocity of the wheel after it has rotated 180°. Neglect the weight of the chairs and note that the man remains in an upright position as the wheel rotates. The wheel starts from rest in the position shown.

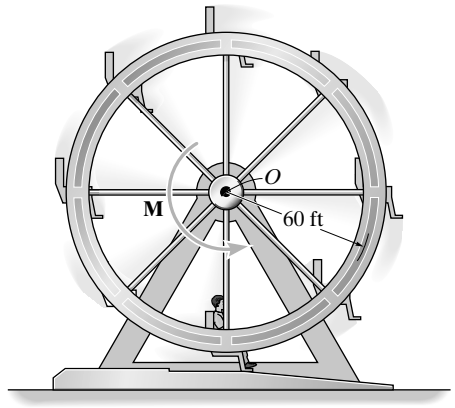

$$T_1 + \Sigma U_{1-2} = T_2$$

$$0 + 80\left(10^3\right)(\pi) - (180)(120) = \frac{1}{2}\left[\left(\frac{15\,000}{32.2}\right)(37)^2\right]\omega^2 + \frac{1}{2}\left(\frac{180}{32.2}\right)(60\omega)^2$$

$$\omega = 0.836 \text{ rad/s}$$ **Ans.**

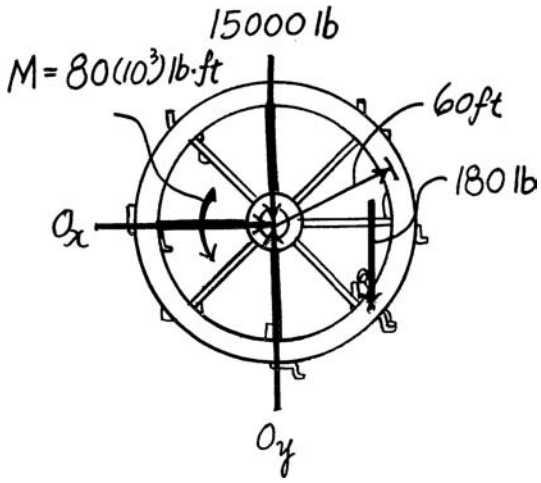

© 2010 Pearson Education, Inc., Upper Saddle River, NJ. All rights reserved. This material is protected under all copyright laws as they currently exist. No portion of this material may be reproduced, in any form or by any means, without permission in writing from the publisher.

18–11. A man having a weight of 150 lb crouches down on the end of a diving board as shown. In this position the radius of gyration about his center of gravity is $k_G = 1.2$ ft. While holding this position at $\theta = 0°$, he rotates about his toes at A until he loses contact with the board when $\theta = 90°$. If he remains rigid, determine approximately how many revolutions he makes before striking the water after falling 30 ft.

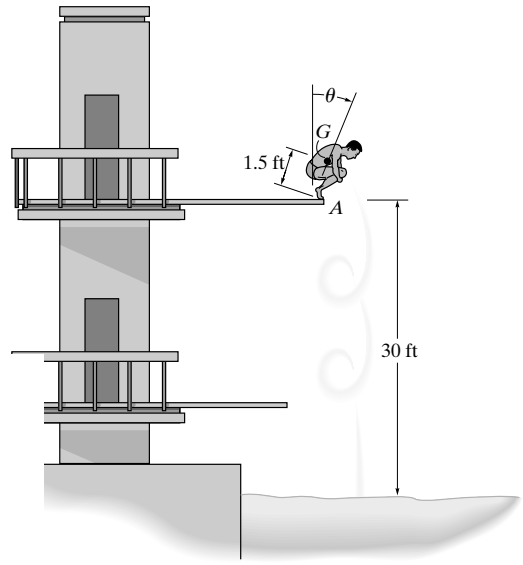

$$T_1 + \Sigma U_{1-2} = T_2$$

$$0 + 150(1.5) = \frac{1}{2}\left(\frac{150}{32.2}\right)(1.5\omega)^2 + \frac{1}{2}\left[\left(\frac{150}{32.2}\right)(1.2)^2\right]\omega^2$$

$$\omega = 5.117 \text{ rad/s}$$

$$v_G = (1.5)(5.117) = 7.675 \text{ ft/s}$$

During the fall no forces act on the man to cause an angular acceleration, so $\alpha = 0$.

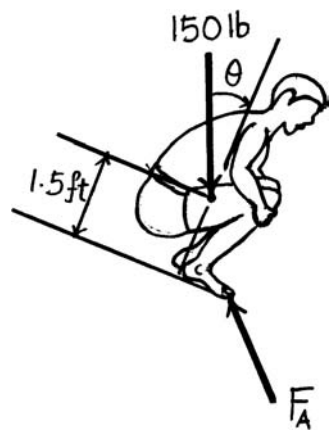

$(+\downarrow)$ $\quad s = s_0 + v_0 t + \frac{1}{2} a_c t^2$

$$30 = 0 + 7.675t + \frac{1}{2}(32.2)t^2$$

Choosing the positive root,

$$t = 1.147 \text{ s}$$

$(\circlearrowright +)$ $\quad \theta = \theta_0 + \omega_0 t + \frac{1}{2}\alpha_c t^2$

$$\theta = 0 + 5.117(1.147) + 0$$

$$\theta = 5.870 \text{ rad} = 0.934 \text{ rev.} \qquad \textbf{Ans.}$$

© 2010 Pearson Education, Inc., Upper Saddle River, NJ. All rights reserved. This material is protected under all copyright laws as they currently exist. No portion of this material may be reproduced, in any form or by any means, without permission in writing from the publisher.

***18–12.** The spool has a mass of 60 kg and a radius of gyration $k_G = 0.3$ m. If it is released from rest, determine how far its center descends down the smooth plane before it attains an angular velocity of $\omega = 6$ rad/s. Neglect friction and the mass of the cord which is wound around the central core.

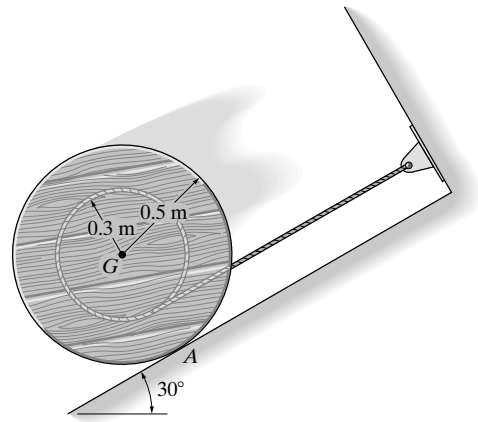

$$T_1 + \Sigma U_{1-2} = T_2$$

$$0 + 60(9.81)\sin 30°(s) = \frac{1}{2}\left[60(0.3)^2\right](6)^2 + \frac{1}{2}(60)\left[0.3(6)\right]^2$$

$$s = 0.661 \text{ m}$$ **Ans.**

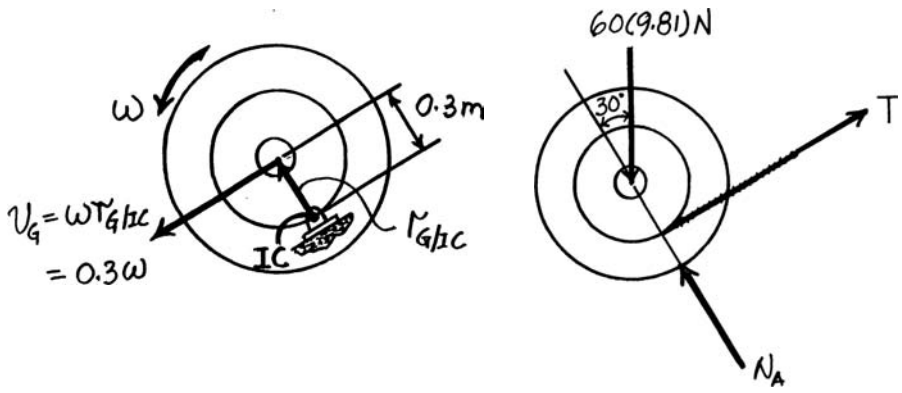

•18–13. Solve Prob. 18–12 if the coefficient of kinetic friction between the spool and plane at A is $\mu_k = 0.2$.

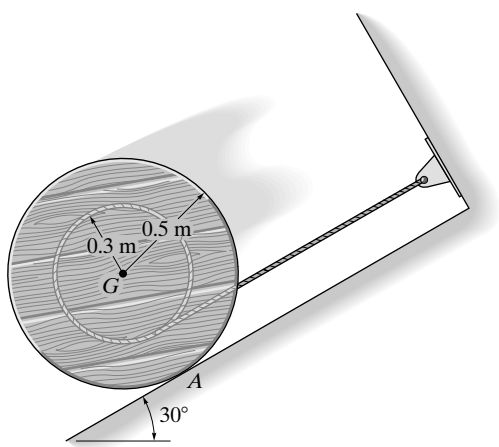

$$\frac{s_G}{0.3} = \frac{s_A}{(0.5 - 0.3)}$$

$$s_A = 0.6667 s_G$$

$$+\nwarrow \Sigma F_y = 0; \qquad N_A - 60(9.81)\cos 30° = 0$$

$$N_A = 509.7 \text{ N}$$

$$T_1 + \Sigma U_{1-2} = T_2$$

$$0 + 60(9.81)\sin 30°(s_G) - 0.2(509.7)(0.6667 s_G) = \frac{1}{2}\left[60(0.3)^2\right](6)^2$$

$$+ \frac{1}{2}(60)\left[(0.3)(6)\right]^2$$

$$s_G = 0.859 \text{ m}$$ **Ans.**

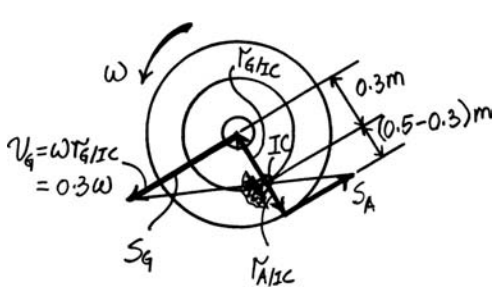

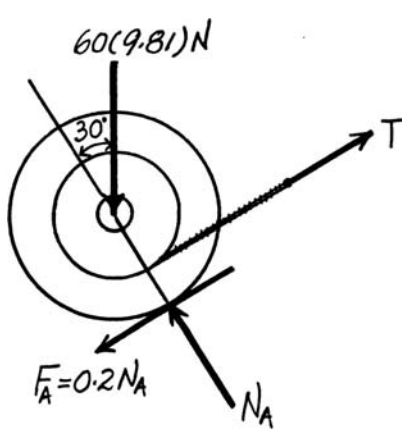

© 2010 Pearson Education, Inc., Upper Saddle River, NJ. All rights reserved. This material is protected under all copyright laws as they currently exist. No portion of this material may be reproduced, in any form or by any means, without permission in writing from the publisher.

18–14. The spool has a weight of 500 lb and a radius of gyration of $k_G = 1.75$ ft. A horizontal force of $P = 15$ lb is applied to the cable wrapped around its inner core. If the spool is originally at rest, determine its angular velocity after the mass center G has moved 6 ft to the left. The spool rolls without slipping. Neglect the mass of the cable.

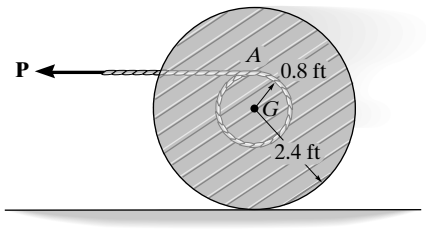

$$\frac{s_G}{2.4} = \frac{s_A}{3.2}$$

For $s_G = 6$ ft, then $s_A = 8$ ft.

$$T_1 + \Sigma U_{1-2} = T_2$$

$$0 + 15(8) = \frac{1}{2}\left[\left(\frac{500}{32.2}\right)(1.75)^2\right]\omega^2 + \frac{1}{2}\left(\frac{500}{32.2}\right)(2.4\omega)^2$$

$$\omega = 1.32 \text{ rad/s} \qquad \textbf{Ans.}$$

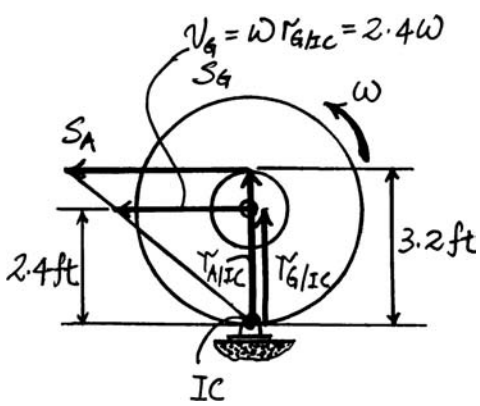

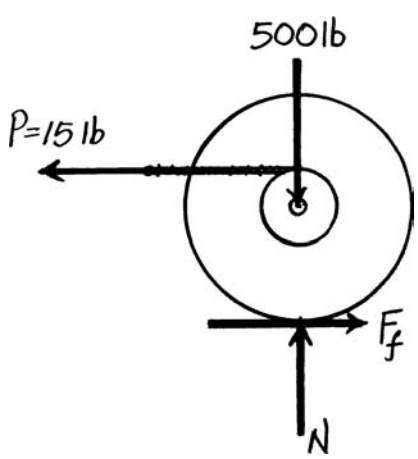

© 2010 Pearson Education, Inc., Upper Saddle River, NJ. All rights reserved. This material is protected under all copyright laws as they currently exist. No portion of this material may be reproduced, in any form or by any means, without permission in writing from the publisher.

18–15. If the system is released from rest, determine the speed of the 20-kg cylinders A and B after A has moved downward a distance of 2 m. The differential pulley has a mass of 15 kg with a radius of gyration about its center of mass of $k_O = 100$ mm.

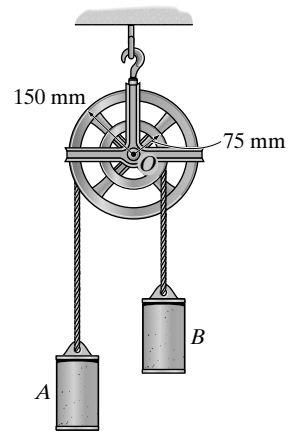

Kinetic Energy and Work: The kinetic energy of the pulley and cylinders A and B is

$$T_P = \frac{1}{2} I_O \omega^2 = \frac{1}{2}\left[15\left(0.1^2\right)\right]\omega^2 = 0.075\omega^2$$

$$T_A = \frac{1}{2} m_A v_A{}^2 = \frac{1}{2}(20)v_A{}^2 = 10v_A{}^2$$

$$T_B = \frac{1}{2} m_B v_B{}^2 = \frac{1}{2}(20)v_B{}^2 = 10v_B{}^2$$

Thus, the kinetic energy of the system is

$$T = T_P + T_A + T_B$$

$$T = 0.075\omega^2 + 10v_A{}^2 + 10v_B{}^2 \qquad \textbf{(1)}$$

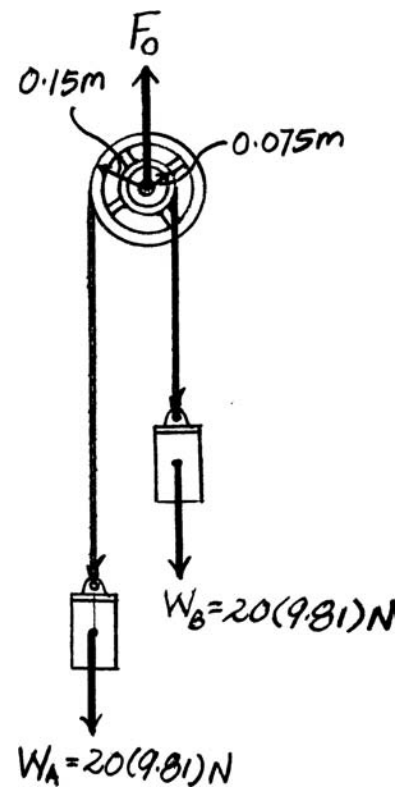

However, since the pulley rotates about a fixed axis,

$$\omega = \frac{v_A}{r_A} = \frac{v_A}{0.15} = 6.667v_A$$

then

$$v_B = \omega r_B = 6.667v_A(0.075) = 0.5v_A$$

Substituting these results into Eq. (1), we obtain

$$T = 15.833v_A{}^2$$

Since the system is initially at rest,

$$T_1 = 0$$

Referring to Fig. a, $\mathbf{F}_O$ does no work, while W_A does positive work, and W_B does negative work. Thus,

$$U_A = W_A s_A \qquad\qquad U_B = -W_B s_B$$

Here, $s_A = 2$ m. Thus, the pulley rotates through an angle of $\theta = \frac{s_A}{r_A} = \frac{2}{0.15} = 13.33$ rad. Then, $s_B = r_B\theta = 0.075(13.33) = 1$ m. Thus,

$$U_A = 20(9.81)(2) = 392.4 \text{ J}$$

$$U_B = -20(9.81)(1) = -196.2 \text{ J}$$

Principle of Work and Energy:

$$T_1 + \Sigma U_{1-2} = T_2$$

$$0 + \left[392.4 + (-196.2)\right] = 15.833v_A{}^2$$

$$v_A = 3.520 \text{ m/s} = 3.52 \text{ m/s}\downarrow \qquad \textbf{Ans.}$$

Then

$$v_B = 0.5(3.520) = 1.76 \text{ m/s}\uparrow \qquad \textbf{Ans.}$$

© 2010 Pearson Education, Inc., Upper Saddle River, NJ. All rights reserved. This material is protected under all copyright laws as they currently exist. No portion of this material may be reproduced, in any form or by any means, without permission in writing from the publisher.

***18–16.** If the motor M exerts a constant force of $P = 300$ N on the cable wrapped around the reel's outer rim, determine the velocity of the 50-kg cylinder after it has traveled a distance of 2 m. Initially, the system is at rest. The reel has a mass of 25 kg, and the radius of gyration about its center of mass A is $k_A = 125$ mm.

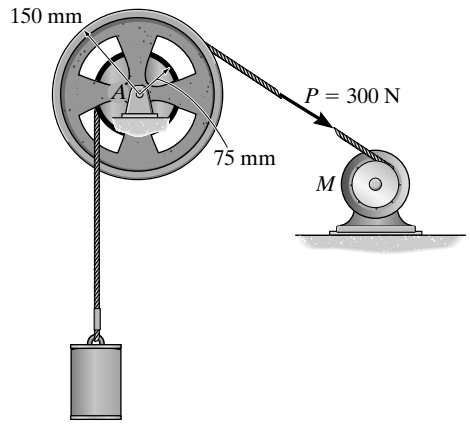

Kinetic Energy and Work: Since the reel rotates about a fixed axis, $v_C = \omega_r r_C$ or $\omega_r = \dfrac{v_C}{r_C} = \dfrac{v_C}{0.075} = 13.33 v_C$. The mass moment of inertia of the reel about its mass centers is $I_A = m_r k_A{}^2 = 25\left(0.125^2\right) = 0.390625 \text{ kg}\cdot\text{m}^2$. Thus, the kinetic energy of the system is

$$T = T_r + T_C$$

$$= \frac{1}{2} I_A \omega_r{}^2 + \frac{1}{2} m_C v_C{}^2$$

$$= \frac{1}{2}(0.390625)(13.33 v_C)^2 + \frac{1}{2}(50) v_C{}^2$$

$$= 59.72 v_C{}^2$$

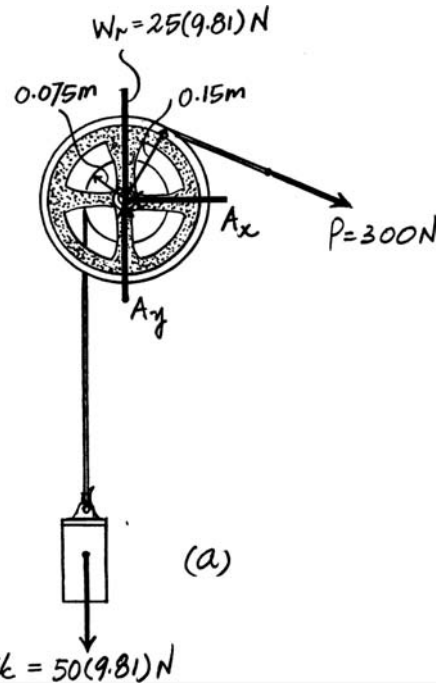

Since the system is initially at rest, $T_1 = 0$. Referring to Fig. a, $\mathbf{A}_y$, $\mathbf{A}_x$, and $\mathbf{W}_r$ do no work, while $\mathbf{P}$ does positive work, and $\mathbf{W}_C$ does negative work. When the cylinder displaces upwards through a distance of $s_C = 2$ m, the wheel rotates $\theta = \dfrac{s_C}{r_C} = \dfrac{2}{0.075} = 26.67$ rad. Thus, $\mathbf{P}$ displaces a distance of $s_P = r_P\theta = 0.15(26.67) = 4$ m. The work done by $\mathbf{P}$ and $\mathbf{W}_C$ is therefore

$$U_P = P s_P = 300(4) = 1200 \text{ J}$$

$$U_{W_C} = -W_C s_C = -50(9.81)(2) = -981 \text{ J}$$

Principle of Work and Energy:

$$T_1 + \Sigma U_{1-2} = T_2$$

$$0 + \left[1200 + (-981)\right] = 59.72 v_C{}^2$$

$$v_C = 1.91 \text{ m/s}\uparrow \qquad \textbf{Ans.}$$

© 2010 Pearson Education, Inc., Upper Saddle River, NJ. All rights reserved. This material is protected under all copyright laws as they currently exist. No portion of this material may be reproduced, in any form or by any means, without permission in writing from the publisher.

•18–17. The 6-kg lid on the box is held in equilibrium by the torsional spring at $\theta = 60°$. If the lid is forced closed, $\theta = 0°$, and then released, determine its angular velocity at the instant it opens to $\theta = 45°$.

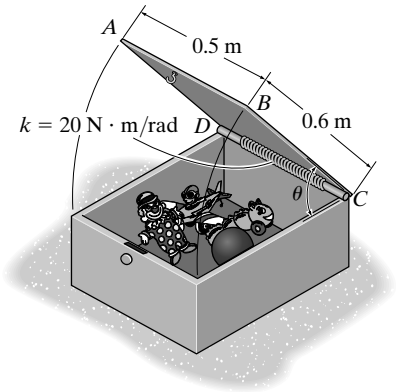

Equilibrium: Here, $M = k\theta_0 = 20\theta_0$, where θ_0 is the initial angle of twist for the torsional spring. Referring to Fig. *a*, we have

$$+\Sigma M_C = 0; \qquad 6(9.81)\cos 60°(0.3) - 20\theta_0 = 0 \qquad \theta_0 = 0.44145 \text{ rad}$$

Kinetic Energy and Work: Since the cover rotates about a fixed axis passing through point C, the kinetic energy of the cover can be obtained by applying $T = \frac{1}{2} I_C \omega^2$, where $I_C = \frac{1}{3} mb^2 = \frac{1}{3}(6)\left(0.6^2\right) = 0.72 \text{ kg} \cdot \text{m}^2$. Thus,

$$T = \frac{1}{2} I_C \omega^2 = \frac{1}{2}(0.72)\omega^2 = 0.36\omega^2$$

Since the cover is initially at rest ($\theta = 0°$), $T_1 = 0$. Referring to Fig. *b*, C_x and C_y do no work. **M** does positive work, and W does negative work. When $\theta = 0°$ and 45°, the angles of twist for the torsional spring are $\theta_1 = 1.489$ rad and $\theta_2 = 1.489 - \frac{\pi}{4} = 0.703$ rad, respectively. Also, when $\theta = 45°$, **W** displaces vertically upward through a distance of $h = 0.3 \sin 45° = 0.2121$ m. Thus, the work done by **M** and **W** are

$$U_M = \int M\, d\theta = \int_{\theta_2}^{\theta_1} 20\theta\, d\theta = 10\theta^2 \Big|_{0.7032 \text{ rad}}^{1.4886 \text{ rad}} = 17.22 \text{ J}$$

$$U_W = -Wh = -6(9.81)(0.2121) = -12.49 \text{ J}$$

Principle of Work and Energy:

$$T_1 + \Sigma U_{1-2} = T_2$$

$$0 + \left[17.22 + (-12.49)\right] = 0.36\omega^2$$

$$\omega = 3.62 \text{ rad/s} \qquad \textbf{Ans.}$$

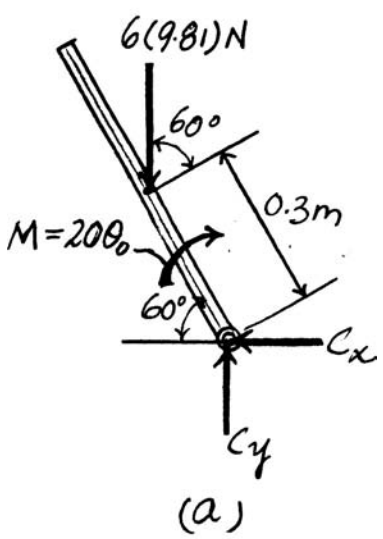

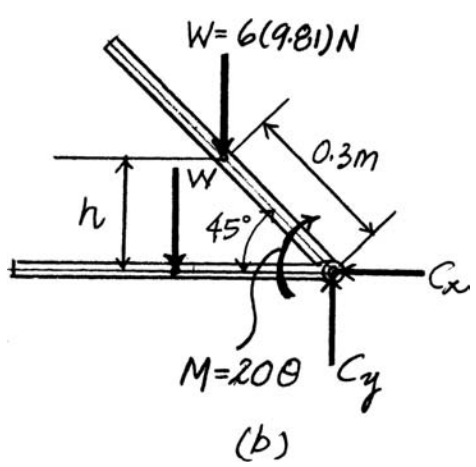

© 2010 Pearson Education, Inc., Upper Saddle River, NJ. All rights reserved. This material is protected under all copyright laws as they currently exist. No portion of this material may be reproduced, in any form or by any means, without permission in writing from the publisher.

18–18. The wheel and the attached reel have a combined weight of 50 lb and a radius of gyration about their center of $k_A = 6$ in. If pulley B attached to the motor is subjected to a torque of $M = 40(2 - e^{-0.1\theta})$ lb · ft, where θ is in radians, determine the velocity of the 200-lb crate after it has moved upwards a distance of 5 ft, starting from rest. Neglect the mass of pulley B.

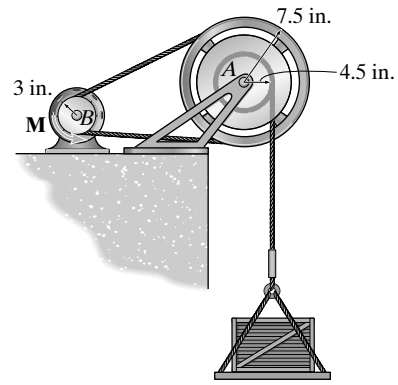

Kinetic Energy and Work: Since the wheel rotates about a fixed axis, $v_C = \omega r_C = \omega(0.375)$. The mass moment of inertia of A about its mass center is $I_A = mk_A{}^2 = \left(\frac{50}{32.2}\right)\left(0.5^2\right) = 0.3882$ slug · ft^2. Thus, the kinetic energy of the system is

$$T = T_A + T_C$$

$$= \frac{1}{2} I_A \omega^2 + \frac{1}{2} m_C v_C{}^2$$

$$= \frac{1}{2}(0.3882)\omega^2 + \frac{1}{2}\left(\frac{200}{32.2}\right)\left[\omega(0.375)\right]^2$$

$$= 0.6308\omega^2$$

Since the system is initially at rest, $T_1 = 0$. Referring to Fig. b, $\mathbf{A}_x$, $\mathbf{A}_y$, and $\mathbf{W}_A$ do no work, $\mathbf{M}$ does positive work, and $\mathbf{W}_C$ does negative work. When crate C moves 5 ft upward, wheel A rotates through an angle of $\theta_A = \frac{s_C}{r} = \frac{5}{0.375} = 13.333$ rad. Then, pulley B rotates through an angle of $\theta_B = \frac{r_A}{r_B}\theta_A = \left(\frac{0.625}{0.25}\right)(13.333) = 33.33$ rad. Thus, the work done by $\mathbf{M}$ and $\mathbf{W}_C$ is

$$U_M = \int M d\theta_B = \int_0^{33.33\text{ rad}} 40\left(2 - e^{-0.1\theta}\right) d\theta$$

$$= \left[40\left(2\theta + 10e^{-0.1\theta}\right)\right]\Big|_0^{33.33\text{ rad}}$$

$$= 2280.93 \text{ ft} \cdot \text{lb}$$

$$U_{W_C} = -W_C s_C = -200(5) = -1000 \text{ ft} \cdot \text{lb}$$

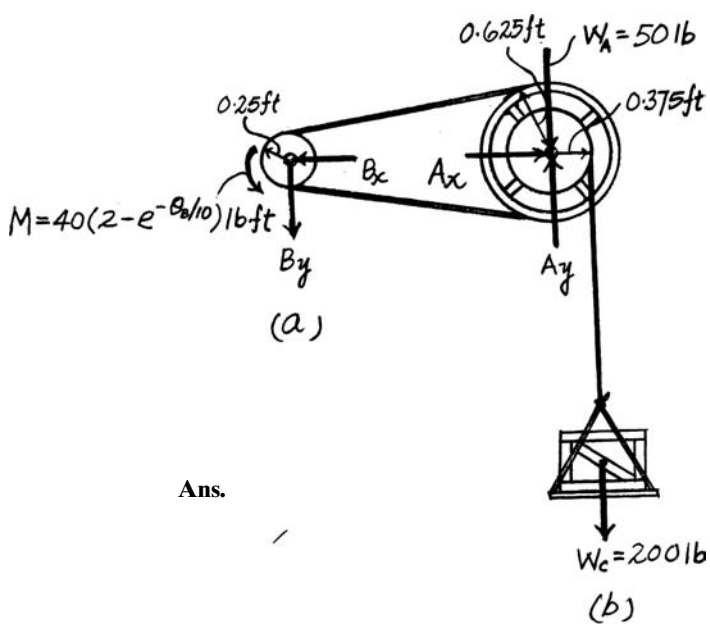

Principle of Work and Energy:

$$T_1 + \Sigma U_{1-2} = T_2$$

$$0 + [2280.93 - 1000] = 0.6308\omega^2$$

$$\omega = 45.06 \text{ rad/s}$$

Thus,

$$v_C = 45.06(0.375) = 16.9 \text{ ft/s} \uparrow$$ **Ans.**

© 2010 Pearson Education, Inc., Upper Saddle River, NJ. All rights reserved. This material is protected under all copyright laws as they currently exist. No portion of this material may be reproduced, in any form or by any means, without permission in writing from the publisher.

18–19. The wheel and the attached reel have a combined weight of 50 lb and a radius of gyration about their center of $k_A = 6$ in. If pulley B that is attached to the motor is subjected to a torque of $M = 50\ \text{lb}\cdot\text{ft}$, determine the velocity of the 200-lb crate after the pulley has turned 5 revolutions. Neglect the mass of the pulley.

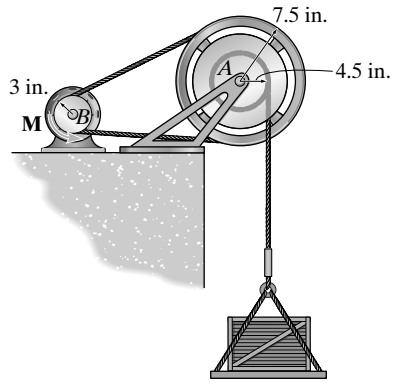

Kinetic Energy and Work: Since the wheel at A rotates about a fixed axis, $v_C = \omega r_C = \omega(0.375)$. The mass moment of inertia of wheel A about its mass center is $I_A = mk_A{}^2 = \left(\frac{50}{32.2}\right)\left(0.5^2\right) = 0.3882\ \text{slug}\cdot\text{ft}^2$. Thus, the kinetic energy of the system is

$$
\begin{aligned}
T &= T_A + T_C \\
&= \frac{1}{2} I_A \omega^2 + \frac{1}{2} m_C v_C{}^2 \\
&= \frac{1}{2}(0.3882)\omega^2 + \frac{1}{2}\left(\frac{200}{32.2}\right)\left[\omega(0.375)\right]^2 \\
&= 0.6308\omega^2
\end{aligned}
$$

Since the system is initially at rest, $T_1 = 0$. Referring to Fig. b, $\mathbf{A}_x$, $\mathbf{A}_y$, and $\mathbf{W}_A$ do no work, $\mathbf{M}$ does positive work, and $\mathbf{W}_C$ does negative work. When pulley B rotates $\theta_B = (5\ \text{rev})\left(\frac{2\pi\ \text{rad}}{1\ \text{rev}}\right) = 10\pi$ rad, the wheel rotates through an angle of $\theta_A = \frac{r_B}{r_A}\theta_B = \left(\frac{0.25}{0.625}\right)(10\pi) = 4\pi$. Thus, the crate displaces upwards through a distance of $s_C = r_C\,\theta_A = 0.375(4\pi) = 1.5\pi$ ft. Thus, the work done by $\mathbf{M}$ and $\mathbf{W}_C$ is

$$U_M = M\theta_B = 50(10\pi) = 500\pi\ \text{ft}\cdot\text{lb}$$

$$U_{W_C} = -W_C\,s_C = -200(1.5\pi) = -300\pi\ \text{ft}\cdot\text{lb}$$

Principle of Work and Energy:

$$T_1 + \Sigma U_{1-2} = T_2$$

$$0 + [500\pi - 300\pi] = 0.6308\omega^2$$

$$\omega = 31.56\ \text{rad/s}$$

Thus,

$$v_C = 31.56(0.375) = 11.8\ \text{ft/s}\uparrow$$

Ans.

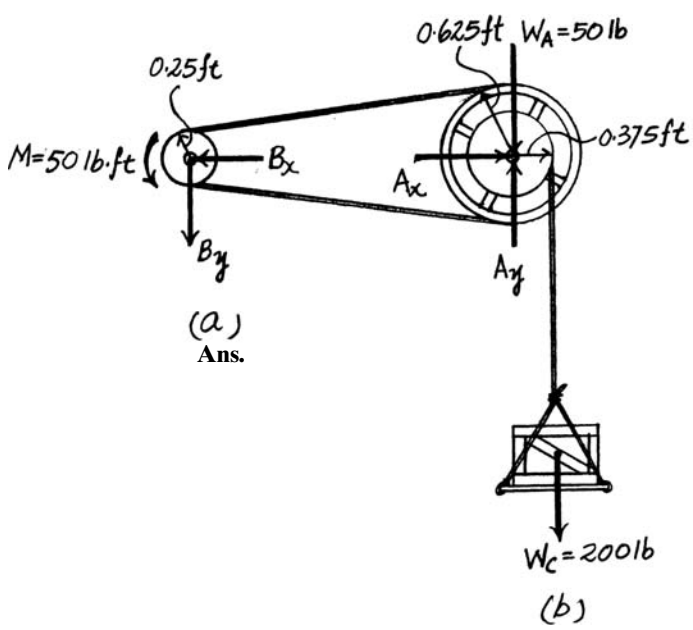

© 2010 Pearson Education, Inc., Upper Saddle River, NJ. All rights reserved. This material is protected under all copyright laws as they currently exist. No portion of this material may be reproduced, in any form or by any means, without permission in writing from the publisher.

***18–20.** The 30-lb ladder is placed against the wall at an angle of $\theta = 45°$ as shown. If it is released from rest, determine its angular velocity at the instant just before $\theta = 0°$. Neglect friction and assume the ladder is a uniform slender rod.

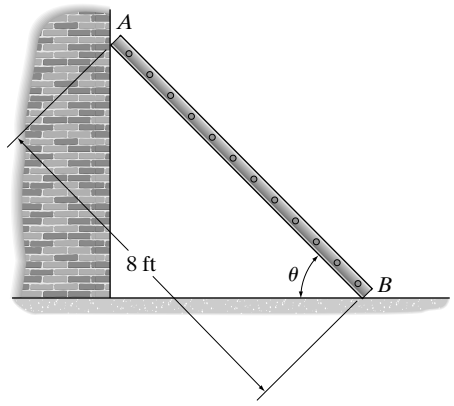

Kinetic Energy and Work: Referring to Fig. *a*,

$$(v_G)_2 = \omega_2 r_{G/IC} = \omega_2(4)$$

The mass moment of inertia of the ladder about its mass center is $I_G = \frac{1}{12}ml^2 = \frac{1}{12}\left(\frac{30}{32.2}\right)(8^2) = 4.969 \text{ slug}\cdot\text{ft}^2$. Thus, the final kinetic energy is

$$T_2 = \frac{1}{2}m(v_G)_2{}^2 + \frac{1}{2}I_G\omega_2{}^2$$

$$= \frac{1}{2}\left(\frac{30}{32.2}\right)\left[\omega_2(4)\right]^2 + \frac{1}{2}(4.969)\omega_2{}^2$$

$$= 9.938\omega_2{}^2$$

Since the ladder is initially at rest, $T_1 = 0$. Referring to Fig. *b*, $\mathbf{N}_A$ and $\mathbf{N}_B$ do no work, while $\mathbf{W}$ does positive work. When $\theta = 0°$, $\mathbf{W}$ displaces vertically through a distance of $h = 4 \sin 45° \text{ ft} = 2.828 \text{ ft}$. Thus, the work done by $\mathbf{W}$ is

$$U_W = Wh = 30(2.828) = 84.85 \text{ ft}\cdot\text{lb}$$

Principle of Work and Energy:

$$T_1 + \Sigma U_{1-2} = T_2$$

$$0 + 84.85 = 9.938\omega_2{}^2$$

$$\omega_2 = 2.92 \text{ rad/s}$$ **Ans.**

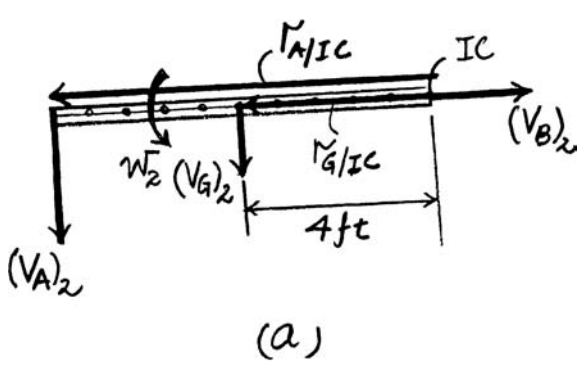

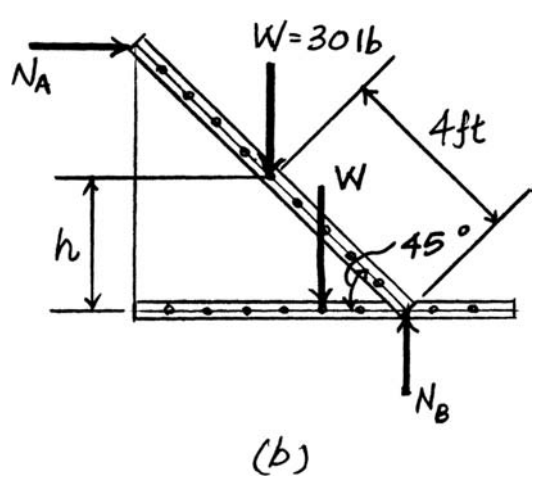

© 2010 Pearson Education, Inc., Upper Saddle River, NJ. All rights reserved. This material is protected under all copyright laws as they currently exist. No portion of this material may be reproduced, in any form or by any means, without permission in writing from the publisher.

•18–21. Determine the angular velocity of the two 10-kg rods when $\theta = 180°$ if they are released from rest in the position $\theta = 60°$. Neglect friction.

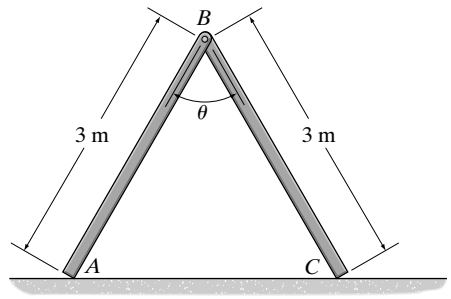

Kinetic Energy and Work: Due to symmetry, the velocity of point B is directed along the vertical, as shown in Fig. a. Also, $(\omega_{AB})_2 = (\omega_{BC})_2 = \omega_2$ and $\left(v_{G_{AB}}\right)_2 = \left(v_{G_{BC}}\right)_2 = (v_G)_2$. Here, $(v_G)_2 = \omega_2 r_{G/IC} = \omega_2(1.5)$. The mass moment of inertia of the rods about their respective mass centers is $I_G = \frac{1}{12}ml^2 = \frac{1}{12}(10)\left(3^2\right) = 7.5\ \text{kg}\cdot\text{m}^2$. Thus, the final kinetic energy is

$$T_2 = (T_{AB})_2 + (T_{BC})_2$$

$$= 2\left[\frac{1}{2}m(v_G)_2{}^2 + \frac{1}{2}I_G\omega_2{}^2\right]$$

$$= 2\left[\frac{1}{2}(10)\left[\omega_2(1.5)\right]^2 + \frac{1}{2}(7.5)\omega_2{}^2\right]$$

$$= 30\omega_2{}^2$$

Since the system is initially at rest, $T_1 = 0$. Referring to Fig. b, **N** does no work, while **W** does positive work. When $\theta = 180°$, **W** displaces vertically downward through a distance of $h = 1.5\cos 30° = 1.2990$ m. Thus, the work done by **W** is

$$U_W = Wh = 10(9.81)(1.2990) = 127.44\ \text{J}$$

Principle of Work and Energy:

$$T_1 + \Sigma U_{1-2} = T_2$$

$$0 + 2(127.44) = 30\omega_2{}^2$$

$$\omega_2 = 2.91\ \text{rad/s}$$ **Ans.**

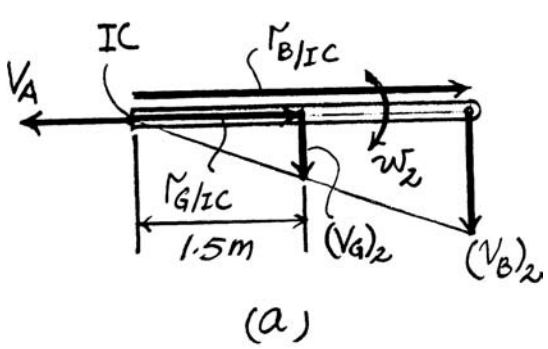

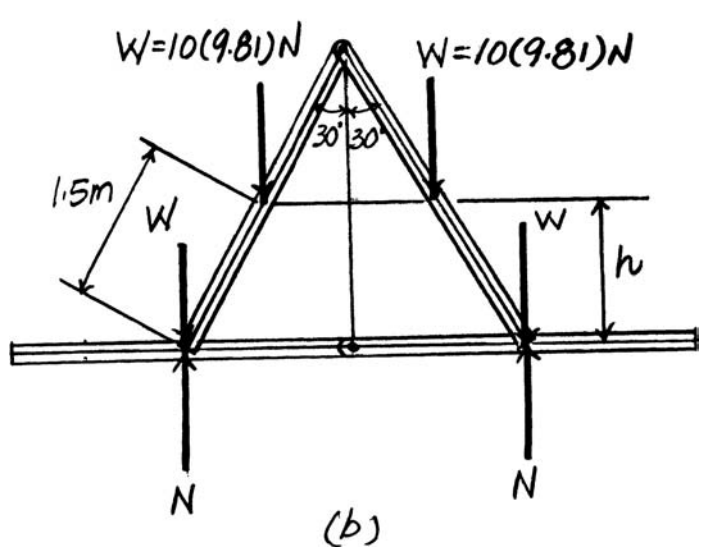

© 2010 Pearson Education, Inc., Upper Saddle River, NJ. All rights reserved. This material is protected under all copyright laws as they currently exist. No portion of this material may be reproduced, in any form or by any means, without permission in writing from the publisher.

18–22. Determine the angular velocity of the two 10-kg rods when $\theta = 90°$ if they are released from rest in the position $\theta = 60°$. Neglect friction.

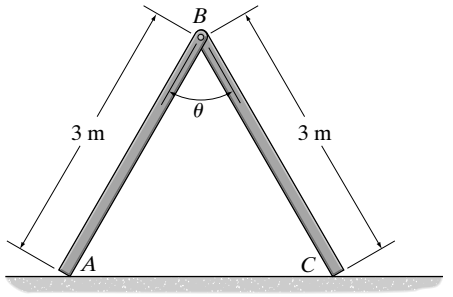

Kinetic Energy and Work: Due to symmetry, the velocity of point B is directed along the vertical, as shown in Fig. a. Also, $(\omega_{AB})_2 = (\omega_{BC})_2 = \omega_2$ and $\left(v_{G_{AB}}\right)_2 = \left(v_{G_{BC}}\right)_2 = (v_G)_2$. From the geometry of this diagram, $r_{G/IC} = 1.5$ m. Thus, $(v_G)_2 = \omega_2 r_{G/IC} = \omega_2(1.5)$. The mass moment of inertia of the rod about its mass center is $I_G = \frac{1}{12}(10)\left(3^2\right) = 7.5\ \text{kg}\cdot\text{m}^2$. Thus, the final kinetic energy is

$$T_2 = (T_{AB})_2 + (T_{BC})_2$$

$$= 2\left[\frac{1}{2}m(v_G)_2{}^2 + \frac{1}{2}I_G\omega_2{}^2\right]$$

$$= 2\left[\frac{1}{2}(10)[\omega_2(1.5)]^2 + \frac{1}{2}(7.5)\omega_2{}^2\right]$$

$$= 30\omega_2{}^2$$

Since the system is initially at rest, $T_1 = 0$. Referring to Fig. b, **N** does no work, while **W** does positive work. When $\theta = 90°$, **W** displaces vertically downward through a distance of $h = 1.5\cos 30° - 1.5\cos 45° = 0.2384$ m. Thus, the work done by **W** is

$$U_W = Wh = 10(9.81)(0.2384) = 23.38\ \text{J}$$

Principle of Work and Energy:

$$T_1 + \Sigma U_{1-2} = T_2$$

$$0 + 2(23.38) = 30\omega_2{}^2$$

$$\omega_2 = 1.25\ \text{rad/s} \qquad \textbf{Ans.}$$

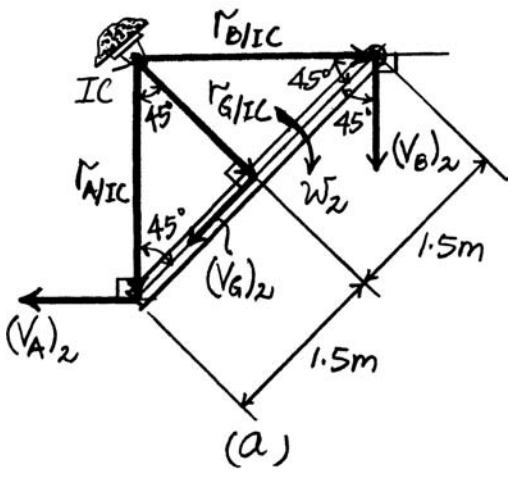

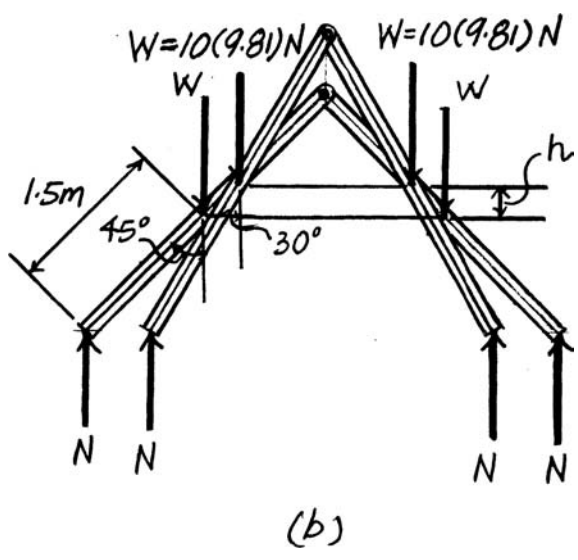

© 2010 Pearson Education, Inc., Upper Saddle River, NJ. All rights reserved. This material is protected under all copyright laws as they currently exist. No portion of this material may be reproduced, in any form or by any means, without permission in writing from the publisher.

18–23. If the 50-lb bucket is released from rest, determine its velocity after it has fallen a distance of 10 ft. The windlass A can be considered as a 30-lb cylinder, while the spokes are slender rods, each having a weight of 2 lb. Neglect the pulley's weight.

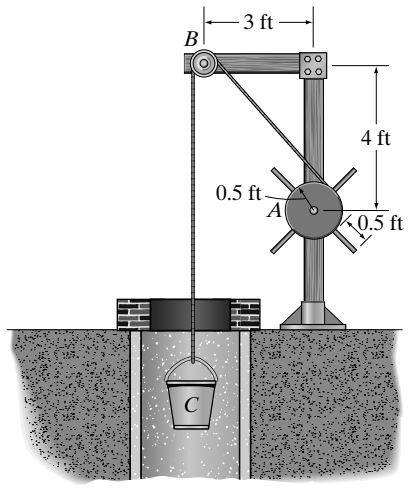

Kinetic Energy and Work: Since the windlass rotates about a fixed axis, $v_C = \omega_A r_A$ or $\omega_A = \dfrac{v_C}{r_A} = \dfrac{v_C}{0.5} = 2v_C$. The mass moment of inertia of the windlass about its mass center is

$$I_A = \frac{1}{2}\left(\frac{30}{32.2}\right)(0.5^2) + 4\left[\frac{1}{12}\left(\frac{2}{32.2}\right)(0.5^2) + \frac{2}{32.2}(0.75^2)\right] = 0.2614 \text{ slug}\cdot\text{ft}^2$$

Thus, the kinetic energy of the system is

$$\begin{aligned} T &= T_A + T_C \\ &= \frac{1}{2}I_A\omega^2 + \frac{1}{2}m_C v_C{}^2 \\ &= \frac{1}{2}(0.2614)(2v_C)^2 + \frac{1}{2}\left(\frac{50}{32.2}\right)v_C{}^2 \\ &= 1.2992 v_C{}^2 \end{aligned}$$

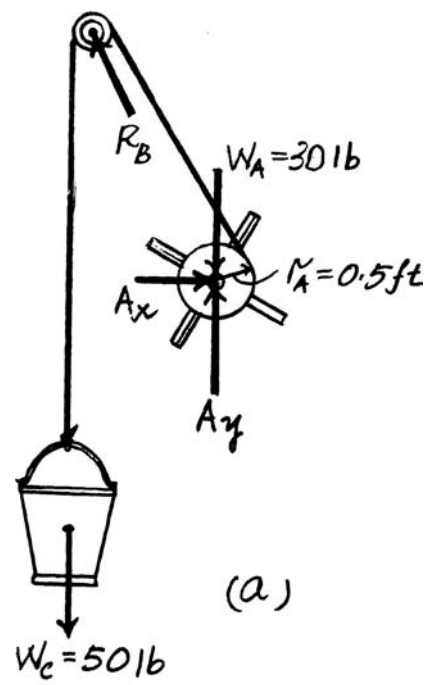

Since the system is initially at rest, $T_1 = 0$. Referring to Fig. a, $\mathbf{W}_A$, $\mathbf{A}_x$, $\mathbf{A}_y$, and $\mathbf{R}_B$ do no work, while $\mathbf{W}_C$ does positive work. Thus, the work done by $\mathbf{W}_C$, when it displaces vertically downward through a distance of $s_C = 10$ ft, is

$$U_{W_C} = W_C s_C = 50(10) = 500 \text{ ft}\cdot\text{lb}$$

Principle of Work and Energy:

$$T_1 + \Sigma U_{1-2} = T_2$$

$$0 + 500 = 1.2992 v_C{}^2$$

$$v_C = 19.6 \text{ ft/s} \qquad \textbf{Ans.}$$

© 2010 Pearson Education, Inc., Upper Saddle River, NJ. All rights reserved. This material is protected under all copyright laws as they currently exist. No portion of this material may be reproduced, in any form or by any means, without permission in writing from the publisher.

***18–24.** If corner A of the 60-kg plate is subjected to a vertical force of $P = 500$ N, and the plate is released from rest when $\theta = 0°$, determine the angular velocity of the plate when $\theta = 45°$.

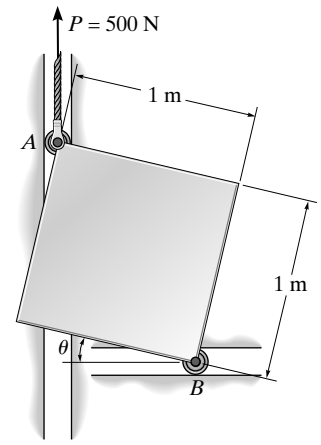

Kinetic Energy and Work: Since the plate is initially at rest, $T_1 = 0$. Referring to Fig. a,

$$(v_G)_2 = \omega_2 r_{G/IC} = \omega_2(1 \cos 45°) = 0.7071\omega_2$$

The mass moment of inertia of the plate about its mass center is $I_G = \frac{1}{12} m\left(a^2 + b^2\right) = \frac{1}{12}(60)\left(1^2 + 1^2\right) = 10\ \text{kg}\cdot\text{m}^2$. Thus, the final kinetic energy is

$$T_2 = \frac{1}{2} m(v_G)_2{}^2 + \frac{1}{2} I_G \omega_2{}^2$$

$$= \frac{1}{2} m(60)(0.7071\omega_2)^2 + \frac{1}{2}(10)\omega_2{}^2$$

$$= 20\omega_2{}^2$$

Referring to Fig. b, $\mathbf{N}_A$ and $\mathbf{N}_B$ do no work, while $\mathbf{P}$ does positive work, and $\mathbf{W}$ does negative work. When $\theta = 45°$, $\mathbf{W}$ and $\mathbf{P}$ displace upwards through a distance of $h = 1 \cos 45° - 0.5 = 0.2071$ m and $s_P = 2(1 \cos 45°) - 1 = 0.4142$ m. Thus, the work done by $\mathbf{P}$ and $\mathbf{W}$ is

$$U_P = Ps_P = 500(0.4142) = 207.11\,\mathbf{J}$$

$$U_W = -Wh = -60(9.81)(0.2071) = -121.90\,\mathbf{J}$$

Principle of Work and Energy:

$$T_1 + \Sigma U_{1-2} = T_2$$

$$0 + [207.11 - 121.90] = 20\omega_2{}^2$$

$$\omega_2 = 2.06\ \text{rad/s} \qquad \textbf{Ans.}$$

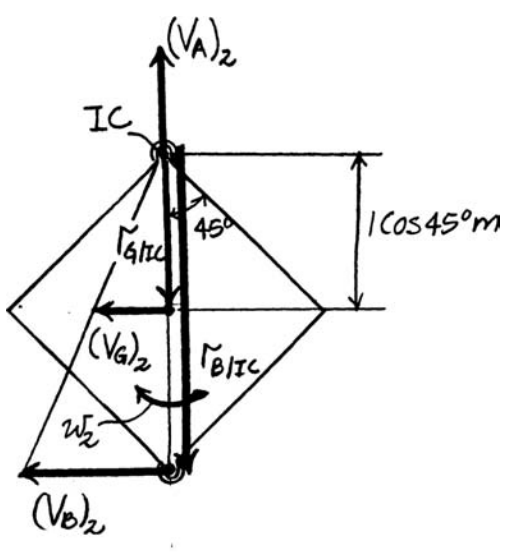

(a)

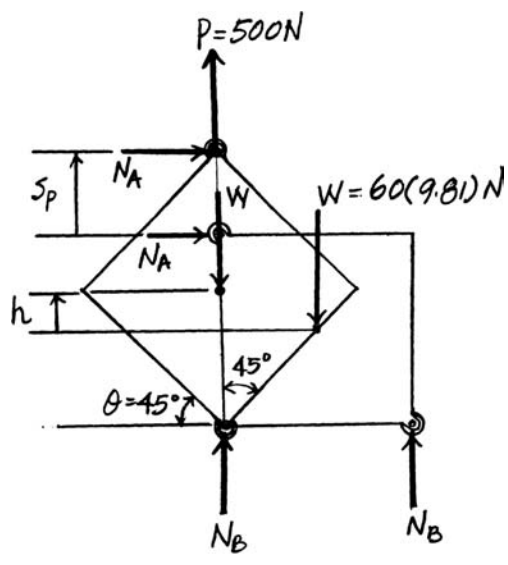

(b)

© 2010 Pearson Education, Inc., Upper Saddle River, NJ. All rights reserved. This material is protected under all copyright laws as they currently exist. No portion of this material may be reproduced, in any form or by any means, without permission in writing from the publisher.

•18–25. The spool has a mass of 100 kg and a radius of gyration of 400 mm about its center of mass O. If it is released from rest, determine its angular velocity after its center O has moved down the plane a distance of 2 m. The contact surface between the spool and the inclined plane is smooth.

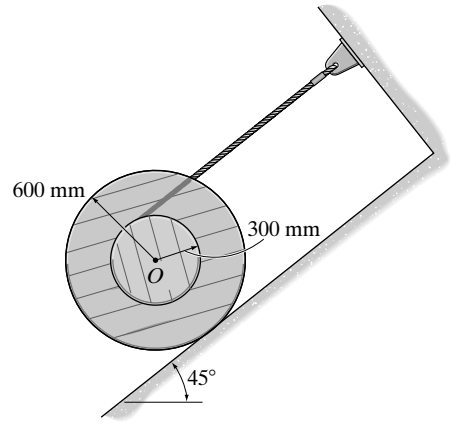

Kinetic Energy and Work: Referring to Fig. *a*,

$$v_O = \omega r_{O/IC} = \omega(0.3)$$

The mass moment of inertia of the spool about its mass center is $I_O = mk_O{}^2 = 100\left(0.4^2\right) = 16\ \text{kg}\cdot\text{m}^2$. Thus, the final kinetic energy of the spool is

$$T = \frac{1}{2}mv_O{}^2 + \frac{1}{2}I_O\omega^2$$

$$= \frac{1}{2}(100)[\omega(0.3)]^2 + \frac{1}{2}(16)\omega^2$$

$$= 12.5\omega^2$$

Since the spool is initially at rest, $T_1 = 0$. Referring to Fig. *b*, **T** and **N** do no work, while **W** does positive work. When the center of the spool moves down the plane through a distance of $s_O = 2$ m, **W** displaces vertically downward $h = s_O \cos 45° = 2 \cos 45° = 1.4142$ m. Thus, the work done by **W** is

$$U_W = Wh = 100(9.81)(1.4142) = 1387.34\ \text{N}$$

Principle of Work and Energy:

$$T_1 + \Sigma U_{1-2} = T_2$$

$$0 + 1387.34 = 12.5\omega^2$$

$$\omega = 10.5\ \text{rad/s} \qquad \textbf{Ans.}$$

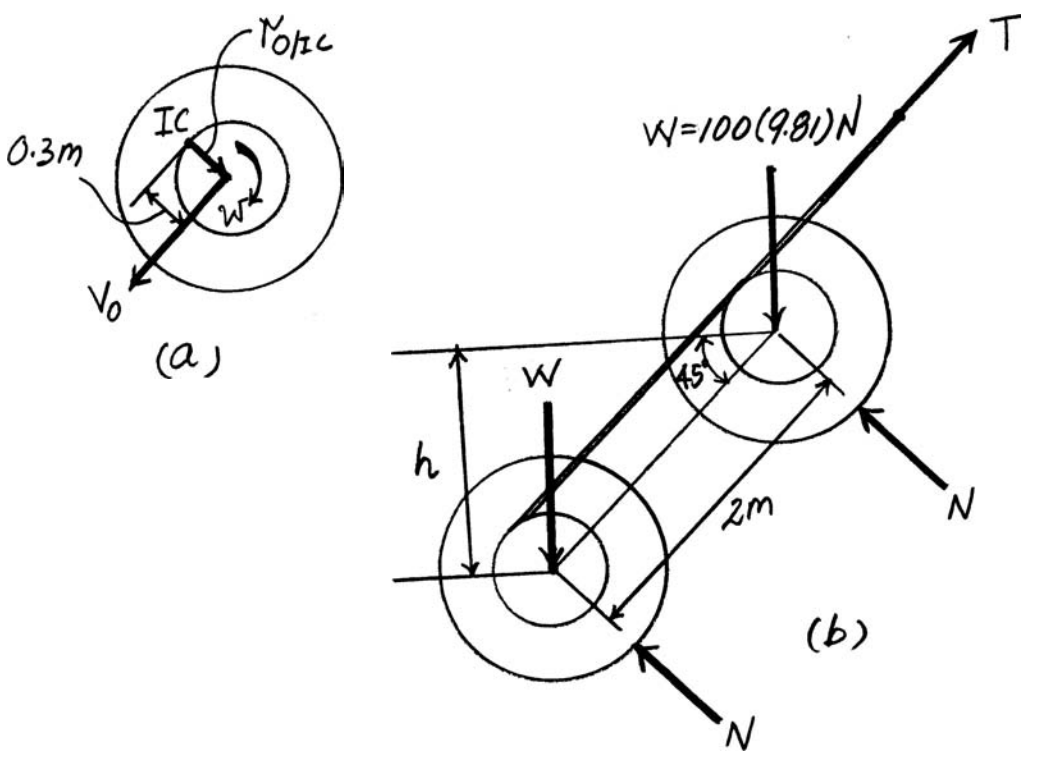

© 2010 Pearson Education, Inc., Upper Saddle River, NJ. All rights reserved. This material is protected under all copyright laws as they currently exist. No portion of this material may be reproduced, in any form or by any means, without permission in writing from the publisher.

18–26. The spool has a mass of 100 kg and a radius of gyration of 400 mm about its center of mass O. If it is released from rest, determine its angular velocity after its center O has moved down the plane a distance of 2 m. The coefficient of kinetic friction between the spool and the inclined plane is $\mu_k = 0.15$.

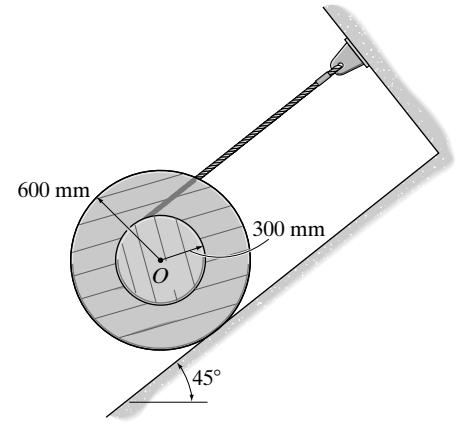

Kinetic Energy and Work: Referring to Fig. a,

$$v_O = \omega r_{O/IC} = \omega(0.3)$$

The mass moment of inertia of the spool about its mass center is $I_O = mk_O{}^2 = 100\left(0.4^2\right) = 16\ \text{kg}\cdot\text{m}^2$. Thus, the kinetic energy of the spool is

$$T = \frac{1}{2}mv_O{}^2 + \frac{1}{2}I_O\omega^2$$

$$= \frac{1}{2}(100)\left[\omega(0.3)\right]^2 + \frac{1}{2}(16)\omega^2$$

$$= 12.5\omega^2$$

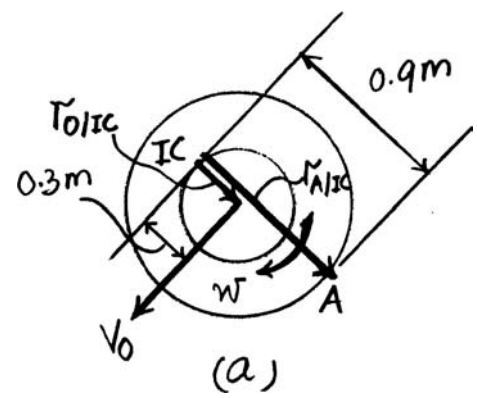

Since the spool is initially at rest, $T_1 = 0$. Referring to Fig. b, **T** and **N** do no work, while **W** does positive work, and $\mathbf{F}_f$ does negative work. Since the spool slips at the contact point on the inclined plane, $F_f = \mu_k N = 0.15N$, where **N** can be obtained using the equation of motion,

$$\Sigma F_{y'} = m(a_a)_{y'}; \qquad N - 100(9.81)\cos 45° = 0 \qquad\qquad N = 693.67\ \text{N}$$

Thus, $F_f = 0.15(693.67) = 104.05$ N. When the center of the spool moves down the inclined plane through a distance of $s_O = 2$ m, **W** displaces vertically downward $h = s_O \sin 45° = 2\sin 45° = 1.4142$ m. Also, the contact point A on the outer rim of the spool travels a distance of $s_A = \left(\dfrac{r_{A/IC}}{r_{O/IC}}\right)s_O = \dfrac{0.9}{0.3}(2) = 6$ m, Fig. a. Thus, the work done by **W** and $\mathbf{F}_f$ is

$$U_W = Wh = 100(9.81)(1.4142) = 1387.34\ \text{J}$$

$$U_{F_f} = -F_f s_A = -104.05(6) = -624.30\ \text{J}$$

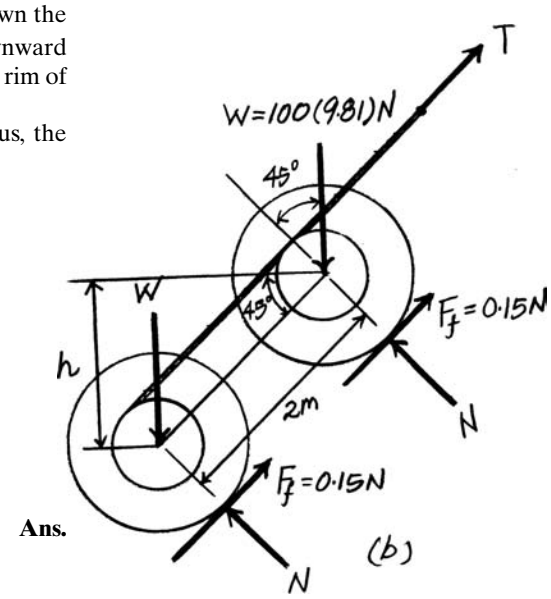

Principle of Work and Energy:

$$T_1 + \Sigma U_{1-2} = T_2$$

$$0 + [1387.34 - 624.30] = 12.5\omega^2$$

$$\omega = 7.81\ \text{rad/s}$$ **Ans.**

© 2010 Pearson Education, Inc., Upper Saddle River, NJ. All rights reserved. This material is protected under all copyright laws as they currently exist. No portion of this material may be reproduced, in any form or by any means, without permission in writing from the publisher.

18–27. The uniform door has a mass of 20 kg and can be treated as a thin plate having the dimensions shown. If it is connected to a torsional spring at A, which has a stiffness of $k = 80\ \mathrm{N \cdot m/rad}$, determine the required initial twist of the spring in radians so that the door has an angular velocity of 12 rad/s when it closes at $\theta = 0°$ after being opened at $\theta = 90°$ and released from rest. *Hint:* For a torsional spring $M = k\theta$, when k is the stiffness and θ is the angle of twist.

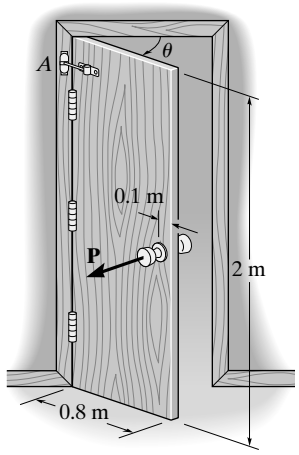

$$T_1 + \Sigma U_{1-2} = T_2$$

$$0 + \int_{\theta_O}^{\theta_O + \frac{\pi}{2}} 80\theta\, d\theta = \frac{1}{2}\left[\frac{1}{3}(20)(0.8)^2\right](12)^2$$

$$40\left[\left(\theta_O + \tfrac{\pi}{2}\right)^2 - \theta_0^2\right] = 307.2$$

$$\theta_O = 1.66\ \mathrm{rad}$$ **Ans.**

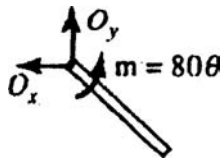

© 2010 Pearson Education, Inc., Upper Saddle River, NJ. All rights reserved. This material is protected under all copyright laws as they currently exist. No portion of this material may be reproduced, in any form or by any means, without permission in writing from the publisher.

***18–28.** The 50-lb cylinder A is descending with a speed of 20 ft/s when the brake is applied. If wheel B must be brought to a stop after it has rotated 5 revolutions, determine the constant force **P** that must be applied to the brake arm. The coefficient of kinetic friction between the brake pad C and the wheel is $\mu_k = 0.5$. The wheel's weight is 25 lb, and the radius of gyration about its center of mass is $k = 0.6$ ft.

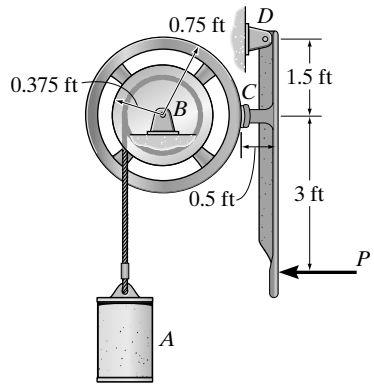

Equilibrium: Referring to Fig. a, we have

$$\circlearrowleft + \Sigma M_D = 0; \qquad N_C(1.5) - 0.5N_C(0.5) - P(4.5) = 0$$

$$N_C = 3.6\,P$$

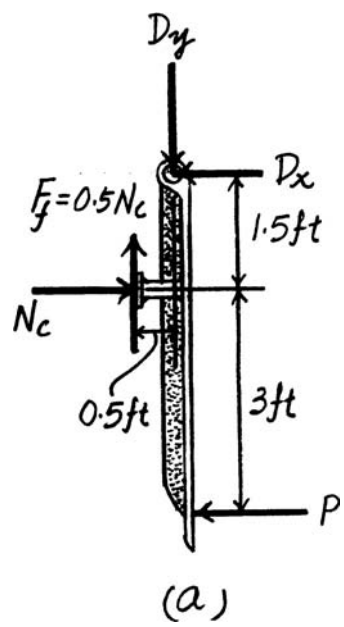

Kinetic Energy and Work: Since the wheel rotates about a fixed axis, $(\omega_B)_1 = \dfrac{(v_A)_1}{r_A} = \dfrac{20}{0.375} = 53.33$ rad/s. The mass moment of inertia of the wheel about its mass center is $I_B = m_B k^2 = \dfrac{25}{32.2}(0.6^2) = 0.2795$ slug · ft^2. Thus, the initial kinetic energy of the system is

$$T_1 = (T_A)_1 + (T_B)_1$$

$$= \frac{1}{2} m_A (v_A)_1^2 + \frac{1}{2} I_B (\omega_B)_1^2$$

$$= \frac{1}{2}\left(\frac{50}{32.2}\right)(20^2) + \frac{1}{2}(0.2795)(53.33^2)$$

$$= 708.07 \text{ ft} \cdot \text{lb}$$

Since the system is brought to rest, $T_2 = 0$. Referring to Fig. b, $\mathbf{B}_x$, $\mathbf{B}_y$, $\mathbf{W}_B$, and $\mathbf{N}_C$ do no work, while $\mathbf{W}_A$ does positive work, and $\mathbf{F}_f$ does negative work. When wheel B rotates through the angle $\theta = (5 \text{ rev})\left(\dfrac{2\pi \text{ rad}}{1 \text{ rev}}\right) = 10\pi$ rad, $\mathbf{W}_A$ displaces $s_A = r_A\theta = 0.375(10\pi) = 3.75\pi$ ft vertically downward, and the contact point C on the outer rim of the wheel travels a distance of $s_C = r_B\theta = 0.75(10\pi) = 7.5\pi$. Thus, the work done by $\mathbf{W}_A$ and $\mathbf{F}_f$ is

$$U_{W_A} = W_A s_A = 50(3.75\pi) = 187.5\pi \text{ ft} \cdot \text{lb}$$

$$U_{F_f} = -F_f s_C = -1.8P(7.5\pi) = -13.5\pi P$$

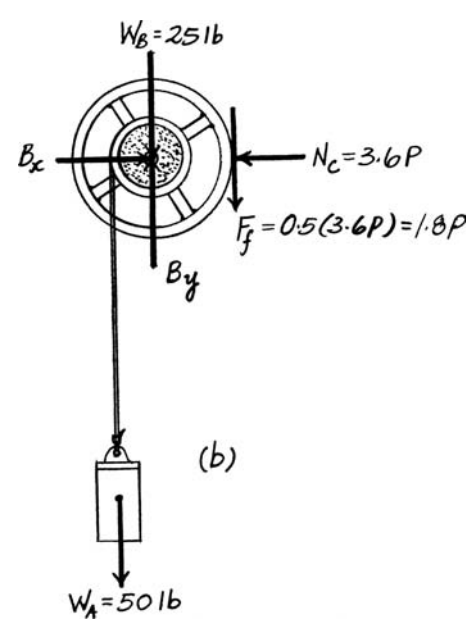

Principle of Work and Energy:

$$T_1 + \Sigma U_{1-2} = T_2$$

$$708.07 + [187.5\pi - 13.5\pi P] = 0$$

$$P = 30.6 \text{ lb} \qquad \textbf{Ans.}$$

© 2010 Pearson Education, Inc., Upper Saddle River, NJ. All rights reserved. This material is protected under all copyright laws as they currently exist. No portion of this material may be reproduced, in any form or by any means, without permission in writing from the publisher.

•18–29. When a force of $P = 30$ lb is applied to the brake arm, the 50-lb cylinder A is descending with a speed of 20 ft/s. Determine the number of revolutions wheel B will rotate before it is brought to a stop. The coefficient of kinetic friction between the brake pad C and the wheel is $\mu_k = 0.5$. The wheel's weight is 25 lb, and the radius of gyration about its center of mass is $k = 0.6$ ft.

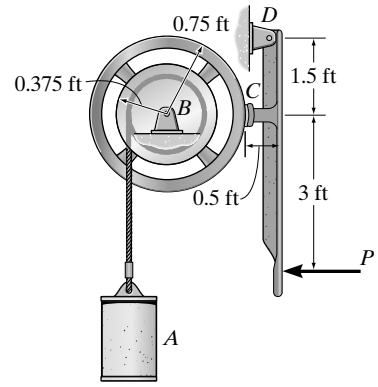

Equilibrium: Referring to Fig. a,

$$\circlearrowleft + \Sigma M_D = 0; \qquad N_C(1.5) - 0.5N_C(0.5) - 30(4.5) = 0$$

$$N_C = 108 \text{ lb}$$

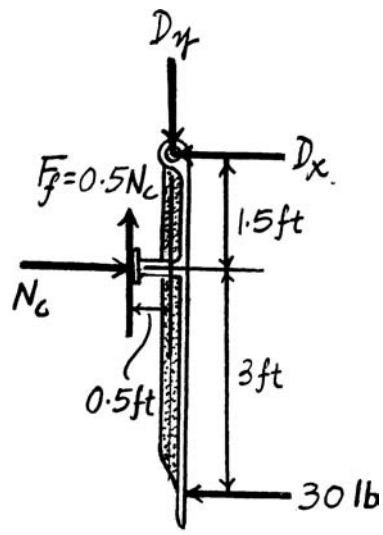

(a)

Kinetic Energy and Work: Since the wheel rotates about a fixed axis, $(\omega_B)_1 = \dfrac{(v_A)_1}{r_A} = \dfrac{20}{0.375} = 53.33$ rad/s. The mass moment of inertia of the wheel about its mass center is $I_B = m_B k^2 = \dfrac{25}{32.2}\left(0.6^2\right) = 0.2795 \text{ slug}\cdot\text{ft}^2$. Thus, the initial kinetic energy of the system is

$$T_1 = (T_A)_1 + (T_B)_1$$

$$= \frac{1}{2} m_A (v_A)_1^2 + \frac{1}{2} I_B (\omega_B)_1^2$$

$$= \frac{1}{2}\left(\frac{50}{32.2}\right)\left(20^2\right) + \frac{1}{2}(0.2795)\left(53.33^2\right)$$

$$= 708.07 \text{ ft}\cdot\text{lb}$$

Since the system is brought to rest, $T_2 = 0$. Referring to Fig. b, $\mathbf{B}_x$, $\mathbf{B}_y$, $\mathbf{W}_B$, and N_C do no work, while $\mathbf{W}_A$ does positive work, and $\mathbf{F}_f$ does negative work. When wheel B rotates through the angle θ, $\mathbf{W}_A$ displaces $s_A = r_A\theta = 0.375\theta$ and the contact point on the outer rim of the wheel travels a distance of $s_C = r_B\theta = 0.75\theta$. Thus, the work done by $\mathbf{W}_A$ and $\mathbf{F}_f$ are

$$U_{W_A} = W_A s_A = 50(0.375\theta) = 18.75\theta$$

$$U_{F_f} = -F_f s_C = -0.5(108)(0.75\theta) = -40.5\theta$$

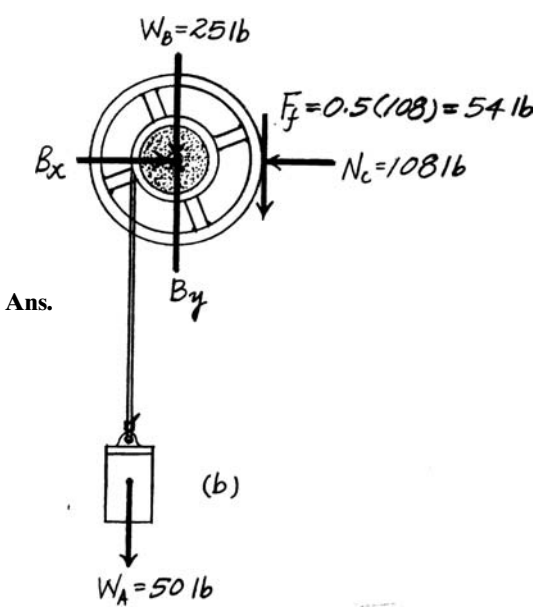

Principle of Work and Energy:

$$T_1 + \Sigma U_{1-2} = T_2$$

$$708.07 + [18.75\theta - 40.5\theta] = 0$$

$$\theta = 32.55 \text{ rad}\left(\frac{1 \text{ rev}}{2\pi}\right) = 5.18 \text{ rev} \qquad \textbf{Ans.}$$

© 2010 Pearson Education, Inc., Upper Saddle River, NJ. All rights reserved. This material is protected under all copyright laws as they currently exist. No portion of this material may be reproduced, in any form or by any means, without permission in writing from the publisher.

18–30. The 100-lb block is transported a short distance by using two cylindrical rollers, each having a weight of 35 lb. If a horizontal force $P = 25$ lb is applied to the block, determine the block's speed after it has been displaced 2 ft to the left. Originally the block is at rest. No slipping occurs.

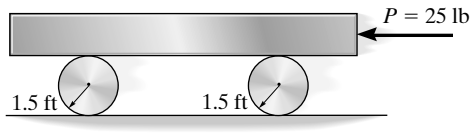

$$T_1 + \Sigma U_{1-2} = T_2$$

$$0 + 25(2) = \frac{1}{2}\left(\frac{100}{32.2}\right)(v_B)^2 + 2\left[\frac{1}{2}\left(\frac{35}{32.2}\right)\left(\frac{v_B}{2}\right)^2 + \frac{1}{2}\left(\frac{1}{2}\left(\frac{35}{32.2}\right)(1.5)^2\right)\left(\frac{v_B}{3}\right)^2\right]$$

$$v_B = 5.05 \text{ ft/s} \qquad \textbf{Ans.}$$

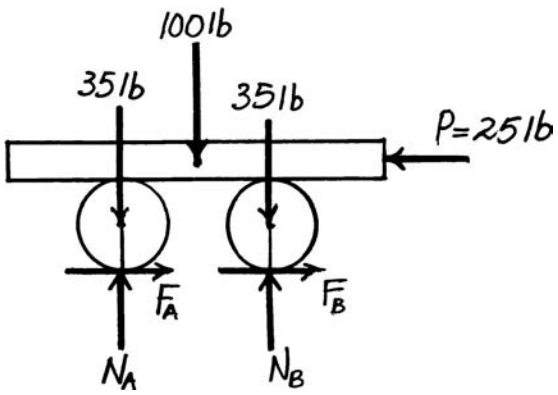

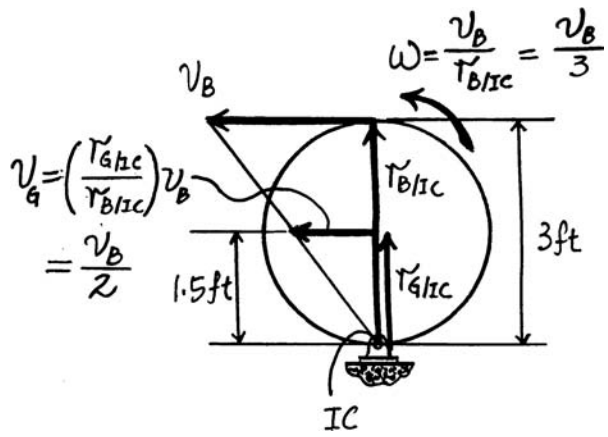

18–31. The slender beam having a weight of 150 lb is supported by two cables. If the cable at end B is cut so that the beam is released from rest when $\theta = 30°$, determine the speed at which end A strikes the wall. Neglect friction at B.

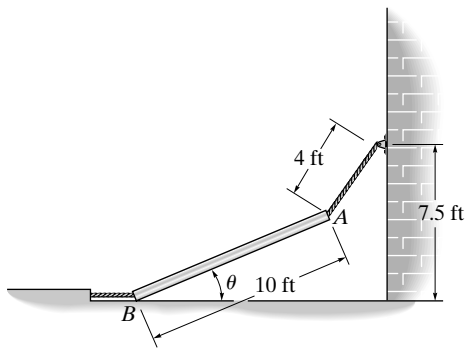

In the final position, the rod is in translation since the IC is at infinity.

$$T_1 + \Sigma U_{1-2} = T_2$$

$$0 + 150(2.5 - 1.75) = \frac{1}{2}\left(\frac{150}{32.2}\right)v_G^2$$

$$v_G = v_A = 6.95 \text{ ft/s} \qquad \textbf{Ans.}$$

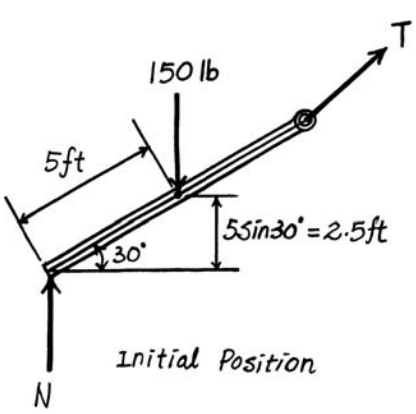

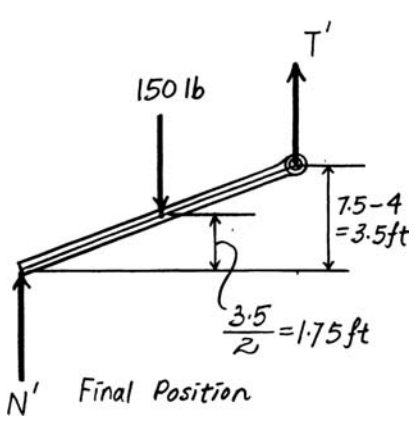

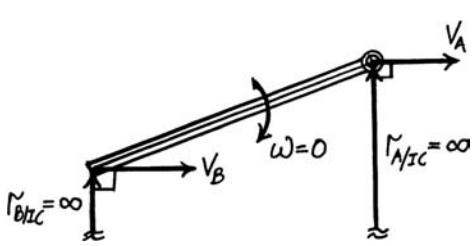

© 2010 Pearson Education, Inc., Upper Saddle River, NJ. All rights reserved. This material is protected under all copyright laws as they currently exist. No portion of this material may be reproduced, in any form or by any means, without permission in writing from the publisher.

***18–32.** The assembly consists of two 15-lb slender rods and a 20-lb disk. If the spring is unstretched when $\theta = 45°$ and the assembly is released from rest at this position, determine the angular velocity of rod AB at the instant $\theta = 0°$. The disk rolls without slipping.

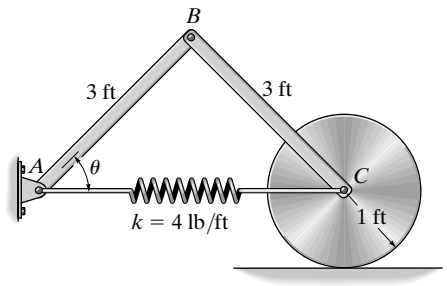

$$T_1 + \Sigma U_{1-2} = T_2$$

$$[0 + 0] + 2(15)(1.5)\sin 45° - \frac{1}{2}(4)\left[6 - 2(3)\cos 45°\right]^2 = 2\left[\frac{1}{2}\left(\frac{1}{3}\left(\frac{15}{32.2}\right)(3)^2\right)\omega_{AB}^2\right]$$

$$\omega_{AB} = 4.28 \text{ rad/s}$$ **Ans.**

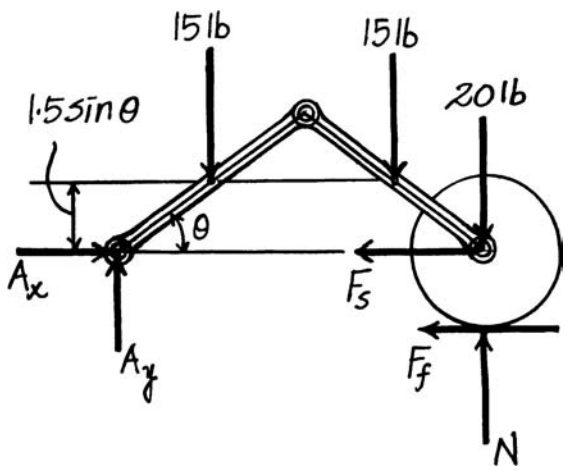

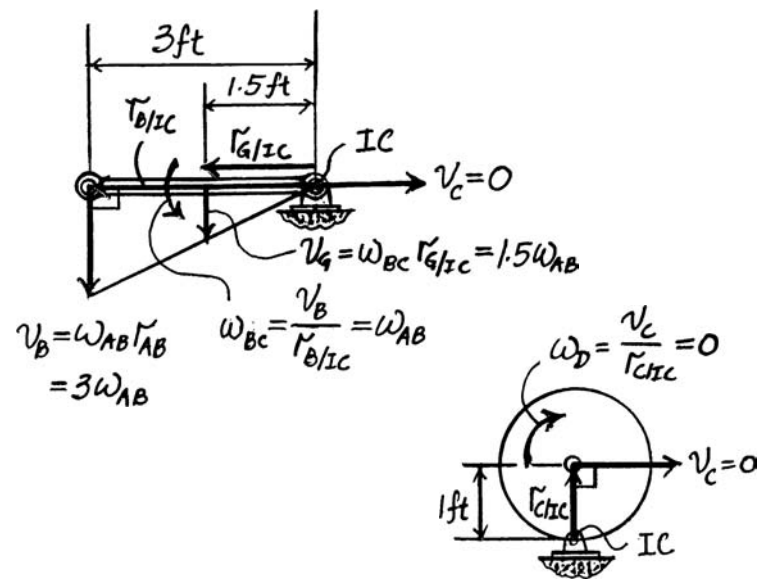

18–33. The beam has a weight of 1500 lb and is being raised to a vertical position by pulling very slowly on its bottom end A. If the cord fails when $\theta = 60°$ and the beam is essentially at rest, determine the speed of A at the instant cord BC becomes vertical. Neglect friction and the mass of the cords, and treat the beam as a slender rod.

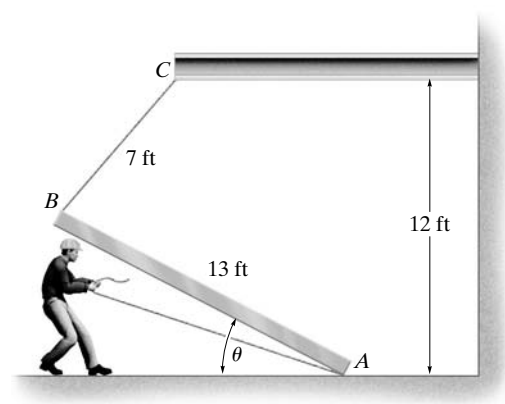

$$T_1 + \Sigma U_{1-2} = T_2$$

$$0 + 1500(5.629) - 1500(2.5) = \frac{1}{2}\left(\frac{1500}{32.2}\right)(v_G)^2$$

$$v_G = v_A = 14.2 \text{ ft/s}$$ **Ans.**

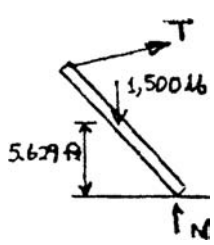

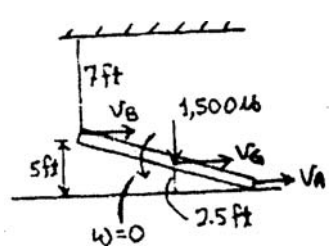

© 2010 Pearson Education, Inc., Upper Saddle River, NJ. All rights reserved. This material is protected under all copyright laws as they currently exist. No portion of this material may be reproduced, in any form or by any means, without permission in writing from the publisher.

18–34. The uniform slender bar that has a mass m and a length L is subjected to a uniform distributed load w_0, which is always directed perpendicular to the axis of the bar. If the bar is released from rest from the position shown, determine its angular velocity at the instant it has rotated 90°. Solve the problem for rotation in (a) the horizontal plane, and (b) the vertical plane.

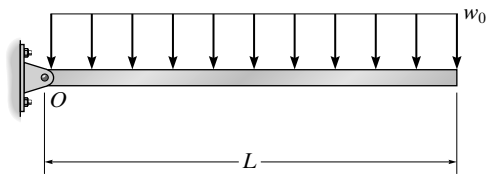

a)
$$T_1 + \Sigma U_{1-2} = T_2$$

$$[0] + \int_0^{\frac{\pi}{2}} \int_0^L (w_0\,dx)(x\,d\theta) = \frac{1}{2}\left(\frac{1}{3}mL^2\right)\omega^2$$

$$\int_0^{\frac{\pi}{2}} \frac{w_0 L^2}{2} d\theta = \frac{1}{6}mL^2\omega^2$$

$$\frac{w_0 L^2}{2}\left(\frac{\pi}{2}\right) = \frac{1}{6}mL^2\omega^2$$

$$\omega = \sqrt{\frac{3\pi}{2}\left(\frac{w_0}{m}\right)} \qquad \textbf{Ans.}$$

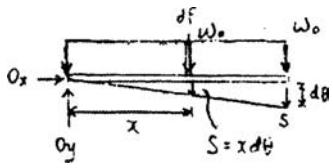

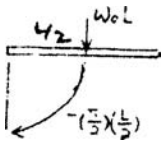

Note: The work of the distributed load can also be determined from its resultant.

$$U_{1-2} = w_0 L\left(\frac{\pi}{2}\right)\left(\frac{L}{2}\right) = \frac{w_0}{4}\pi L^2$$

b)
$$T_1 + \Sigma U_{1-2} = T_2$$

$$[0] + \frac{w_0}{4}\pi L^2 + mg\left(\frac{L}{2}\right) = \frac{1}{2}\left(\frac{1}{3}mL^2\right)\omega^2$$

$$\omega^2 = \frac{3}{2}\frac{w_0\,\pi L}{mL} + \frac{mg(6)}{2mL}$$

$$\omega = \sqrt{\frac{3\pi}{2}\frac{w_0}{m} + \frac{3g}{L}} \qquad \textbf{Ans.}$$

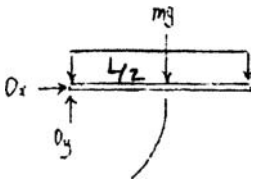

18–35. Solve Prob. 18–5 using the conservation of energy equation.

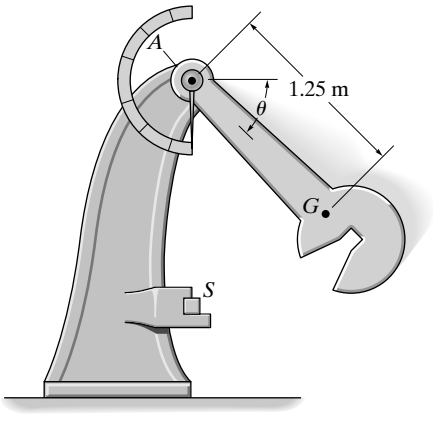

Datum at lowest point.

$$T_1 + V_1 = T_2 + V_2$$

$$0 + 50(9.81)(1.25) = \frac{1}{2}\left[50(1.75)^2\right]\omega^2 + 0$$

$$\omega = 2.83 \text{ rad/s} \qquad \textbf{Ans.}$$

© 2010 Pearson Education, Inc., Upper Saddle River, NJ. All rights reserved. This material is protected under all copyright laws as they currently exist. No portion of this material may be reproduced, in any form or by any means, without permission in writing from the publisher.

***18–36.** Solve Prob. 18–12 using the conservation of energy equation.

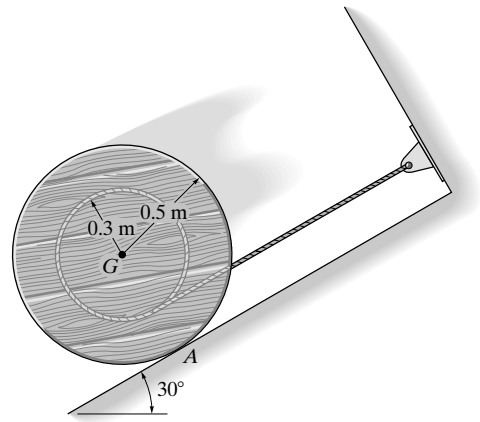

Datum at lowest point through G.

$$T_1 + V_1 = T_2 + V_2$$

$$0 + 60(9.81)(s \sin 30°) = \frac{1}{2}\left[60(0.3)^2\right](6)^2 + \frac{1}{2}(60)\left[(0.3)(6)\right]^2 + 0$$

$$s = 0.661 \text{ m}$$ **Ans.**

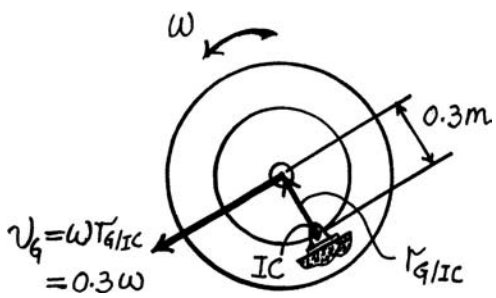

•18–37. Solve Prob. 18–32 using the conservation of energy equation.

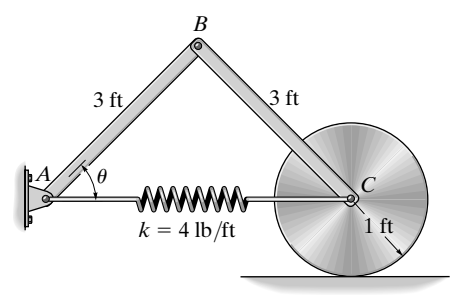

Datum at lowest point.

$$T_1 + V_1 = T_2 + V_2$$

$$0 + 2\left[15(1.5 \sin 45°)\right] = 2\left[\frac{1}{2}\left(\frac{1}{3}\left(\frac{15}{32.2}\right)(3)^2\right)\omega_{AB}^2\right] + \frac{1}{2}(4)\left[6 - 2(3 \cos 45°)\right]^2 + 0$$

$$\omega_{AB} = 4.28 \text{ rad/s}$$ **Ans.**

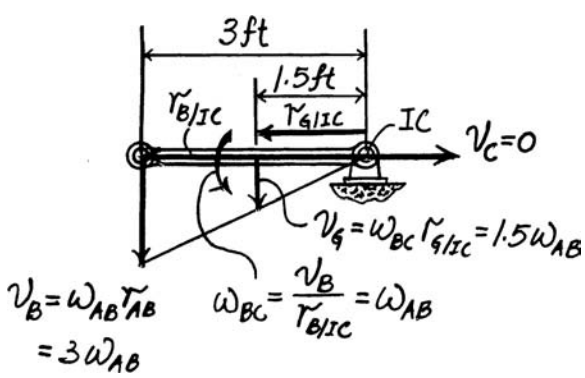

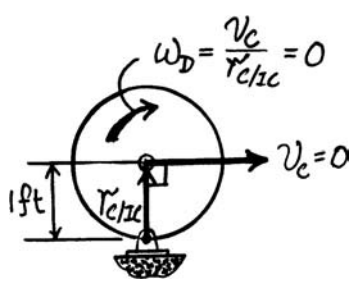

© 2010 Pearson Education, Inc., Upper Saddle River, NJ. All rights reserved. This material is protected under all copyright laws as they currently exist. No portion of this material may be reproduced, in any form or by any means, without permission in writing from the publisher.

18–38. Solve Prob. 18–31 using the conservation of energy equation.

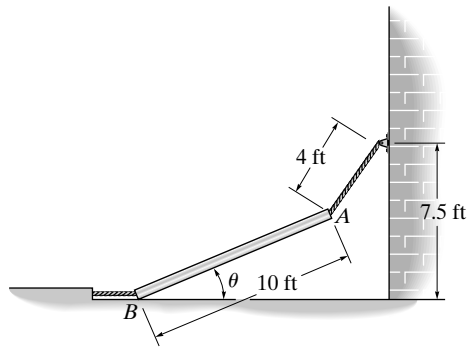

$$T_1 + V_1 = T_2 + V_2$$

$$0 + 150(2.5) = \frac{1}{2}\left(\frac{150}{32.2}\right)v_G^2 + 150(1.75)$$

$$v_G = 6.95 \text{ ft/s}$$

Since the rod is in translation at the final instant, then

$$v_A = 6.95 \text{ ft/s}$$ **Ans.**

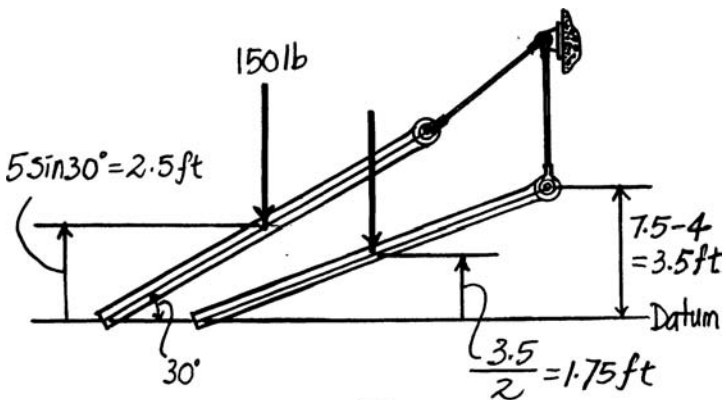

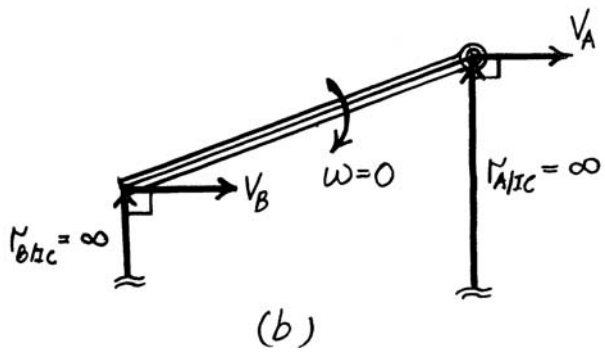

18–39. Solve Prob. 18–11 using the conservation of energy equation.

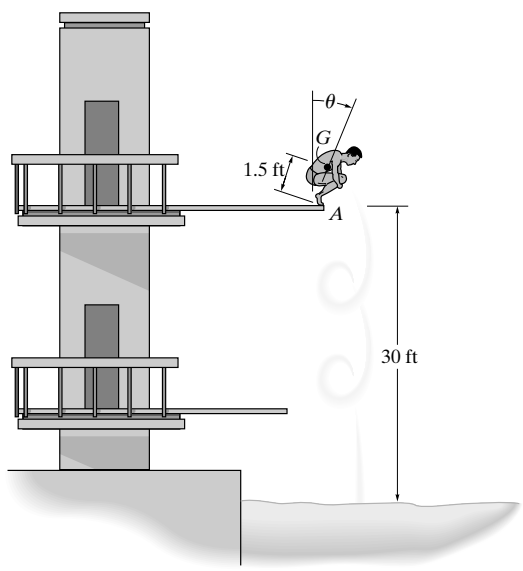

Datum at A.

$$T_1 + V_1 = T_2 + V_2$$

$$0 + 150(1.5) = \frac{1}{2}\left[\left(\frac{150}{32.2}\right)(1.2)^2\right]\omega^2 + \frac{1}{2}\left(\frac{150}{32.2}\right)(1.5\omega)^2 + 0$$

$$\omega = 5.117 \text{ rad/s}$$

Time to fall:

$$s = s_0 + v_0 t + \tfrac{1}{2}a_c t^2$$

$$30 = 0 + 1.5(5.117)t + \frac{1}{2}(32.2)t^2$$

Choosing the positive root: $t = 1.147$ s

$$\theta = \theta_0 + \omega_0 t + \frac{1}{2}\alpha_c t^2$$

$$\theta = 0 + 5.117(1.147) + 0 = 5.870 \text{ rad} = 0.934 \text{ rev.}$$ **Ans.**

© 2010 Pearson Education, Inc., Upper Saddle River, NJ. All rights reserved. This material is protected under all copyright laws as they currently exist. No portion of this material may be reproduced, in any form or by any means, without permission in writing from the publisher.

***18–40.** At the instant shown, the 50-lb bar rotates clockwise at 2 rad/s. The spring attached to its end always remains vertical due to the roller guide at C. If the spring has an unstretched length of 2 ft and a stiffness of $k = 6$ lb/ft, determine the angular velocity of the bar the instant it has rotated 30° clockwise.

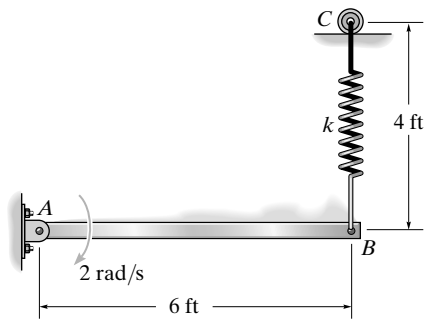

Datum through A.

$$T_1 + V_1 = T_2 + V_2$$

$$\frac{1}{2}\left[\frac{1}{3}\left(\frac{50}{32.2}\right)(6)^2\right](2)^2 + \frac{1}{2}(6)(4-2)^2 = \frac{1}{2}\left[\frac{1}{3}\left(\frac{50}{32.2}\right)(6)^2\right]\omega^2$$

$$+ \frac{1}{2}(6)(7-2)^2 - 50(1.5)$$

$$\omega = 2.30 \text{ rad/s}$$ **Ans.**

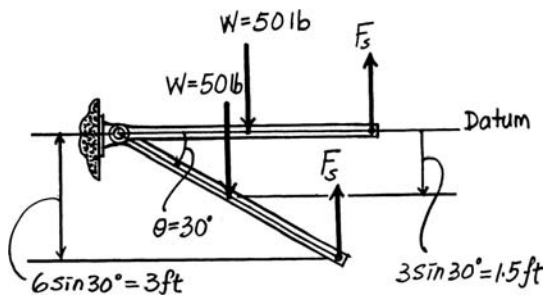

•18–41. At the instant shown, the 50-lb bar rotates clockwise at 2 rad/s. The spring attached to its end always remains vertical due to the roller guide at C. If the spring has an unstretched length of 2 ft and a stiffness of $k = 12$ lb/ft, determine the angle θ, measured from the horizontal, to which the bar rotates before it momentarily stops.

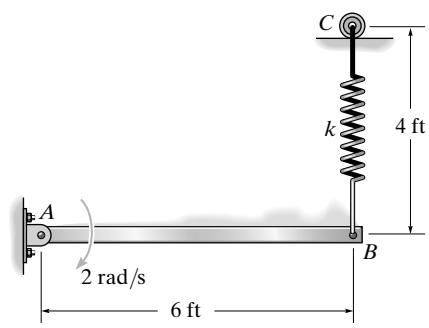

$$T_1 + V_1 = T_2 + V_2$$

$$\frac{1}{2}\left[\frac{1}{3}\left(\frac{50}{32.2}\right)(6)^2\right](2)^2 + \frac{1}{2}(12)(4-2)^2 = 0 + \frac{1}{2}(12)(4 + 6\sin\theta - 2)^2 - 50(3\sin\theta)$$

$$61.2671 = 24(1 + 3\sin\theta)^2 - 150\sin\theta$$

$$37.2671 = -6\sin\theta + 216\sin^2\theta$$

Set $x = \sin\theta$, and solve the quadratic equation for the positive root:

$$\sin\theta = 0.4295$$

$$\theta = 25.4°$$ **Ans.**

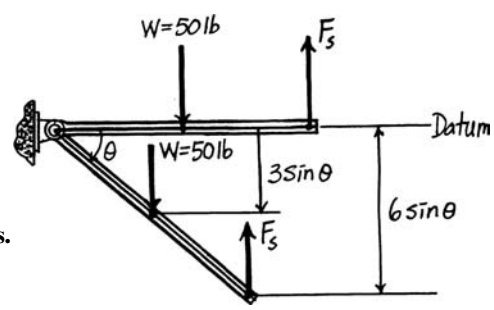

© 2010 Pearson Education, Inc., Upper Saddle River, NJ. All rights reserved. This material is protected under all copyright laws as they currently exist. No portion of this material may be reproduced, in any form or by any means, without permission in writing from the publisher.

18–42. A chain that has a negligible mass is draped over the sprocket which has a mass of 2 kg and a radius of gyration of $k_O = 50$ mm. If the 4-kg block A is released from rest from the position $s = 1$ m, determine the angular velocity of the sprocket at the instant $s = 2$ m.

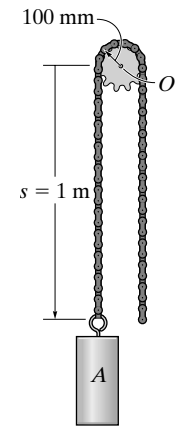

$$T_1 + V_1 = T_2 + V_2$$

$$0 + 0 + 0 = \frac{1}{2}(4)(0.1\,\omega)^2 + \frac{1}{2}\left[2(0.05)^2\right]\omega^2 - 4(9.81)(1)$$

$$\omega = 41.8 \text{ rad/s}$$ **Ans.**

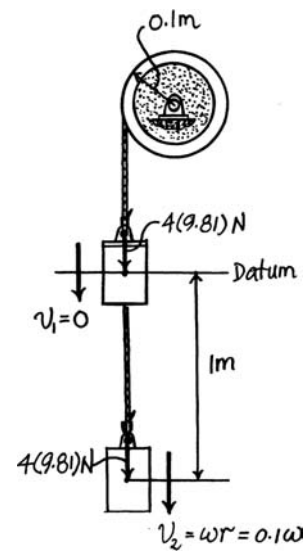

18–43. Solve Prob. 18–42 if the chain has a mass per unit length of 0.8 kg/m. For the calculation neglect the portion of the chain that wraps over the sprocket.

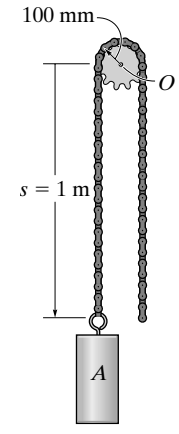

$$T_1 + V_1 = T_2 + V_2$$

$$0 - 4(9.81)(1) - 2\left[0.8(1)(9.81)(0.5)\right] = \frac{1}{2}(4)(0.1\,\omega)^2 + \frac{1}{2}\left[2(0.05)^2\right]\omega^2$$

$$+ \frac{1}{2}(0.8)(2)(0.1\,\omega)^2 - 4(9.81)(2) - 0.8(2)(9.81)(1)$$

$$\omega = 39.3 \text{ rad/s}$$ **Ans.**

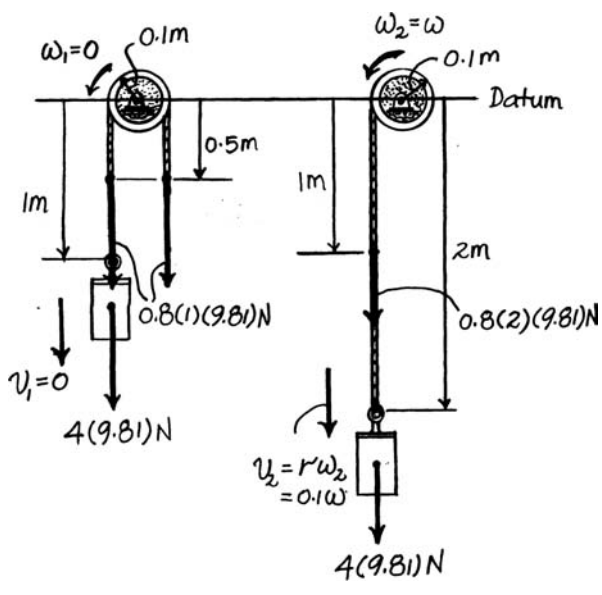

© 2010 Pearson Education, Inc., Upper Saddle River, NJ. All rights reserved. This material is protected under all copyright laws as they currently exist. No portion of this material may be reproduced, in any form or by any means, without permission in writing from the publisher.

***18–44.** The system consists of 60-lb and 20-lb blocks A and B, respectively, and 5-lb pulleys C and D that can be treated as thin disks. Determine the speed of block A after block B has risen 5 ft, starting from rest. Assume that the cord does not slip on the pulleys, and neglect the mass of the cord.

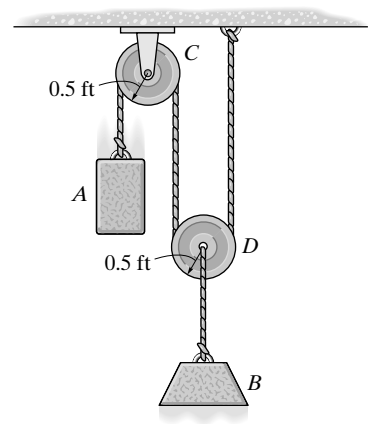

Kinematics: The speed of block A and B can be related using the position coordinate equation.

$$s_A + 2s_B = l \qquad \textbf{(1)}$$

$$\Delta s_A + 2\Delta s_B = 0 \qquad \Delta s_A + 2(5) = 0 \qquad \Delta s_A = -10\text{ ft} = 10\text{ ft}\downarrow$$

Taking time derivative of Eq. (1), we have

$$v_A + 2v_B = 0 \qquad v_B = -0.5v_A$$

Potential Energy: Datum is set at fixed pulley C. When blocks A and B (pulley D) are at their initial position, their centers of gravity are located at s_A and s_B. Their initial gravitational potential energies are $-60s_A$, $-20s_B$, and $-5s_B$. When block B (pulley D) rises 5 ft, block A decends 10 ft. Thus, the final position of blocks A and B (pulley D) are $(s_A + 10)$ ft and $(s_B - 5)$ ft *below* datum. Hence, their respective final gravitational potential energy are $-60(s_A + 10)$, $-20(s_B - 5)$, and $-5(s_B - 5)$. Thus, the initial and final potential energy are

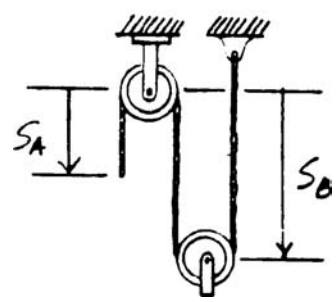

$$V_1 = -60s_A - 20s_B - 5s_B = -60s_A - 25s_B$$

$$V_2 = -60(s_A + 10) - 20(s_B - 5) - 5(s_B - 5) = -60s_A - 25s_B - 475$$

Kinetic Energy: The mass moment inertia of the pulley about its mass center is $I_G = \frac{1}{2}\left(\frac{5}{32.2}\right)(0.5^2) = 0.01941\text{ slug}\cdot\text{ft}^2$. Since pulley D rolls without slipping, $\omega_D = \frac{v_B}{r_D} = \frac{v_B}{0.5} = 2v_B = 2(-0.5v_A) = -v_A$. Pulley C rotates about the fixed point hence $\omega_C = \frac{v_A}{r_C} = \frac{v_A}{0.5} = 2v_A$. Since the system is at initially rest, the initial kinectic energy is $T_1 = 0$. The final kinetic energy is given by

$$T_2 = \frac{1}{2}m_A v_A^2 + \frac{1}{2}m_B v_B^2 + \frac{1}{2}m_D v_B^2 + \frac{1}{2}I_G\omega_D^2 + \frac{1}{2}I_G\omega_C^2$$

$$= \frac{1}{2}\left(\frac{60}{32.2}\right)v_A^2 + \frac{1}{2}\left(\frac{20}{32.2}\right)(-0.5v_A)^2 + \frac{1}{2}\left(\frac{5}{32.2}\right)(-0.5v_A)^2$$

$$+ \frac{1}{2}(0.01941)(-v_A)^2 + \frac{1}{2}(0.01941)(2v_A)^2$$

$$= 1.0773v_A^2$$

Conservation of Energy: Applying Eq. 18–19, we have

$$T_1 + V_1 = T_2 + V_2$$

$$0 + (-60s_A - 25s_B) = 1.0773v_A^2 + (-60s_A - 25s_B - 475)$$

$$v_4 = 21.0\text{ ft/s} \qquad \textbf{Ans.}$$

© 2010 Pearson Education, Inc., Upper Saddle River, NJ. All rights reserved. This material is protected under all copyright laws as they currently exist. No portion of this material may be reproduced, in any form or by any means, without permission in writing from the publisher.

•18–45. The system consists of a 20-lb disk A, 4-lb slender rod BC, and a 1-lb smooth collar C. If the disk rolls without slipping, determine the velocity of the collar at the instant the rod becomes horizontal, i.e., $\theta = 0°$. The system is released from rest when $\theta = 45°$.

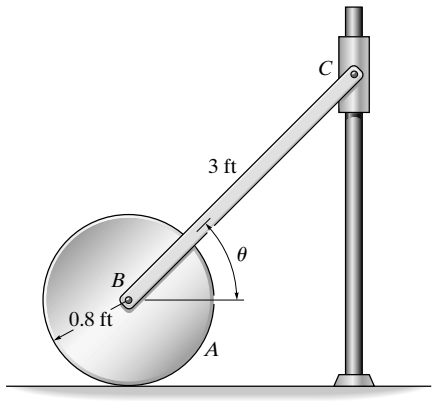

$$T_1 + V_1 = T_2 + V_2$$

$$0 + 4(1.5 \sin 45°) + 1(3 \sin 45°) = \frac{1}{2}\left[\frac{1}{3}\left(\frac{4}{32.2}\right)(3)^2\right]\left(\frac{v_C}{3}\right)^2 + \frac{1}{2}\left(\frac{1}{32.2}\right)(v_C)^2 + 0$$

$$v_C = 13.3 \text{ ft/s} \qquad \textbf{Ans.}$$

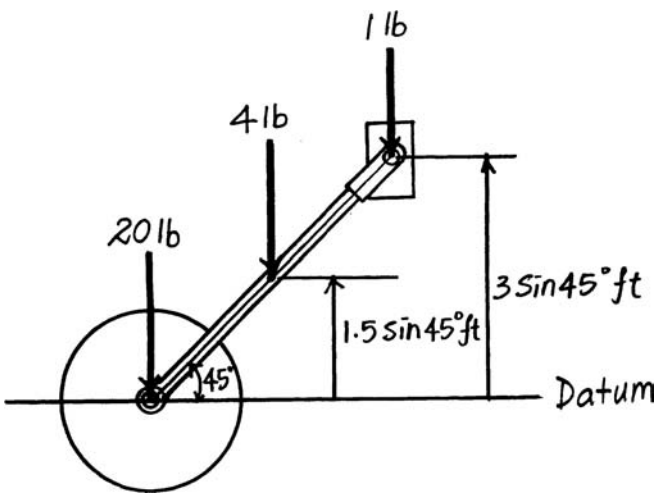

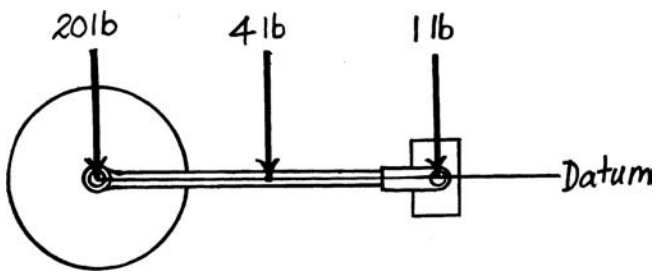

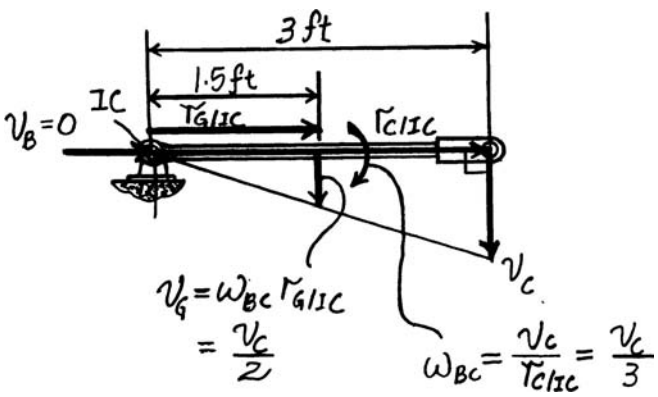

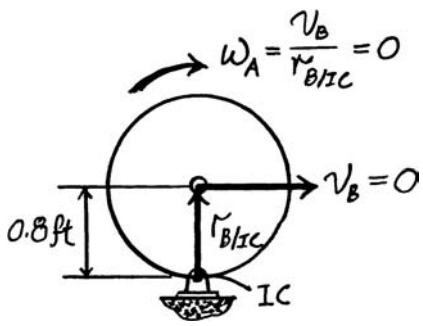

© 2010 Pearson Education, Inc., Upper Saddle River, NJ. All rights reserved. This material is protected under all copyright laws as they currently exist. No portion of this material may be reproduced, in any form or by any means, without permission in writing from the publisher.

18–46. The system consists of a 20-lb disk A, 4-lb slender rod BC, and a 1-lb smooth collar C. If the disk rolls without slipping, determine the velocity of the collar at the instant $\theta = 30°$. The system is released from rest when $\theta = 45°$.

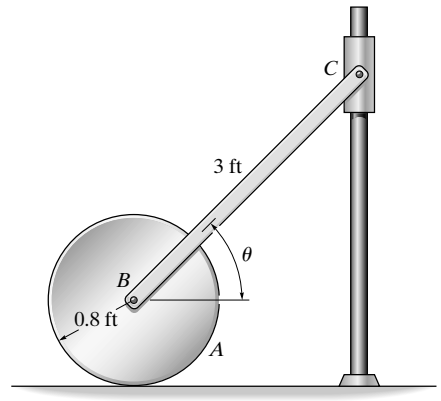

$$v_B = 0.8\omega_A$$

$$\omega_{BC} = \frac{v_B}{1.5} = \frac{v_C}{2.598} = \frac{v_G}{1.5}$$

Thus,

$$v_B = v_G = 1.5\omega_{BC} \qquad v_C = 2.598\omega_{BC}$$

$$\omega_A = 1.875\,\omega_{BC}$$

$$T_1 + V_1 = T_2 + V_2$$

$$0 + 4(1.5\sin 45°) + 1(3\sin 45°)$$

$$= \frac{1}{2}\left[\frac{1}{2}\left(\frac{20}{32.2}\right)(0.8)^2\right](1.875\omega_{BC})^2 + \frac{1}{2}\left(\frac{20}{32.2}\right)(1.5\,\omega_{BC})^2$$

$$+\frac{1}{2}\left[\frac{1}{12}\left(\frac{4}{32.2}\right)(3)^2\right]\omega_{BC}^2 + \frac{1}{2}\left(\frac{4}{32.2}\right)(1.5\omega_{BC})^2$$

$$+\frac{1}{2}\left(\frac{1}{32.2}\right)(2.598\omega_{BC})^2 + 4(1.5\sin 30°) + 1(3\sin 30°)$$

$$\omega_{BC} = 1.180 \text{ rad/s}$$

Thus,

$$v_C = 2.598(1.180) = 3.07 \text{ ft/s} \qquad \textbf{Ans.}$$

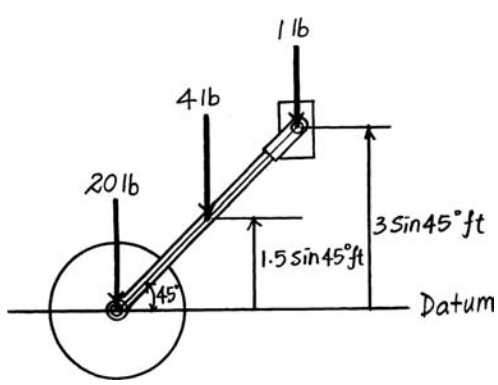

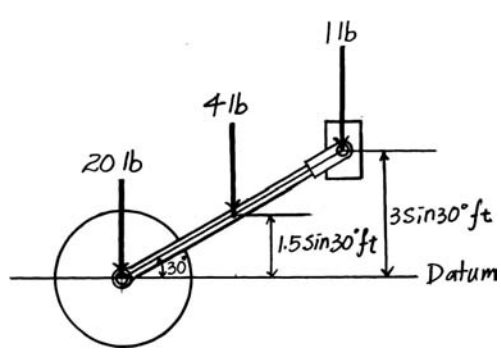

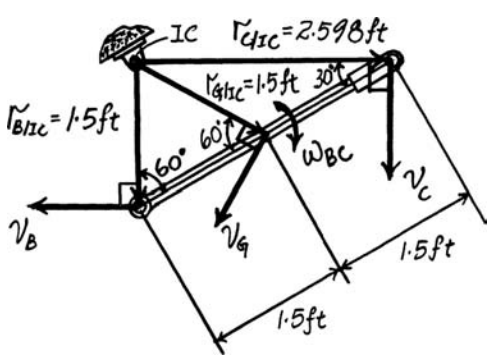

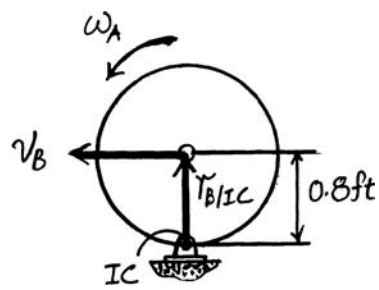

© 2010 Pearson Education, Inc., Upper Saddle River, NJ. All rights reserved. This material is protected under all copyright laws as they currently exist. No portion of this material may be reproduced, in any form or by any means, without permission in writing from the publisher.

18–47. The pendulum consists of a 2-lb rod BA and a 6-lb disk. The spring is stretched 0.3 ft when the rod is horizontal as shown. If the pendulum is released from rest and rotates about point D, determine its angular velocity at the instant the rod becomes vertical. The roller at C allows the spring to remain vertical as the rod falls.

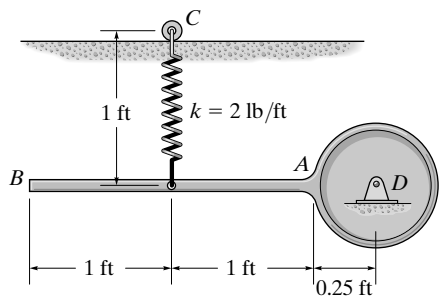

Potential Energy: Datum is set at point O. When rod AB is at vertical position, its center of gravity is located 1.25 ft *below* the datum. Its gravitational potential energy at this position is $-2(1.25)$ ft · lb. The initial and final stretch of the spring are 0.3 ft and $(1.25 + 0.3)$ ft $= 1.55$ ft, respectively. Hence, the initial and final elastic potential energy are $\frac{1}{2}(2)(0.3^2) = 0.09$ lb · ft and $\frac{1}{2}(2)(1.55^2) = 2.4025$ lb · ft. Thus,

$$V_1 = 0.09 \text{ lb} \cdot \text{ft} \qquad V_2 = 2.4025 + [-2(1.25)] = -0.0975 \text{ lb} \cdot \text{ft}$$

Kinetic Energy: The mass moment inertia for rod AB and the disk about point O are

$$(I_{AB})_O = \frac{1}{12}\left(\frac{2}{32.2}\right)(2^2) + \left(\frac{2}{32.2}\right)(1.25^2) = 0.1178 \text{ slug} \cdot \text{ft}^2$$

and

$$(I_D)_O = \frac{1}{2}\left(\frac{6}{32.2}\right)(0.25^2) = 0.005823 \text{ slug} \cdot \text{ft}^2$$

Since rod AB and the disk are initially at rest, the initial kinetic energy is $T_1 = 0$. The final kinetic energy is given by

$$T_2 = \frac{1}{2}(I_{AB})_O\,\omega^2 + \frac{1}{2}(I_D)_O\,\omega^2$$

$$= \frac{1}{2}(0.1178)\,\omega^2 + \frac{1}{2}(0.005823)\,\omega^2$$

$$= 0.06179\,\omega^2$$

Conservation of Energy: Applying Eq. 18–19, we have

$$T_1 + V_1 = T_2 + V_2$$

$$0 + 0.09 = 0.06179\,\omega^2 + (-0.0975)$$

$$\omega = 1.74 \text{ rad/s} \qquad \textbf{Ans.}$$

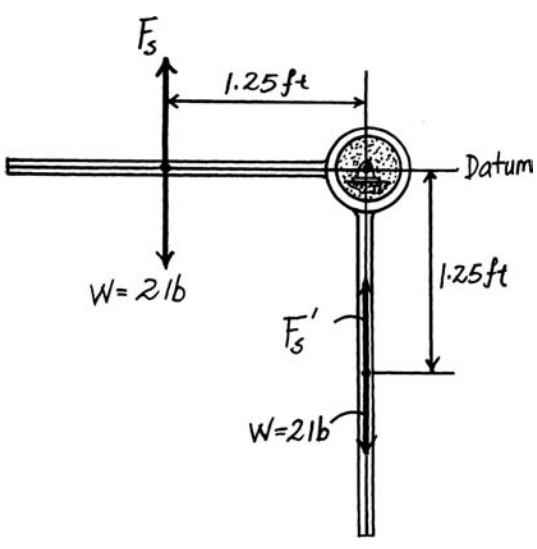

© 2010 Pearson Education, Inc., Upper Saddle River, NJ. All rights reserved. This material is protected under all copyright laws as they currently exist. No portion of this material may be reproduced, in any form or by any means, without permission in writing from the publisher.

***18–48.** The uniform garage door has a mass of 150 kg and is guided along smooth tracks at its ends. Lifting is done using the two springs, each of which is attached to the anchor bracket at A and to the counterbalance shaft at B and C. As the door is raised, the springs begin to unwind from the shaft, thereby assisting the lift. If each spring provides a torsional moment of $M = (0.7\theta)\ \mathrm{N \cdot m}$, where θ is in radians, determine the angle θ_0 at which both the left-wound and right-wound spring should be attached so that the door is completely balanced by the springs, i.e., when the door is in the vertical position and is given a slight force upwards, the springs will lift the door along the side tracks to the horizontal plane with no final angular velocity. *Note:* The elastic potential energy of a torsional spring is $V_e = \frac{1}{2}k\theta^2$, where $M = k\theta$ and in this case $k = 0.7\ \mathrm{N \cdot m/rad}$.

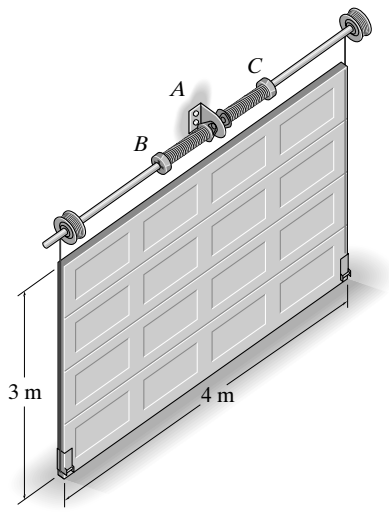

Datum at initial position.

$$T_1 + V_1 = T_2 + V_2$$

$$0 + 2\left[\frac{1}{2}(0.7)\theta_0^2\right] + 0 = 0 + 150(9.81)(1.5)$$

$$\theta_0 = 56.15\ \mathrm{rad} = 8.94\ \mathrm{rev.}$$ **Ans.**

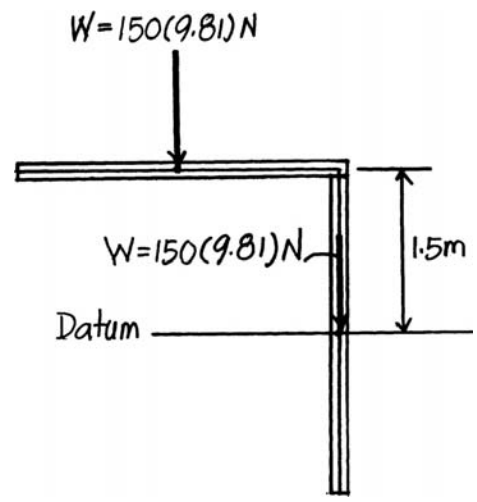

© 2010 Pearson Education, Inc., Upper Saddle River, NJ. All rights reserved. This material is protected under all copyright laws as they currently exist. No portion of this material may be reproduced, in any form or by any means, without permission in writing from the publisher.

•18–49. The garage door *CD* has a mass of 50 kg and can be treated as a thin plate. Determine the required unstretched length of each of the two side springs when the door is in the open position, so that when the door falls freely from the open position it comes to rest when it reaches the fully closed position, i.e., when *AC* rotates 180°. Each of the two side springs has a stiffness of $k = 350$ N/m. Neglect the mass of the side bars *AC*.

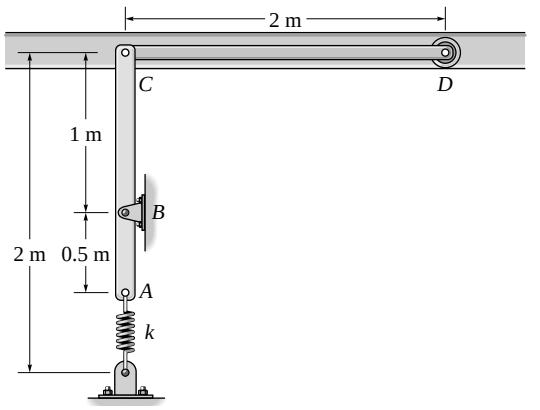

$$T_1 + V_1 = T_2 + V_2$$

$$0 + 2\left[\frac{1}{2}(350)(x_1)^2\right] = 0 + 2\left[\frac{1}{2}(350)(x_1 + 1)^2\right] - 50(9.81)(1)$$

$$x_1 = 0.201 \text{ m}$$

Thus,

$$l_0 = 0.5 \text{ m} - 0.201 \text{ m} = 299 \text{ mm}$$ **Ans.**

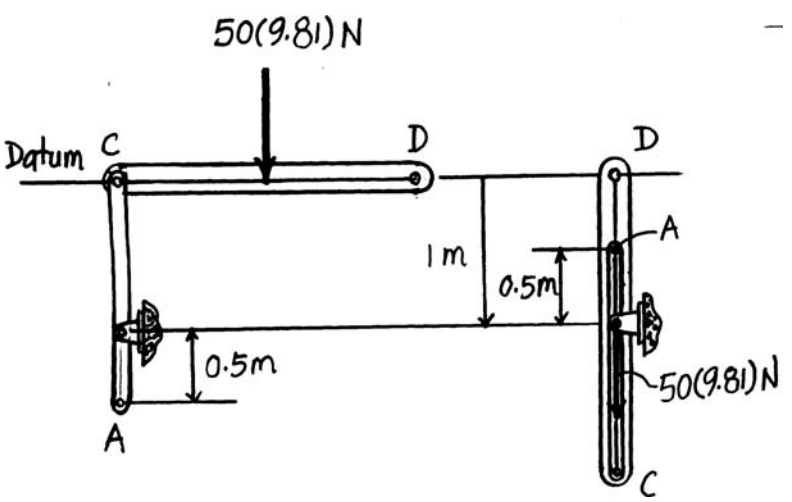

© 2010 Pearson Education, Inc., Upper Saddle River, NJ. All rights reserved. This material is protected under all copyright laws as they currently exist. No portion of this material may be reproduced, in any form or by any means, without permission in writing from the publisher.

18–50. The uniform rectangular door panel has a mass of 25 kg and is held in equilibrium above the horizontal at the position $\theta = 60°$ by rod BC. Determine the required stiffness of the torsional spring at A, so that the door's angular velocity becomes zero when the door reaches the closed position ($\theta = 0°$) once the supporting rod BC is removed. The spring is undeformed when $\theta = 60°$.

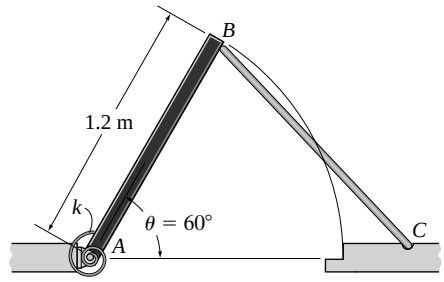

Potential Energy: With reference to the datum in Fig. *a*, the gravitational potential energy of the panel at positions (1) and (2) is

$$(V_g)_1 = W(y_G)_1 = 25(9.81)(0.6 \sin 60°) = 127.44 \text{ J}$$

$$(V_g)_2 = W(y_G)_2 = 25(9.81)(0) = 0$$

Since the spring is initially untwisted, $(V_e)_1 = 0$. The elastic potential energy of the spring when $\theta = 60° = \frac{\pi}{3}$ rad is

$$(V_e)_2 = \frac{1}{2}k\theta^2 = \frac{1}{2}(k)\left(\frac{\pi}{3}\right)^2 = \frac{\pi^2}{18}k$$

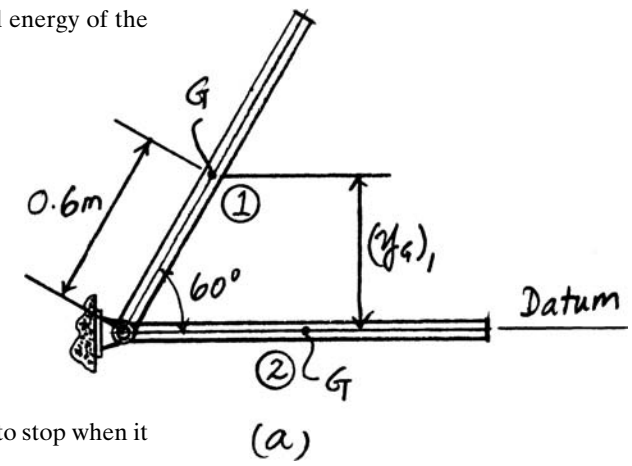

Thus, the potential energy of the panel is

$$V_1 = (V_g)_1 + (V_e)_1 = 127.44 + 0 = 127.44 \text{ J}$$

$$V_2 = (V_g)_2 + (V_e)_2 = 0 + \frac{\pi^2}{18}k = \frac{\pi^2}{18}k$$

Kinetic Energy. Since the rod is at rest at position (1) and is required to stop when it is at position (2), $T_1 = T_2 = 0$.

Conservation of Energy.

$$T_1 + V_1 = T_2 + V_2$$

$$0 + 127.44 = 0 + \frac{\pi^2}{18}k$$

$$k = 232 \text{ N} \cdot \text{m / rad}$$ **Ans.**

© 2010 Pearson Education, Inc., Upper Saddle River, NJ. All rights reserved. This material is protected under all copyright laws as they currently exist. No portion of this material may be reproduced, in any form or by any means, without permission in writing from the publisher.

18–51. The 30 kg pendulum has its mass center at G and a radius of gyration about point G of $k_G = 300$ mm. If it is released from rest when $\theta = 0°$, determine its angular velocity at the instant $\theta = 90°$. Spring AB has a stiffness of $k = 300$ N/m and is unstretched when $\theta = 0°$.

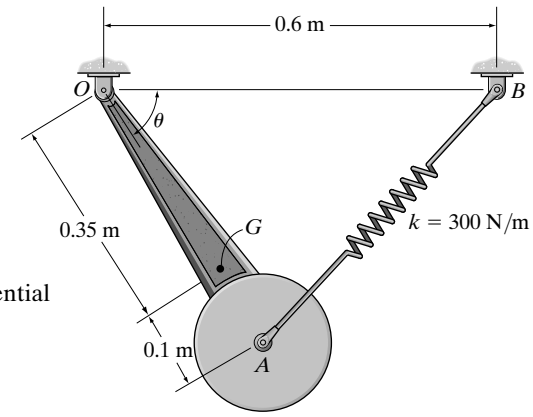

Potential Energy: With reference to the datum in Fig. *a*, the gravitational potential energy of the pendulum at positions (1) and (2) is

$$\left(V_g\right)_1 = W(y_G)_1 = 30(9.81)(0) = 0$$

$$\left(V_g\right)_2 = -W(y_G)_2 = -30(9.81)(0.35) = -103.005 \text{ J}$$

Since the spring is unstretched initially, $(V_e)_1 = 0$. When $\theta = 90°$, the spring stretches $s = AB - A'B = \sqrt{0.45^2 + 0.6^2} - 0.15 = 0.6$ m. Thus,

$$(V_e)_2 = \frac{1}{2}ks^2 = \frac{1}{2}(300)\left(0.6^2\right) = 54 \text{ J}$$

and

$$V_1 = \left(V_g\right)_1 + (V_e)_1 = 0$$

$$V_2 = \left(V_g\right)_2 + (V_e)_2 = -103.005 + 54 = -49.005 \text{ J}$$

Kinetic Energy: Since the pendulum rotates about a fixed axis, $v_G = \omega r_G = \omega(0.35)$. The mass moment of inertia of the pendulum about its mass center is $I_G = mk_G{}^2 = 30\left(0.3^2\right) = 2.7 \text{ kg}\cdot\text{m}^2$. Thus, the kinetic energy of the pendulum is

$$T = \frac{1}{2}mv_G{}^2 + \frac{1}{2}I_G\omega^2$$

$$= \frac{1}{2}(30)\left[\omega(0.35)\right]^2 + \frac{1}{2}(2.7)\omega^2 = 3.1875\omega^2$$

Conservation of Energy:

$$T_1 + V_1 = T_2 + V_2$$

$$0 + 0 = 3.1875\omega^2 - 49.005$$

$$\omega = 3.92 \text{ rad/s}$$ **Ans.**

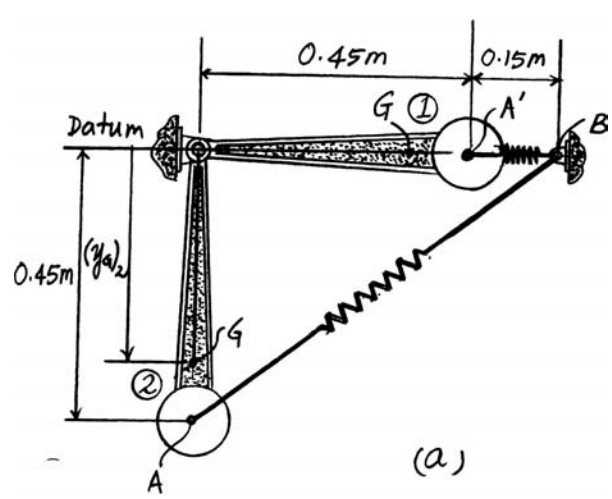

© 2010 Pearson Education, Inc., Upper Saddle River, NJ. All rights reserved. This material is protected under all copyright laws as they currently exist. No portion of this material may be reproduced, in any form or by any means, without permission in writing from the publisher.

***18–52.** The 50-lb square plate is pinned at corner A and attached to a spring having a stiffness of $k = 20$ lb/ft. If the plate is released from rest when $\theta = 0°$, determine its angular velocity when $\theta = 90°$. The spring is unstretched when $\theta = 0°$.

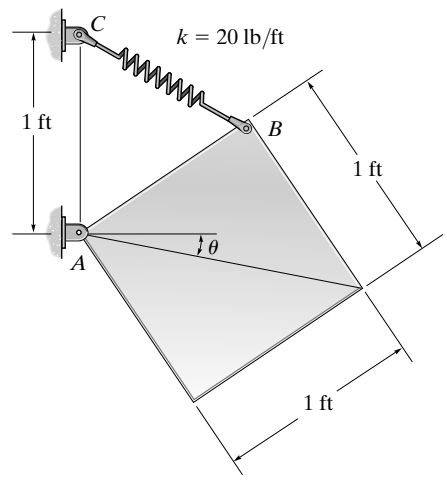

Potential Energy: With reference to the datum shown in Fig. a, the gravitational potential energy of the plate at position (1) and (2) is

$$\left(V_g\right)_1 = W(y_G)_1 = 50(0) = 0$$

$$\left(V_g\right)_2 = -W(y_G)_2 = -50(1\cos 45°) = -35.36 \text{ lb}\cdot\text{ft}$$

Since the spring is initially unstretched, $(V_e)_1 = 0$. When the plate is at position (2), the spring stetches $s = BC - B'C = 2[1\cos 22.5°] - 2(1\cos 67.5°) = 1.082$ ft. Therefore,

$$(V_e)_2 = \frac{1}{2}ks^2 = \frac{1}{2}(20)\left(1.082^2\right) = 11.72 \text{ lb}\cdot\text{ft}$$

Thus,

$$V_1 = \left(V_g\right)_1 + \left(V_e\right)_1 = 0 + 0 = 0$$

$$V_2 = \left(V_g\right)_2 + (V_e)_2 = -35.36 + 11.72 = -23.64 \text{ ft}\cdot\text{lb}$$

Kinetic Energy: Since the plate rotates about a fixed axis passing through point A, its kinetic energy can be determined from $T = \frac{1}{2}I_A\,\omega^2$, where

$$I_A = \frac{1}{12}\left(\frac{50}{32.2}\right)\left(1^2 + 1^2\right) + \frac{50}{32.2}(1\cos 45°)^2 = 1.035 \text{ slug}\cdot\text{ft}^2$$

Thus,

$$T = \frac{1}{2}I_A\,\omega^2 = \frac{1}{2}(1.035)\omega^2 = 0.5176\omega^2$$

Since the plate is initially at rest $T_1 = 0$.

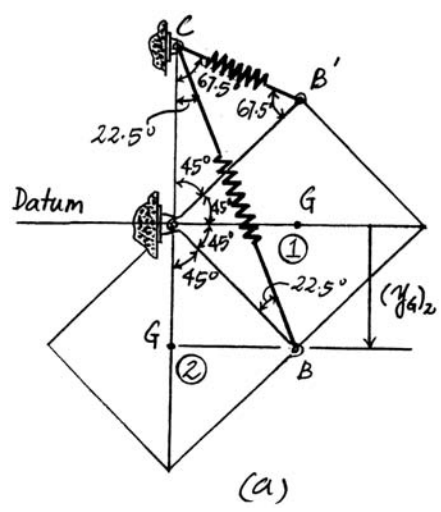

Conservation of Energy:

$$T_1 + V_1 = T_2 + V_2$$

$$0 + 0 = 0.5176\omega^2 - 23.64$$

$$\omega = 6.76 \text{ rad/s}$$ **Ans.**

© 2010 Pearson Education, Inc., Upper Saddle River, NJ. All rights reserved. This material is protected under all copyright laws as they currently exist. No portion of this material may be reproduced, in any form or by any means, without permission in writing from the publisher.

•18–53. A spring having a stiffness of $k = 300$ N/m is attached to the end of the 15-kg rod, and it is unstretched when $\theta = 0°$. If the rod is released from rest when $\theta = 0°$, determine its angular velocity at the instant $\theta = 30°$. The motion is in the vertical plane.

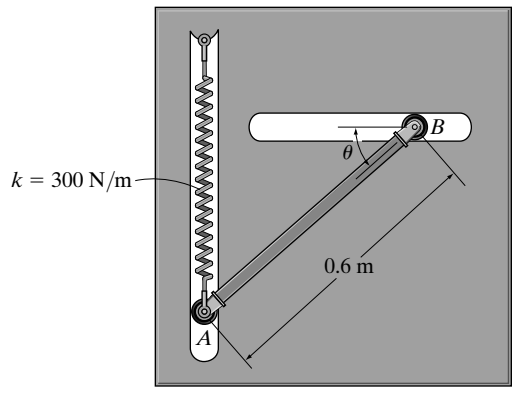

Potential Energy: With reference to the datum in Fig. *a*, the gravitational potential energy of the rod at positions (1) and (2) is

$$\left(V_g\right)_1 = W(y_G)_1 = 15(9.81)(0) = 0$$

$$\left(V_g\right)_2 = -W(y_G)_2 = -15(9.81)(0.3 \sin 30°) = -22.0725 \text{ J}$$

Since the spring is initially unstretched, $(V_e)_1 = 0$. When $\theta = 30°$, the stretch of the spring is $s_P = 0.6 \sin 30° = 0.3$ m. Thus, the final elastic potential energy of the spring is

$$\left(V_e\right)_2 = \frac{1}{2} k s_P{}^2 = \frac{1}{2}(300)\left(0.3^2\right) = 13.5 \text{ J}$$

Thus,

$$V_1 = (V_g)_1 + (V_e)_1 = 0 + 0 = 0$$

$$V_2 = (V_g)_2 + (V_e)_2 = -22.0725 + 13.5 = -8.5725 \text{ J}$$

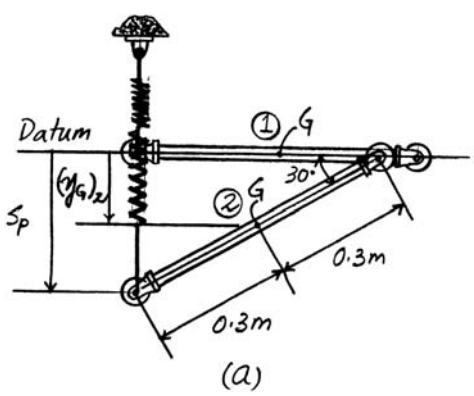

Kinetic Energy: Since the rod is initially at rest, $T_1 = 0$. From the geometry shown in Fig. *b*, $r_{G/IC} = 0.3$ m. Thus, $(V_G)_2 = \omega_2 r_{G/IC} = \omega_2\,(0.3)$. The mass moment of inertia of the rod about its mass center is $I_G = \frac{1}{12} ml^2 = \frac{1}{12}(15)\left(0.6^2\right) = 0.45 \text{ kg} \cdot \text{m}^2$. Thus, the final kinetic energy of the rod is

$$T_2 = \frac{1}{2} m(v_G)_2{}^2 + \frac{1}{2} I_G \omega_2{}^2$$

$$= \frac{1}{2}(15)\left[\omega_2\left(0.3\right)\right]^2 + \frac{1}{2}\left(0.45\right)\omega_2{}^2$$

$$= 0.9\omega_2{}^2$$

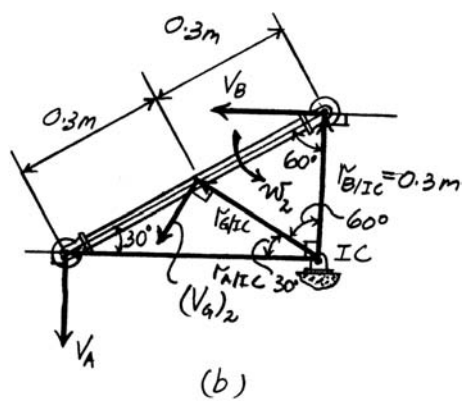

Conservation of Energy:

$$T_1 + V_1 = T_2 + V_2$$

$$0 + 0 = 0.9\omega_2{}^2 - 8.5725$$

$$\omega_2 = 3.09 \text{ rad/s}$$ **Ans.**

© 2010 Pearson Education, Inc., Upper Saddle River, NJ. All rights reserved. This material is protected under all copyright laws as they currently exist. No portion of this material may be reproduced, in any form or by any means, without permission in writing from the publisher.

18–54. If the 6-kg rod is released from rest at $\theta = 30°$, determine the angular velocity of the rod at the instant $\theta = 0°$. The attached spring has a stiffness of $k = 600$ N/m, with an unstretched length of 300 mm.

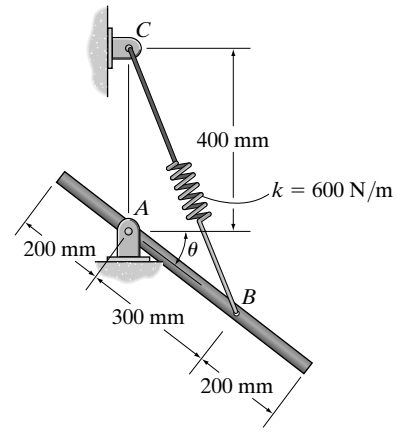

Potential Energy: With reference to the datum in Fig. *a*, the gravitational potential energy of the rod at positions (1) and (2) is

$$\left(V_g\right)_1 = -W(y_G)_1 = -6(9.81)(0.15 \sin 30°) = -4.4145 \text{ J}$$

$$\left(V_g\right)_2 = W(y_G)_2 = 6(9.81)(0) = 0$$

The stretch of the spring when the rod is in positions (1) and (2) is $s_1 = B'C - l_0 = \sqrt{0.3^2 + 0.4^2 - 2(0.3)(0.4)\cos 120°} - 0.3 = 0.3083$ m and $s_2 = BC - l_0 = \sqrt{0.3^2 + 0.4^2} - 0.3 = 0.2$ m. Thus, the initial and final elastic potential energy of the spring is

$$\left(V_e\right)_1 = \frac{1}{2}ks_1{}^2 = \frac{1}{2}(600)\left(0.3083^2\right) = 28.510 \text{ J}$$

$$\left(V_e\right)_2 = \frac{1}{2}ks_2{}^2 = \frac{1}{2}(600)\left(0.2^2\right) = 12 \text{ J}$$

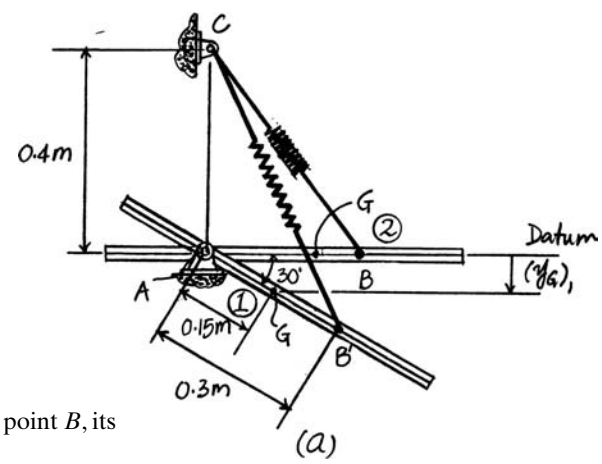

Thus,

$$V_1 = (V_g)_1 + (V_e)_1 = -4.4145 + 28.510 = 24.096 \text{ J}$$

$$V_2 = (V_g)_2 + (V_e)_2 = 0 + 12 = 12 \text{ J}$$

Kinetic Energy: Since the rod rotates about a fixed axis passing through point B, its kinetic energy can be determined from $T = \frac{1}{2}I_B\omega^2$, where

$$I_B = \frac{1}{12}(6)\left(0.7^2\right) + 6\left(0.15^2\right) = 0.38 \text{ kg}\cdot\text{m}^2$$

Thus,

$$T = \frac{1}{2}I_B\omega^2 = \frac{1}{2}(0.38)\omega^2 = 0.19\omega^2$$

Since the rod is initially at rest, $T_1 = 0$.

Conservation of Energy:

$$T_1 + V_1 = T_2 + V_2$$

$$0 + 24.096 = 0.19\omega^2 + 12$$

$$\omega = 7.98 \text{ rad/s} \qquad \textbf{Ans.}$$

© 2010 Pearson Education, Inc., Upper Saddle River, NJ. All rights reserved. This material is protected under all copyright laws as they currently exist. No portion of this material may be reproduced, in any form or by any means, without permission in writing from the publisher.

18–55. The 50-kg rectangular door panel is held in the vertical position by rod CB. When the rod is removed, the panel closes due to its own weight. The motion of the panel is controlled by a spring attached to a cable that wraps around the half pulley. To reduce excessive slamming, the door panel's angular velocity is limited to 0.5 rad/s at the instant of closure. Determine the minimum stiffness k of the spring if the spring is unstretched when the panel is in the vertical position. Neglect the half pulley's mass.

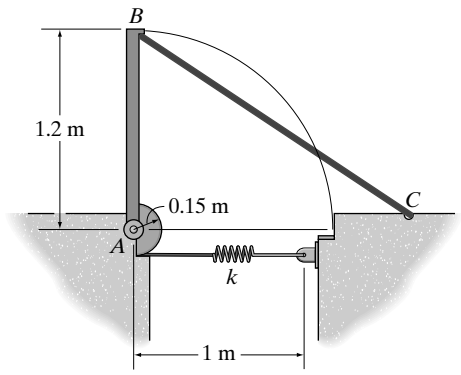

Potential Energy: With reference to the datum in Fig. a, the gravitational potential energy of the door panel at its open and closed positions is

$$\left(V_g\right)_1 = W(y_G)_1 = 50(9.81)(0.6) = 294.3 \text{ J}$$

$$\left(V_g\right)_2 = W(y_G)_2 = 50(9.81)(0) = 0$$

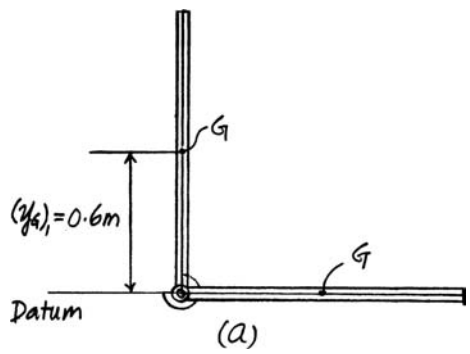

Since the spring is unstretched when the door panel is at the open position, $(V_e)_1 = 0$. When the door is closed, the half pulley rotates through and angle of $\theta = \frac{\pi}{2}$ rad. Thus, the spring stretches $s = r\theta = 0.15\left(\frac{\pi}{2}\right) = 0.075\pi$ m. Then,

$$(V_e)_2 = \frac{1}{2}ks^2 = \frac{1}{2}k(0.075\pi)^2 = 0.0028125\pi^2 k$$

Thus,

$$V_1 = \left(V_g\right)_1 + (V_e)_1 = 294.3 + 0 = 294.3 \text{ J}$$

$$V_2 = \left(V_g\right)_2 + (V_e)_2 = 0 + 0.0028125\pi^2 k = 0.0028125\pi^2 k$$

Kinetic Energy: Since the door panel rotates about a fixed axis passing through point A, its kinetic energy can be determined from $T = \frac{1}{2}I_A\,\omega^2$, where

$$I_A = \frac{1}{12}(50)\left(1.2^2\right) + 50\left(0.6^2\right) = 24 \text{ kg}\cdot\text{m}^2$$

Thus,

$$T = \frac{1}{2}I_A\omega^2 = \frac{1}{2}(24)\omega^2 = 12\omega^2$$

Since the door panel is at rest in the open position and required to have an angular velocity of $\omega = 0.5$ rad/s at closure, then

$$T_1 = 0 \qquad\qquad T_2 = 12\left(0.5^2\right) = 3 \text{ J}$$

Conservation of Energy:

$$T_1 + V_1 = T_2 + V_2$$

$$0 + 294.3 = 3 + 0.0028125\pi^2 k$$

$$k = 10494.17 \text{ N/m} = 10.5 \text{ kN/m} \qquad \textbf{Ans.}$$

© 2010 Pearson Education, Inc., Upper Saddle River, NJ. All rights reserved. This material is protected under all copyright laws as they currently exist. No portion of this material may be reproduced, in any form or by any means, without permission in writing from the publisher.

***18–56.** Rods AB and BC have weights of 15 lb and 30 lb, respectively. Collar C, which slides freely along the smooth vertical guide, has a weight of 5 lb. If the system is released from rest when $\theta = 0°$, determine the angular velocity of the rods when $\theta = 90°$. The attached spring is unstretched when $\theta = 0°$.

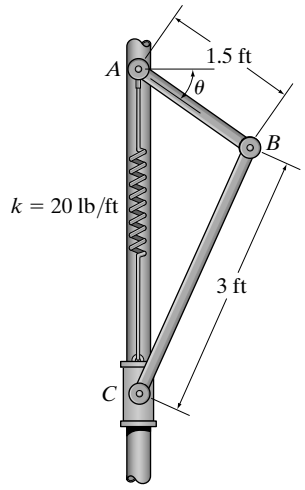

Potential Energy: From the geometry in Fig. a, $\theta = \sin^{-1}\left(\frac{1.5}{3}\right) = 30°$. With reference to the datum, the initial and final gravitational potential energy of the system is

$$\left(V_g\right)_1 = W_{AB}\,(y_{G1})_1 - W_{BC}\,(y_{G2})_1 - W_C\,(y_{G3})_1$$
$$= 15(0) - 30(1.5\cos 30°) - 5(3\cos 30°)$$
$$= -51.96\ \text{ft}\cdot\text{lb}$$
$$\left(V_g\right)_2 = -W_{AB}\,(y_{G1})_2 - W_{BC}\,(y_{G2})_2 - W_C\,(y_{G3})_2$$
$$= -15(0.75) - 30(3) - 5(4.5)$$
$$= -123.75\ \text{ft}\cdot\text{lb}$$

Since the spring is initially unstretched, $(V_e)_1 = 0$. When $\theta = 90°$, the spring stretches $s = 4.5 - 3\cos 30° = 1.902$ ft. Thus,

$$(V_e)_2 = \frac{1}{2}ks^2 = \frac{1}{2}(20)\left(1.902^2\right) = 36.17\ \text{ft}\cdot\text{lb}$$

And,

$$V_1 = \left(V_g\right)_1 + (V_e)_1 = -51.96 + 0 = -51.96\ \text{ft}\cdot\text{lb}$$
$$V_2 = \left(V_g\right)_2 + (V_e)_2 = -123.75 + 36.17 = -87.58\ \text{ft}\cdot\text{lb}$$

Kinetic Energy: Since the system is initially at rest $T_1 = 0$. Referring to Fig. b, $(v_B)_2 = (\omega_{AB})_2\, r_B = (\omega_{AB})_2(1.5)$. Then $(\omega_{BC})_2 = \frac{(v_B)_2}{r_{B/IC}} = \frac{(\omega_{AB})_2(1.5)}{3} = 0.5(\omega_{AB})_2$.

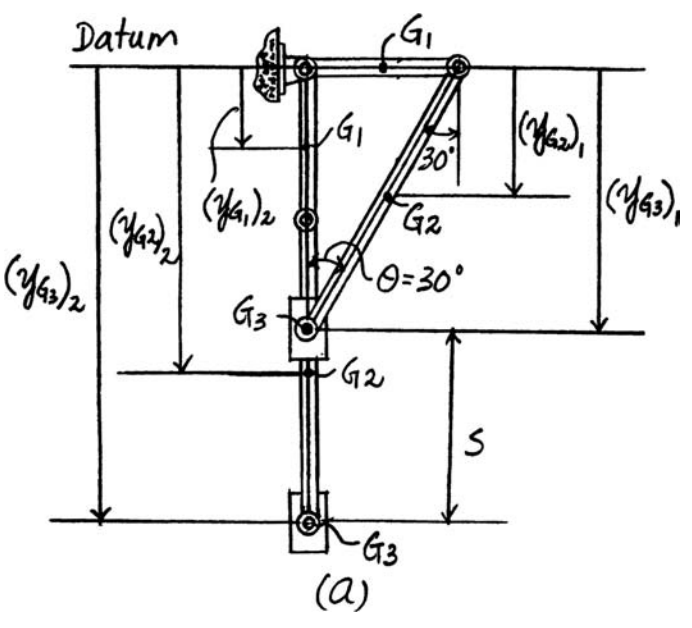

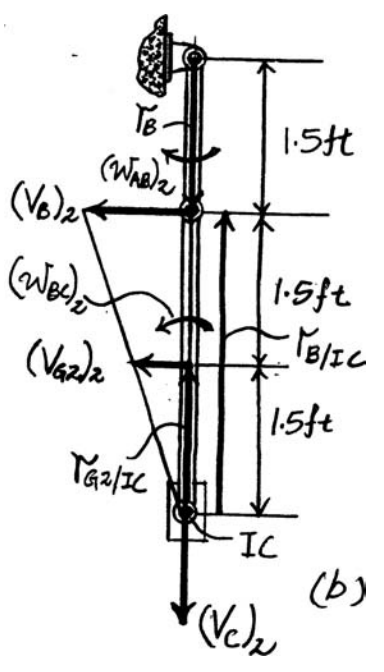

© 2010 Pearson Education, Inc., Upper Saddle River, NJ. All rights reserved. This material is protected under all copyright laws as they currently exist. No portion of this material may be reproduced, in any form or by any means, without permission in writing from the publisher.

***18–56. Continued**

Subsequently, $(v_{G2})_2 = (\omega_{BC})_2\, r_{G2/IC} = 0.5(\omega_{AB})_2(1.5) = 0.75(\omega_{AB})_2$. Since point C is located at the IC, $v_C = 0$. The mass moments of inertia of AB about point A and BC about its mass center are $(I_{AB})_A = \frac{1}{3}ml^2 = \frac{1}{3}\left(\frac{15}{32.2}\right)\left(1.5^2\right) = 0.3494\ \text{slug/ft}^2$ and $(I_{BC})_{G2} = \frac{1}{12}ml^2 = \frac{1}{12}\left(\frac{30}{32.2}\right)\left(3^2\right) = 0.6988\ \text{slug/ft}^2$. Thus, the final kinetic energy of the system is

$$T_2 = T_{AB} + T_{BC} + T_C$$

$$= \frac{1}{2}(I_{AB})_A(\omega_{AB})_2{}^2 + \left[\frac{1}{2}m_{BC}(v_{G2})^2 + \frac{1}{2}(I_{BC})_{G2}(\omega_{BC})_2{}^2\right] + \frac{1}{2}m_C v_C{}^2$$

$$= \frac{1}{2}(0.3494)(\omega_{AB})_2{}^2 + \left[\frac{1}{2}\left(\frac{30}{32.2}\right)\left[0.75(\omega_{AB})_2\right]^2 + \frac{1}{2}(0.6988)\left[0.5(\omega_{AB})_2\right]^2\right] + 0$$

$$= 0.5241(\omega_{AB})_2{}^2$$

Conservation of Energy:

$$T_1 + V_1 = T_2 + V_2$$

$$0 - 51.96 = 0.5241(\omega_{AB})_2{}^2 - 87.58$$

$$(\omega_{AB})_2 = 8.244\ \text{rad/s} = 8.24\ \text{rad/s} \qquad \textbf{Ans.}$$

Thus,

$$(\omega_{BC})_2 = 0.5(8.244) = 4.12\ \text{rad/s} \qquad \textbf{Ans.}$$

•18–57. Determine the stiffness k of the torsional spring at A, so that if the bars are released from rest when $\theta = 0°$, bar AB has an angular velocity of 0.5 rad/s at the closed position, $\theta = 90°$. The spring is uncoiled when $\theta = 0°$. The bars have a mass per unit length of 10 kg/m.

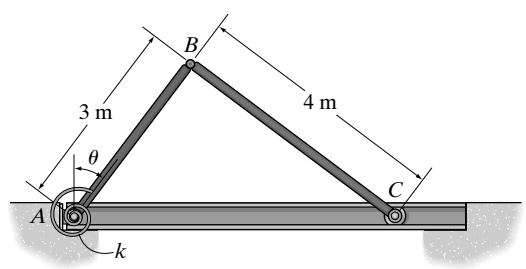

Potential Energy: With reference to the datum in Fig. a, the gravitational potential energy of the system at its open and closed positions is

$$(V_g)_1 = W_{AB}(y_{G1})_1 + W_{BC}(y_{G2})_1$$

$$= 10(3)(9.81)(1.5) + 10(4)(9.81)(1.5) = 1030.5\ \text{J}$$

$$(V_g)_2 = W_{AB}(y_{G1})_2 + W_{BC}(y_{G2})_2$$

$$= 10(3)(9.81)(0) + 10(4)(9.81)(0) = 0$$

© 2010 Pearson Education, Inc., Upper Saddle River, NJ. All rights reserved. This material is protected under all copyright laws as they currently exist. No portion of this material may be reproduced, in any form or by any means, without permission in writing from the publisher.

•18–57. Continued

Since the spring is initially uncoiled, $(V_e)_1 = 0$. When the panels are in the closed position, the coiled angle of the spring is $\theta = \frac{\pi}{2}$ rad. Thus,

$$(V_e)_2 = \frac{1}{2}k\theta^2 = \frac{1}{2}k\left(\frac{\pi}{2}\right)^2 = \frac{\pi^2}{8}k$$

And so,

$$V_1 = (V_g)_1 + (V_e)_1 = 1030.5 + 0 = 1030.5 \text{ J}$$

$$V_2 = (V_g)_2 + (V_e)_2 = 0 + \frac{\pi^2}{8}k = \frac{\pi^2}{8}k$$

Kinetic Energy: Since the system is initially at rest, $T_1 = 0$. Referring to Fig. *b*, $(v_B)_2 = (\omega_{AB})_2 r_B = 0.5(3) = 1.5$ m/s. Then, $(\omega_{BC})_2 = \frac{(v_B)_2}{r_{B/IC}} = \frac{1.5}{4} = 0.375$ rad/s. Subsequently, $(v_G)_2 = (\omega_{BC})_2 r_{G2/IC} = 0.375(2) = 0.75$ m/s. The mass moments of inertia of AB about point A and BC about its mass center are

$$(I_{AB})_A = \frac{1}{3}ml^2 = \frac{1}{3}[10(3)](3^2) = 90 \text{ kg}\cdot\text{m}^2$$

and

$$(I_{BC})_{G2} = \frac{1}{12}ml^2 = \frac{1}{12}[10(4)](4^2) = 53.33 \text{ kg}\cdot\text{m}^2$$

Thus,

$$T_2 = \frac{1}{2}(I_{AB})_A(\omega_{AB})_2{}^2 + \left[\frac{1}{2}m_{BC}(v_{G2})^2 + \frac{1}{2}(I_{BC})_{G2}(\omega_{BC})_2{}^2\right]$$

$$= \frac{1}{2}(90)(0.5^2) + \left[\frac{1}{2}[10(4)](0.75^2) + \frac{1}{2}(53.33)(0.375^2)\right]$$

$$= 26.25 \text{ J}$$

Conservation of Energy:

$$T_1 + V_1 = T_2 + V_2$$

$$0 + 1030.5 = 26.25 + \frac{\pi^2}{8}k$$

$$k = 814 \text{ N}\cdot\text{m/rad}$$ **Ans.**

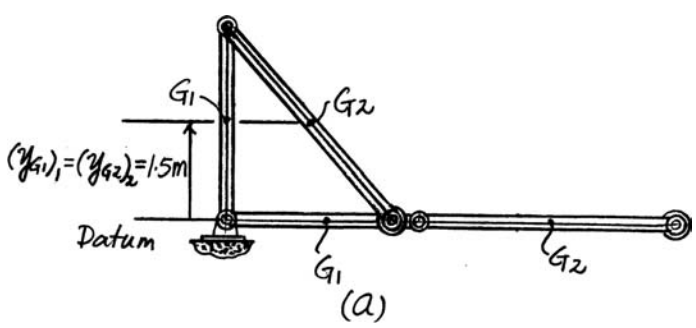

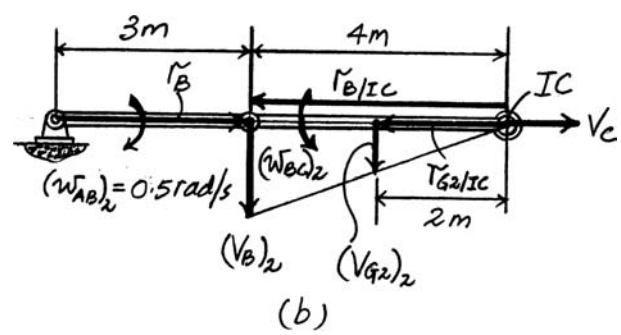

© 2010 Pearson Education, Inc., Upper Saddle River, NJ. All rights reserved. This material is protected under all copyright laws as they currently exist. No portion of this material may be reproduced, in any form or by any means, without permission in writing from the publisher.

18–58. The torsional spring at A has a stiffness of $k = 900\ \text{N}\cdot\text{m/rad}$ and is uncoiled when $\theta = 0°$. Determine the angular velocity of the bars, AB and BC, when $\theta = 0°$, if they are released from rest at the closed position, $\theta = 90°$. The bars have a mass per unit length of 10 kg/m.

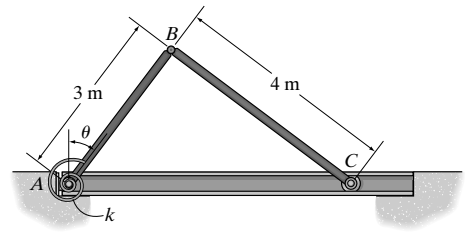

Potential Energy: With reference to the datum in Fig. a, the gravitational potential energy of the system at its open and closed positions is

$$(V_g)_1 = W_{AB}(y_{G1})_1 + W_{BC}(y_{G2})_1$$

$$= 10(3)(9.81)(0) + 10(4)(9.81)(0) = 0$$

$$(V_g)_2 = W_{AB}(y_{G1})_2 + W_{BC}(y_{G2})_2$$

$$= 10(3)(9.81)(1.5) + 10(4)(9.81)(1.5) = 1030.05\ \text{J}$$

When the panel is in the closed position, the coiled angle of the spring is $\theta = \frac{\pi}{2}$ rad.

Thus,

$$(V_e)_1 = \frac{1}{2}k\theta^2 = \frac{1}{2}(900)\left(\frac{\pi}{2}\right)^2 = 112.5\pi^2\ \text{J}$$

The spring is uncoiled when the panel is in the open position ($\theta = 0°$). Thus,

$$(V_e)_2 = 0$$

And so,

$$V_1 = (V_g)_1 + (V_e)_1 = 0 + 112.5\pi^2 = 112.5\pi^2\ \text{J}$$

$$V_2 = (V_g)_2 + (V_e)_2 = 1030.05 + 0 = 1030.05\ \text{J}$$

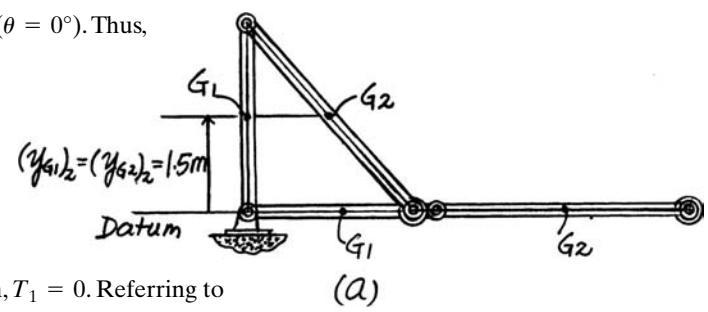

Kinetic Energy: Since the panel is at rest in the closed position, $T_1 = 0$. Referring to Fig. b, the IC for BC is located at infinity. Thus,

$$(\omega_{BC})_2 = 0 \qquad \textbf{Ans.}$$

Then,

$$(v_G)_2 = (v_B)_2 = (\omega_{AB})_2 r_B = (\omega_{AB})_2(3)$$

The mass moments of inertia of AB about point A and BC about its mass center are

$$(I_{AB})_A = \frac{1}{3}ml^2 = \frac{1}{3}[10(3)](3^2) = 90\ \text{kg}\cdot\text{m}^2$$

and

$$(I_{BC})_{G2} = \frac{1}{12}ml^2 = \frac{1}{12}[10(4)](4^2) = 53.33\ \text{kg}\cdot\text{m}^2$$

Thus,

$$T_2 = \frac{1}{2}(I_{AB})_A(\omega_{AB})_2{}^2 + \frac{1}{2}m_{BC}(v_{G2})^2$$

$$= \frac{1}{2}(90)(\omega_{AB})_2{}^2 + \frac{1}{2}[10(4)][(\omega_{AB})_2(3)]^2$$

$$= 225(\omega_{AB})_2{}^2$$

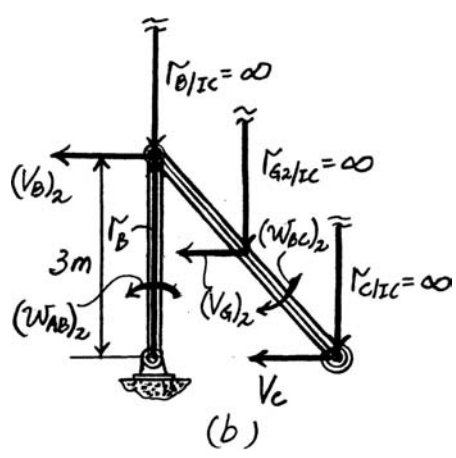

Conservation of Energy:

$$T_1 + V_1 = T_2 + V_2$$

$$0 + 112.5\pi^2 = 225(\omega_{AB})_2{}^2 + 1030.05$$

$$(\omega_{AB})_2 = 0.597\ \text{rad/s} \qquad \textbf{Ans.}$$

© 2010 Pearson Education, Inc., Upper Saddle River, NJ. All rights reserved. This material is protected under all copyright laws as they currently exist. No portion of this material may be reproduced, in any form or by any means, without permission in writing from the publisher.

18–59. The arm and seat of the amusement-park ride have a mass of 1.5 Mg, with the center of mass located at point G_1. The passenger seated at A has a mass of 125 kg, with the center of mass located at G_2 If the arm is raised to a position where $\theta = 150°$ and released from rest, determine the speed of the passenger at the instant $\theta = 0°$. The arm has a radius of gyration of $k_{G1} = 12$ m about its center of mass G_1. Neglect the size of the passenger.

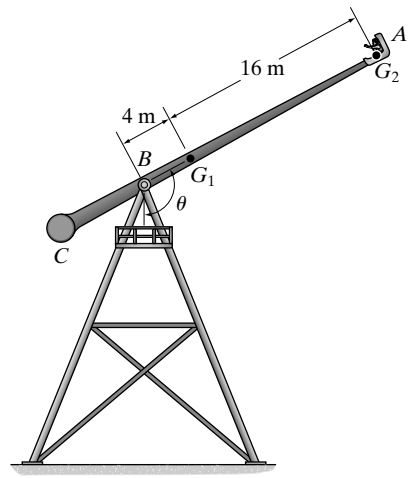

Potential Energy: With reference to the datum shown in Fig. *a*, the gravitational potential energy of the system at position (1) and (2) is

$$V_1 = (V_g)_1 = W_1(y_{G1})_1 + W_2(y_{G2})_1$$

$$= 1500(9.81)(4 \sin 60°) + 125(9.81)(20 \sin 60°)$$

$$= 72\,213.53 \text{ J}$$

$$V_2 = (V_g)_2 = -W_1(y_{G1})_2 - W_2(y_{G2})_2$$

$$= -1500(9.81)(4) - 125(9.81)(20)$$

$$= -83\,385 \text{ J}$$

Kinetic Energy: Since the arm rotates about a fixed axis passing through B, $v_{G1} = \omega r_{G1} = \omega(4)$ and $v_{G2} = \omega r_{G2} = \omega(20)$. The mass moment of inertia of the arm about its mass center is $I_{G1} = m_1 k_{G1}^2 = 1500(12^2) = 216\,000 \text{ kg}\cdot\text{m}^2$. Thus, the kinetic energy of the system is

$$T = \left[\frac{1}{2} m_1 (v_G)_1{}^2 + \frac{1}{2} I_{G1}\omega^2\right] + \frac{1}{2} m_2 (v_{G2})^2$$

$$= \left[\frac{1}{2}(1500)[\omega(4)]^2 + \frac{1}{2}(216\,000)\omega^2\right] + \frac{1}{2}(125)[\omega(20)]^2$$

$$= 145\,000\omega^2$$

Since the system is initially at rest, $T_1 = 0$.

Conservation of Energy:

$$T_1 + V_1 = T_2 + V_2$$

$$0 + 72\,213.53 = 145\,000\omega^2 - 83\,385$$

$$\omega = 1.0359 \text{ rad/s}$$

$$v = \omega r = (1.0359 \text{ rad/s})(20 \text{ m}) = 20.7 \text{ m/s}$$

Ans.

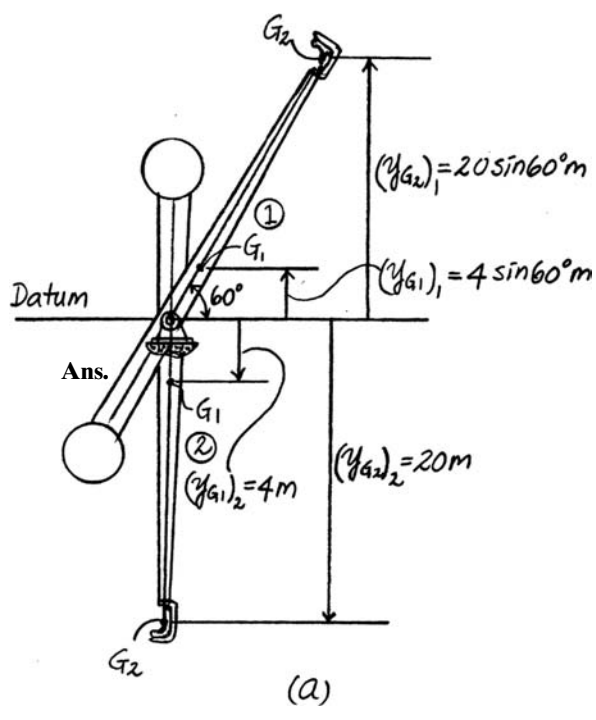

© 2010 Pearson Education, Inc., Upper Saddle River, NJ. All rights reserved. This material is protected under all copyright laws as they currently exist. No portion of this material may be reproduced, in any form or by any means, without permission in writing from the publisher.

18–60. The assembly consists of a 3-kg pulley A and 10-kg pulley B. If a 2-kg block is suspended from the cord, determine the block's speed after it descends 0.5 m starting from rest. Neglect the mass of the cord and treat the pulleys as thin disks. No slipping occurs.

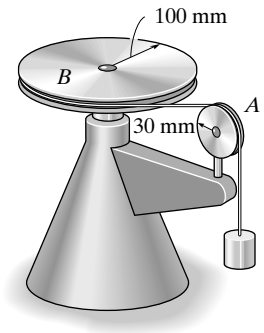

$$T_1 + V_1 = T_2 + V_2$$

$$[0 + 0 + 0] + [0] = \frac{1}{2}\left[\frac{1}{2}(3)(0.03)^2\right]\omega_A^2 + \frac{1}{2}\left[\frac{1}{2}(10)(0.1)^2\right]\omega_B^2 + \frac{1}{2}(2)(v_C)^2 - 2(9.81)(0.5)$$

$$v_C = \omega_B(0.1) = 0.03\,\omega_A$$

Thus,

$$\omega_B = 10\,v_C$$

$$\omega = 33.33 v_C$$

Substituting and solving yields,

$$v_C = 1.52 \text{ m/s} \qquad \textbf{Ans.}$$

•18–61. The motion of the uniform 80-lb garage door is guided at its ends by the track. Determine the required initial stretch in the spring when the door is open, $\theta = 0°$, so that when it falls freely it comes to rest when it just reaches the fully closed position, $\theta = 90°$. Assume the door can be treated as a thin plate, and there is a spring and pulley system on each of the two sides of the door.

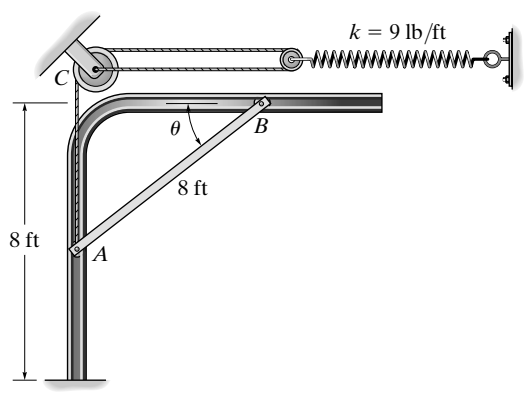

$$s_A + 2s_s = l$$

$$\Delta s_A = -2\Delta s_s$$

$$8 \text{ ft} = -2\Delta s_s$$

$$\Delta s_s = -4 \text{ ft}$$

$$T_1 + V_1 = T_2 + V_2$$

$$0 + 2\left[\frac{1}{2}(9)s^2\right] = 0 - 80(4) + 2\left[\frac{1}{2}(9)(4 + s)^2\right]$$

$$9s^2 = -320 + 9(16 + 8s + s^2)$$

$$s = 2.44 \text{ ft} \qquad \textbf{Ans.}$$

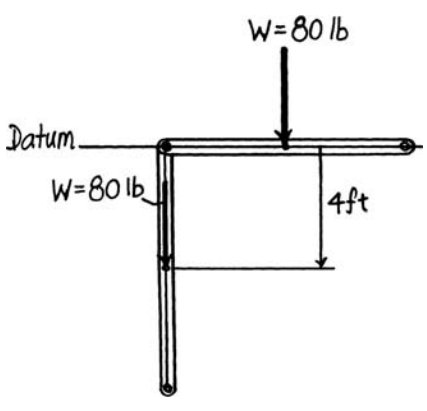

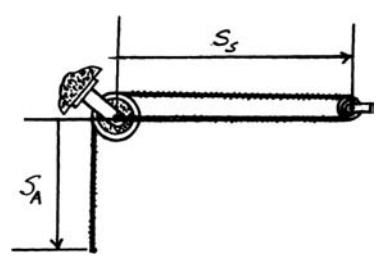

© 2010 Pearson Education, Inc., Upper Saddle River, NJ. All rights reserved. This material is protected under all copyright laws as they currently exist. No portion of this material may be reproduced, in any form or by any means, without permission in writing from the publisher.

18–62. The motion of the uniform 80-lb garage door is guided at its ends by the track. If it is released from rest at $\theta = 0°$, determine the door's angular velocity at the instant $\theta = 30°$. The spring is originally stretched 1 ft when the door is held open, $\theta = 0°$. Assume the door can be treated as a thin plate, and there is a spring and pulley system on each of the two sides of the door.

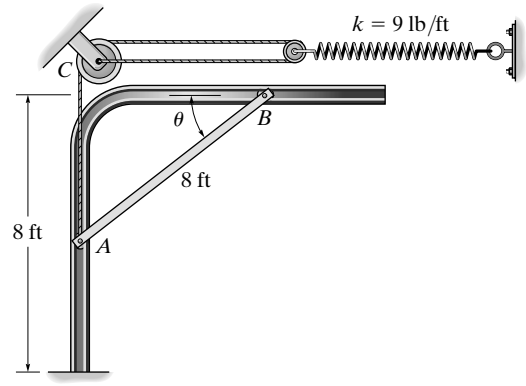

$$v_G = 4\omega$$

$$s_A + 2s_s = l$$

$$\Delta s_A = -2\Delta s_s$$

$$4 \text{ ft} = -2\Delta s_s$$

$$\Delta s_s = -2 \text{ ft}$$

$$T_1 + V_1 = T_2 + V_2$$

$$0 + 2\left[\frac{1}{2}(9)(1)^2\right] = \frac{1}{2}\left(\frac{80}{32.2}\right)(4\omega)^2 + \frac{1}{2}\left[\frac{1}{12}\left(\frac{80}{32.2}\right)(8)^2\right]\omega^2 - 80(4 \sin 30°)$$

$$+ 2\left[\frac{1}{2}(9)(2 + 1)^2\right]$$

$$\omega = 1.82 \text{ rad/s} \qquad \textbf{Ans.}$$

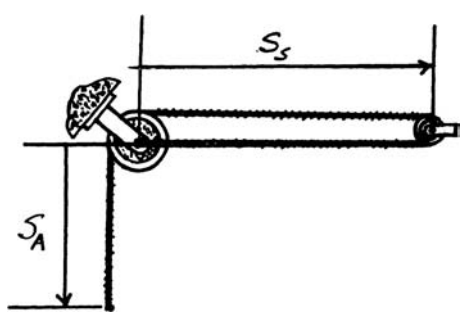

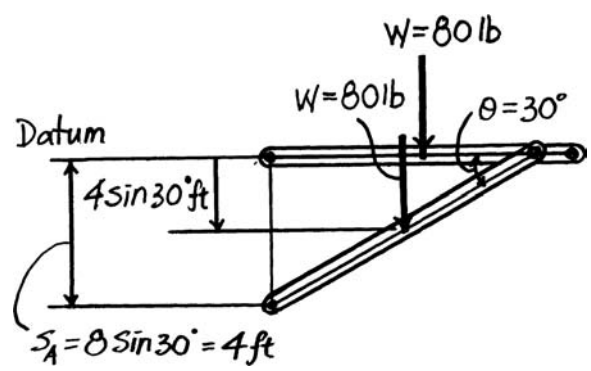

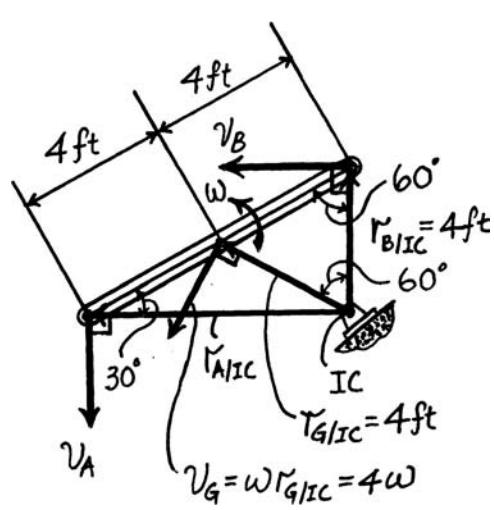

© 2010 Pearson Education, Inc., Upper Saddle River, NJ. All rights reserved. This material is protected under all copyright laws as they currently exist. No portion of this material may be reproduced, in any form or by any means, without permission in writing from the publisher.

18–63. The 500-g rod AB rests along the smooth inner surface of a hemispherical bowl. If the rod is released from rest from the position shown, determine its angular velocity at the instant it swings downward and becomes horizontal.

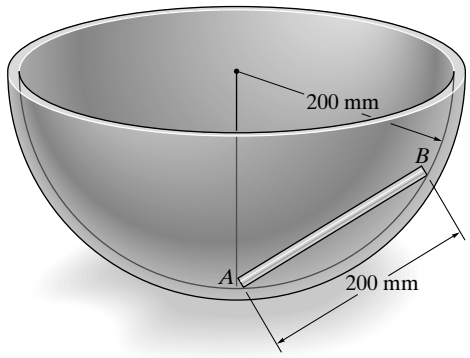

Select datum at the bottom of the bowl.

$$\theta = \sin^{-1}\left(\frac{0.1}{0.2}\right) = 30°$$

$$h = 0.1 \sin 30° = 0.05$$

$$CE = \sqrt{(0.2)^2 - (0.1)^2} = 0.1732 \text{ m}$$

$$ED = 0.2 - 0.1732 = 0.02679$$

$$T_1 + V_1 = T_2 + V_2$$

$$0 + (0.5)(9.81)(0.05) = \frac{1}{2}\left[\frac{1}{12}(0.5)(0.2)^2\right]\omega_{AB}^2 + \frac{1}{2}(0.5)(v_G)^2 + (0.5)(9.81)(0.02679)$$

Since $v_G = 0.1732\omega_{AB}$

$$\omega_{AB} = 3.70 \text{ rad/s}$$ **Ans.**

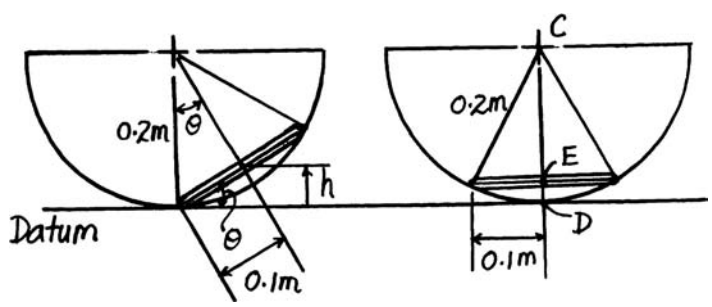

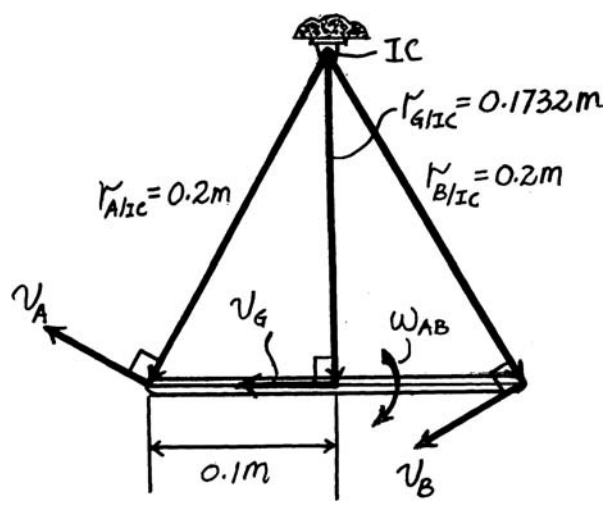

***18–64.** The 25-lb slender rod AB is attached to spring BC which has an unstretched length of 4 ft. If the rod is released from rest when $\theta = 30°$, determine its angular velocity at the instant $\theta = 90°$.

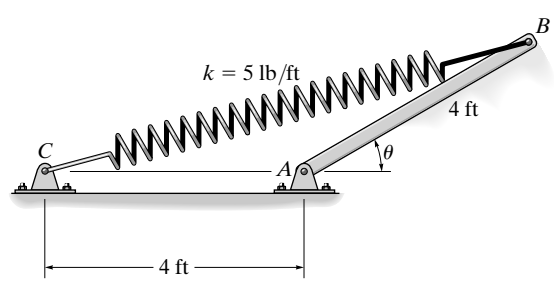

$$l = \sqrt{(4)^2 + (4)^2 - 2(4)(4)\cos 150°} = 7.727 \text{ ft}$$

$$T_1 + V_1 = T_2 + V_2$$

$$0 + 25(2)\sin 30° + \frac{1}{2}(5)(7.727 - 4)^2 = \frac{1}{2}\left[\frac{1}{3}\left(\frac{25}{32.2}\right)(4)^2\right]\omega^2 + 25(2) + \frac{1}{2}(5)(4\sqrt{2} - 4)^2$$

$$\omega = 1.18 \text{ rad/s}$$ **Ans.**

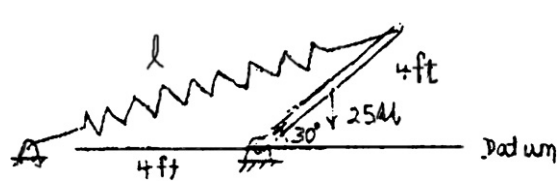

© 2010 Pearson Education, Inc., Upper Saddle River, NJ. All rights reserved. This material is protected under all copyright laws as they currently exist. No portion of this material may be reproduced, in any form or by any means, without permission in writing from the publisher.

•18–65. The 25-lb slender rod AB is attached to spring BC which has an unstretched length of 4 ft. If the rod is released from rest when $\theta = 30°$, determine the angular velocity of the rod the instant the spring becomes unstretched.

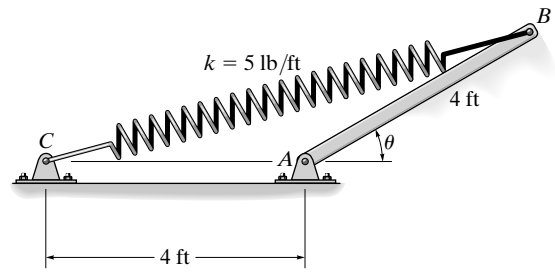

$$l = \sqrt{(4)^2 + (4)^2 - 2(4)(4)\cos 150°} = 7.727 \text{ ft}$$

$$T_1 + V_1 = T_2 + V_2$$

$$0 + 25(2)\sin 30° + \frac{1}{2}(5)(7.727 - 4)^2 = \frac{1}{2}\left[\frac{1}{3}\left(\frac{25}{32.2}\right)(4)^2\right]\omega^2 + 25(2)(\sin 60°) + 0$$

$$\omega = 2.82 \text{ rad/s} \qquad \textbf{Ans.}$$

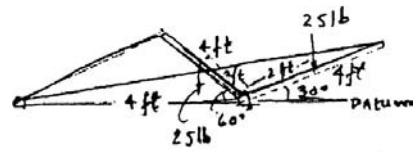

18–66. The assembly consists of two 8-lb bars which are pin connected to the two 10-lb disks. If the bars are released from rest when $\theta = 60°$, determine their angular velocities at the instant $\theta = 0°$. Assume the disks roll without slipping.

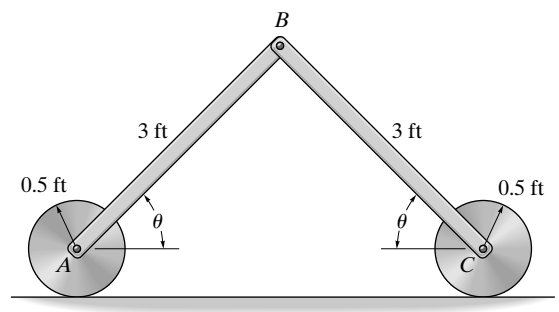

$$\omega_{AB} = \omega_{BC}$$

$$T_1 + V_1 = T_2 + V_2$$

$$[0] + 2(8)(1.5\sin 60°) = 2\left[\frac{1}{2}\left(\frac{1}{3}\right)\left(\frac{8}{32.2}\right)(3)^2\omega^2\right] + [0]$$

$$\omega = 5.28 \text{ rad/s} \qquad \textbf{Ans.}$$

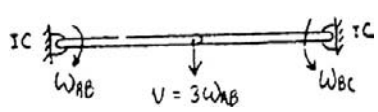

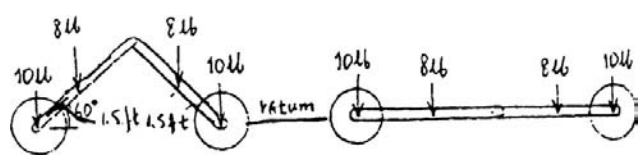

18–67. The assembly consists of two 8-lb bars which are pin connected to the two 10-lb disks. If the bars are released from rest when $\theta = 60°$, determine their angular velocities at the instant $\theta = 30°$. Assume the disks roll without slipping.

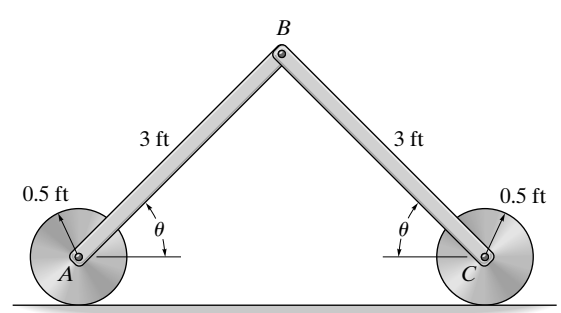

$$\omega_D = \frac{v_A}{0.5} \qquad v_A = \omega_{AB}(1.5)$$

$$\omega_D = 3\omega_{AB} \qquad v_G = 1.5\omega_{AB}$$

$$T_1 + V_1 = T_2 + V_2$$

$$[0 + 0] + 2[8(1.5\sin 60°)]$$

$$= 2\left[\frac{1}{2}\left\{\frac{1}{2}\left(\frac{10}{32.2}\right)(0.5)^2\right\}(3\omega_{AB})^2 + \frac{1}{2}\left(\frac{10}{32.2}\right)\{\omega_{AB}(1.5)\}^2\right.$$

$$\left. + \frac{1}{2}\left(\frac{8}{32.2}\right)(1.5\omega_{AB})^2 + \frac{1}{2}\left\{\frac{1}{12}\left(\frac{8}{32.2}\right)(3)^2\right\}(\omega_{AB})^2\right] + 2[8(1.5\sin 30°)]$$

$$\omega_{AB} = 2.21 \text{ rad/s} \qquad \textbf{Ans.}$$

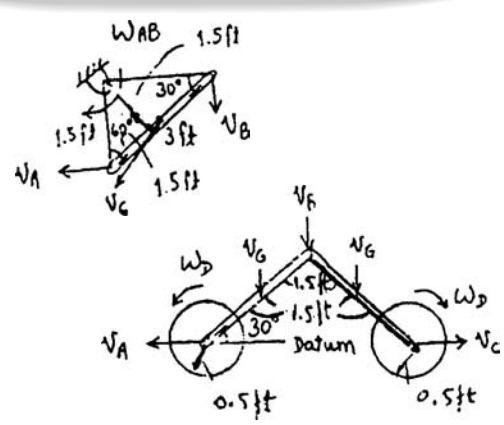

© 2010 Pearson Education, Inc., Upper Saddle River, NJ. All rights reserved. This material is protected under all copyright laws as they currently exist. No portion of this material may be reproduced, in any form or by any means, without permission in writing from the publisher.

***18–68.** The uniform window shade AB has a total weight of 0.4 lb. When it is released, it winds up around the spring-loaded core O. Motion is caused by a spring within the core, which is coiled so that it exerts a torque $M = 0.3(10^{-3})\theta$ lb · ft, where θ is in radians, on the core. If the shade is released from rest, determine the angular velocity of the core at the instant the shade is completely rolled up, i.e., after 12 revolutions. When this occurs, the spring becomes uncoiled and the radius of gyration of the shade about the axle at O is $k_O = 0.9$ in. *Note:* The elastic potential energy of the torsional spring is $V_e = \frac{1}{2}k\theta^2$, where $M = k\theta$ and $k = 0.3(10^{-3})$ lb · ft/rad.

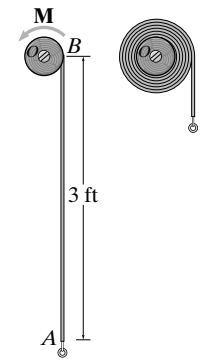

$$(2)^2 = (6)^2 + (CD)^2 - 2(6)(CD)\cos 15°$$

$$CD^2 - 11.591CD + 32 = 0$$

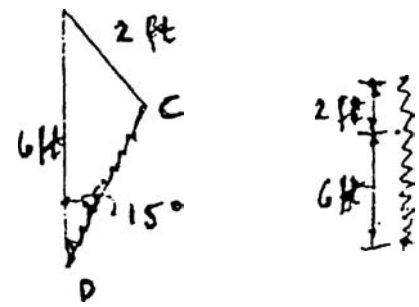

Selecting the smaller root:

$$CD = 4.5352 \text{ ft}$$

$$T_1 + V_1 = T_2 + V_2$$

$$0 + 0 = 0 + 2\left[\frac{1}{2}(k)(8 - 4.5352)^2\right] - 200(6)$$

$$k = 100 \text{ lb/ft}$$ **Ans.**

18–69. When the slender 10-kg bar AB is horizontal it is at rest and the spring is unstretched. Determine the stiffness k of the spring so that the motion of the bar is momentarily stopped when it has rotated clockwise 90°.

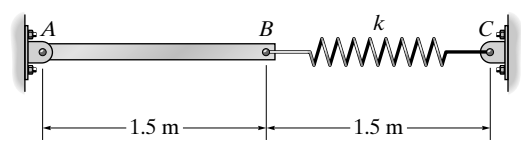

$$T_1 + V_1 = T_2 + V_2$$

$$0 + 0 = 0 + \frac{1}{2}(k)(3.3541 - 1.5)^2 - 98.1\left(\frac{1.5}{2}\right)$$

$$k = 42.8 \text{ N/m}$$ **Ans.**

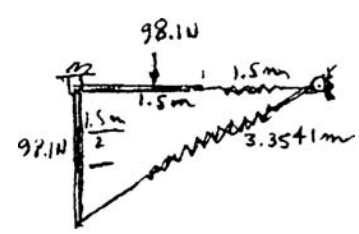

© 2010 Pearson Education, Inc., Upper Saddle River, NJ. All rights reserved. This material is protected under all copyright laws as they currently exist. No portion of this material may be reproduced, in any form or by any means, without permission in writing from the publisher.

•19–1. The rigid body (slab) has a mass m and rotates with an angular velocity $\boldsymbol{\omega}$ about an axis passing through the fixed point O. Show that the momenta of all the particles composing the body can be represented by a single vector having a magnitude mv_G and acting through point P, called the *center of percussion,* which lies at a distance $r_{P/G} = k_G^2/r_{G/O}$ from the mass center G. Here k_G is the radius of gyration of the body, computed about an axis perpendicular to the plane of motion and passing through G.

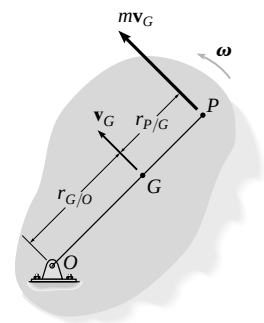

$$H_O = (r_{G/O} + r_{P/G})\, mv_G = r_{G/O}\,(mv_G) + I_G\omega, \qquad \text{where} \quad I_G = mk_G^2$$

$$r_{G/O}\,(mv_G) + r_{P/G}\,(mv_G) = r_{G/O}\,(mv_G) + (mk_G^2)\,\omega$$

$$r_{P/G} = \frac{k_G^2}{v_G/\omega}$$

However, $\quad v_G = \omega r_{G/O} \quad$ or $\quad r_{G/O} = \dfrac{v_G}{\omega}$

$$r_{P/G} = \frac{k_G^2}{r_{G/O}}$$

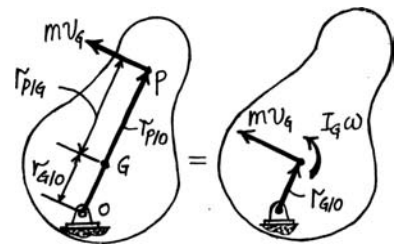

Q.E.D.

19–2. At a given instant, the body has a linear momentum $\mathbf{L} = m\mathbf{v}_G$ and an angular momentum $\mathbf{H}_G = I_G\boldsymbol{\omega}$ computed about its mass center. Show that the angular momentum of the body computed about the instantaneous center of zero velocity IC can be expressed as $\mathbf{H}_{IC} = I_{IC}\boldsymbol{\omega}$, where I_{IC} represents the body's moment of inertia computed about the instantaneous axis of zero velocity. As shown, the IC is located at a distance $r_{G/IC}$ away from the mass center G.

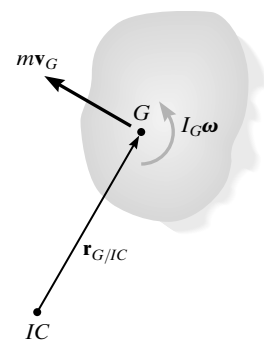

$$H_{IC} = r_{G/IC}\,(mv_G) + I_G\,\omega, \qquad \text{where} \quad v_G = \omega r_{G/IC}$$

$$= r_{G/IC}\,(m\omega r_{G/IC}) + I_G\,\omega$$

$$= (I_G + mr_{G/IC}^2)\,\omega$$

$$= I_{IC}\,\omega$$

Q.E.D.

19–3. Show that if a slab is rotating about a fixed axis perpendicular to the slab and passing through its mass center G, the angular momentum is the same when computed about any other point P.

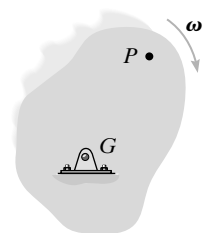

Since $v_G = 0$, the linear momentum $L = mv_G = 0$. Hence the angular momentum about any point P is

$$H_P = I_G\,\omega$$

Since ω is a free vector, so is $\mathbf{H}_P$.

Q.E.D.

© 2010 Pearson Education, Inc., Upper Saddle River, NJ. All rights reserved. This material is protected under all copyright laws as they currently exist. No portion of this material may be reproduced, in any form or by any means, without permission in writing from the publisher.

***19–4.** The pilot of a crippled jet was able to control his plane by throttling the two engines. If the plane has a weight of 17 000 lb and a radius of gyration of $k_G = 4.7$ ft about the mass center G, determine the angular velocity of the plane and the velocity of its mass center G in $t = 5$ s if the thrust in each engine is altered to $T_1 = 5000$ lb and $T_2 = 800$ lb as shown. Originally the plane is flying straight at 1200 ft/s. Neglect the effects of drag and the loss of fuel.

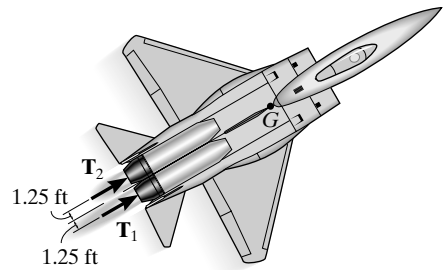

$$(\circlearrowleft +) \qquad (H_G)_1 + \Sigma \int M_G\, dt = (H_G)_2$$

$$0 + 5000(5)(1.25) - 800(5)(1.25) = \left[\left(\frac{17\,000}{32.2}\right)(4.7)^2\right]\omega$$

$$\omega = 2.25 \text{ rad/s} \qquad \textbf{Ans.}$$

$$\left(\overset{+}{\rightarrow}\right) \qquad m(v_{Gx})_1 + \Sigma \int F_x\, dt = m(v_{Gx})_2$$

$$\left(\frac{17\,000}{32.2}\right)(1200) + 5800(5) = \left(\frac{17\,000}{32.2}\right)(v_G)_2$$

$$(v_G)_2 = 1.25\left(10^3\right) \text{ ft/s} \qquad \textbf{Ans.}$$

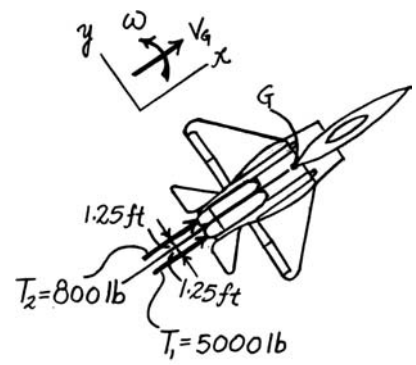

•19–5. The assembly weighs 10 lb and has a radius of gyration $k_G = 0.6$ ft about its center of mass G. The kinetic energy of the assembly is 31 ft · lb when it is in the position shown. If it rolls counterclockwise on the surface without slipping, determine its linear momentum at this instant.

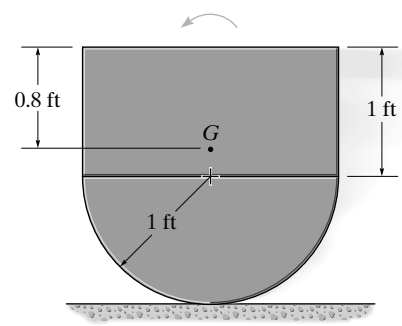

Kinetic Energy: Since the assembly rolls without slipping, then $\omega = \dfrac{v_G}{r_{G/IC}} = \dfrac{v_G}{1.2} = 0.8333 v_G$.

$$T = \frac{1}{2} m v_G^2 + \frac{1}{2} I_G \omega^2$$

$$31 = \frac{1}{2}\left(\frac{10}{32.2}\right) v_G^2 + \frac{1}{2}\left[\frac{10}{32.2}\left(0.6^2\right)\right](0.8333 v_G)^2$$

$$v_G = 12.64 \text{ ft/s}$$

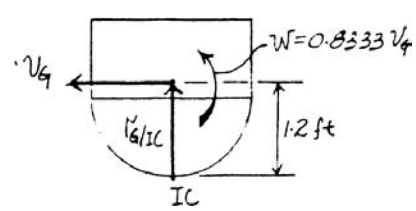

Linear Momentum: Applying Eq. 19–7, we have

$$L = m v_G = \frac{10}{32.2}(12.64) = 3.92 \text{ slug} \cdot \text{ft/s} \qquad \textbf{Ans.}$$

19–6. The impact wrench consists of a slender 1-kg rod AB which is 580 mm long, and cylindrical end weights at A and B that each have a diameter of 20 mm and a mass of 1 kg. This assembly is free to rotate about the handle and socket, which are attached to the lug nut on the wheel of a car. If the rod AB is given an angular velocity of 4 rad/s and it strikes the bracket C on the handle without rebounding, determine the angular impulse imparted to the lug nut.

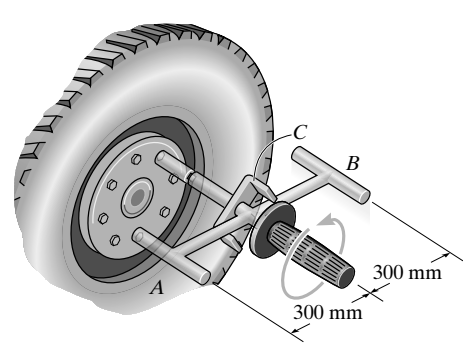

$$I_{\text{axle}} = \frac{1}{12}(1)(0.6 - 0.02)^2 + 2\left[\frac{1}{2}(1)(0.01)^2 + 1(0.3)^2\right] = 0.2081 \text{ kg} \cdot \text{m}^2$$

$$\int M dt = I_{\text{axle}}\, \omega = 0.2081(4) = 0.833 \text{ kg} \cdot \text{m}^2/\text{s} \qquad \textbf{Ans.}$$

© 2010 Pearson Education, Inc., Upper Saddle River, NJ. All rights reserved. This material is protected under all copyright laws as they currently exist. No portion of this material may be reproduced, in any form or by any means, without permission in writing from the publisher.

19–7. The space shuttle is located in "deep space," where the effects of gravity can be neglected. It has a mass of 120 Mg, a center of mass at G, and a radius of gyration $(k_G)_x = 14$ m about the x axis. It is originally traveling forward at $v = 3$ km/s when the pilot turns on the engine at A, creating a thrust $T = 600(1 - e^{-0.3t})$ kN, where t is in seconds. Determine the shuttle's angular velocity 2 s later.

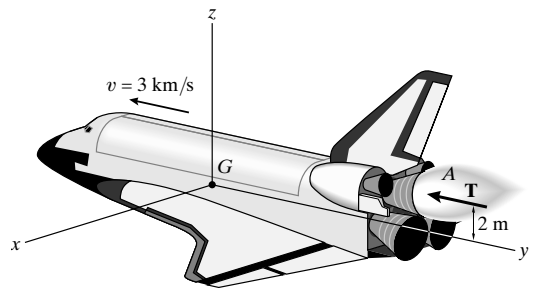

$$(\circlearrowleft +) \qquad (H_G)_1 + \Sigma \int M_G\, dt = (H_G)_2$$

$$0 + \int_0^2 600\left(10^3\right)\left(1 - e^{-0.3\,t}\right)(2)\, dt = \left[120\left(10^3\right)(14)^2\right]\omega$$

$$1200\left(10^3\right)\left[t + \frac{1}{0.3}\, e^{-0.3\,t}\right]_0^2 = 120\left(10^3\right)(14)^2\,\omega$$

Ans. $\omega = 0.0253$ rad/s

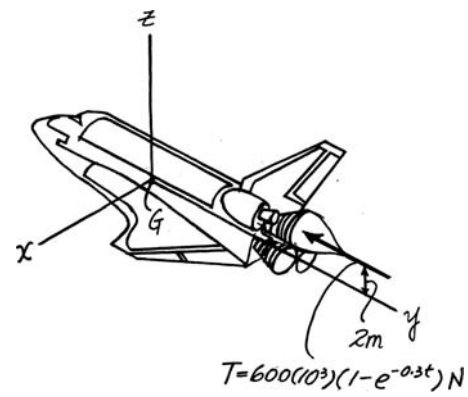

***19–8.** The 50-kg cylinder has an angular velocity of 30 rad/s when it is brought into contact with the horizontal surface at C. If the coefficient of kinetic friction is $\mu_C = 0.2$, determine how long it will take for the cylinder to stop spinning. What force is developed in link AB during this time? The axle through the cylinder is connected to two symmetrical links. (Only AB is shown.) For the computation, neglect the weight of the links.

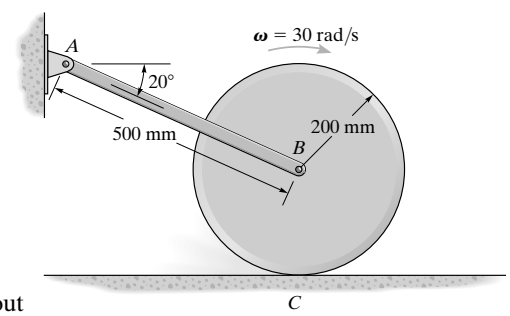

Principle of Impulse and Momentum: The mass moment inertia of the cylinder about its mass center is $I_G = \frac{1}{2}(50)\left(0.2^2\right) = 1.00\ \text{kg}\cdot\text{m}^2$. Applying Eq. 19–14, we have

$$m\left(v_{G_y}\right)_1 + \Sigma \int_{t_1}^{t_2} F_y\, dt = m\left(v_{G_y}\right)_2$$

$$(+\uparrow) \qquad 0 + N(t) + 2F_{AB}\sin 20^\circ\,(t) - 50(9.81)(t) = 0 \qquad \textbf{(1)}$$

$$m\left(v_{G_x}\right)_1 + \Sigma \int_{t_1}^{t_2} F_x\, dt = m\left(v_{G_x}\right)_2$$

$$\left(\overset{+}{\rightarrow}\right) \qquad 0 + 0.2N(t) - 2F_{AB}\cos 20^\circ(t) = 0 \qquad \textbf{(2)}$$

$$I_G\omega_1 + \Sigma \int_{t_1}^{t_2} M_G\, dt = I_G\,\omega_2$$

$$(\circlearrowleft +) \qquad -1.00(30) + [0.2N(t)](0.2) = 0 \qquad \textbf{(3)}$$

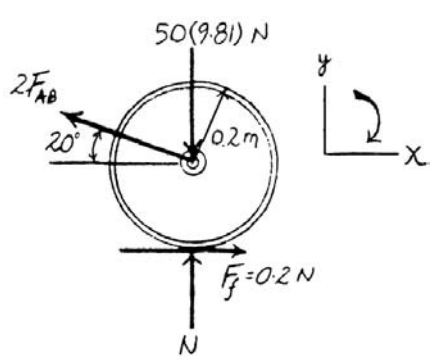

Solving Eqs. (1), (2), and (3) yields

$$F_{AB} = 48.7\ \text{N} \qquad t = 1.64\ \text{s} \qquad \textbf{Ans.}$$

$$N = 457.22\ \text{N}$$

© 2010 Pearson Education, Inc., Upper Saddle River, NJ. All rights reserved. This material is protected under all copyright laws as they currently exist. No portion of this material may be reproduced, in any form or by any means, without permission in writing from the publisher.

•19–9. If the cord is subjected to a horizontal force of $P = 150$ N, and the gear rack is fixed to the horizontal plane, determine the angular velocity of the gear in 4 s, starting from rest. The mass of the gear is 50 kg, and it has a radius of gyration about its center of mass O of $k_O = 125$ mm.

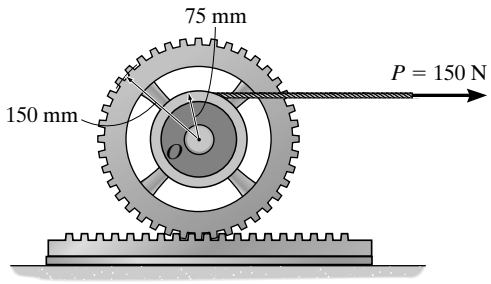

Kinematics: Referring to Fig. *a*,

$$v_O = \omega r_{O/IC} = \omega(0.15)$$

Principle of Angular Impulse and Momentum: The mass moment of inertia of the gear about its mass center is $I_O = mk_O{}^2 = 50\left(0.125^2\right) = 0.78125\ \text{kg}\cdot\text{m}^2$. From Fig. *b*,

$$\circlearrowleft + I_P\omega_1 + \Sigma\int_{t_1}^{t_2} M_P\,dt = I_P\omega_2$$

$$0 + 150(4)(0.225) = 0.78125\omega + 50[\omega(0.15)](0.15)$$

$$\omega = 70.8\ \text{rad/s} \qquad \textbf{Ans.}$$

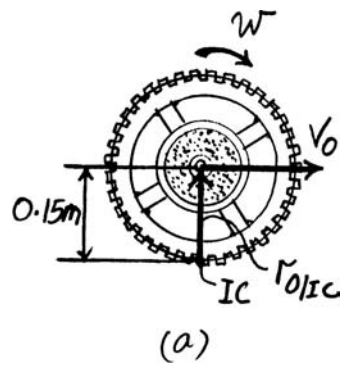

(a)

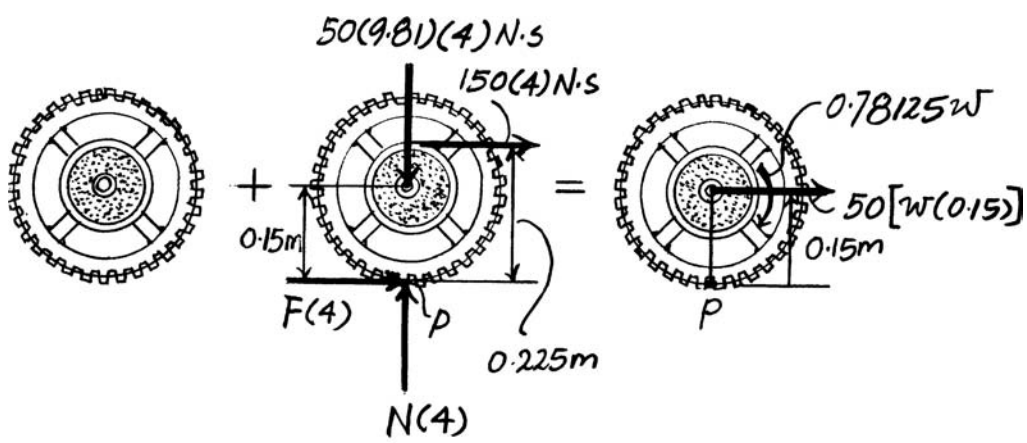

(b)

© 2010 Pearson Education, Inc., Upper Saddle River, NJ. All rights reserved. This material is protected under all copyright laws as they currently exist. No portion of this material may be reproduced, in any form or by any means, without permission in writing from the publisher.

19–10. If the cord is subjected to a horizontal force of $P = 150$ N, and gear is supported by a fixed pin at O, determine the angular velocity of the gear and the velocity of the 20-kg gear rack in 4 s, starting from rest. The mass of the gear is 50 kg and it has a radius of gyration of $k_O = 125$ mm. Assume that the contact surface between the gear rack and the horizontal plane is smooth.

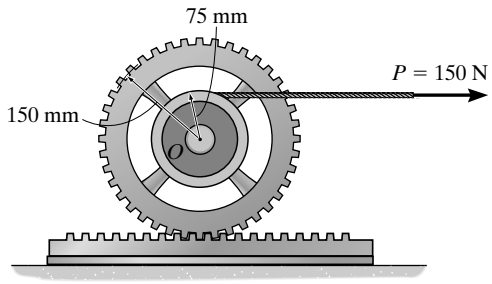

Principle of Impulse and Momentum: The mass moment of inertia of the gear about its mass center is $I_O = mk_O{}^2 = 50\left(0.125^2\right) = 0.78125\ \text{kg}\cdot\text{m}^2$. Referring to the free-body diagram of the gear shown in Fig. *a*,

$$\circlearrowleft + \quad I_O\omega_1 + \Sigma\int_{t_1}^{t_2} M_O\,dt = I_O\omega_2$$

$$0 + F(4)(0.15) - 150(4)(0.075) = -0.78125\omega_A$$

$$F = 75 - 1.302\omega_A \qquad \textbf{(1)}$$

Since the gear rotates about the fixed axis, $v_P = \omega_A r_P = \omega_A(0.15)$. Referring to the free-body diagram of the gear rack shown in Fig. *b*,

$$(\overset{+}{\leftarrow}) \qquad mv_1 + \Sigma\int_{t_1}^{t_2} F_x dt = mv_2$$

$$0 + F(4) = 20[\omega_A(0.15)]$$

$$F = 0.75\omega_A \qquad \textbf{(2)}$$

Equating Eqs. (1) and (2),

$$0.75\omega_A = 75 - 1.302\omega_A$$

$$\omega_A = 36.548\ \text{rad/s} = 36.5\ \text{rad/s} \qquad \textbf{Ans.}$$

Then,

$$v = 36.548(0.15) = 5.48\ \text{m/s} \qquad \textbf{Ans.}$$

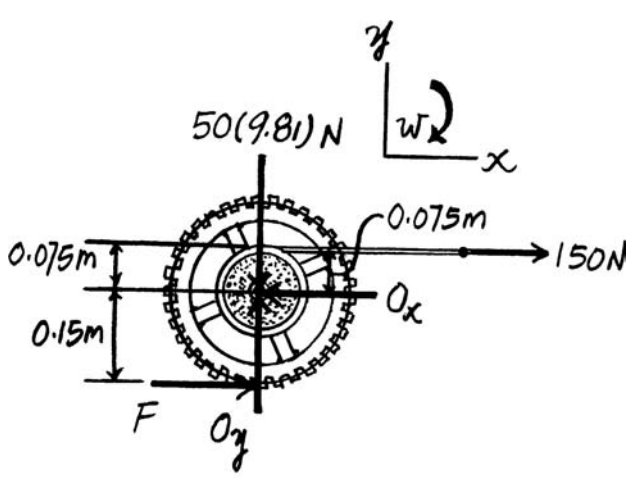

(a)

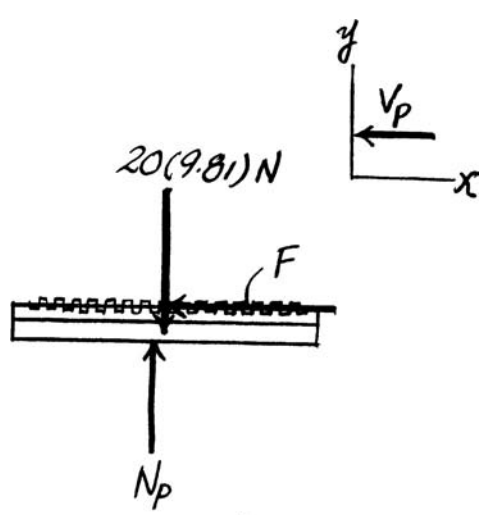

(b)

© 2010 Pearson Education, Inc., Upper Saddle River, NJ. All rights reserved. This material is protected under all copyright laws as they currently exist. No portion of this material may be reproduced, in any form or by any means, without permission in writing from the publisher.

19–11. A motor transmits a torque of $M = 0.05\ \text{N}\cdot\text{m}$ to the center of gear A. Determine the angular velocity of each of the three (equal) smaller gears in 2 s starting from rest. The smaller gears (B) are pinned at their centers, and the masses and centroidal radii of gyration of the gears are given in the figure.

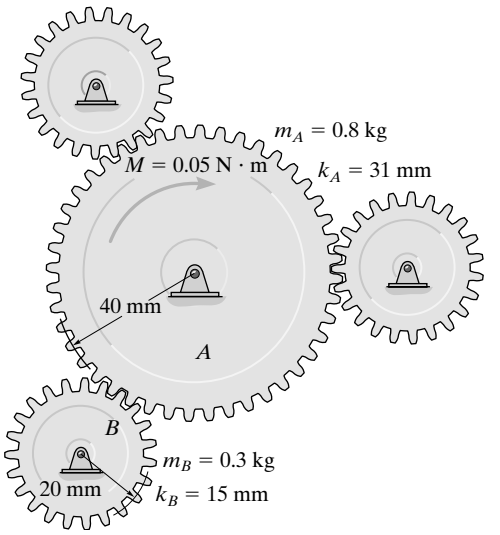

Gear A:

$$(\circlearrowright +) \qquad (H_A)_1 + \Sigma \int M_A\, dt = (H_A)_2$$

$$0 - 3(F)(2)(0.04) + 0.05(2) = [0.8(0.031)^2]\,\omega_A$$

Gear B:

$$(\circlearrowleft +) \qquad (H_B)_1 + \Sigma \int M_B\, dt = (H_B)_2$$

$$0 + (F)(2)(0.02) = [0.3(0.015)^2]\,\omega_B$$

Since $0.04\omega_A = 0.02\,\omega_B$, or $\omega_B = 2\,\omega_A$, then solving,

$F = 0.214$ N

$\omega_A = 63.3$ rad/s

$\omega_B = 127$ rad/s **Ans.**

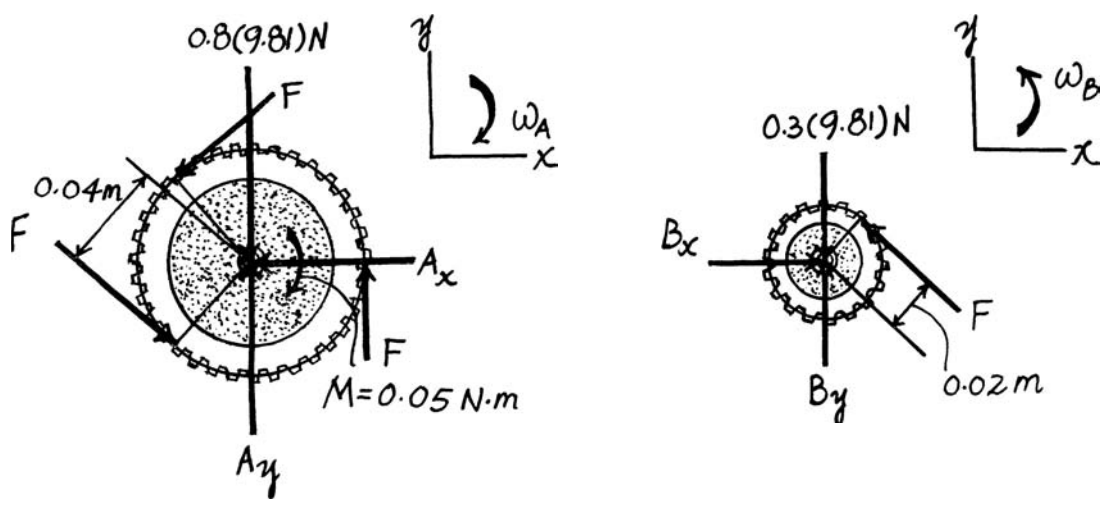

© 2010 Pearson Education, Inc., Upper Saddle River, NJ. All rights reserved. This material is protected under all copyright laws as they currently exist. No portion of this material may be reproduced, in any form or by any means, without permission in writing from the publisher.

***19–12.** The 200-lb flywheel has a radius of gyration about its center of gravity O of $k_O = 0.75$ ft. If it rotates counterclockwise with an angular velocity of 1200 rev/min before the brake is applied, determine the time required for the wheel to come to rest when a force of $P = 200$ lb is applied to the handle. The coefficient of kinetic friction between the belt and the wheel rim is $\mu_k = 0.3$. (*Hint*: Recall from the statics text that the relation of the tension in the belt is given by $T_B = T_C e^{\mu\beta}$, where β is the angle of contact in radians.)

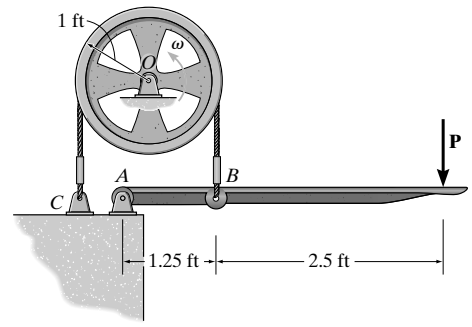

Equilibrium: Writing the moment equation of equilibrium about point A and referring to the free-body diagram of the arm brake shown in Fig. a,

$$\circlearrowleft + \Sigma M_A = 0; \qquad T_B(1.25) - 200(3.75) = 0 \qquad T_B = 600 \text{ lb}$$

Using the belt friction formula,

$$T_B = T_C e^{\mu\beta}$$

$$600 = T_C e^{0.3(\pi)}$$

$$T_C = 233.80 \text{ lb}$$

Principle of Angular Impulse and Momentum: The mass moment of inertia of the wheel about its mass center is $I_O = mk_O{}^2 = \left(\frac{200}{32.2}\right)\left(0.75^2\right) = 3.494 \text{ slug}\cdot\text{ft}^2$, and the initial angular velocity of the wheel is $\omega_1 = \left(1200\,\frac{\text{rev}}{\text{min}}\right)\left(\frac{2\pi \text{ rad}}{1 \text{ rev}}\right)\left(\frac{1 \text{ min}}{60 \text{ s}}\right) = 40\pi$ rad/s. Applying the angular impulse and momentum equation about point O using the free-body diagram of the wheel shown in Fig. b,

$$\circlearrowleft + \quad I_O\omega_1 + \Sigma \int_{t_1}^{t_2} M_O\, dt = I_O\omega_2$$

$$3.494(40\pi) + 233.80(t)(1) - 600(t)(1) = 0$$

$$t = 1.20 \text{ s} \qquad \textbf{Ans.}$$

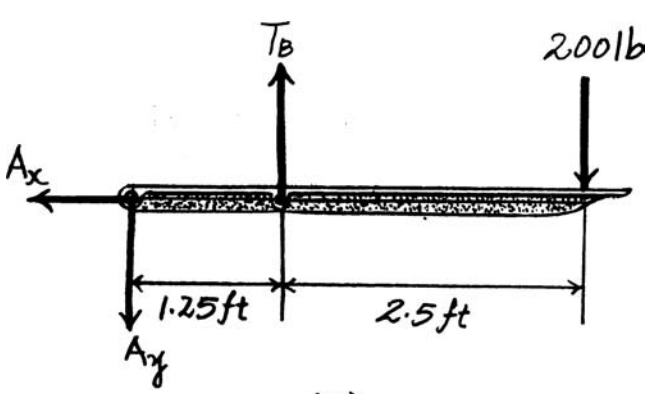

(a)

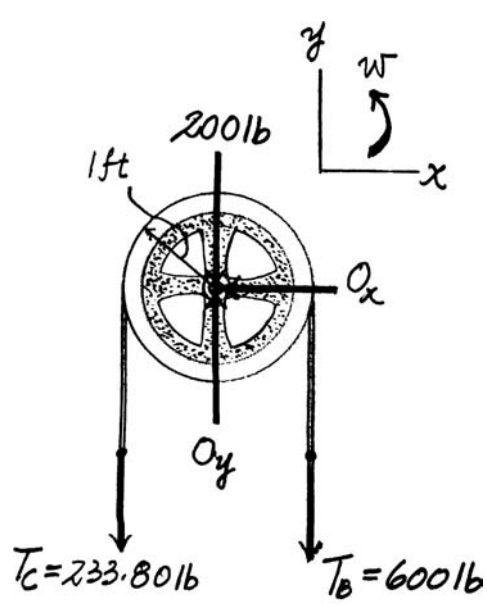

(b)

© 2010 Pearson Education, Inc., Upper Saddle River, NJ. All rights reserved. This material is protected under all copyright laws as they currently exist. No portion of this material may be reproduced, in any form or by any means, without permission in writing from the publisher.

•19–13. The 200-lb flywheel has a radius of gyration about its center of gravity O of $k_O = 0.75$ ft. If it rotates counterclockwise with a constant angular velocity of 1200 rev/min before the brake is applied, determine the required force **P** that must be applied to the handle to stop the wheel in 2 s. The coefficient of kinetic friction between the belt and the wheel rim is $\mu_k = 0.3$. (*Hint*: Recall from the statics text that the relation of the tension in the belt is given by $T_B = T_C e^{\mu\beta}$, where β is the angle of contact in radians.)

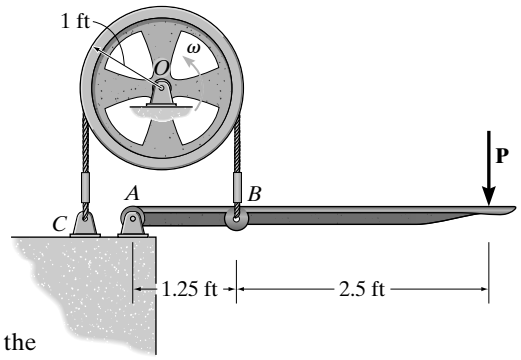

Principle of Angular Impulse and Momentum: The mass moment of inertia of the wheel about its mass center is $I_O = mk_O{}^2 = \left(\frac{200}{32.2}\right)(0.75^2) = 3.494\ \text{slug}\cdot\text{ft}^2$, and the initial angular velocity of the wheel is $\omega_1 = \left(1200\,\frac{\text{rev}}{\text{min}}\right)\left(\frac{2\pi\ \text{rad}}{1\ \text{rev}}\right)\left(\frac{1\ \text{min}}{60\ \text{s}}\right) = 40\pi$ rad/s. Applying the angular impulse and momentum equation about point O using the free-body diagram shown in Fig. *a*,

$$\circlearrowleft + \quad I_O\omega_1 + \Sigma\int_{t_1}^{t_2} M_O\,dt = I_O\omega_2$$

$$3.494(40\pi) + T_C(2)(1) - T_B(2)(1) = 0$$

$$T_B - T_C = 219.52 \qquad \textbf{(1)}$$

Using the belt friction formula,

$$T_B = T_C e^{\mu\beta}$$

$$T_B = T_C e^{0.3(\pi)} \qquad \textbf{(2)}$$

Solving Eqs. (1) and (2),

$$T_C = 140.15\ \text{lb} \qquad T_B = 359.67\ \text{lb}$$

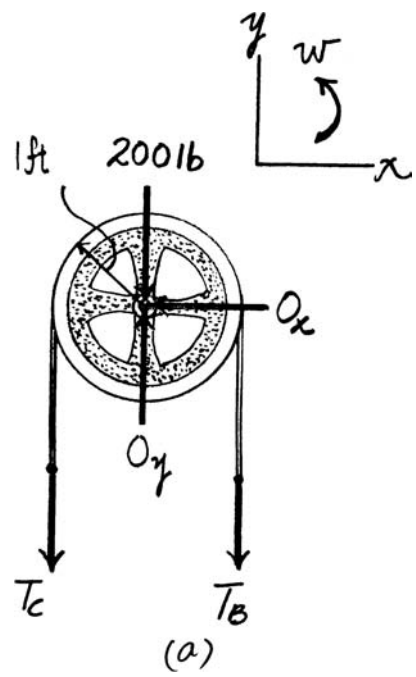

Equilibrium: Using this result and writing the moment equation of equilibrium about point A using the free-body diagram of the brake arm shown in Fig. *b*,

$$\circlearrowleft + \Sigma M_A = 0; \qquad 359.67(1.25) - P(3.75) = 0$$

$$P = 120\ \text{lb} \qquad \textbf{Ans.}$$

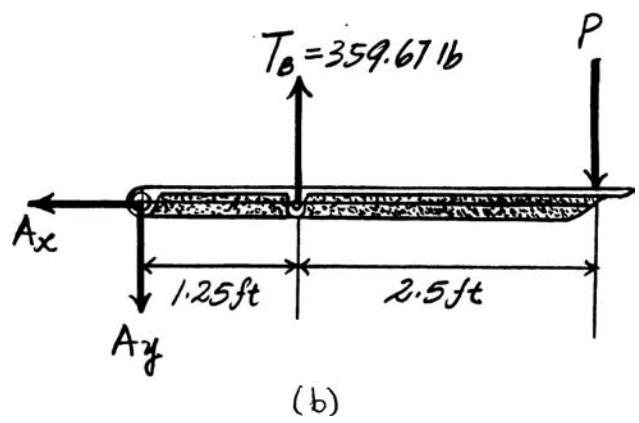

© 2010 Pearson Education, Inc., Upper Saddle River, NJ. All rights reserved. This material is protected under all copyright laws as they currently exist. No portion of this material may be reproduced, in any form or by any means, without permission in writing from the publisher.

19–14. The 12-kg disk has an angular velocity of $\omega = 20$ rad/s. If the brake ABC is applied such that the magnitude of force **P** varies with time as shown, determine the time needed to stop the disk. The coefficient of kinetic friction at B is $\mu_k = 0.4$. Neglect the thickness of the brake.

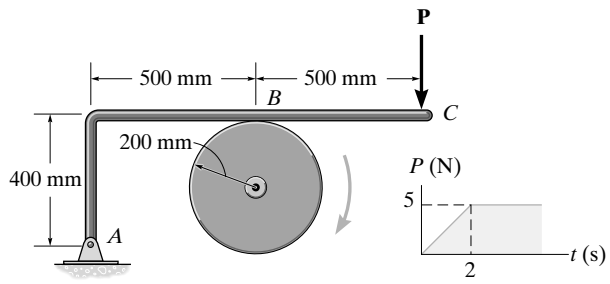

Equation of Equilibrium: Since slipping occurs at B, the friction $F_f = \mu_k N_B = 0.4N_B$. From FBD(a), the normal reaction N_B can be obtained directed by summing moments about point A.

$$\circlearrowleft + \Sigma M_A = 0; \qquad N_B(0.5) - 0.4N_B(0.4) - P(1) = 0$$

$$N_B = 2.941P$$

Thus, the friction $F_f = 0.4N_B = 0.4(2.941P) = 1.176P$.

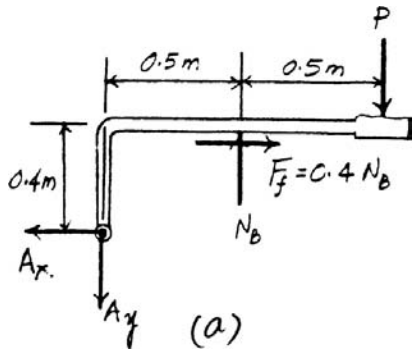

Principle of Impulse and Momentum: The mass moment inertia of the cylinder about its mass center is $I_O = \frac{1}{2}(12)(0.2^2) = 0.240\ \text{kg}\cdot\text{m}^2$. Applying Eq. 19–14, we have

$$I_O\omega_1 + \Sigma\int_{t_1}^{t_2} M_O\,dt = I_O\omega_2$$

$$(\circlearrowleft +) \qquad -0.240(20) + \left[-\left(1.176\int_0^t P\,dt\right)(0.2)\right] = 0 \qquad \textbf{(1)}$$

However, $\int_0^t P\,dt$ is the area under the $P-t$ graph. Assuming $t > 2$ s, then

$$\int_0^t P\,dt = \frac{1}{2}(5)(2) + 5(t-2) = (5t-5)\ \text{N}\cdot\text{s}$$

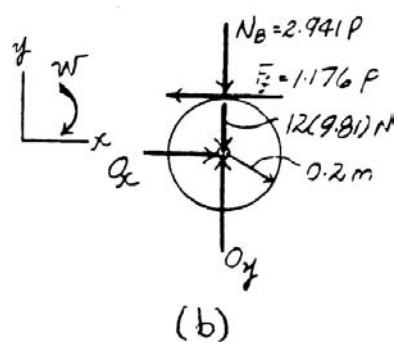

Substitute into Eq. (1) yields

$$-0.240(20) + [-1.176(5t-5)(0.2)] = 0$$

$$t = 5.08\ \text{s} \qquad \textbf{Ans.}$$

Since $t = 5.08$ s > 2 s, the above assumption is correct.

© 2010 Pearson Education, Inc., Upper Saddle River, NJ. All rights reserved. This material is protected under all copyright laws as they currently exist. No portion of this material may be reproduced, in any form or by any means, without permission in writing from the publisher.

19–15. The 1.25-lb tennis racket has a center of gravity at G and a radius of gyration about G of $k_G = 0.625$ ft. Determine the position P where the ball must be hit so that 'no sting' is felt by the hand holding the racket, i.e., the horizontal force exerted by the racket on the hand is zero.

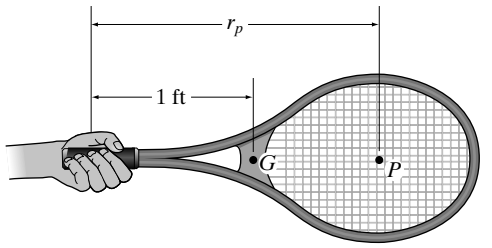

Principle of Impulse and Momentum: Here, we will assume that the tennis racket is initially at rest and rotates about point A with an angular velocity of ω immediately after it is hit by the ball, which exerts an impulse of $\int F dt$ on the racket, Fig. a. The mass moment of inertia of the racket about its mass center is $I_G = \left(\frac{1.25}{32.2}\right)\left(0.625^2\right) = 0.01516$ slug · ft^2. Since the racket about point A, $(v_G) = \omega r_G = \omega(1)$. Referring to Fig. b,

$$\overset{+}{\leftarrow} \quad m(v_G)_1 + \Sigma \int_{t_1}^{t_2} F_x\, dt = m(v_G)_2$$

$$0 + \int F dt = \left(\frac{1.25}{32.2}\right)\left[\omega(1)\right]$$

$$\int F dt = 0.03882\omega \qquad \textbf{(1)}$$

and

$$\circlearrowleft + \quad (H_A)_1 + \Sigma \int_{t_1}^{t_2} M_A\, dt = (H_A)_2$$

$$0 + \left(\int F dt\right) r_P = 0.01516\omega + \frac{1.25}{32.2}\left[\omega(1)\right](1)$$

$$\int F dt = \frac{0.05398\omega}{r_P} \qquad \textbf{(2)}$$

Equating Eqs. (1) and (2) yields

$$0.03882\omega = \frac{0.05398\omega}{r_P} \qquad r_P = 1.39 \text{ ft} \qquad \textbf{Ans.}$$

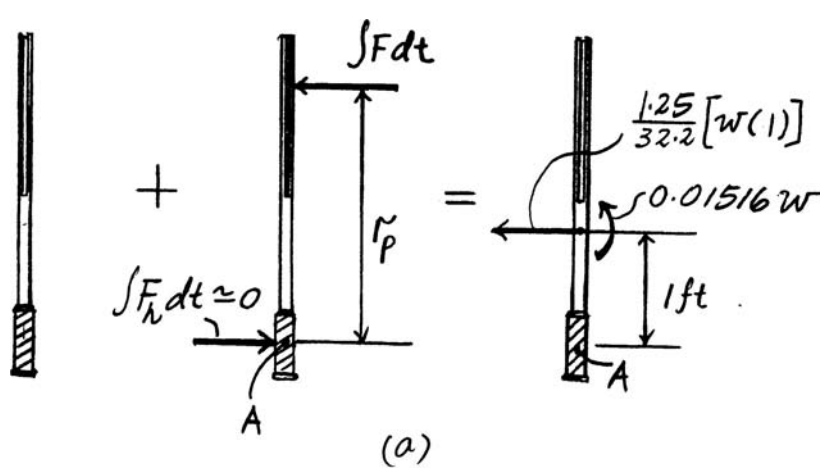

© 2010 Pearson Education, Inc., Upper Saddle River, NJ. All rights reserved. This material is protected under all copyright laws as they currently exist. No portion of this material may be reproduced, in any form or by any means, without permission in writing from the publisher.

***19–16.** If the boxer hits the 75-kg punching bag with an impulse of $I = 20\ \text{N}\cdot\text{s}$, determine the angular velocity of the bag immediately after it has been hit. Also, find the location d of point B, about which the bag appears to rotate. Treat the bag as a uniform cylinder.

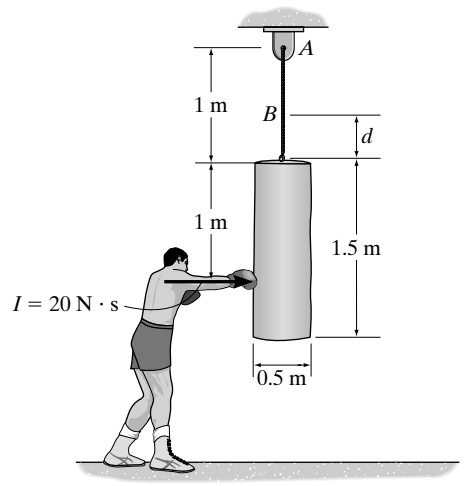

Principle of Impulse and Momentum: The mass moment of inertia of the bag about its mass center is $I_G = \frac{1}{12}m\left(3r^2 + h^2\right) = \frac{1}{12}(75)\left[3\left(0.25^2\right) + 1.5^2\right] = 15.23\ \text{kg}\cdot\text{m}^2$. Referring to the impulse and momentum diagrams of the bag shown in Fig. *a*,

$$(\overset{+}{\rightarrow}) \qquad m(v_G)_1 + \Sigma\int_{t_1}^{t_2} F_x\,dt = m\,(v_G)_2$$

$$0 + 20 = 75v_G \qquad\qquad v_G = 0.2667\ \text{m/s}$$

and

$$\circlearrowleft + \quad I_G\omega_1 + \Sigma\int_{t_1}^{t_2} M_G\,dt = I_G\omega_2$$

$$0 + 20(0.25) = 15.23\omega$$

$$\omega = 0.3282\ \text{rad/s} = 0.328\ \text{rad/s} \qquad \textbf{Ans.}$$

Kinematics: Referring to Fig. *b*,

$$v_G = \omega r_{G/IC}$$

$$0.2667 = 0.3282(0.75 + d)$$

$$d = 0.0625\ \text{m} \qquad \textbf{Ans.}$$

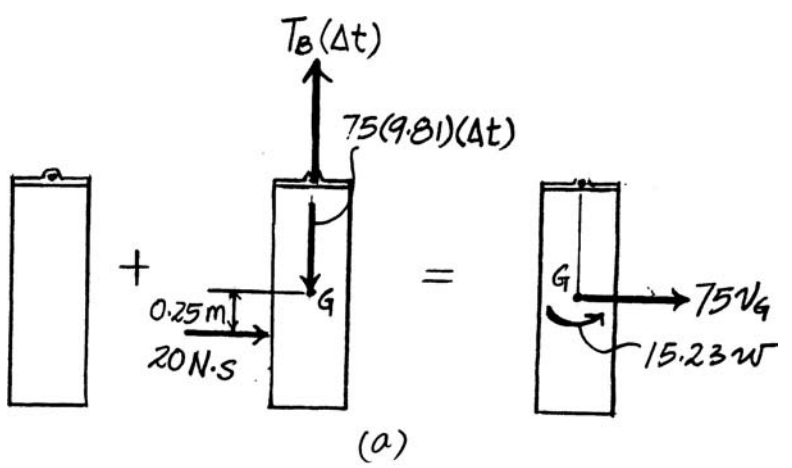

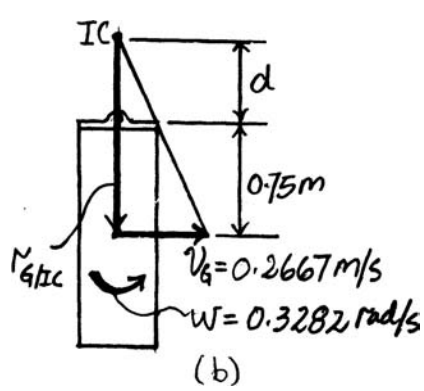

© 2010 Pearson Education, Inc., Upper Saddle River, NJ. All rights reserved. This material is protected under all copyright laws as they currently exist. No portion of this material may be reproduced, in any form or by any means, without permission in writing from the publisher.

•19–17. The 5-kg ball is cast on the alley with a backspin of $\omega_0 = 10$ rad/s, and the velocity of its center of mass O is $v_0 = 5$ m/s. Determine the time for the ball to stop back spinning, and the velocity of its center of mass at this instant. The coefficient of kinetic friction between the ball and the alley is $\mu_k = 0.08$.

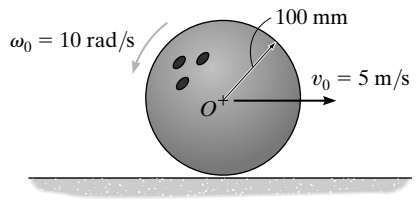

Principle of Impulse and Momentum: Since the ball slips, $F_f = \mu_k N = 0.08N$. The mass moment of inertia of the ball about its mass center is

$$I_O = \frac{2}{5}mr^2 = \frac{2}{5}(5)\left(0.1^2\right) = 0.02\ \text{kg}\cdot\text{m}^2$$

Referring to Fig. *a*,

$$(+\uparrow) \qquad m\left[(v_O)_y\right]_1 + \Sigma\int_{t_1}^{t_2} F_y\,dt = m\left[(v_O)_y\right]_2$$

$$0 + N(t) - 5(9.81)t = 0 \qquad\qquad N = 49.05\,\text{N}$$

$$\circlearrowleft + (H_A)_1 + \Sigma\int_{t_1}^{t_2} M_A\,dt = (H_A)_2$$

$$0.02(10) - 5(5)(0.1) + 0 = -5(v_O)_2(0.1)$$

$$(v_O)_2 = 4.6\ \text{m/s} \qquad \textbf{Ans.}$$

$$(\overset{+}{\rightarrow}) \qquad m\left[(v_O)_x\right]_1 + \Sigma\int_{t_1}^{t_2} F_x\,dt = m\left[(v_O)_x\right]_2$$

$$5(5) - 0.08(49.05)(t) = 5(4.6)$$

$$t = 0.510\ \text{s} \qquad \textbf{Ans.}$$

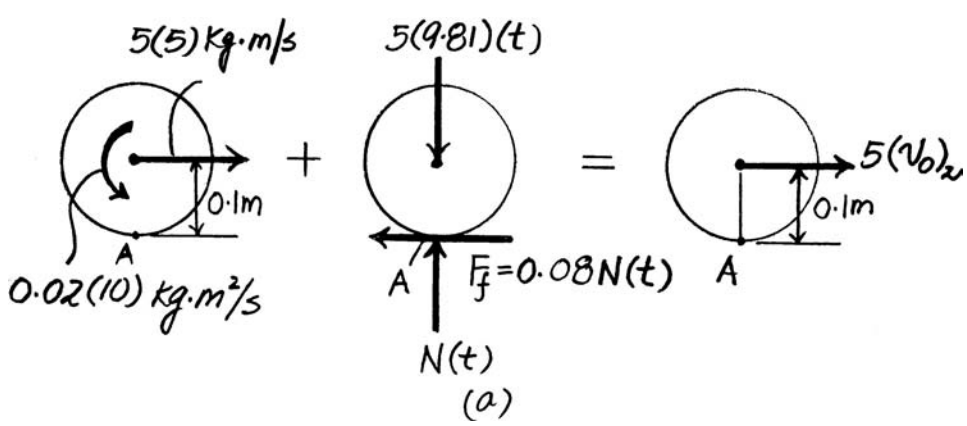

(a)

© 2010 Pearson Education, Inc., Upper Saddle River, NJ. All rights reserved. This material is protected under all copyright laws as they currently exist. No portion of this material may be reproduced, in any form or by any means, without permission in writing from the publisher.

19–18. The smooth rod assembly shown is at rest when it is struck by a hammer at A with an impulse of 10 N·s. Determine the angular velocity of the assembly and the magnitude of velocity of its mass center immediately after it has been struck. The rods have a mass per unit length of 6 kg/m.

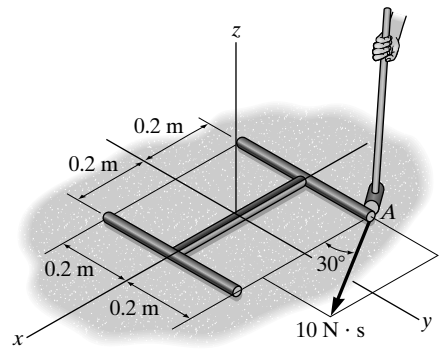

Principle of Impulse and Momentum: The total mass of the assembly is $m = 3[6(0.4)] = 7.2$ kg. The mass moment of inertia of the assembly about its mass center is

$$I_G = \frac{1}{12}[6(0.4)](0.4^2) + 2\left[\frac{1}{12}[6(0.4)](0.4^2) + 6(0.4)(0.2^2)\right] = 0.288 \text{ kg}\cdot\text{m}^2$$

Referring to Fig. b,

$$(+\downarrow) \qquad m(v_x)_1 + \Sigma\int_{t_1}^{t_2} F_x\,dt = m(v_x)_2$$

$$0 + 10\cos 30° = 7.2(v_G)_x \qquad (v_G)_x = 1.203 \text{ m/s}$$

$$(\overset{+}{\rightarrow}) \qquad m(v_y)_1 + \Sigma\int_{t_1}^{t_2} F_y\,dt = m(v_y)_2$$

$$0 + 10\sin 30° = 7.2(v_G)_y \qquad (v_G)_y = 0.6944 \text{ m/s}$$

Thus, the magnitude of $\mathbf{v}_G$ is

$$v_G = \sqrt{(v_G)_x^2 + (v_G)_y^2} = \sqrt{1.203^2 + 0.6944^2} = 1.39 \text{ m/s} \qquad \textbf{Ans.}$$

Also

$$\circlearrowleft + \qquad I_G\omega_1 + \Sigma\int_{t_1}^{t_2} M_G\,dt = I_G\omega_2$$

$$0 + [-10\cos 30°(0.2) - 10\sin 30°(0.2)] = -0.288\omega$$

$$\omega = 9.49 \text{ rad/s} \qquad \textbf{Ans.}$$

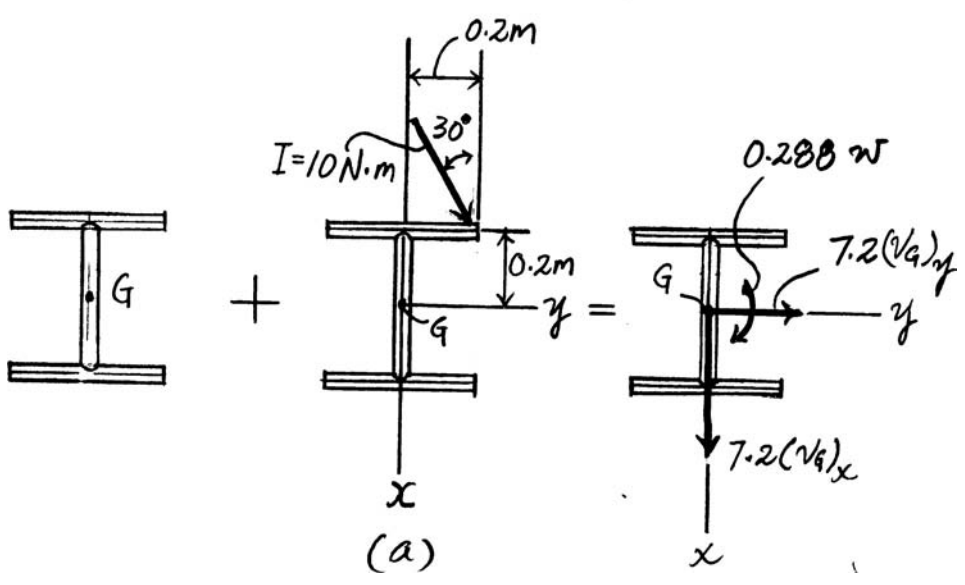

© 2010 Pearson Education, Inc., Upper Saddle River, NJ. All rights reserved. This material is protected under all copyright laws as they currently exist. No portion of this material may be reproduced, in any form or by any means, without permission in writing from the publisher.

19–19. The flywheel A has a mass of 30 kg and a radius of gyration of $k_C = 95$ mm. Disk B has a mass of 25 kg, is pinned at D, and is coupled to the flywheel using a belt which is subjected to a tension such that it does not slip at its contacting surfaces. If a motor supplies a counterclockwise torque or twist to the flywheel, having a magnitude of $M = (12t)$ N · m, where t is in seconds, determine the angular velocity of the disk 3 s after the motor is turned on. Initially, the flywheel is at rest.

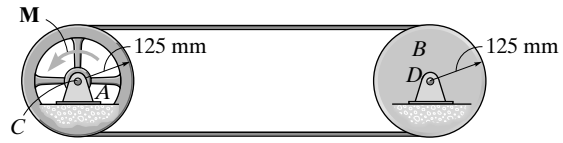

Principle of Impulse and Momentum: The mass moment inertia of the flywheel about point C is $I_C = 30(0.095^2) = 0.27075\ \text{kg}\cdot\text{m}^2$. Applying Eq. 19–14 to the flywheel [FBD(a)], we have

$$I_C\,\omega_1 + \Sigma \int_{t_1}^{t_2} M_C\,dt = I_C\,\omega_2$$

$$(\circlearrowleft +) \quad 0 + \int_0^{3\,\text{s}} 12t\,dt + [T_2\,(3)](0.125) - T_1\,(3)](0.125) = 0.27075\omega$$

$$54.0 + 0.375T_2 - 0.375T_1 = 0.27075\omega \qquad \textbf{(1)}$$

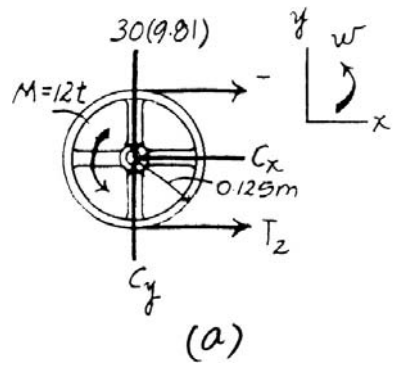

The mass moment inertia of the disk about point D is $I_D = \frac{1}{2}(25)\left(0.125^2\right) = 0.1953125\ \text{kg}\cdot\text{m}^2$. Applying Eq. 19–14 to the disk [FBD(b)], we have

$$I_D\,\omega_1 + \Sigma \int_{t_1}^{t_2} M_D\,dt = I_D\,\omega_2$$

$$(\circlearrowleft +) \quad 0 + \left[T_1\,(3)\right](0.125) - \left[T_2\,(3)\right](0.125) = 0.1953125\omega$$

$$0.375T_2 - 0.375T_1 = -0.1953125\omega \qquad \textbf{(2)}$$

Substitute Eq. (2) into Eq. (1) and solving yields

$$\omega = 116\ \text{rad/s} \qquad \textbf{Ans.}$$

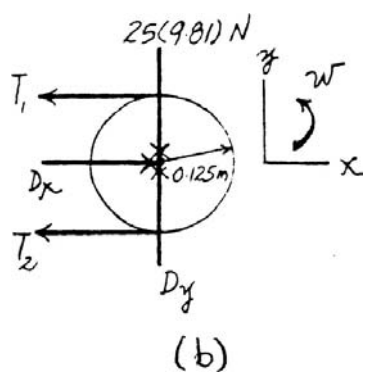

© 2010 Pearson Education, Inc., Upper Saddle River, NJ. All rights reserved. This material is protected under all copyright laws as they currently exist. No portion of this material may be reproduced, in any form or by any means, without permission in writing from the publisher.

***19–20.** The 30-lb flywheel A has a radius of gyration about its center of 4 in. Disk B weighs 50 lb and is coupled to the flywheel by means of a belt which does not slip at its contacting surfaces. If a motor supplies a counterclockwise torque to the flywheel of $M = (50t)$ lb · ft, where t is in seconds, determine the time required for the disk to attain an angular velocity of 60 rad/s starting from rest.

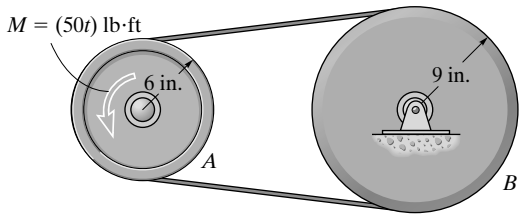

Principle of Impulse and Momentum: The mass moment inertia of the flywheel about point C is $I_C = \frac{30}{32.2}\left(\frac{4}{12}\right)^2 = 0.1035 \text{ slug} \cdot \text{ft}^2$. The angular velocity of the flywheel is $\omega_A = \frac{r_B}{r_A}\omega_B = \frac{0.75}{0.5}(60) = 90.0$ rad/s. Applying Eq. 19–14 to the flywheel [FBD(a)], we have

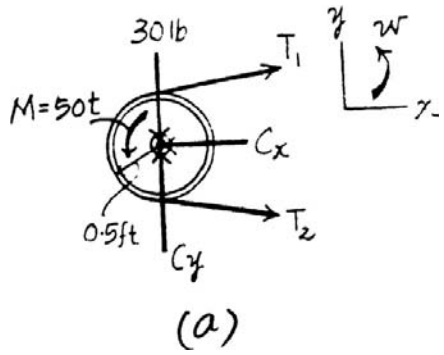

$$I_C\,\omega_1 + \Sigma\int_{t_1}^{t_2} M_C\,dt = I_C\,\omega_2$$

$$(\circlearrowleft +)\quad 0 + \int_0^t 50t\,dt + \left[\int T_2\,(dt)\right](0.5) - \left[\int T_1(dt)\right](0.5) = 0.1035(90)$$

$$25t^2 + 0.5\int (T_2 - T_1)dt = 9.317 \qquad \textbf{(1)}$$

The mass moment inertia of the disk about point D is $I_D = \frac{1}{2}\left(\frac{50}{32.2}\right)(0.75^2) = 0.4367 \text{ slug} \cdot \text{ft}^2$. Applying Eq. 19–14 to the disk [FBD(b)], we have

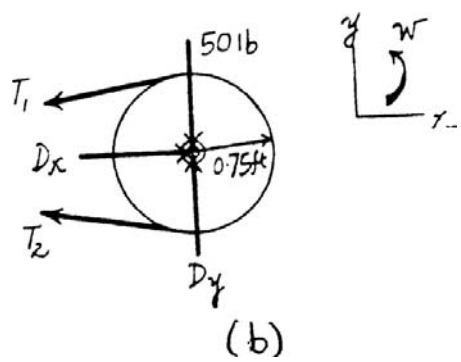

$$I_D\,\omega_1 + \Sigma\int_{t_1}^{t_2} M_D\,dt = I_D\,\omega_2$$

$$(\circlearrowleft +)\qquad 0 + \left[\int T_1\,(dt)\right](0.75) - \left[\int T_2\,(dt)\right](0.75) = 0.4367(60)$$

$$\int (T_2 - T_1)dt = -34.94 \qquad \textbf{(2)}$$

Substitute Eq. (2) into Eq. (1) and solving yields

$$t = 1.04 \text{ s} \qquad \textbf{Ans.}$$

© 2010 Pearson Education, Inc., Upper Saddle River, NJ. All rights reserved. This material is protected under all copyright laws as they currently exist. No portion of this material may be reproduced, in any form or by any means, without permission in writing from the publisher.

•19–21. For safety reasons, the 20-kg supporting leg of a sign is designed to break away with negligible resistance at B when the leg is subjected to the impact of a car. Assuming that the leg is pinned at A and approximates a thin rod, determine the impulse the car bumper exerts on it, if after the impact the leg appears to rotate clockwise to a maximum angle of $\theta_{max} = 150°$.

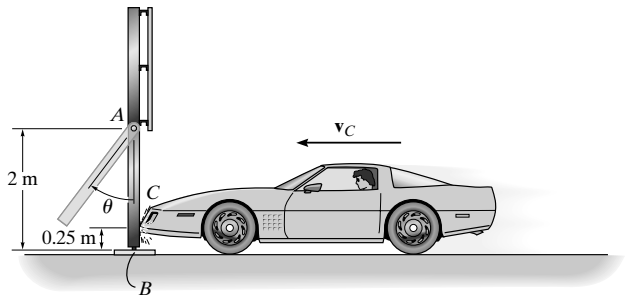

$$(+\circlearrowleft) \qquad I_A\omega_1 + \Sigma\int_{t_1}^{t_2} M_A\,dt = I_A\omega_2$$

$$0 + I(1.75) = \left[\frac{1}{3}(20)(2)^2\right]\omega_2$$

$$\omega_2 = 0.065625I$$

$$T_2 + V_2 = T_3 + V_3$$

$$\frac{1}{2}\left[\frac{1}{3}(20)(2)^2\right](0.065625I)^2 + 20(9.81)(-1) = 0 + 20(9.81)(1\sin 60°)$$

$$I = 79.8\ \text{N}\cdot\text{s} \qquad \textbf{Ans.}$$

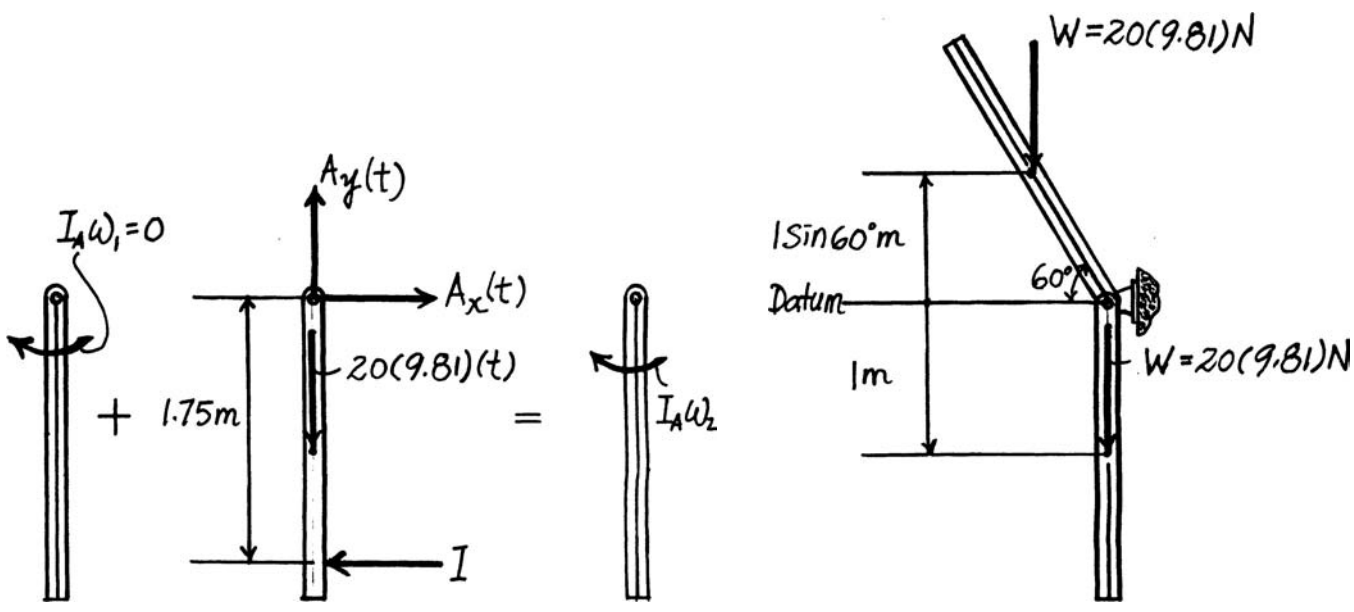

© 2010 Pearson Education, Inc., Upper Saddle River, NJ. All rights reserved. This material is protected under all copyright laws as they currently exist. No portion of this material may be reproduced, in any form or by any means, without permission in writing from the publisher.

19–22. The slender rod has a mass m and is suspended at its end A by a cord. If the rod receives a horizontal blow giving it an impulse **I** at its bottom B, determine the location y of the point P about which the rod appears to rotate during the impact.

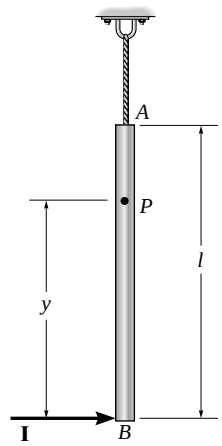

Principle of Impulse and Momentum:

$(\circlearrowleft +)$ $$I_G\omega_1 + \Sigma\int_{t_1}^{t_2} M_G\,dt = I_G\,\omega_2$$

$$0 + I\left(\frac{l}{2}\right) = \left[\frac{1}{12}ml^2\right]\omega \qquad I = \frac{1}{6}ml\omega$$

$(\overset{+}{\rightarrow})$ $$m(v_{Ax})_1 + \Sigma\int_{t_1}^{t_2} F_x\,dt = m(v_{Ax})_2$$

$$0 + \frac{1}{6}ml\omega = mv_G \qquad v_G = \frac{l}{6}\omega$$

Kinematics: Point P is the IC.

$$v_B = \omega\,y$$

Using similar triangles,

$$\frac{\omega\,y}{y} = \frac{\frac{l}{6}\omega}{y - \frac{l}{2}} \qquad y = \frac{2}{3}l$$ **Ans.**

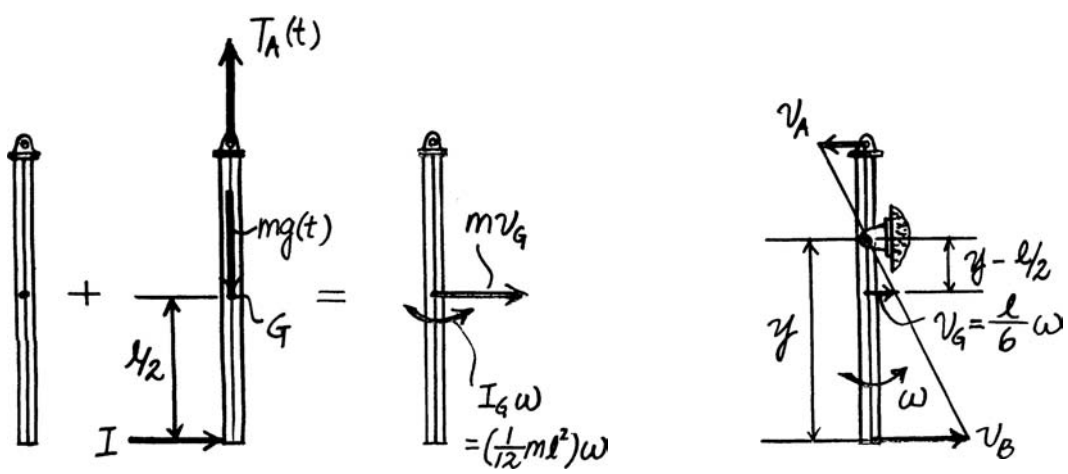

© 2010 Pearson Education, Inc., Upper Saddle River, NJ. All rights reserved. This material is protected under all copyright laws as they currently exist. No portion of this material may be reproduced, in any form or by any means, without permission in writing from the publisher.

19–23. The 25-kg circular disk is attached to the yoke by means of a smooth axle A. Screw C is used to lock the disk to the yoke. If the yoke is subjected to a torque of $M = (5t^2)\ \mathrm{N \cdot m}$, where t is in seconds, and the disk is unlocked, determine the angular velocity of the yoke when $t = 3$ s, starting from rest. Neglect the mass of the yoke.

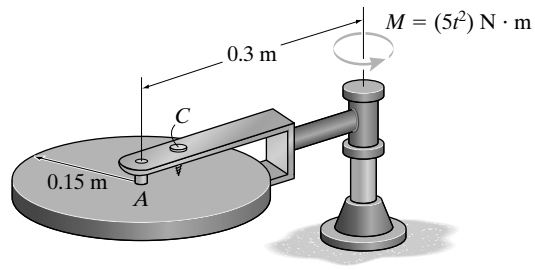

Principle of Angular Momentum: Since the disk is not rigidly attached to the yoke, only the linear momentum of its mass center contributes to the angular momentum about point O. Here, the yoke rotates about the fixed axis, thus $v_A = \omega r_{OA} = \omega(0.3)$. Referring to Fig. a,

$$\circlearrowleft + \quad (H_O)_1 + \Sigma \int_{t_1}^{t_2} M_O dt = (H_O)_2$$

$$0 + \int_0^{3\,\mathrm{s}} 5t^2 dt = 25\big[\omega(0.3)\big](0.3)$$

$$\left.\frac{5t^3}{3}\right|_0^{3\,\mathrm{s}} = 2.25\omega$$

$$\omega = 20\ \mathrm{rad/s} \qquad \textbf{Ans.}$$

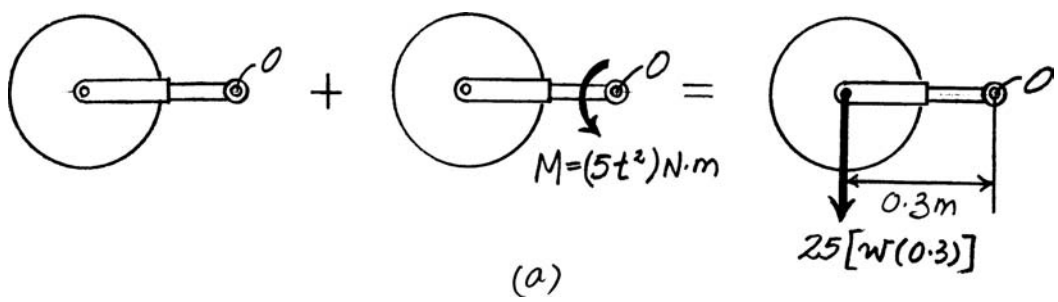

(a)

© 2010 Pearson Education, Inc., Upper Saddle River, NJ. All rights reserved. This material is protected under all copyright laws as they currently exist. No portion of this material may be reproduced, in any form or by any means, without permission in writing from the publisher.

***19–24.** The 25-kg circular disk is attached to the yoke by means of a smooth axle A. Screw C is used to lock the disk to the yoke. If the yoke is subjected to a torque of $M = (5t^2)\ \mathrm{N \cdot m}$, where t is in seconds, and the disk is locked, determine the angular velocity of the yoke when $t = 3$ s, starting from rest. Neglect the mass of the yoke.

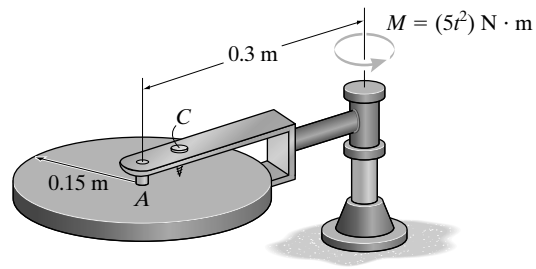

Principle of Angular Momentum: The mass moment of inertia of the disk about its mass center is $I_A = \frac{1}{2}mr^2 = \frac{1}{2}(25)\left(0.15^2\right) = 0.28125\ \mathrm{kg \cdot m^2}$. Since the yoke rotates about a fixed axis, $v_A = \omega r_{OA} = \omega(0.3)$. Referring to Fig. *a*,

$$\circlearrowleft + \qquad (H_O)_1 + \Sigma \int_{t_1}^{t_2} M_O\, dt = (H_O)_2$$

$$0 + \int_0^{3\ \mathrm{s}} 5t^2 dt = 0.28125\omega + 25\left[\omega(0.3)\right](0.3)$$

$$\left.\frac{5t^3}{3}\right|_0^{3\ \mathrm{s}} = 2.53125\omega$$

$$\omega = 17.8\ \mathrm{rad/s} \qquad \textbf{Ans.}$$

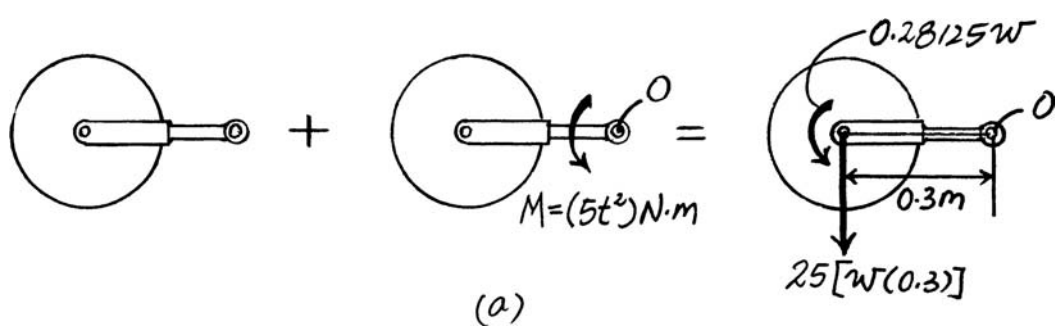

(a)

© 2010 Pearson Education, Inc., Upper Saddle River, NJ. All rights reserved. This material is protected under all copyright laws as they currently exist. No portion of this material may be reproduced, in any form or by any means, without permission in writing from the publisher.

•19–25. If the shaft is subjected to a torque of $M = (15t^2)\ \mathrm{N \cdot m}$, where t is in seconds, determine the angular velocity of the assembly when $t = 3$ s, starting from rest. Rods AB and BC each have a mass of 9 kg.

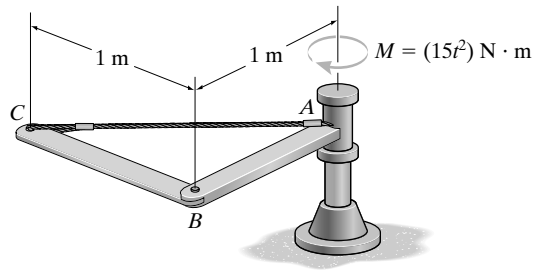

Principle of Impulse and Momentum: The mass moment of inertia of the rods about their mass center is $I_G = \frac{1}{12}ml^2 = \frac{1}{12}(9)\left(1^2\right) = 0.75\ \mathrm{kg \cdot m^2}$. Since the assembly rotates about the fixed axis, $(v_G)_{AB} = \omega(r_G)_{AB} = \omega(0.5)$ and $(v_G)_{BC} = \omega(r_G)_{BC} = \omega\left(\sqrt{1^2 + (0.5)^2}\right) = \omega(1.118)$. Referring to Fig. a,

$$\circlearrowleft + \qquad (H_z)_1 + \Sigma \int_{t_1}^{t_2} M_z\, dt = (H_z)_2$$

$$0 + \int_0^{3\,\mathrm{s}} 15t^2 dt = 9\left[\omega(0.5)\right](0.5) + 0.75\omega + 9\left[\omega(1.118)\right](1.118) + 0.75\omega$$

$$5t^3\Big|_0^{3\,\mathrm{s}} = 15\omega$$

$$\omega = 9\ \mathrm{rad/s} \qquad \textbf{Ans.}$$

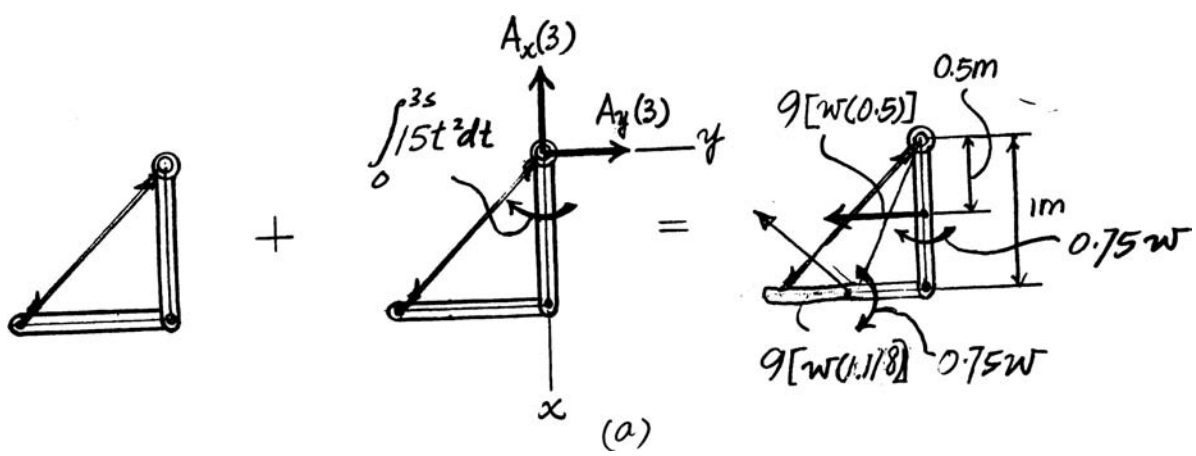

© 2010 Pearson Education, Inc., Upper Saddle River, NJ. All rights reserved. This material is protected under all copyright laws as they currently exist. No portion of this material may be reproduced, in any form or by any means, without permission in writing from the publisher.

19–26. The body and bucket of a skid steer loader has a weight of 2000 lb, and its center of gravity is located at G. Each of the four wheels has a weight of 100 lb and a radius of gyration about its center of gravity of 1 ft. If the engine supplies a torque of $M = 100\ \text{lb}\cdot\text{ft}$ to each of the rear drive wheels, determine the speed of the loader in $t = 10$ s, starting from rest. The wheels roll without slipping.

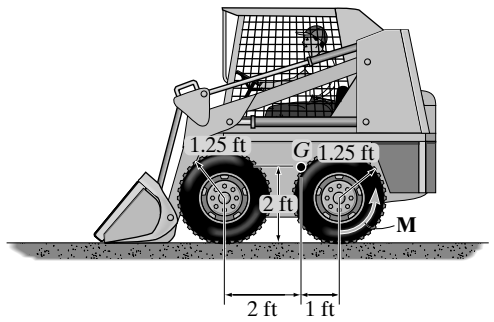

Principle of Impulse and Momentum. The mass moment of inertia of the wheels about their mass center are $I_A = I_B = 2mk^2 = 2\left(\frac{100}{32.2}\right)(1^2) = 6.211\ \text{slug}\cdot\text{ft}^2$. Since the wheels roll without slipping, $\omega = \frac{v}{r} = \frac{v}{1.25} = 0.8v$. From Figs. *a, b,* and *c,*

$$\circlearrowleft + \quad (H_C)_1 + \Sigma\int_{t_1}^{t_2} M_C\,dt = (H_C)_2$$

$$0 + 2(100)(10) - A_x(10)(1.25) = 6.211(0.8v) + 2\left[\left(\frac{100}{32.2}\right)v\right](1.25)$$

$$A_x = 160 - 1.019v \qquad \textbf{(1)}$$

and

$$\circlearrowright + \quad (H_D)_1 + \Sigma\int_{t_1}^{t_2} M_D\,dt = (H_D)_2$$

$$0 + B_x(10)(1.25) = 6.211(0.8v) + 2\left[\left(\frac{100}{32.2}\right)v\right](1.25)$$

$$B_x = 1.019v \qquad \textbf{(2)}$$

From Fig. *d,*

$$\left(\overset{+}{\leftarrow}\right) \quad m\left[(v_G)_x\right]_1 + \Sigma\int_{t_1}^{t_2} F_x\,dt = m\left[(v_G)_x\right]_2$$

$$0 + A_x(10) - B_x(10) = \left(\frac{2000}{32.2}\right)v \qquad \textbf{(3)}$$

Substituting Eqs. (1) and (2) into Eq. (3),

$$(160 - 1.019v)(10) - 1.019v(10) = \left(\frac{2000}{32.2}\right)v$$

$$v = 19.4\ \text{ft/s} \qquad \textbf{Ans.}$$

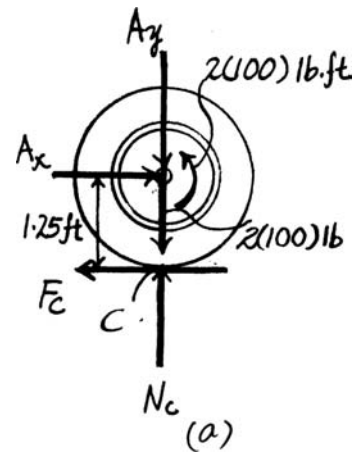

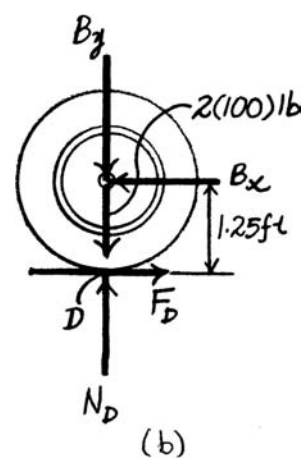

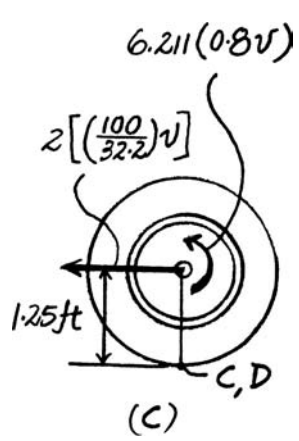

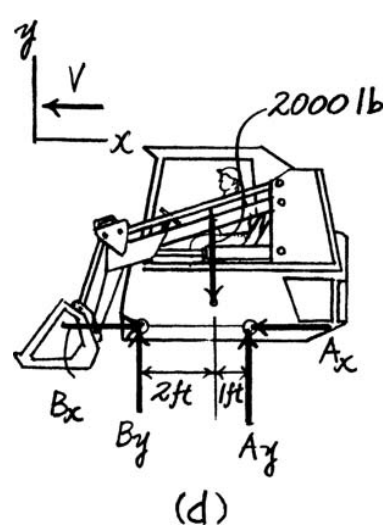

© 2010 Pearson Education, Inc., Upper Saddle River, NJ. All rights reserved. This material is protected under all copyright laws as they currently exist. No portion of this material may be reproduced, in any form or by any means, without permission in writing from the publisher.

19–27. The body and bucket of a skid steer loader has a weight of 2000 lb, and its center of gravity is located at G. Each of the four wheels has a weight of 100 lb and a radius of gyration about its center of gravity of 1 ft. If the loader attains a speed of 20 ft/s in 10 s, starting from rest, determine the torque **M** supplied to each of the rear drive wheels. The wheels roll without slipping.

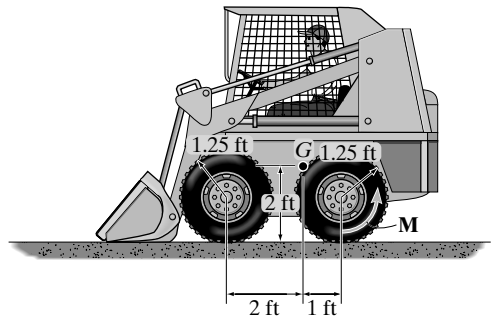

Principle of Impulse and Momentum: The mass momentum of inertia of the wheels about their mass centers are $I_A = I_B = 2mk^2 = 2\left(\frac{100}{32.2}\right)(1^2) = 6.211 \text{ slug}\cdot\text{ft}^2$.

Since the wheels roll without slipping, $\omega = \frac{v}{r} = \frac{20}{1.25} = 16$ rad/s. From Figs. *a, b,* and *c*,

$$\circlearrowleft + \quad (H_C)_1 + \Sigma \int_{t_1}^{t_2} M_C\, dt = (H_C)_2$$

$$0 + 2M(10) - A_x(10)(1.25) = 6.211(16) + 2\left[\frac{100}{32.2}(20)\right](1.25)$$

$$A_x = 1.6M - 20.37 \qquad \textbf{(1)}$$

and

$$\circlearrowright + \quad (H_D)_1 + \Sigma \int_{t_1}^{t_2} M_D\, dt = (H_D)_2$$

$$0 + B_x(10)(1.25) = 6.211(16) + 2\left[\frac{100}{32.2}(20)\right](1.25)$$

$$B_x = 20.37 \text{ lb} \qquad \textbf{(2)}$$

From Fig. *d*,

$$\left(\overset{+}{\leftarrow}\right) \quad m\left[(v_G)_x\right]_1 + \Sigma \int_{t_1}^{t_2} F_x\, dt = m\left[(v_G)_x\right]_2$$

$$0 + A_x(10) - B_x(10) = \frac{2000}{32.2}(20) \qquad \textbf{(3)}$$

Substituting Eqs. (1) and (2) into Eq. (3),

$$(1.6M - 20.37)(10) - 20.37(10) = \frac{2000}{32.2}(20)$$

$$M = 103 \text{ lb}\cdot\text{ft} \qquad \textbf{Ans.}$$

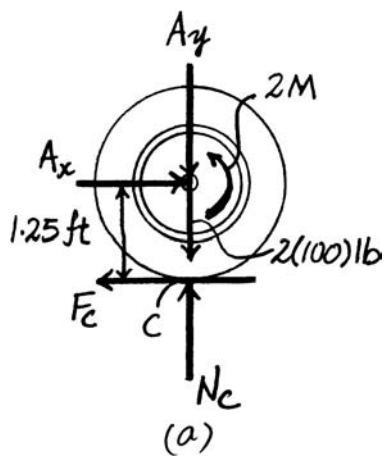

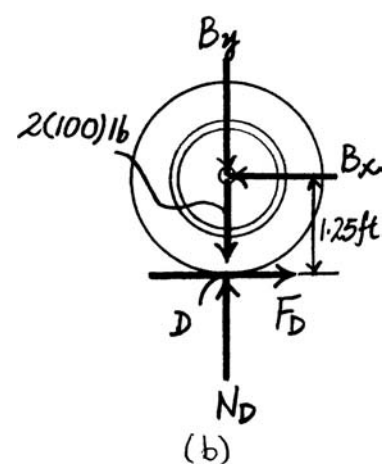

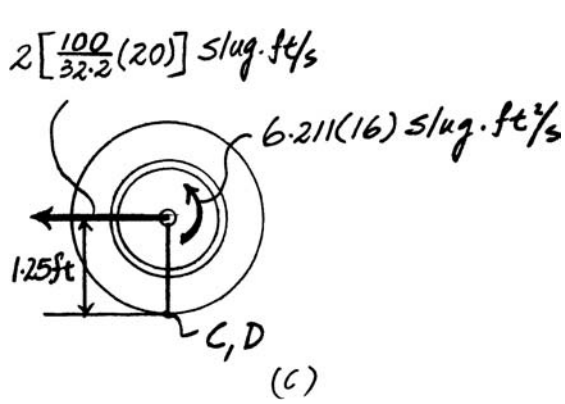

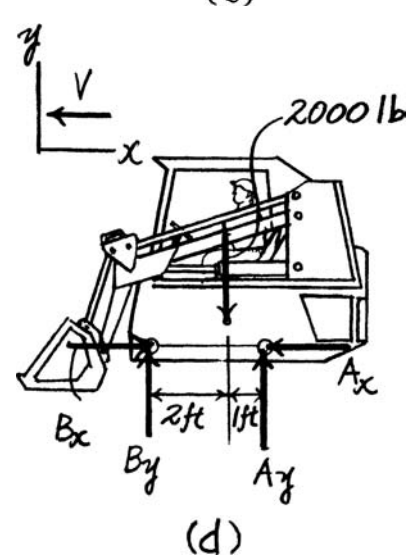

© 2010 Pearson Education, Inc., Upper Saddle River, NJ. All rights reserved. This material is protected under all copyright laws as they currently exist. No portion of this material may be reproduced, in any form or by any means, without permission in writing from the publisher.

***19–28.** The two rods each have a mass m and a length l, and lie on the smooth horizontal plane. If an impulse **I** is applied at an angle of 45° to one of the rods at midlength as shown, determine the angular velocity of each rod just after the impact. The rods are pin connected at B.

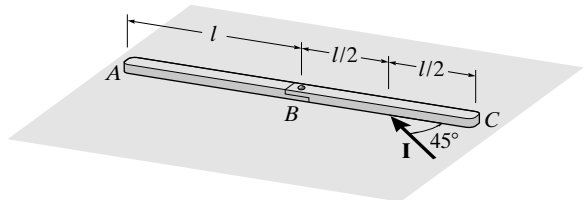

Bar BC:

$$(\circlearrowleft +) \qquad (H_G)_1 + \Sigma \int M_G\, dt = (H_G)_2$$

$$0 + \int B_y\, dt \left(\frac{l}{2}\right) = I_G\, \omega_{BC} \qquad \textbf{(1)}$$

$$(+\uparrow) \qquad m(v_{Gy})_1 + \Sigma \int F_y\, dt = m(v_{Gy})_2$$

$$0 - \int B_y\, dt + I \sin 45° = m(v_G)_y \qquad \textbf{(2)}$$

Bar AB:

$$(\circlearrowleft +) \qquad (H_{G'})_1 + \Sigma \int M_{G'}\, dt = (H_{G'})_2$$

$$0 + \int B_y\, dt \left(\frac{l}{2}\right) = I_G\, \omega_{AB} \qquad \textbf{(3)}$$

$$(+\uparrow) \qquad m(v_{Gy})_1 + \Sigma \int F_y\, dt = m(v_{Gy})_2$$

$$0 + \int B_y\, dt = m(v_{G'})_y \qquad \textbf{(4)}$$

$$\mathbf{v}_B = \mathbf{v}_{G'} + \mathbf{v}_{B/G'} = \mathbf{v}_G + \mathbf{v}_{B/G}$$

$$(+\uparrow) \qquad v_{By} = (v_{G'})_y + \omega_{AB}\left(\frac{l}{2}\right) = (v_G)_y - \omega_{BC}\left(\frac{l}{2}\right) \qquad \textbf{(5)}$$

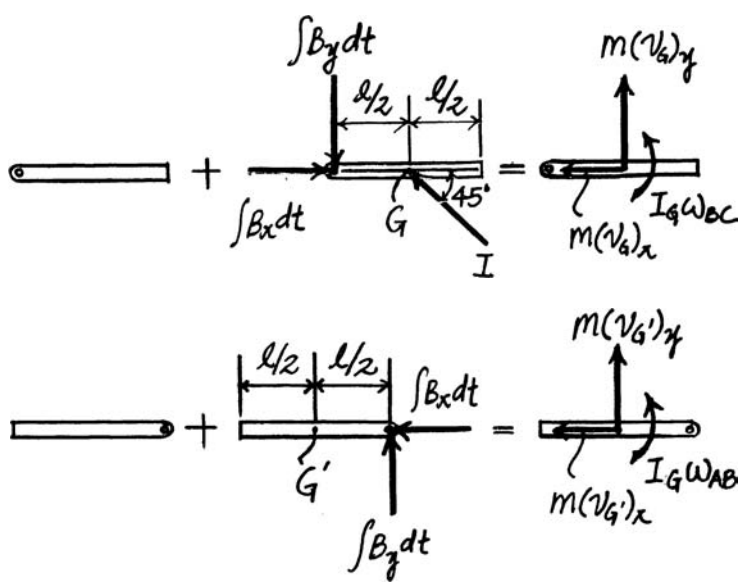

© 2010 Pearson Education, Inc., Upper Saddle River, NJ. All rights reserved. This material is protected under all copyright laws as they currently exist. No portion of this material may be reproduced, in any form or by any means, without permission in writing from the publisher.

***19–28. Continued**

Eliminate $\int B_y\, dt$ from Eqs. (1) and (2), from Eqs. (3) and (4), and between Eqs. (1) and (3). This yields

$$I_G\,\omega_{BC} = \frac{l}{2}\left(I \sin 45^\circ - m(v_G)_y\right)$$

$$m(v_G)_y\left(\frac{l}{2}\right) = I_G\,\omega_{AB}$$

$$\omega_{BC} = \omega_{AB}$$

Substituting into Eq. (5),

$$\frac{1}{m}\left(\frac{2}{l}\right)I_G\,\omega_{AB} + \omega_{AB}\left(\frac{l}{2}\right) = -\left[I_G\left(\frac{\omega_{AB}}{m}\right)\left(\frac{2}{l}\right)\right] + \frac{I}{m}\sin 45^\circ - \omega_{AB}\left(\frac{l}{2}\right)$$

$$\left(\frac{4}{ml}\right)I_G\omega_{AB} + \omega_{AB}\,l = \frac{I}{m}\sin 45^\circ$$

$$\left(\frac{4}{ml}\right)\left(\frac{1}{12}ml^2\right)\omega_{AB} + \omega_{AB}\,l = \frac{I}{m}\sin 45^\circ$$

$$\frac{4}{3}\,\omega_{AB}\,I = \frac{I}{m}\sin 45^\circ$$

$$\omega_{AB} = \omega_{BC} = \frac{3}{4\sqrt{2}}\left(\frac{I}{ml}\right) \qquad \textbf{Ans.}$$

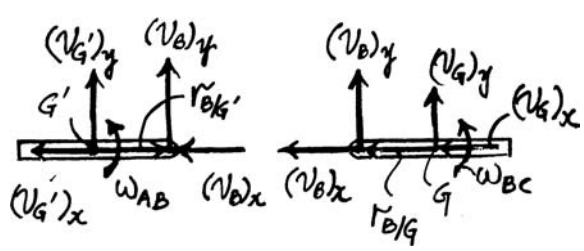

© 2010 Pearson Education, Inc., Upper Saddle River, NJ. All rights reserved. This material is protected under all copyright laws as they currently exist. No portion of this material may be reproduced, in any form or by any means, without permission in writing from the publisher.

•19–29. The car strikes the side of a light pole, which is designed to break away from its base with negligible resistance. From a video taken of the collision it is observed that the pole was given an angular velocity of 60 rad/s when AC was vertical. The pole has a mass of 175 kg, a center of mass at G, and a radius of gyration about an axis perpendicular to the plane of the pole assembly and passing through G of $k_G = 2.25$ m. Determine the horizontal impulse which the car exerts on the pole at the instant AC is essentially vertical.

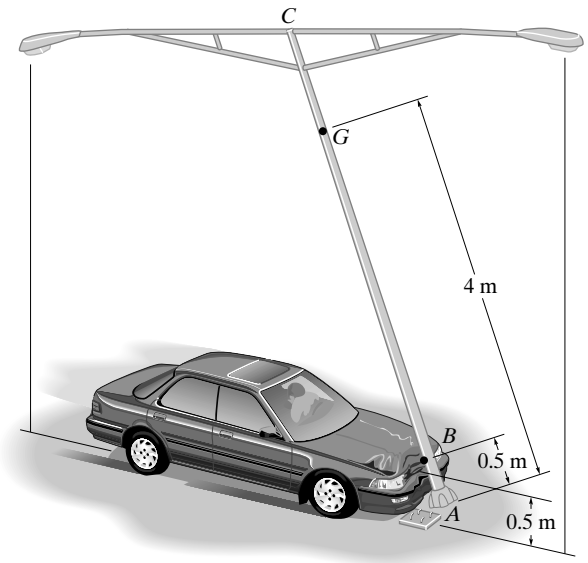

$$(\circlearrowleft +) \qquad (H_G)_1 + \Sigma \int M_G\, dt = (H_G)_2$$

$$0 + \left[\int F\, dt\right](3.5) = 175(2.25)^2\,(60)$$

$$\int F\, dt = 15.2\ \text{kN}\cdot\text{s}$$

Ans.

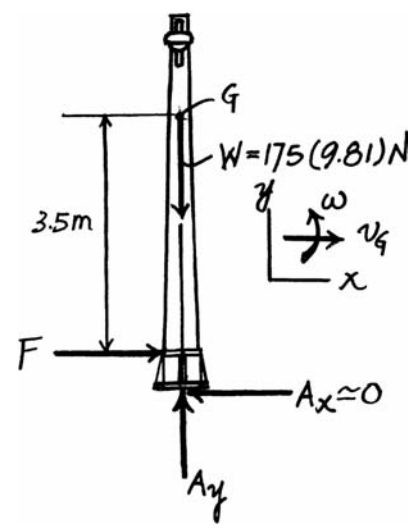

© 2010 Pearson Education, Inc., Upper Saddle River, NJ. All rights reserved. This material is protected under all copyright laws as they currently exist. No portion of this material may be reproduced, in any form or by any means, without permission in writing from the publisher.

19–30. The frame of the roller has a mass of 5.5 Mg and a center of mass at G. The roller has a mass of 2 Mg and a radius of gyration about its mass center of $k_A = 0.45$ m. If a torque of $M = 600\ \text{N}\cdot\text{m}$ is applied to the rear wheels, determine the speed of the compactor in $t = 4$ s, starting from rest. No slipping occurs. Neglect the mass of the driving wheels.

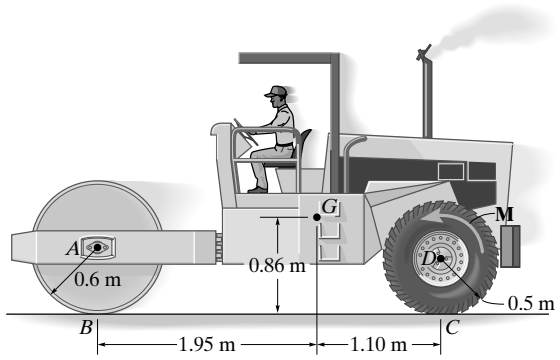

Driving Wheels: (mass is neglected)

$$\circlearrowleft + \Sigma M_D = 0; \qquad 600 - F_C(0.5) = 0$$

$$F_C = 1200\ \text{N}$$

Frame and driving wheels:

$$\left(\overset{+}{\leftarrow}\right) \qquad m(v_{Gx})_1 + \Sigma \int F_x\, dt = m(v_{Gx})_2$$

$$0 + 1200(4) - A_x(4) = 5500 v_G$$

$$A_x = 12\,00 - 1375 v_G \qquad \textbf{(1)}$$

Roller:

$$v_G = v_A = 0.6\omega$$

$$(\circlearrowleft +) \qquad (H_B)_1 + \Sigma \int M_B\, dt = (H_B)_2$$

$$0 + A_x(4)(0.6) = \left[2000(0.45)^2\right]\left(\frac{v_G}{0.6}\right) + \left[2000(v_G)\right](0.6)$$

$$A_x = 781.25 v_G \qquad \textbf{(2)}$$

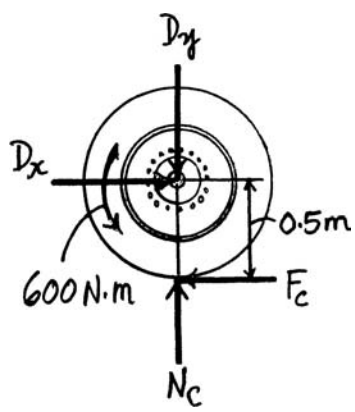

Solving Eqs. (1) and (2):

$$A_x = 435\ \text{N}$$

$$v_G = 0.557\ \text{m/s} \qquad \textbf{Ans.}$$

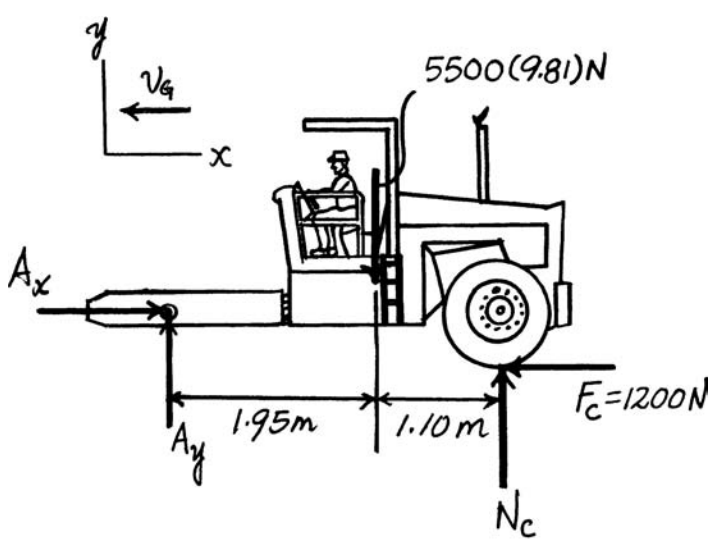

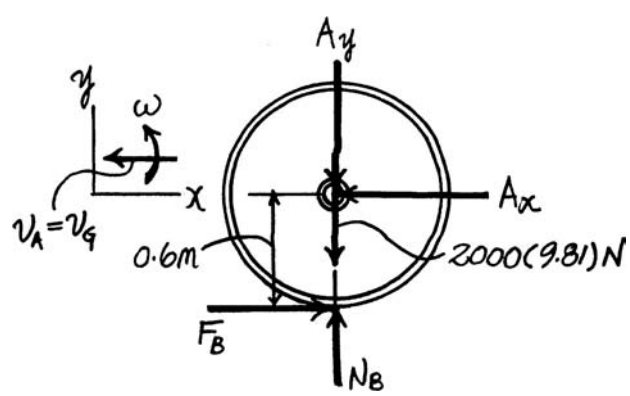

© 2010 Pearson Education, Inc., Upper Saddle River, NJ. All rights reserved. This material is protected under all copyright laws as they currently exist. No portion of this material may be reproduced, in any form or by any means, without permission in writing from the publisher.

19–31. The 200-kg satellite has a radius of gyration about the centroidal z axis of $k_z = 1.25$ m. Initially it is rotating with a constant angular velocity of $\boldsymbol{\omega}_0 = \{1500\,\mathbf{k}\}$ rev/min. If the two jets A and B are fired simultaneously and produce a thrust of $T = (5e^{-0.1t})$ kN, where t is in seconds, determine the angular velocity of the satellite, five seconds after firing.

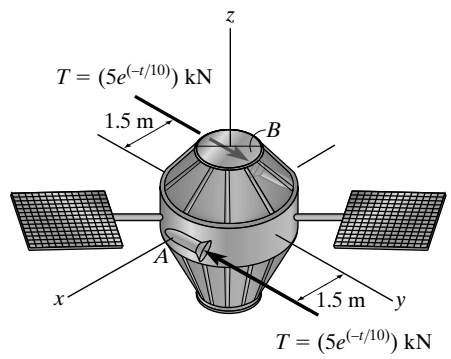

Principle of Angular Impulse and Momentum: The mass moment of inertia of the satellite about its centroidal z axis is $I_z = mk_z^2 = 200\left(1.25^2\right) = 312.5\ \text{kg}\cdot\text{m}^2$. The initial angular velocity of the satellite is $\omega_1 = \left(1500\,\frac{\text{rev}}{\text{min}}\right)\left(\frac{2\pi\,\text{rad}}{1\ \text{rev}}\right)\left(\frac{1\ \text{min}}{60\ \text{s}}\right) = 50\pi$ rad/s. Applying the angular impulse and momentum equation about the z axis,

$$I_z\omega_1 + \Sigma\int_{t_1}^{t_2} M_z\,dt = I_z\omega_2$$

$$312.5(50\pi) - \left[2\int_0^{5\,\text{s}} 5000e^{-0.1t}(1.5)dt\right] = 312.5\omega_2$$

$$15625\pi + \left(150\,000e^{-0.1t}\right)\Big|_0^{5\,\text{s}} = 312.5\omega_2$$

Thus,

$$\omega_2 = [-31.8\mathbf{k}]\ \text{rad/s}$$ **Ans.**

***19–32.** If the shaft is subjected to a torque of $M = (30e^{-0.1t})$ N·m, where t is in seconds, determine the angular velocity of the assembly when $t = 5$ s, starting from rest. The rectangular plate has a mass of 25 kg. Rods AC and BC have the same mass of 5 kg.

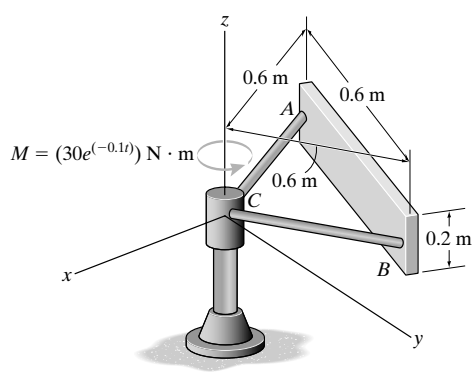

Principle of Angular Impulse and Momentum: The mass moment of inertia of the assembly about the z axis is $I_z = 2\left[\frac{1}{3}(5)\left(0.6^2\right)\right] + \left[\frac{1}{12}(25)\left(0.6^2\right) + 25(0.6\sin 60°)^2\right] = 8.70\ \text{kg}\cdot\text{m}^2$. Using the free-body diagram of the assembly shown in Fig. *a*,

$$\circlearrowleft + I_z\omega_1 + \Sigma\int_{t_1}^{t_2} M_z\,dt = I_z\omega_2$$

$$0 + \int_0^{5\,\text{s}} 30e^{-0.1t}dt = 8.70\omega_2$$

$$\left(-300e^{-0.1t}\right)\Big|_0^{5\,\text{s}} = 8.70\omega_2$$

Thus,

$$\omega_2 = 13.6\ \text{rad/s}$$ **Ans.**

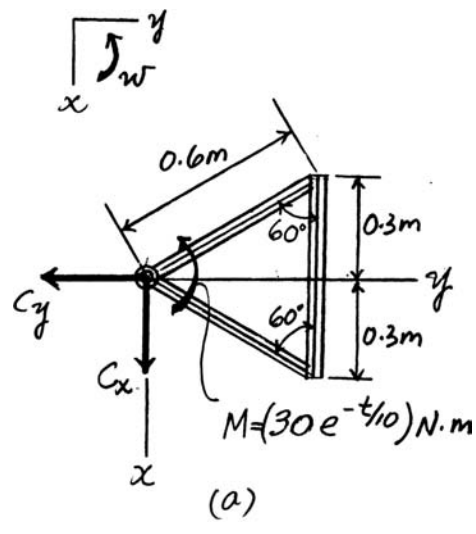

© 2010 Pearson Education, Inc., Upper Saddle River, NJ. All rights reserved. This material is protected under all copyright laws as they currently exist. No portion of this material may be reproduced, in any form or by any means, without permission in writing from the publisher.

•19–33. The 75-kg gymnast lets go of the horizontal bar in a fully stretched position A, rotating with an angular velocity of $\omega_A = 3$ rad/s. Estimate his angular velocity when he assumes a tucked position B. Assume the gymnast at positions A and B as a uniform slender rod and a uniform circular disk, respectively.

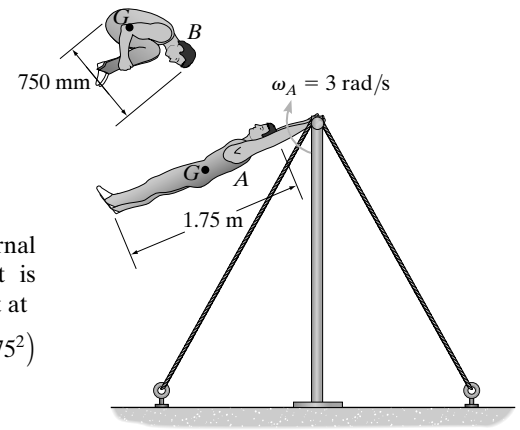

Conservation of Angular Momentum: Other than the weight, there is no external impulse during the motion. Thus, the angular momentum of the gymnast is conserved about his mass center G. The mass moments of inertia of the gymnast at the fully-stretched and tucked positions are $(I_A)_G = \frac{1}{12}ml^2 = \frac{1}{12}(75)\left(1.75^2\right) = 19.14\ \text{kg}\cdot\text{m}^2$ and $(I_B)_G = \frac{1}{2}mr^2 = \frac{1}{2}(75)\left(0.375^2\right) = 5.273\ \text{kg}\cdot\text{m}^2$. Thus,

$$(H_A)_G = (H_B)_G$$

$$19.14(3) = 5.273\omega_B$$

$$\omega_B = 10.9\ \text{rad/s} \qquad \textbf{Ans.}$$

19–34. A 75-kg man stands on the turntable A and rotates a 6-kg slender rod over his head. If the angular velocity of the rod is $\omega_r = 5$ rad/s measured relative to the man and the turntable is observed to be rotating in the opposite direction with an angular velocity of $\omega_t = 3$ rad/s, determine the radius of gyration of the man about the z axis. Consider the turntable as a thin circular disk of 300-mm radius and 5-kg mass.

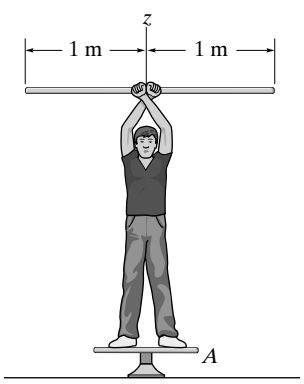

Conservation of Angular Momentum: The mass moment of inertia of the rod about the z axis is $(I_r)_z = \frac{1}{12}ml^2 = \frac{1}{12}(6)\left(2^2\right) = 2\ \text{kg}\cdot\text{m}^2$ and the mass moment of inertia of the man and the turntable about the z axis is $(I_m)_z = \frac{1}{2}(5)\left(0.3^2\right) + 75k_z^2 = 0.225 + 75k_z^2$. Since no external angular impulse acts on the system, the angular momentum of the system is conserverved about the z axis.

$$\left(H_z\right)_1 = \left(H_z\right)_2$$

$$0 = 2(\omega_r) - \left(0.225 + 75k_z^2\right)(3)$$

$$\omega_r = \omega_m + lm$$

$$\omega_r = -3 + 5 = 2\ \text{rad/s}$$

$$2(2) = \left(0.225 + 75k_z^2\right)3$$

$$k_z = 0.122\ \text{m} \qquad \textbf{Ans.}$$

© 2010 Pearson Education, Inc., Upper Saddle River, NJ. All rights reserved. This material is protected under all copyright laws as they currently exist. No portion of this material may be reproduced, in any form or by any means, without permission in writing from the publisher.

19–35. A horizontal circular platform has a weight of 300 lb and a radius of gyration $k_z = 8$ ft about the z axis passing through its center O. The platform is free to rotate about the z axis and is initially at rest. A man having a weight of 150 lb begins to run along the edge in a circular path of radius 10 ft. If he maintains a speed of 4 ft/s relative to the platform, determine the angular velocity of the platform. Neglect friction.

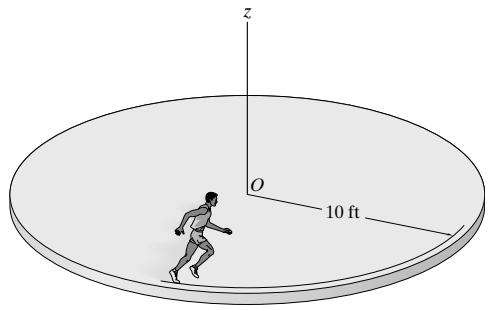

$$\mathbf{v}_m = \mathbf{v}_p + \mathbf{v}_{m/p}$$

$\left(\overset{+}{\rightarrow}\right)$ $\quad v_m = -10\omega + 4$

$(\circlearrowleft +)$ $\quad (H_z)_1 = (H_z)_2$

$$0 = -\left(\frac{300}{32.2}\right)(8)^2\,\omega + \left(\frac{150}{32.2}\right)(-10\omega + 4)(10)$$

$\omega = 0.175$ rad/s **Ans.**

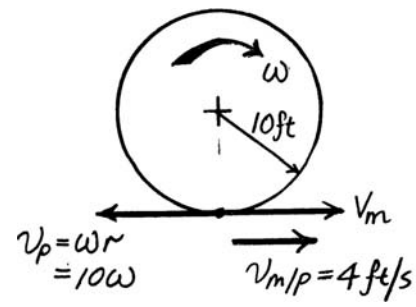

***19–36.** A horizontal circular platform has a weight of 300 lb and a radius of gyration $k_z = 8$ ft about the z axis passing through its center O. The platform is free to rotate about the z axis and is initially at rest. A man having a weight of 150 lb throws a 15-lb block off the edge of the platform with a horizontal velocity of 5 ft/s, *measured relative to the platform*. Determine the angular velocity of the platform if the block is thrown (a) tangent to the platform, along the $+t$ axis, and (b) outward along a radial line, or $+n$ axis. Neglect the size of the man.

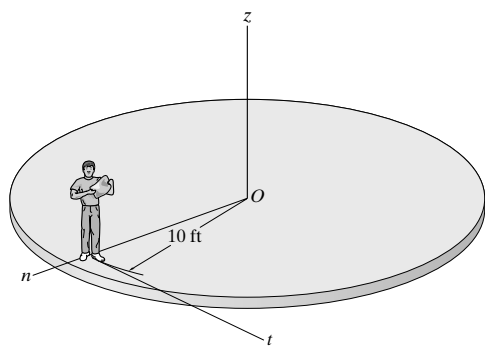

a) $\quad (H_z)_1 = (H_z)_2$

$$0 + 0 = \left(\frac{15}{32.2}\right)(v_b)(10) - \left(\frac{300}{32.2}\right)(8)^2\,\omega - \left(\frac{150}{32.2}\right)(10\omega)(10)$$

$$v_b = 228\omega$$

$$\mathbf{v}_b = \mathbf{v}_m + \mathbf{v}_{b/m}$$

$\left(\overset{+}{\rightarrow}\right)$ $\quad v_b = -10\omega + 5$

$228\omega = -10\omega + 5$

$\omega = 0.0210$ rad/s **Ans.**

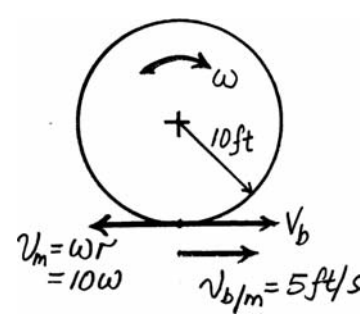

b) $\quad (H_z)_1 = (H_z)_2$

$$0 + 0 = 0 - \left(\frac{300}{32.2}\right)(8)^2\,\omega - \left(\frac{150}{32.2}\right)(10\omega)(10)$$

$\omega = 0$ **Ans.**

© 2010 Pearson Education, Inc., Upper Saddle River, NJ. All rights reserved. This material is protected under all copyright laws as they currently exist. No portion of this material may be reproduced, in any form or by any means, without permission in writing from the publisher.

•19–37. The man sits on the swivel chair holding two 5-lb weights with his arms outstretched. If he is rotating at 3 rad/s in this position, determine his angular velocity when the weights are drawn in and held 0.3 ft from the axis of rotation. Assume he weighs 160 lb and has a radius of gyration $k_z = 0.55$ ft about the z axis. Neglect the mass of his arms and the size of the weights for the calculation.

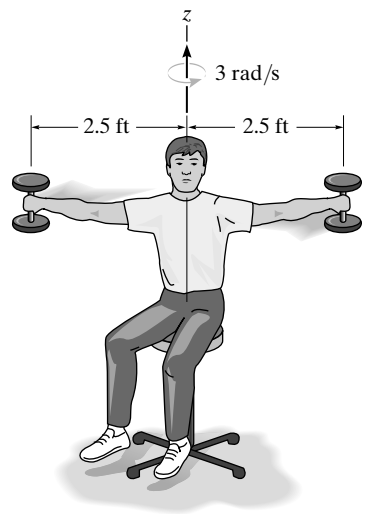

Mass Moment of Inertia: The mass moment inertia of the man and the weights about z axis when the man arms are fully stretched is

$$(I_z)_1 = \left(\frac{160}{32.2}\right)\left(0.55^2\right) + 2\left[\frac{5}{32.2}\left(2.5^2\right)\right] = 3.444 \text{ slug}\cdot\text{ft}^2$$

The mass moment inertia of the man and the weights about z axis when the weights are drawn in to a distance 0.3 ft from z axis

$$(I_z)_2 = \left(\frac{160}{32.2}\right)\left(0.55^2\right) + 2\left[\frac{5}{32.2}\left(0.3^2\right)\right] = 1.531 \text{ slug}\cdot\text{ft}^2$$

Conservation of Angular Momentum: Applying Eq. 19–17, we have

$$(H_z)_1 = (H_z)_2$$

$$3.444(3) = 1.531(\omega_z)_2$$

$$(\omega_z)_2 = 6.75 \text{ rad/s} \qquad \textbf{Ans.}$$

19–38. The satellite's body C has a mass of 200 kg and a radius of gyration about the z axis of $k_z = 0.2$ m. If the satellite rotates about the z axis with an angular velocity of 5 rev/s, when the solar panels A and B are in a position of $\theta = 0°$, determine the angular velocity of the satellite when the solar panels are rotated to a position of $\theta = 90°$. Consider each solar panel to be a thin plate having a mass of 30 kg. Neglect the mass of the rods.

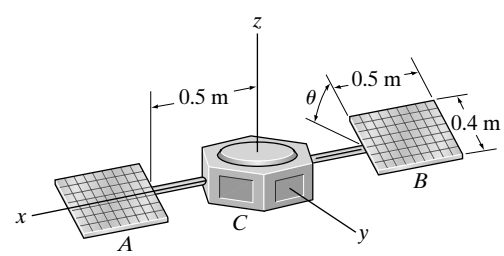

Conservation of Angular Momentum: When $\theta = 0°$ and $\theta = 90°$, the mass momentum of inertia of the satellite are

$$(I_z)_1 = 200\left(0.2^2\right) + 2\left[\frac{1}{12}(30)\left(0.5^2 + 0.4^2\right) + 30\left(0.75^2\right)\right]$$

$$= 43.8 \text{ kg}\cdot\text{m}^2$$

$$(I_z)_2 = 200\left(0.2^2\right) + 2\left[\frac{1}{12}(30)\left(0.5^2\right) + 30\left(0.75^2\right)\right]$$

$$= 43 \text{ kg}\cdot\text{m}^2$$

Thus,

$$(H_z)_1 = (H_z)_2$$

$$(I_z)_1\,\omega_1 = (I_z)_2\,\omega_2$$

$$43.8(5) = 43\omega_2$$

$$\omega_2 = 5.09 \text{ rev/s} \qquad \textbf{Ans.}$$

© 2010 Pearson Education, Inc., Upper Saddle River, NJ. All rights reserved. This material is protected under all copyright laws as they currently exist. No portion of this material may be reproduced, in any form or by any means, without permission in writing from the publisher.

19–39. A 150-lb man leaps off the circular platform with a velocity of $v_{m/p} = 5$ ft/s, relative to the platform. Determine the angular velocity of the platform afterwards. Initially the man and platform are at rest. The platform weighs 300 lb and can be treated as a uniform circular disk.

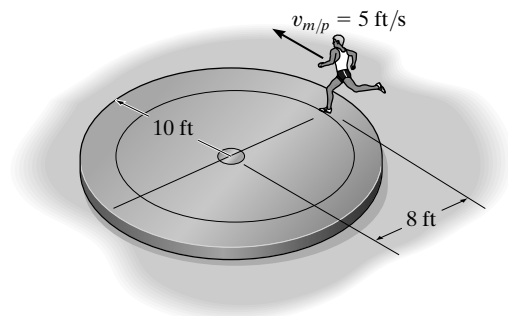

Kinematics: Since the platform rotates about a fixed axis, the speed of point P on the platform to which the man leaps is $v_P = \omega r = \omega(8)$. Applying the relative velocity equation,

$$v_m = v_P + v_{m/P}$$

$$(+\uparrow) \qquad v_m = -\omega(8) + 5 \qquad \textbf{(1)}$$

Conservation of Angular Momentum: As shown in Fig. b, the impulse $\int F dt$ generated during the leap is internal to the system. Thus, angular momentum of the system is conserved about the axis perpendicular to the page passing through point O. The mass moment of inertia of the platform about this axis is

$$I_O = \frac{1}{2} mr^2 = \frac{1}{2}\left(\frac{300}{32.2}\right)\left(10^2\right) = 465.84 \text{ slug} \cdot \text{ft}^2$$

Then

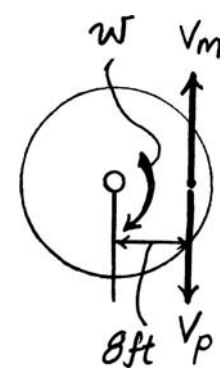

$$(H_O)_1 = (H_O)_2$$

$$0 = \left(\frac{150}{32.2} v_m\right)(8) - 465.84\omega$$

$$v_m = 12.5\omega \qquad \textbf{(2)}$$

Solving Eqs. (1) and (2) yields

$$\omega = 0.244 \text{ rad/s} \qquad \textbf{Ans.}$$

$$v_m = 3.05 \text{ ft/s}$$

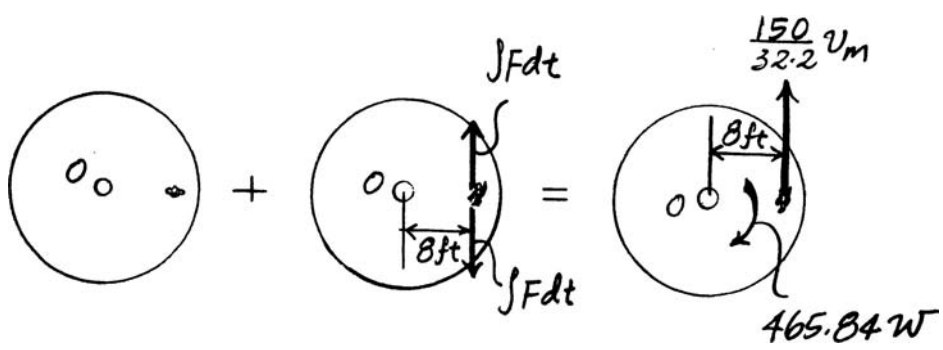

© 2010 Pearson Education, Inc., Upper Saddle River, NJ. All rights reserved. This material is protected under all copyright laws as they currently exist. No portion of this material may be reproduced, in any form or by any means, without permission in writing from the publisher.

***19–40.** The 150-kg platform can be considered as a circular disk. Two men, A and B, of 60-kg and 75-kg mass, respectively, stand on the platform when it is at rest. If they start to walk around the circular paths with speeds of $v_{A/p} = 1.5$ m/s and $v_{B/p} = 2$ m/s, measured relative to the platform, determine the angular velocity of the platform.

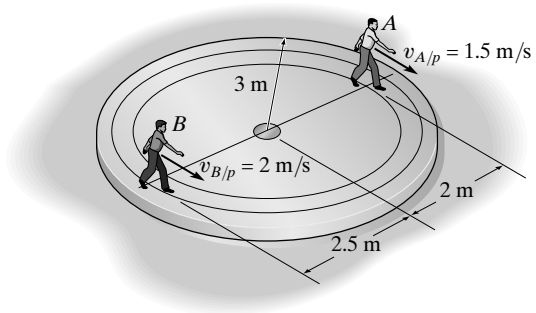

Kinematics: Since the platform rotates about a fixed axis, the speed of points P and P' on the platform at which men B and A are located is $v_P = \omega r_P = \omega(2.5)$ and $v_{P'} = \omega r_{P'} = \omega(2)$. Applying the relative velocity equation,

$$\mathbf{v}_B = \mathbf{v}_P + v_{B/P}$$

$$(+\downarrow) \qquad v_B = -\omega(2.5) + 2 \qquad \textbf{(1)}$$

and

$$\mathbf{v}_A = \mathbf{v}_{P'} + \mathbf{v}_{A/P'}$$

$$(+\downarrow) \qquad v_B = \omega(2) + 1.5 \qquad \textbf{(2)}$$

Conservation of Angular Momentum: As shown in Fig. b, the impulses $\int F_A\,dt$ and $\int F_B\,dt$ are internal to the system. Thus, angular momentum of the system is conserved about the axis perpendicular to the page passing through point O. The mass moment of inertia of the platform about this axis is $I_O = \frac{1}{2}mr^2 = \frac{1}{2}(150)(3^2) = 675\ \text{kg}\cdot\text{m}^2$. Then

$$(H_O)_1 = (H_O)_2$$

$$0 = 75v_B(2.5) - 60v_A(2) - 675\omega \qquad \textbf{(3)}$$

Substituting Eqs. (1) and (2) into Eq. (3),

$$0 = 75(-2.5\omega + 2)(2.5) - 60(2\omega + 1.5)(2) - 675\omega$$

$$\omega = 0.141\ \text{rad/s} \qquad \textbf{Ans.}$$

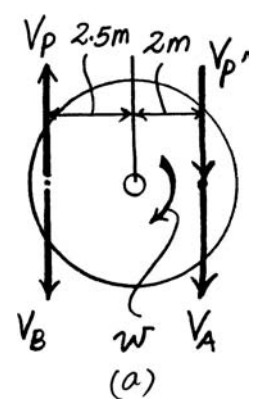

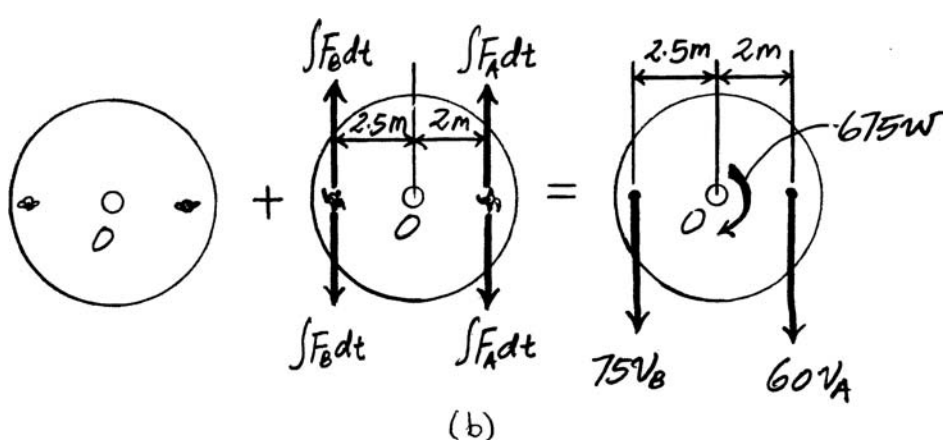

© 2010 Pearson Education, Inc., Upper Saddle River, NJ. All rights reserved. This material is protected under all copyright laws as they currently exist. No portion of this material may be reproduced, in any form or by any means, without permission in writing from the publisher.

•19–41. Two children A and B, each having a mass of 30 kg, sit at the edge of the merry-go-round which rotates at $\omega = 2$ rad/s. Excluding the children, the merry-go-round has a mass of 180 kg and a radius of gyration $k_z = 0.6$ m. Determine the angular velocity of the merry-go-round if A jumps off horizontally in the $-n$ direction with a speed of 2 m/s, measured relative to the merry-go-round. What is the merry-go-round's angular velocity if B then jumps off horizontally in the $-t$ direction with a speed of 2 m/s, measured relative to the merry-go-round? Neglect friction and the size of each child.

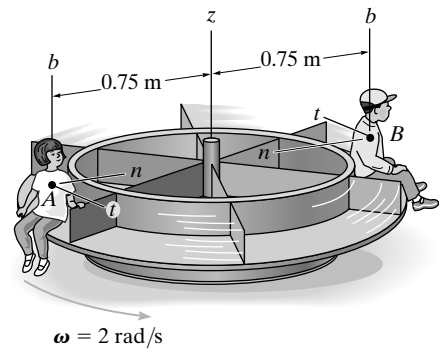

Mass Moment of Inertia: The mass moment inertia of the merry-go-round about the z axis when both children are still on it is

$$(I_z)_1 = 180\left(0.6^2\right) + 2\left[30\left(0.75^2\right)\right] = 98.55 \text{ kg}\cdot\text{m}^2$$

The mass moment inertia of the merry-go-round about z axis when child A jumps off

$$(I_z)_2 = 180\left(0.6^2\right) + 30\left(0.75^2\right) = 81.675 \text{ kg}\cdot\text{m}^2$$

The mass moment inertia of the merry-go-round about z axis when both children jump off

$$(I_z)_3 = 180\left(0.6^2\right) + 0 = 64.80 \text{ kg}\cdot\text{m}^2$$

Conservation of Angular Momentum: When child A jumps off in the $-n$ direction, applying Eq. 19–17, we have

$$(H_z)_1 = (H_z)_2$$

$$(I_z)_1\,\omega_1 = (I_z)_2\,\omega_2$$

$$98.55(2) = 81.675\omega_2$$

$$\omega_2 = 2.413 \text{ rad/s} = 2.41 \text{ rad/s} \qquad \textbf{Ans.}$$

Subsequently, when child B jumps off from the merry-go-round in the $-t$ direction, applying Eq. 19–17, we have

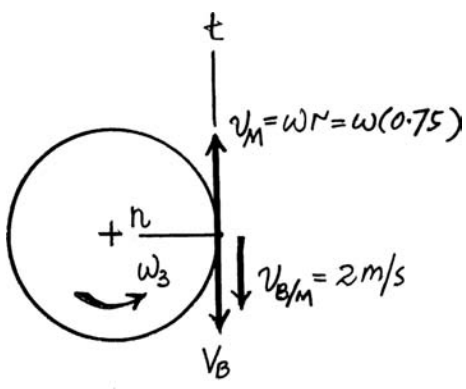

$$(H_z)_2 = (H_z)_3$$

$$(I_z)_2\,\omega_2 = (I_z)_3\,\omega_3 - (m_B\,v_B)(0.75)$$

$$81.675(2.413) = 64.80\omega_3 - 30v_B\,(0.75) \qquad \textbf{(1)}$$

Relative Velocity: The speed of a point located on the edge of the merry-go-round at the instant child B jumps off is $v_M = \omega_3\,(0.75)$.

$$v_B = -v_M + v_{B/M} = -\omega_3\,(0.75) + 2 \qquad \textbf{(2)}$$

Substituting Eq. (2) into Eq. (1) and solving yields

$$\omega_3 = 2.96 \text{ rad/s} \qquad \textbf{Ans.}$$

© 2010 Pearson Education, Inc., Upper Saddle River, NJ. All rights reserved. This material is protected under all copyright laws as they currently exist. No portion of this material may be reproduced, in any form or by any means, without permission in writing from the publisher.

19–42. A thin square plate of mass m rotates on the smooth surface with an angular velocity ω_1. Determine its new angular velocity just after the hook at its corner strikes the peg P and the plate starts to rotate about P without rebounding.

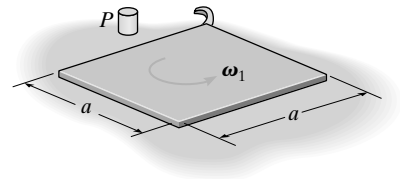

Mass Moment of Inertia: The mass moment inertia of the thin plate about the z axis passing through its mass center is

$$(I_z)_G = \frac{1}{12}(m)\left(a^2 + a^2\right) = \frac{1}{6}ma^2$$

The mass moment inertia of the thin plate about z axis passing through peg P is

$$(I_z)_P = \frac{1}{12}(m)\left(a^2 + a^2\right) + m\left[\sqrt{\left(\frac{a}{2}\right)^2 + \left(\frac{a}{2}\right)^2}\right]^2 = \frac{2}{3}ma^2$$

Conservation of Angular Momentum: Applying Eq. 19–17, we have

$$H_G = H_P$$

$$\left(\frac{1}{6}ma^2\right)\omega_1 = \left(\frac{2}{3}ma^2\right)\omega_2$$

$$\omega_2 = \frac{1}{4}\omega_1 \qquad \textbf{Ans.}$$

© 2010 Pearson Education, Inc., Upper Saddle River, NJ. All rights reserved. This material is protected under all copyright laws as they currently exist. No portion of this material may be reproduced, in any form or by any means, without permission in writing from the publisher.

19–43. A ball having a mass of 8 kg and initial speed of $v_1 = 0.2$ m/s rolls over a 30-mm-long depression. Assuming that the ball rolls off the edges of contact first A, then B, without slipping, determine its final velocity $\mathbf{v}_2$ when it reaches the other side.

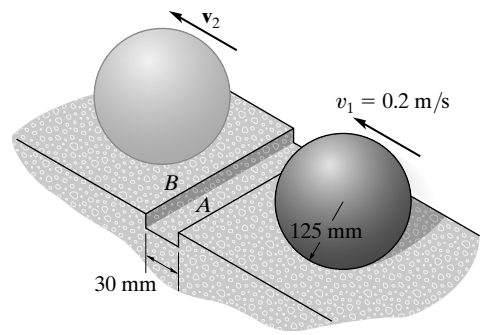

$$\omega_1 = \frac{0.2}{0.125} = 1.6 \text{ rad/s} \qquad \omega_2 = \frac{v_2}{0.125} = 8v_2$$

$$\theta = \sin^{-1}\left(\frac{15}{125}\right) = 6.8921°$$

$$h = 125 - 125\cos 6.8921° = 0.90326 \text{ mm}$$

$$T_1 + V_1 = T_2 + V_2$$

$$\frac{1}{2}(8)(0.2)^2 + \frac{1}{2}\left[\frac{2}{5}(8)(0.125)^2\right](1.6)^2 + 0$$

$$= -(0.90326)(10^{-3})8(9.81) + \frac{1}{2}(8)\omega^2(0.125)^2 + \frac{1}{2}\left[\frac{2}{5}(8)(0.125)^2\right](\omega)^2$$

$$\omega = 1.836 \text{ rad/s}$$

$$(H_B)_2 = (H_B)_3$$

$$\left[\frac{2}{5}(8)(0.125)^2\right](1.836) + 8(1.836)(0.125)\cos 6.892°(0.125\cos 6.892°)$$

$$- 8(0.22948\sin 6.892°)(0.125\sin 6.892°)$$

$$= \left[\frac{2}{5}(8)(0.125)^2\right]\omega_3 + 8(0.125)\omega_3(0.125)$$

$$\omega_3 = 1.7980 \text{ rad/s}$$

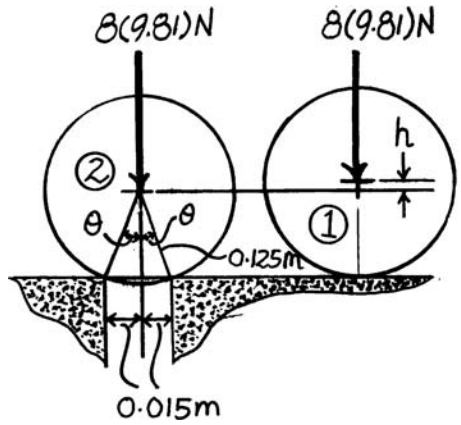

$$T_3 + V_3 = T_4 + V_4$$

$$\frac{1}{2}\left[\frac{2}{5}(8)(0.125)^2\right](1.7980)^2 + \frac{1}{2}(8)(1.7980)^2(0.125)^2 + 0$$

$$= 8(9.81)(0.90326(10^{-3})) + \frac{1}{2}\left[\frac{2}{5}(8)(0.125)^2\right](\omega_4)^2$$

$$+ \frac{1}{2}(8)(\omega_4)^2(0.125)^2$$

$$\omega_4 = 1.56 \text{ rad/s}$$

So that

$$v_2 = 1.56(0.125) = 0.195 \text{ m/s} \qquad \textbf{Ans.}$$

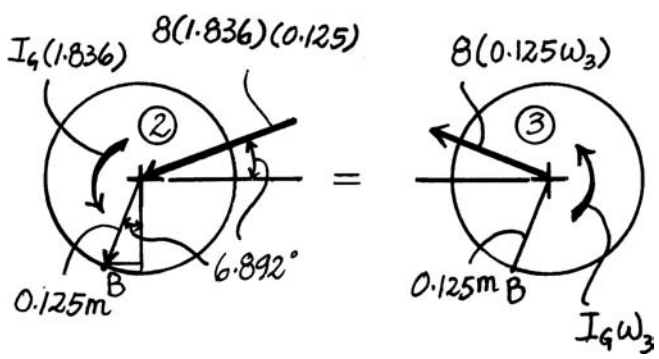

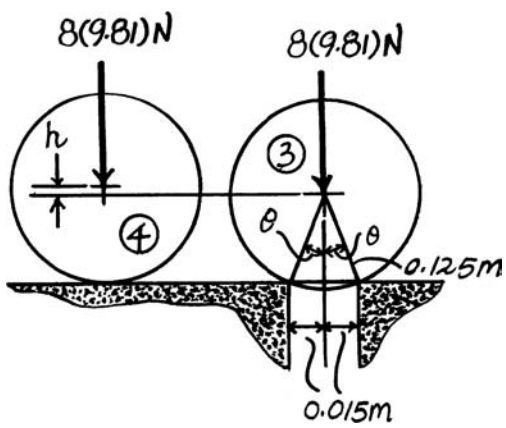

© 2010 Pearson Education, Inc., Upper Saddle River, NJ. All rights reserved. This material is protected under all copyright laws as they currently exist. No portion of this material may be reproduced, in any form or by any means, without permission in writing from the publisher.

***19–44.** The 15-kg thin ring strikes the 20-mm-high step. Determine the smallest angular velocity ω_1 the ring can have so that it will just roll over the step at A without slipping

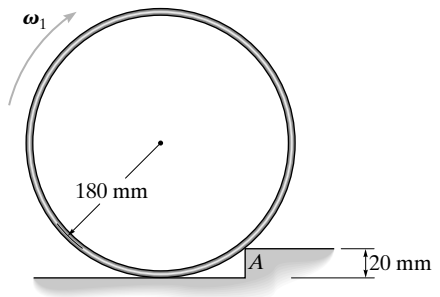

The weight is non-impulsive.

$$(H_A)_1 = (H_A)_2$$

$$15(\omega_1)(0.18)(0.18 - 0.02) + \left[15(0.18)^2\right](\omega_1) = \left[15(0.18)^2 + 15(0.18)^2\right]\omega_2$$

$$\omega_2 = 0.9444\omega_1$$

$$+\searrow \Sigma F_n = m(a_G)_n\,; \qquad (15)(9.81)\cos\theta - N_A = 15\omega_2^2\,(0.18)$$

When hoop is about to rebound, $N_A - 0$. Also, $\cos\theta = \dfrac{160}{180}$, and so

$$\omega_2 = 6.9602 \text{ rad/s}$$

$$\omega_1 = \frac{6.9602}{0.9444} = 7.37 \text{ rad/s} \qquad \textbf{Ans.}$$

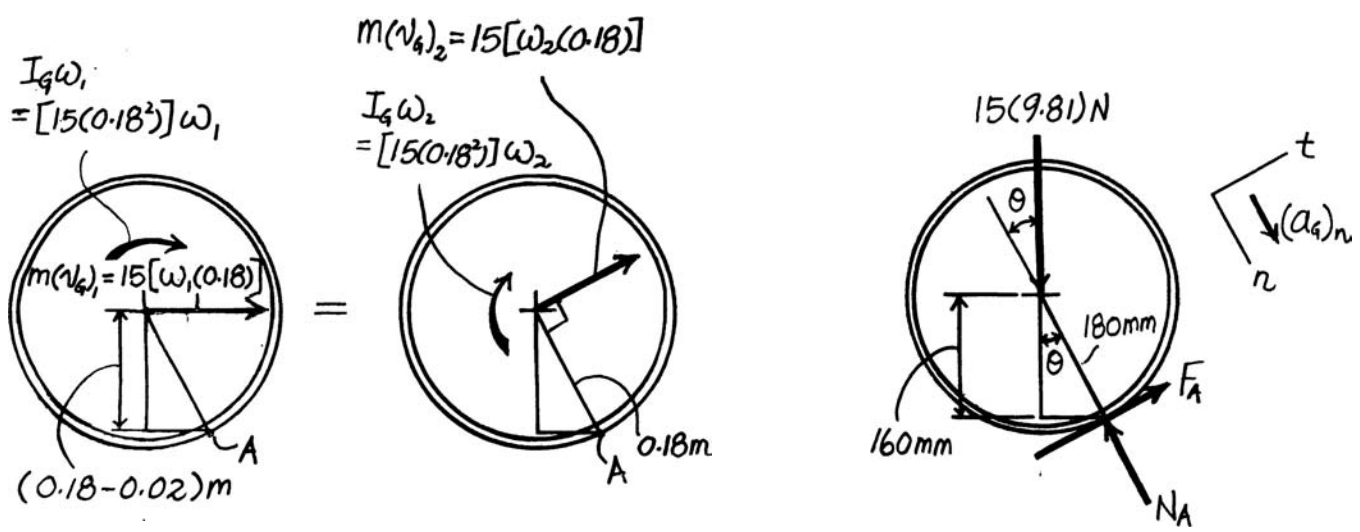

© 2010 Pearson Education, Inc., Upper Saddle River, NJ. All rights reserved. This material is protected under all copyright laws as they currently exist. No portion of this material may be reproduced, in any form or by any means, without permission in writing from the publisher.

•19–45. The uniform pole has a mass of 15 kg and falls from rest when $\theta = 90°$. It strikes the edge at A when $\theta = 60°$. If the pole then begins to pivot about this point after contact, determine the pole's angular velocity just after the impact. Assume that the pole does not slip at B as it falls until it strikes A.

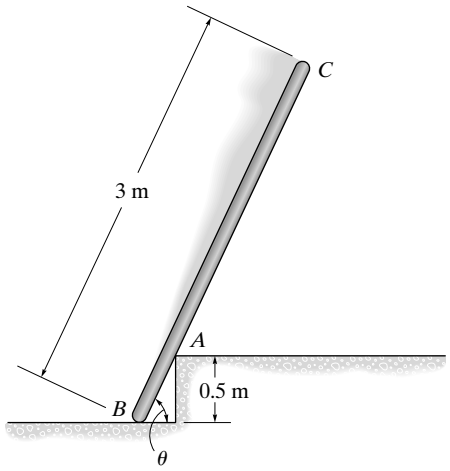

Conservation of Energy: Datum is set at point B. When the pole is at its initial and final position, its center of gravity is located 1.5 m and 1.5 sin 60° m = 1.299 m *above* the datum. Its initial and final potential energy are $15(9.81)(1.5) = 220.725\ \text{N}\cdot\text{m}$ and $15(9.81)(1.299) = 191.15\ \text{N}\cdot\text{m}$. The mass moment of inertia about point B is $I_B = \frac{1}{12}(15)(3^2) + 15(1.5^2) = 45.0\ \text{kg}\cdot\text{m}^2$. The kinetic energy of the pole before the impact is $\frac{1}{2} I_B \omega_1^2 = \frac{1}{2}(45.0)\omega_1^2 = 22.5\omega_1^2$. Applying Eq. 18–18, we have

$$T_1 + V_1 = T_2 + V_2$$

$$0 + 220.725 = 22.5\omega_1^2 + 191.15$$

$$\omega_1 = 1.146\ \text{rad/s}$$

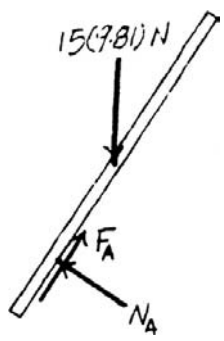

Conservation of Angular Momentum: Since the weight of the pole is *nonimpulsive* force, the angular momentum is conserved about point A. The velocity of its mass center before impact is $v_G = \omega_1 r_{GB} = 1.146(1.5) = 1.720$ m/s. The mass moment of inertia of the pole about its mass center and point A are

$$I_G = \frac{1}{12}(15)(3^2) = 11.25\ \text{kg}\cdot\text{m}^2$$

and

$$I_A = \frac{1}{12}(15)(3^2) + 15\left(1.5 - \frac{0.5}{\sin 60°}\right)^2 = 24.02\ \text{kg}\cdot\text{m}^2$$

Applying Eq. 19–17, we have

$$(H_A)_1 = (H_A)_2$$

$$(mv_G)(r_{GA}) + I_G\omega_1 = I_A\omega_2$$

$$[15(1.720)]\left(1.5 - \frac{0.5}{\sin 60°}\right) + 11.25(1.146) = 24.02\omega_2$$

$$\omega_2 = 1.53\ \text{rad/s} \qquad \textbf{Ans.}$$

© 2010 Pearson Education, Inc., Upper Saddle River, NJ. All rights reserved. This material is protected under all copyright laws as they currently exist. No portion of this material may be reproduced, in any form or by any means, without permission in writing from the publisher.

19–46. The 10-lb block slides on the smooth surface when the corner D hits a stop block S. Determine the minimum velocity **v** the block should have which would allow it to tip over on its side and land in the position shown. Neglect the size of S. *Hint:* During impact consider the weight of the block to be nonimpulsive.

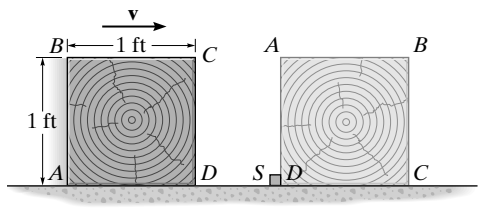

Conservation of Energy: If the block tips over about point D, it must at least achieve the dash position shown. Datum is set at point D. When the block is at its initial and final position, its center of gravity is located 0.5 ft and 0.7071 ft *above* the datum. Its initial and final potential energy are $10(0.5) = 5.00\ \text{ft}\cdot\text{lb}$ and $10(0.7071) = 7.071\ \text{ft}\cdot\text{lb}$. The mass moment of inertia of the block about point D is

$$I_D = \frac{1}{12}\left(\frac{10}{32.2}\right)\left(1^2 + 1^2\right) + \left(\frac{10}{32.2}\right)\left(\sqrt{0.5^2 + 0.5^2}\right)^2 = 0.2070\ \text{slug}\cdot\text{ft}^2$$

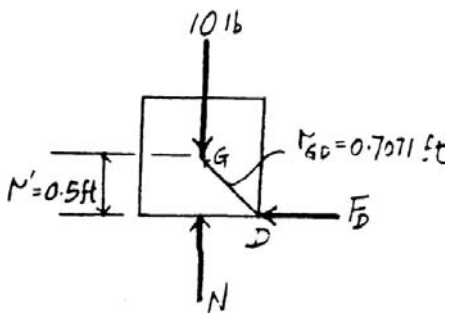

The initial kinetic energy of the block (after the impact) is $\frac{1}{2} I_D\,\omega_2^2 = \frac{1}{2}(0.2070)\,\omega_2^2$. Applying Eq. 18–18, we have

$$T_2 + V_2 = T_3 + V_3$$

$$\frac{1}{2}(0.2070)\,\omega_2^2 + 5.00 = 0 + 7.071$$

$$\omega_2 = 4.472\ \text{rad/s}$$

Conservation of Angular Momentum: Since the weight of the block and the normal reaction N are *nonimpulsive* forces, the angular momentum is conserves about point D. Applying Eq. 19–17, we have

$$(H_D)_1 = (H_D)_2$$

$$(mv_G)(r') = I_D\,\omega_2$$

$$\left[\left(\frac{10}{32.2}\right)v\right](0.5) = 0.2070(4.472)$$

$$v = 5.96\ \text{ft/s} \qquad \textbf{Ans.}$$

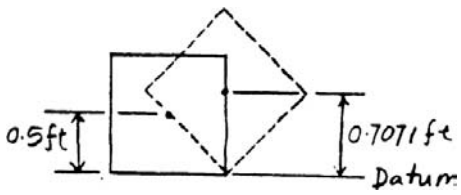

© 2010 Pearson Education, Inc., Upper Saddle River, NJ. All rights reserved. This material is protected under all copyright laws as they currently exist. No portion of this material may be reproduced, in any form or by any means, without permission in writing from the publisher.

19–47. The target is a thin 5-kg circular disk that can rotate freely about the z axis. A 25-g bullet, traveling at 600 m/s, strikes the target at A and becomes embedded in it. Determine the angular velocity of the target after the impact. Initially, it is at rest.

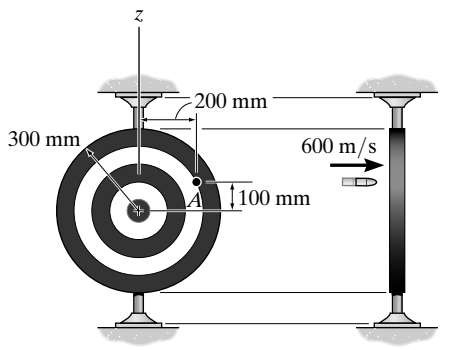

Conservation of Angular Momentum: Referring to Fig. a, the sum of the angular impulse of the system about the z axis is zero. Thus, the angular impulse of the system is conserved about the z axis. The mass moment of inertia of the target about the z axis is $I_z = \frac{1}{4}mr^2 = \frac{1}{4}(5)\left(0.3^2\right) = 0.1125\ \text{kg}\cdot\text{m}^2$. Since the target rotates about the z axis when the bullet is embedded in the target, the bullet's velocity is $(v_b)_2 = \omega(0.2)$. Then,

$$(H_z)_1 = (H_z)_2$$

$$0.025(600)(0.2) = 0.1125\omega + 0.025\left[\omega(0.2)\right](0.2)$$

$$\omega = 26.4\ \text{rad/s} \qquad \textbf{Ans.}$$

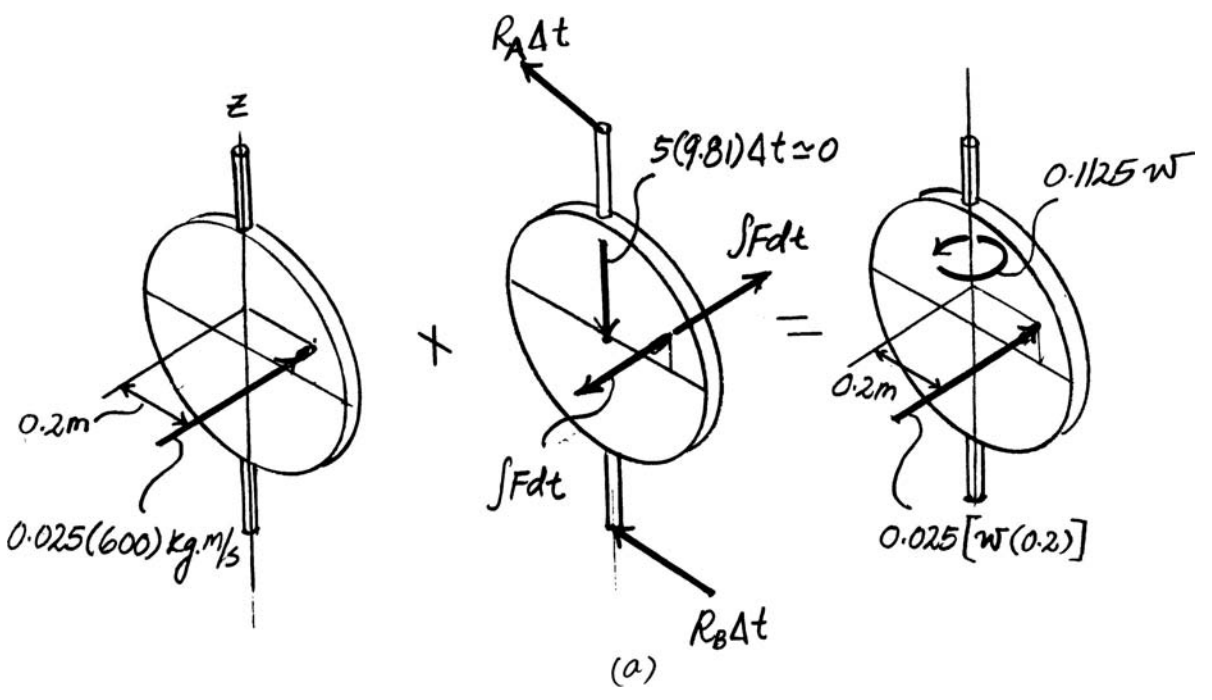

(a)

© 2010 Pearson Education, Inc., Upper Saddle River, NJ. All rights reserved. This material is protected under all copyright laws as they currently exist. No portion of this material may be reproduced, in any form or by any means, without permission in writing from the publisher.

***19–48.** A 2-kg mass of putty D strikes the uniform 10-kg plank ABC with a velocity of 10 m/s. If the putty remains attached to the plank, determine the maximum angle θ of swing before the plank momentarily stops. Neglect the size of the putty.

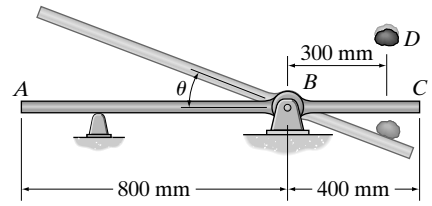

Conservation of Angular Momentum: Referring to Fig. a, the sum of the angular impulses about point B is zero. Thus, angular impulse of the system is conserved about this point. Since rod AC rotates about point B, $(v_{GAC})_2 = \omega_2 r_{GAC} = \omega_2(0.2)$ and $(v_D)_2 = \omega_2 r_{GD} = \omega_2(0.3)$. The mass moment of inertia of rod AC about its mass center is $I_{GAC} = \frac{1}{12} ml^2 = \frac{1}{12}(10)\left(1.2^2\right) = 1.2\ \text{kg}\cdot\text{m}^2$. Then,

$$(H_B)_1 = (H_B)_2$$

$$2(10)(0.3) = 1.2\omega_2 + 10\left[\omega_2(0.2)\right](0.2) + 2\left[\omega_2(0.3)\right](0.3)$$

$$\omega_2 = 3.371\ \text{rad/s} \qquad \textbf{Ans.}$$

Conservation of Energy: With reference to the datum in Fig. a,

$$V_2 = \left(V_g\right)_2 = W_{AC}\,(y_{GAC})_2 + W_D(y_{GD})_2 = 0$$

and

$$V_3 = \left(V_g\right)_3 = W_{AC}\,(y_{GAC})_3 - W_D(y_{GD})_3$$

$$= 10(9.81)(0.2\sin\theta) - 2(9.81)(0.3\sin\theta) = 13.734\sin\theta$$

The initial kinetic energy of the system is

$$T_2 = \frac{1}{2} I_{GAC}\,\omega_2{}^2 + \frac{1}{2} m_{AC}\,(v_{GAC})_2{}^2 + \frac{1}{2} m_D(v_{GD})_2{}^2$$

$$= \frac{1}{2}(1.2)\left(3.371^2\right) + \frac{1}{2}(10)\left[3.371(0.2)\right]^2 + \frac{1}{2}(2)\left[3.371(0.3)\right]^2 = 10.11\ \text{J}$$

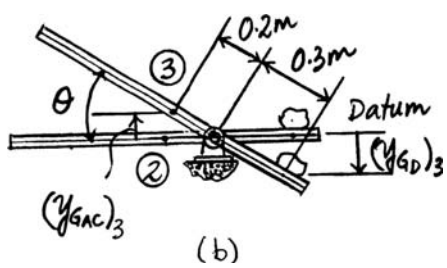

Since the system is required to be at rest in the final position, $T_3 = 0$. Then,

$$T_2 + V_2 = T_3 + V_3$$

$$10.11 + 0 = 0 + 13.734\sin\theta$$

$$\theta = 47.4^\circ \qquad \textbf{Ans.}$$

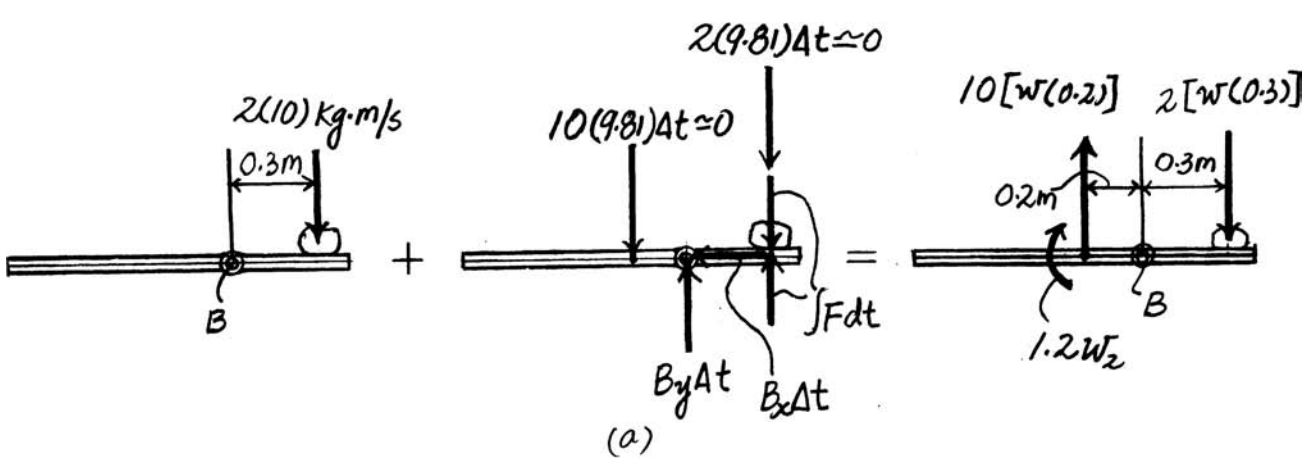

© 2010 Pearson Education, Inc., Upper Saddle River, NJ. All rights reserved. This material is protected under all copyright laws as they currently exist. No portion of this material may be reproduced, in any form or by any means, without permission in writing from the publisher.

•19–49. The uniform 6-kg slender rod AB is given a slight horizontal disturbance when it is in the vertical position and rotates about B without slipping. Subsequently, it strikes the step at C. The impact is perfectly plastic and so the rod rotates about C without slipping after the impact. Determine the angular velocity of the rod when it is in the horizontal position shown.

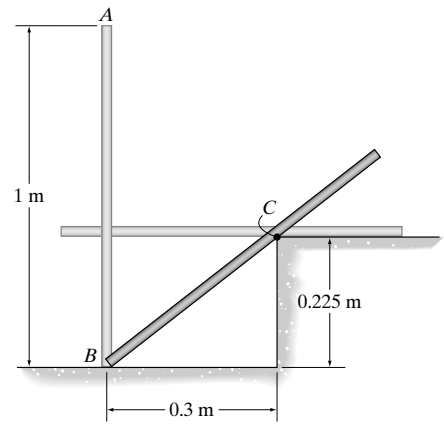

Conservation of Energy: From the geometry of Fig. a, $\theta = \tan^{-1}\left(\frac{0.225}{0.3}\right) = 36.87°$ and $BC = \sqrt{0.3^2 + 0.225^2} = 0.375$ m. Thus, $r_{CG} = 0.5 - 0.375 = 0.125$ m. With reference to the datum, $V_1 = W(y_G)_1 = 6(9.81)(0.5) = 29.43$ J, $V_2 = V_3 = W(y_G)_3 = 6(9.81)(0.5 \sin 36.87°) = 17.658$ J, and $V_4 = W(y_G)_4 = 6(9.81)(0.225) = 13.2435$ J. Since the rod is initially at rest, $T_1 = 0$. The rod rotates about point B before impact. Thus, $(v_G)_2 = \omega_2 r_{BG} = \omega_2(0.5)$. The mass moment of inertia of the rod about its mass center is $I_G = \frac{1}{12}ml^2 = \frac{1}{12}(6)(1^2) = 0.5\ \text{kg}\cdot\text{m}^2$. Then, $T_2 = \frac{1}{2}m(v_G)_2{}^2 + \frac{1}{2}I_G\omega^2 = \frac{1}{2}(6)[\omega_2(0.5)]^2 + \frac{1}{2}(0.5)\omega_2{}^2 = 1\omega_2{}^2$. Therefore,

$$T_1 + V_1 = T_2 + V_2$$
$$0 + 29.43 = 1\omega_2{}^2 + 17.658$$
$$\omega_2 = 3.431\ \text{rad/s}$$

The rod rotates about point C after impact. Thus, $v_G = \omega r_{CG} = \omega(0.125)$. Then,

$$T = \frac{1}{2}m(v_G)^2 + \frac{1}{2}I_G\omega^2 = \frac{1}{2}(6)[\omega(0.125)]^2 + \frac{1}{2}(0.5)\omega^2 = 0.296875\omega^2$$

so that

$$T_3 = 0.296875\omega_3{}^2 \text{ and } T_4 = 0.296875\omega_4{}^2$$

$$T_3 + V_3 = T_4 + V_4$$
$$0.296875\omega_3{}^2 + 17.658 = 0.296875\omega_4{}^2 + 13.2435$$
$$\omega_4{}^2 - \omega_3{}^2 = 14.87 \qquad \textbf{(1)}$$

Conservation of Angular Momentum: Referring to Fig. b, the sum of the angular impulses about point C is zero. Thus, angular momentum of the rod is conserved about this point during the impact. Then,

$$(H_C)_1 = (H_C)_2$$
$$6[3.431(0.5)](0.125) + 0.5(3.431) = 6[\omega_3(0.125)](0.125) + 0.5\omega_3$$
$$\omega_3 = 5.056\ \text{rad/s}$$

Substituting this result into Eq. (1), we obtain

$$\omega_4{}^2 - (5.056)^2 = 14.87$$
$$\omega_4 = 6.36\ \text{rad/s} \qquad \textbf{Ans.}$$

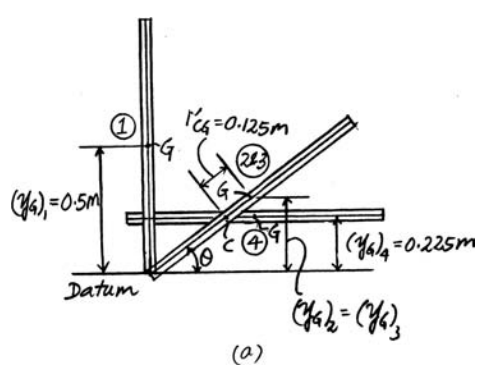

(a)

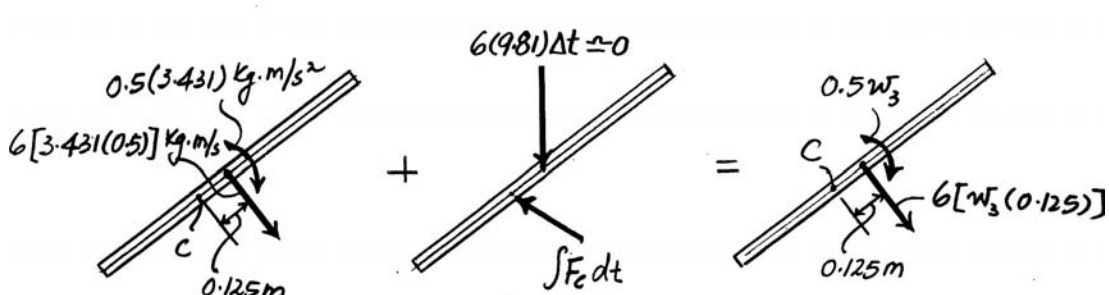

(b)

© 2010 Pearson Education, Inc., Upper Saddle River, NJ. All rights reserved. This material is protected under all copyright laws as they currently exist. No portion of this material may be reproduced, in any form or by any means, without permission in writing from the publisher.

19–50. The rigid 30-lb plank is struck by the 15-lb hammer head H. Just before the impact the hammer is gripped loosely and has a vertical velocity of 75 ft/s. If the coefficient of restitution between the hammer head and the plank is $e = 0.5$, determine the maximum height attained by the 50-lb block D. The block can slide freely along the two vertical guide rods. The plank is initially in a horizontal position.

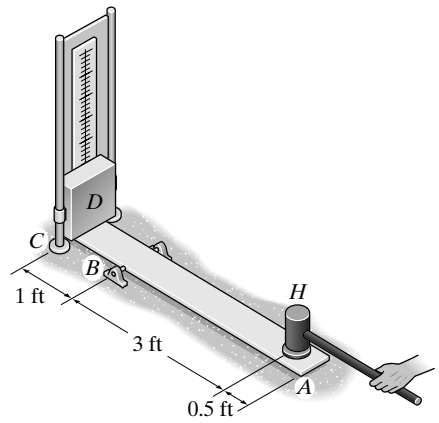

Conservation of Angular Momentum: Referring to Fig. a, the sum of the angular impulses about point B is zero. Thus, angular momentum of the system is conserved about this point during the impact. Since the plank rotates about point B, $(v_D)_2 = \omega_2(1)$ and $(v_G)_2 = \omega_2(1.25)$. The mass moment of inertia of the plank about its mass center is $I_G = \frac{1}{12}ml^2 = \frac{1}{12}\left(\frac{30}{32.2}\right)\left(4.5^2\right) = 1.572 \text{ slug}\cdot\text{ft}^2$. Thus,

$$(H_B)_1 = (H_B)_2$$

$$\frac{15}{32.2}(75)(3) = \frac{50}{32.2}\left[\omega_2(1)\right](1) + \frac{30}{32.2}\left[\omega_2(1.25)\right](1.25) + 1.572\omega_2 - \frac{15}{32.2}(v_H)_2(3)$$

$$4.581\omega_2 - 1398(v_H)_2 = 104.81 \qquad \textbf{(1)}$$

Coefficient of Restitution: Here, $(v_A)_2 = \omega_2(3)\downarrow$. Thus,

$$(+\uparrow) \qquad e = \frac{(v_A)_2 - (v_H)_2}{(v_H)_1 - (v_A)_1}$$

$$0.5 = \frac{-\omega_2(3) - (v_H)_2}{-75 - 0}$$

$$3\omega_2 + (v_H)_2 = 37.5 \qquad \textbf{(2)}$$

Solving Eqs. (1) and (2),

$$\omega_2 = 17.92 \text{ rad/s} \qquad (v_H)_2 = -16.26 \text{ ft/s} = 16.26 \text{ ft/s}\downarrow$$

Conservation of Energy: With reference to the datum in Fig. b, $V_2 = \left(V_g\right)_2 = W_D(y_G)_2 = 0$ and $V_3 = \left(V_g\right)_3 = W_D(y_G)_3 = 50h$.

$$\left(v_D\right)_2 = \omega_2(1) = 17.92(1) = 17.92 \text{ ft/s and } (v_D)_3 = 0$$

Thus,

$$T_2 = \frac{1}{2}m_D(v_D)_2{}^2 = \frac{1}{2}\left(\frac{50}{32.2}\right)\left(17.92^2\right) = 249.33 \text{ ft}\cdot\text{lb and } T_3 = 0$$

Then

$$T_2 + V_2 = T_3 + V_3$$

$$249.33 + 0 = 0 + 50h$$

$$h = 4.99 \text{ ft} \qquad \textbf{Ans.}$$

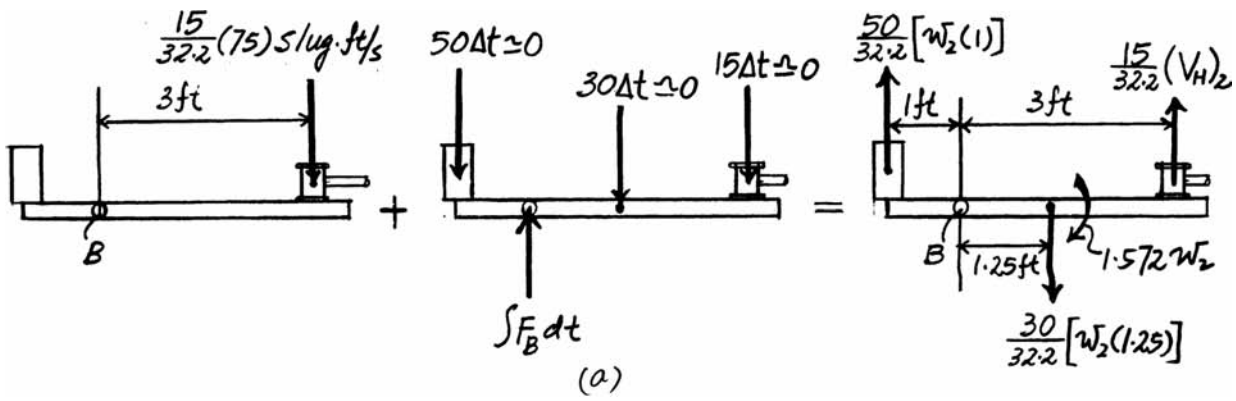

(a)

© 2010 Pearson Education, Inc., Upper Saddle River, NJ. All rights reserved. This material is protected under all copyright laws as they currently exist. No portion of this material may be reproduced, in any form or by any means, without permission in writing from the publisher.

19–51. The disk has a mass of 15 kg. If it is released from rest when $\theta = 30°$, determine the maximum angle θ of rebound after it collides with the wall. The coefficient of restitution between the disk and the wall is $e = 0.6$. When $\theta = 0°$, the disk hangs such that it just touches the wall. Neglect friction at the pin C.

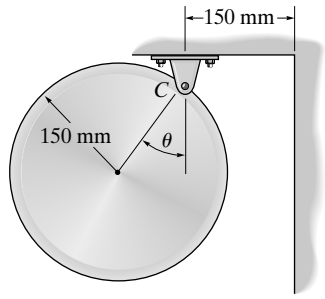

Datum at lower position of G.

$$T_1 + V_1 = T_2 + V_2$$

$$0 + (15)(9.81)(0.15)(1 - \cos 30°) = \frac{1}{2}\left[\frac{3}{2}(15)(0.15)^2\right]\omega^2 + 0$$

$$\omega = 3.418 \text{ rad/s}$$

$$\left(\overset{+}{\rightarrow}\right) \qquad e = 0.6 = \frac{0 - (-0.15\omega')}{3.418(0.15) - 0}$$

$$\omega' = 2.0508 \text{ rad/s}$$

$$T_2 + V_2 = T_3 + V_3$$

$$\frac{1}{2}\left[\frac{3}{2}(15)(0.15)^2\right](2.0508)^2 + 0 = 0 + 15(9.81)(0.15)(1 - \cos\theta)$$

$$\theta = 17.9° \qquad \textbf{Ans.}$$

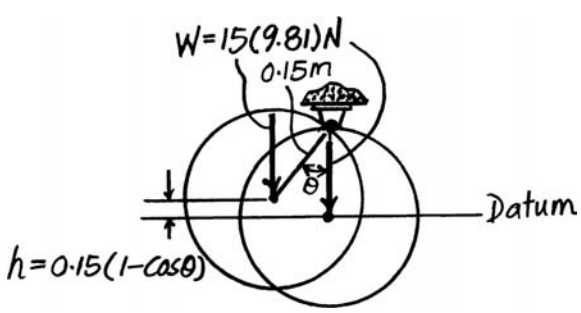

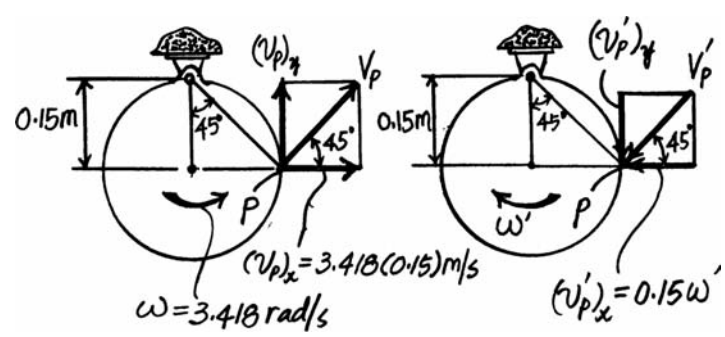

© 2010 Pearson Education, Inc., Upper Saddle River, NJ. All rights reserved. This material is protected under all copyright laws as they currently exist. No portion of this material may be reproduced, in any form or by any means, without permission in writing from the publisher.

***19–52.** The mass center of the 3-lb ball has a velocity of $(v_G)_1 = 6$ ft/s when it strikes the end of the smooth 5-lb slender bar which is at rest. Determine the angular velocity of the bar about the z axis just after impact if $e = 0.8$.

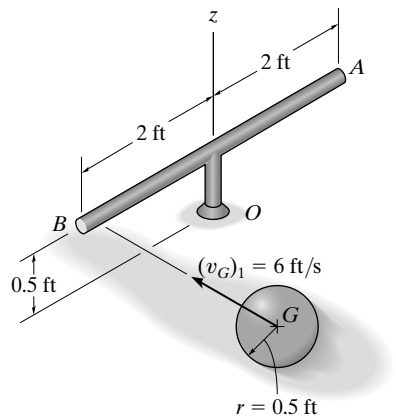

Conservation of Angular Momentum: Since force F due to the impact is *internal* to the system consisting of the slender bar and the ball, it will cancel out. Thus, angular momentum is conserved about the z axis. The mass moment of inertia of the slender bar about the z axis is $I_z = \frac{1}{12}\left(\frac{5}{32.2}\right)(4^2) = 0.2070 \text{ slug}\cdot\text{ft}^2$. Here, $\omega_2 = \frac{(v_B)_2}{2}$. Applying Eq. 19–17, we have

$$(H_z)_1 = (H_z)_2$$

$$\left[m_b\,(v_G)_1\right](r_b) = I_z\,\omega_2 + \left[m_b\,(v_G)_2\right](r_b)$$

$$\left(\frac{3}{32.2}\right)(6)(2) = 0.2070\left[\frac{(v_B)_2}{2}\right] + \left(\frac{3}{32.2}\right)(v_G)_2(2) \qquad \textbf{(1)}$$

Coefficient of Restitution: Applying Eq. 19–20, we have

$$e = \frac{(v_B)_2 - (v_G)_2}{(v_G)_1 - (v_B)_1}$$

$$0.8 = \frac{(v_B)_2 - (v_G)_2}{6 - 0} \qquad \textbf{(2)}$$

Solving Eqs. (1) and (2) yields

$$(v_G)_2 = 2.143 \text{ ft/s} \qquad (v_B)_2 = 6.943 \text{ ft/s}$$

Thus, the angular velocity of the slender rod is given by

$$\omega_2 = \frac{(v_B)_2}{2} = \frac{6.943}{2} = 3.47 \text{ rad/s} \qquad \textbf{Ans.}$$

© 2010 Pearson Education, Inc., Upper Saddle River, NJ. All rights reserved. This material is protected under all copyright laws as they currently exist. No portion of this material may be reproduced, in any form or by any means, without permission in writing from the publisher.

•19–53. The 300-lb bell is at rest in the vertical position before it is struck by a 75-lb wooden post suspended from two equal-length ropes. If the post is released from rest at $\theta = 45°$, determine the angular velocity of the bell and the velocity of the post immediately after the impact. The coefficient of restitution between the bell and the post is $e = 0.6$. The center of gravity of the bell is located at point G and its radius of gyration about G is $k_G = 1.5$ ft.

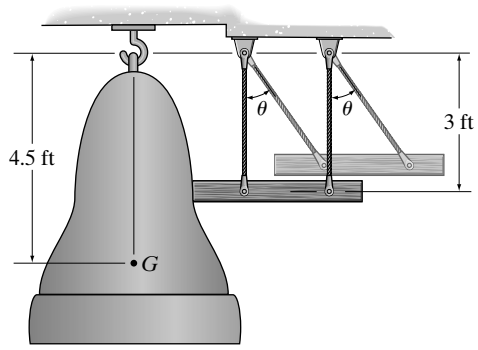

Conservation of Energy: With reference to the datum in Fig. *a*, $V_1 = (V_g)_1 = -W(y_G)_1 = -75(3\cos 45°) = -159.10\ \text{ft}\cdot\text{lb}$ and $V_2 = (V_g)_2 = -W(y_G)_2 = -75(3) = -225\ \text{ft}\cdot\text{lb}$. Since the post is initially at rest, $T_1 = 0$. The post undergoes curvilinear translation, $T_2 = \frac{1}{2}m(v_P)_2{}^2 = \frac{1}{2}\left[\frac{75}{32.2}\right](v_P)_2{}^2$. Thus,

$$T_1 + V_1 = T_2 + V_2$$

$$0 + (-159.10) = \frac{1}{2}\left[\frac{75}{32.2}\right](v_G)_2{}^2 + (-225)$$

$$(v_P)_2 = 7.522\ \text{ft/s}$$

Conservation of Angular Momentum: The sum of the angular impulses about point O is zero. Thus, angular momentum of the system is conserved about this point during the impact. Since the bell rotates about point O, $(v_G)_3 = \omega_3 r_{OG} = \omega_3(4.5)$. The mass moment of inertia of the bell about its mass center is $IG = \frac{1}{12}mk_G{}^2 = \frac{300}{32.2}\left(1.5^2\right) = 20.96\ \text{slug}\cdot\text{ft}^2$. Thus,

$$(H_O)_2 = (H_O)_3$$

$$\frac{75}{32.2}(7.522)(3) = \frac{300}{32.2}\left[\omega_3(4.5)\right](4.5) + 20.96\omega_3 - \frac{75}{32.2}(v_P)_3(3)$$

$$209.63\omega_3 - 6.988(v_P)_3 = 52.56 \qquad \textbf{(1)}$$

Coefficient of Restitution: The impact point A on the bell along the line of impact (x axis) is $\left[(v_A)_3\right]_x = \omega_3(3)$. Thus,

$$e = \frac{\left[(v_A)_3\right]_x - (v_P)_3}{(v_P)_2 - \left[(v_A)_2\right]_x}$$

$$(\overset{+}{\rightarrow}) \qquad 0.6 = \frac{-\omega_3(3) - (v_P)_3}{-7.522 - 0}$$

$$3\omega_3 + (v_P)_3 = 4.513 \qquad \textbf{(2)}$$

Solving Eqs. (1) and (2),

$$\omega_3 = 0.365\ \text{rad/s} \qquad (v_P)_3 = 3.42\ \text{ft/s} \qquad \textbf{Ans.}$$

© 2010 Pearson Education, Inc., Upper Saddle River, NJ. All rights reserved. This material is protected under all copyright laws as they currently exist. No portion of this material may be reproduced, in any form or by any means, without permission in writing from the publisher.

19–54. The 4-lb rod AB hangs in the vertical position. A 2-lb block, sliding on a smooth horizontal surface with a velocity of 12 ft/s, strikes the rod at its end B. Determine the velocity of the block immediately after the collision. The coefficient of restitution between the block and the rod at B is $e = 0.8$.

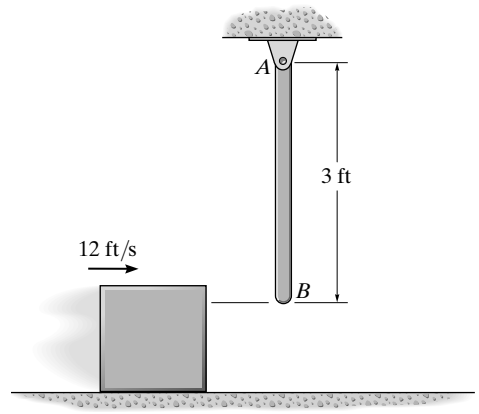

Conservation of Angular Momentum: Since force F due to the impact is *internal* to the system consisting of the slender rod and the block, it will cancel out. Thus, angular momentum is conserved about point A. The mass moment of inertia of the slender rod about point A is $I_A = \frac{1}{12}\left(\frac{4}{32.2}\right)(3^2) + \frac{4}{32.2}(1.5^2) = 0.3727 \text{ slug}\cdot\text{ft}^2$.

Here, $\omega_2 = \frac{(v_B)_2}{3}$. Applying Eq. 19–17, we have

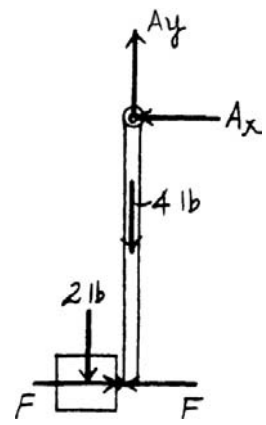

$$(H_A)_1 = (H_A)_2$$

$$\left[m_b\,(v_b)_1\right](r_b) = I_A\,\omega_2 + \left[m_b\,(v_b)_2\right](r_b)$$

$$\left(\frac{2}{32.2}\right)(12)(3) = 0.3727\left[\frac{(v_B)_2}{3}\right] + \left(\frac{2}{32.2}\right)(v_b)_2(3) \qquad \textbf{(1)}$$

Coefficient of Restitution: Applying Eq. 19–20, we have

$$e = \frac{(v_B)_2 - (v_b)_2}{(v_b)_1 - (v_B)_1}$$

$$(\overset{+}{\rightarrow}) \qquad 0.8 = \frac{(v_B)_2 - (v_b)_2}{12 - 0} \qquad \textbf{(2)}$$

Solving Eqs. (1) and (2) yields

$$(v_b)_2 = 3.36 \text{ ft/s} \rightarrow \qquad \textbf{Ans.}$$

$$(v_B)_2 = 12.96 \text{ ft/s} \rightarrow$$

© 2010 Pearson Education, Inc., Upper Saddle River, NJ. All rights reserved. This material is protected under all copyright laws as they currently exist. No portion of this material may be reproduced, in any form or by any means, without permission in writing from the publisher.

19–55. The pendulum consists of a 10-lb sphere and 4-lb rod. If it is released from rest when $\theta = 90°$, determine the angle θ of rebound after the sphere strikes the floor. Take $e = 0.8$.

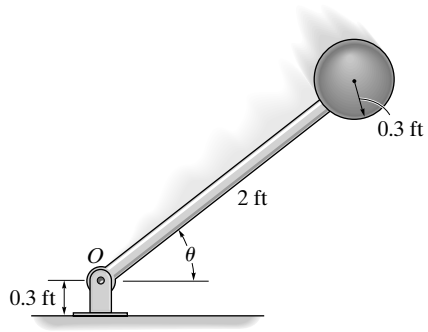

$$I_A = \frac{1}{3}\left(\frac{4}{32.2}\right)(2)^2 + \frac{2}{5}\left(\frac{10}{32.2}\right)(0.3)^2 + \left(\frac{10}{32.2}\right)(2.3)^2 = 1.8197 \text{ slug}\cdot\text{ft}^2$$

Just before impact:

Datum through O.

$$T_1 + V_1 = T_2 + V_2$$

$$0 + 4(1) + 10(2.3) = \frac{1}{2}(1.8197)\omega^2 + 0$$

$$\omega_2 = 5.4475 \text{ rad/s}$$

$$v = 2.3(5.4475) = 12.529 \text{ ft/s}$$

Since the floor does not move,

$$(+\uparrow) \qquad e = 0.8 = \frac{(v_P) - 0}{0 - (-12.529)}$$

$$(v_P)_3 = 10.023 \text{ ft/s}$$

$$\omega_3 = \frac{10.023}{2.3} = 4.358 \text{ rad/s}$$

$$T_3 + V_3 = T_4 + V_4$$

$$\frac{1}{2}(1.8197)(4.358)^2 + 0 = 4(1 \sin\theta_1) + 10(2.3 \sin\theta_1)$$

$$\theta_1 = 39.8° \qquad \textbf{Ans.}$$

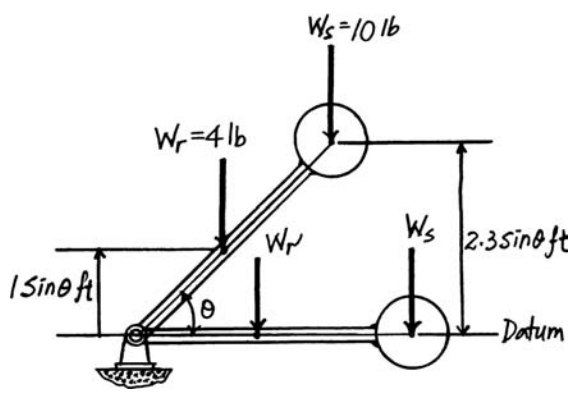

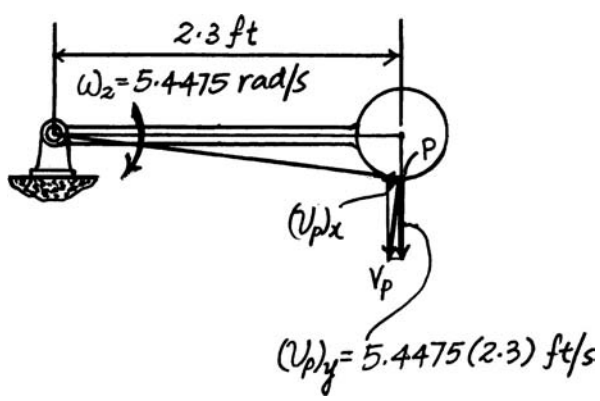

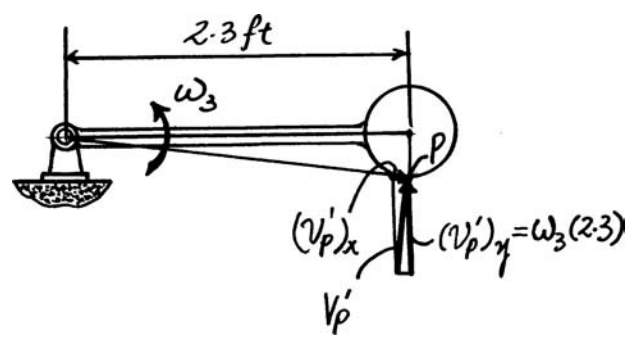

© 2010 Pearson Education, Inc., Upper Saddle River, NJ. All rights reserved. This material is protected under all copyright laws as they currently exist. No portion of this material may be reproduced, in any form or by any means, without permission in writing from the publisher.

***19–56.** The solid ball of mass m is dropped with a velocity $\mathbf{v}_1$ onto the edge of the rough step. If it rebounds horizontally off the step with a velocity $\mathbf{v}_2$, determine the angle θ at which contact occurs. Assume no slipping when the ball strikes the step. The coefficient of restitution is e.

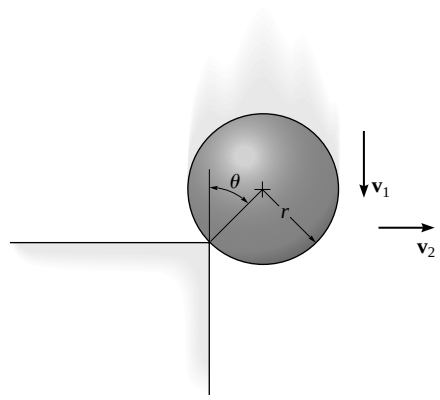

Conservation of Angular Momentum: Since the weight of the solid ball is a *nonimpulsive force*, then angular momentum is conserved about point A. The mass moment of inertia of the solid ball about its mass center is $I_G = \frac{2}{5}mr^2$. Here, $\omega_2 = \frac{v_2 \cos\theta}{r}$. Applying Eq. 19–17, we have

$$(H_A)_1 = (H_A)_2$$

$$\left[m_b\,(v_b)_1\right](r') = I_G\,\omega_2 + \left[m_b\,(v_b)_2\right](r'')$$

$$(mv_1)(r\sin\theta) = \left(\frac{2}{5}mr^2\right)\left(\frac{v_2\cos\theta}{r}\right) + (mv_2)(r\cos\theta)$$

$$\frac{v_2}{v_1} = \frac{5}{7}\tan\theta \qquad \textbf{(1)}$$

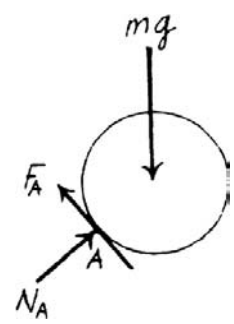

Coefficient of Restitution: Applying Eq. 19–20, we have

$$e = \frac{0 - (v_b)_2}{(v_b)_1 - 0}$$

$$e = \frac{-(v_2\sin\theta)}{-v_1\cos\theta}$$

$$\frac{v_2}{v_1} = \frac{e\cos\theta}{\sin\theta} \qquad \textbf{(2)}$$

Equating Eqs. (1) and (2) yields

$$\frac{5}{7}\tan\theta = \frac{e\cos\theta}{\sin\theta}$$

$$\tan^2\theta = \frac{7}{5}e$$

$$\theta = \tan^{-1}\left(\sqrt{\frac{7}{5}e}\right) \qquad \textbf{Ans.}$$

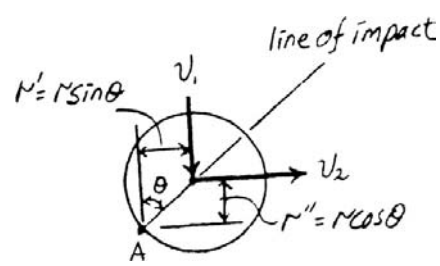

© 2010 Pearson Education, Inc., Upper Saddle River, NJ. All rights reserved. This material is protected under all copyright laws as they currently exist. No portion of this material may be reproduced, in any form or by any means, without permission in writing from the publisher.

R2–1. An automobile transmission consists of the planetary gear system shown. If the ring gear R is held fixed so that $\omega_R = 0$, and the shaft s and sun gear S, rotates at 20 rad/s, determine the angular velocity of each planet gear P and the angular velocity of the connecting rack D, which is free to rotate about the center shaft s.

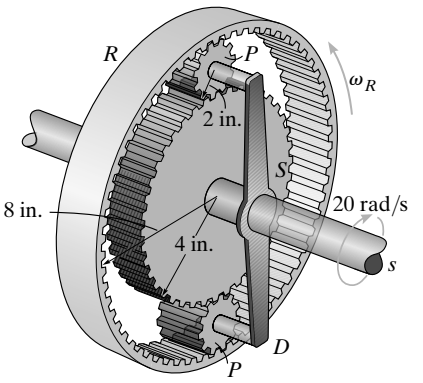

For planet gear P: The velocity of point A is $v_A = \omega_s r_s = 20\left(\frac{4}{12}\right) = 6.667$ ft/s.

$$\mathbf{v}_B = \mathbf{v}_A + \mathbf{v}_{B/A}$$

$$0 = \left[\underset{\rightarrow}{6.667}\right] + \left[\underset{\leftarrow}{\omega_P\left(\frac{4}{12}\right)}\right]$$

$$\left(\overset{+}{\rightarrow}\right) \qquad 0 = 6.667 - \omega_P\left(\frac{4}{12}\right) \qquad \omega_P = 20 \text{ rad/s} \qquad \textbf{Ans.}$$

For connecting rack D:

$$\mathbf{v}_C = \mathbf{v}_A + \mathbf{v}_{C/A}$$

$$\left[\underset{\rightarrow}{v_C}\right] = \left[\underset{\rightarrow}{6.667}\right] + \left[\underset{\leftarrow}{20\left(\frac{2}{12}\right)}\right]$$

$$\left(\overset{+}{\rightarrow}\right) \qquad v_C = 6.667 - 20\left(\frac{2}{12}\right) \qquad v_C = 3.333 \text{ ft/s}$$

The rack is rotating about a fixed axis (shaft s). Hence,

$$v_C = \omega_D r_D$$

$$3.333 = \omega_D\left(\frac{6}{12}\right) \qquad \omega_D = 6.67 \text{ rad/s} \qquad \textbf{Ans.}$$

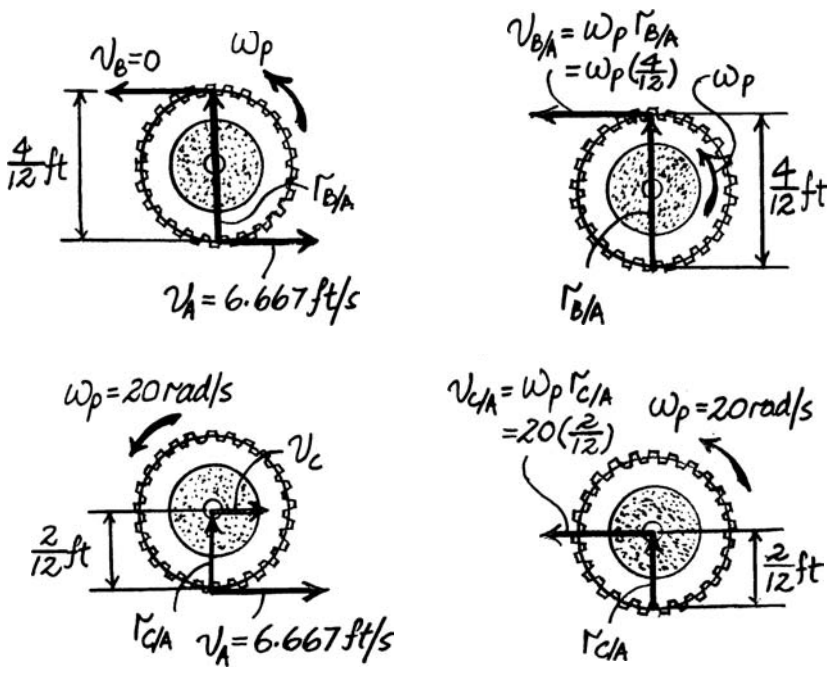

© 2010 Pearson Education, Inc., Upper Saddle River, NJ. All rights reserved. This material is protected under all copyright laws as they currently exist. No portion of this material may be reproduced, in any form or by any means, without permission in writing from the publisher.

R2–2. An automobile transmission consists of the planetary gear system shown. If the ring gear R rotates at $\omega_R = 2$ rad/s, and the shaft s and sun gear S, rotates at 20 rad/s, determine the angular velocity of each planet gear P and the angular velocity of the connecting rack D, which is free to rotate about the center shaft s.

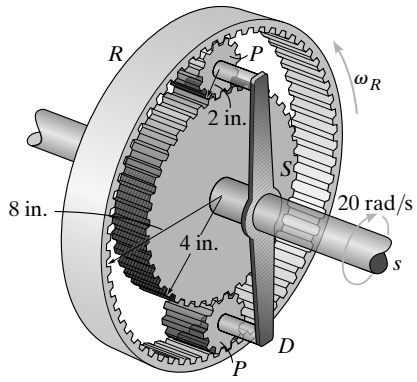

For planet gear P: The velocity of points A and B are $v_A = \omega_S r_S = 20\left(\frac{4}{12}\right)$ =6.667 ft/s and $v_B = \omega_B r_B = 2\left(\frac{8}{12}\right) = 1.333$ ft/s.

$$\mathbf{v}_B = \mathbf{v}_A + \mathbf{v}_{B/A}$$

$$\left[\underset{\leftarrow}{1.333}\right] = \left[\underset{\rightarrow}{6.667}\right] + \left[\underset{\leftarrow}{\omega_P\left(\frac{4}{12}\right)}\right]$$

$$\left(\overset{+}{\rightarrow}\right) \qquad -1.333 = 6.667 - \omega_P\left(\frac{4}{12}\right) \qquad \omega_P = 24 \text{ rad/s} \qquad \textbf{Ans.}$$

For connecting rack D:

$$\mathbf{v}_C = \mathbf{v}_A + \mathbf{v}_{C/A}$$

$$\left[\underset{\rightarrow}{v_C}\right] = \left[\underset{\rightarrow}{6.667}\right] + \left[\underset{\leftarrow}{24\left(\frac{2}{12}\right)}\right]$$

$$\left(\overset{+}{\rightarrow}\right) \qquad v_C = 6.667 - 24\left(\frac{2}{12}\right) \qquad v_C = 2.667 \text{ ft/s}$$

The rack is rotating about a fixed axis (shaft s). Hence,

$$v_C = \omega_D r_D$$

$$2.667 = \omega_D\left(\frac{6}{12}\right) \qquad \omega_D = 5.33 \text{ rad/s} \qquad \textbf{Ans.}$$

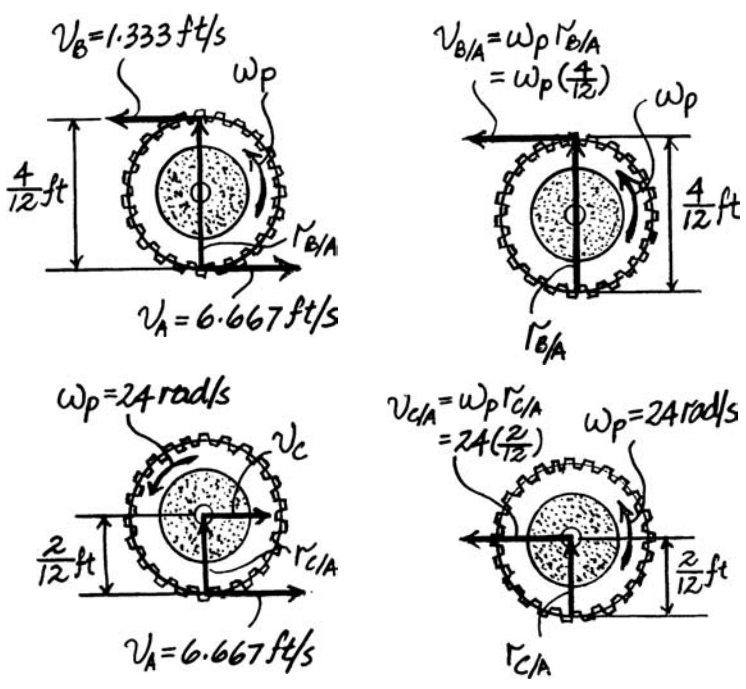

© 2010 Pearson Education, Inc., Upper Saddle River, NJ. All rights reserved. This material is protected under all copyright laws as they currently exist. No portion of this material may be reproduced, in any form or by any means, without permission in writing from the publisher.

R2–3. The 6-lb slender rod AB is released from rest when it is in the *horizontal position* so that it begins to rotate clockwise. A 1-lb ball is thrown at the rod with a velocity $v = 50$ ft/s. The ball strikes the rod at C at the instant the rod is in the vertical position as shown. Determine the angular velocity of the rod just after the impact. Take $e = 0.7$ and $d = 2$ ft.

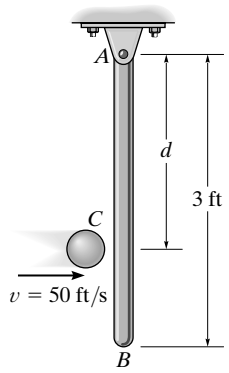

Datum at A:

$$T_1 + V_1 = T_2 + V_2$$

$$0 + 0 = \frac{1}{2}\left[\frac{1}{3}\left(\frac{6}{32.2}\right)(3)^2\right]\omega^2 - 6(1.5)$$

$$\omega = 5.675 \text{ rad/s}$$

$$\circlearrowright + \qquad (H_A)_1 = (H_A)_2$$

$$\frac{1}{32.2}(50)(2) - \left[\frac{1}{3}\left(\frac{6}{32.2}\right)(3)^2\right](5.675) = \left[\frac{1}{3}\left(\frac{6}{32.2}\right)(3)^2\right]\omega_2 + \frac{1}{32.2}(v_{BL})(2)$$

$$e = 0.7 = \frac{v_C - v_{BL}}{50 - [-5.675(2)]}$$

$$v_C = 2\omega_2$$

Solving,

$$\omega_2 = 3.81 \text{ rad/s} \qquad \textbf{Ans.}$$

$$v_{BL} = -35.3 \text{ ft/s}$$

$$v_C = 7.61 \text{ ft/s}$$

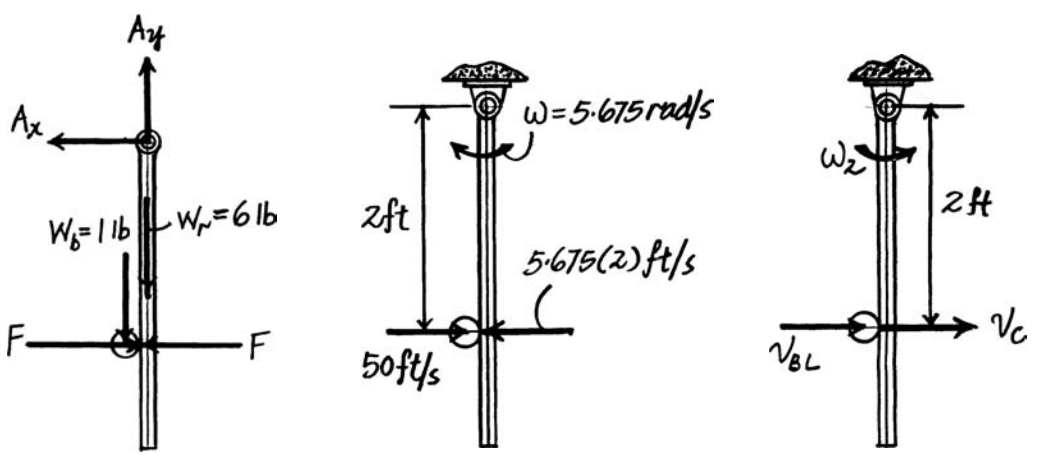

© 2010 Pearson Education, Inc., Upper Saddle River, NJ. All rights reserved. This material is protected under all copyright laws as they currently exist. No portion of this material may be reproduced, in any form or by any means, without permission in writing from the publisher.

***R2–4.** The 6-lb slender rod AB is originally at rest, suspended in the vertical position. A 1-lb ball is thrown at the rod with a velocity $v = 50$ ft/s and strikes the rod at C. Determine the angular velocity of the rod just after the impact. Take $e = 0.7$ and $d = 2$ ft.

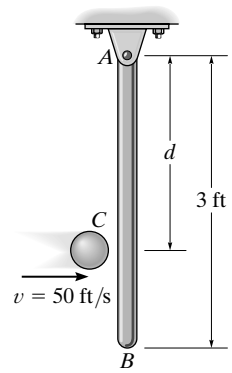

$$\circlearrowleft + \ (H_A)_1 = (H_A)_2$$

$$\left(\frac{1}{32.2}\right)(50)(2) = \left[\frac{1}{3}\left(\frac{6}{32.2}\right)(3)^2\right]\omega_2 + \frac{1}{32.2}(v_{BL})(2)$$

$$e = 0.7 = \frac{v_C - v_{BL}}{50 - 0}$$

$$v_C = 2\omega_2$$

Thus,

$$\omega_2 = 7.73 \text{ rad/s} \qquad \textbf{Ans.}$$

$$v_{BL} = -19.5 \text{ ft/s}$$

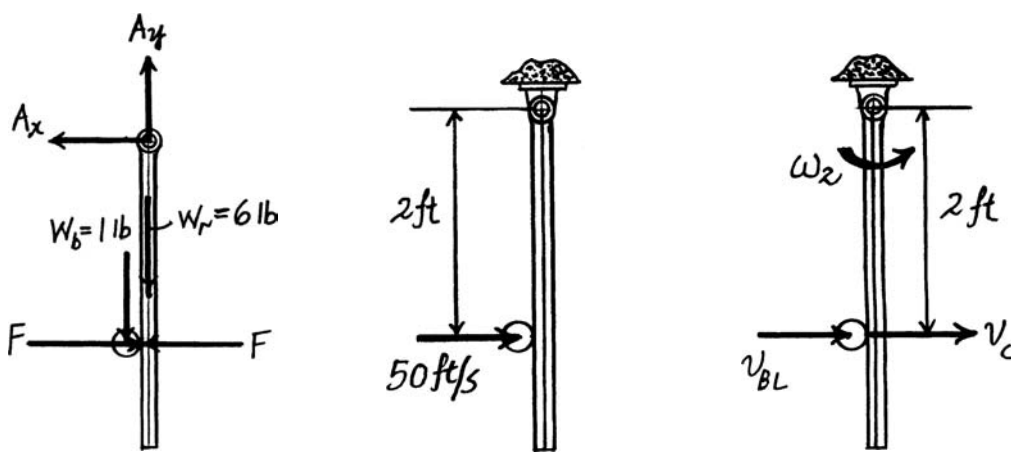

© 2010 Pearson Education, Inc., Upper Saddle River, NJ. All rights reserved. This material is protected under all copyright laws as they currently exist. No portion of this material may be reproduced, in any form or by any means, without permission in writing from the publisher.

R2–5. The 6-lb slender rod is originally at rest, suspended in the vertical position. Determine the distance d where the 1-lb ball, traveling at $v = 50$ ft/s, should strike the rod so that it does not create a horizontal impulse at A. What is the rod's angular velocity just after the impact? Take $e = 0.5$.

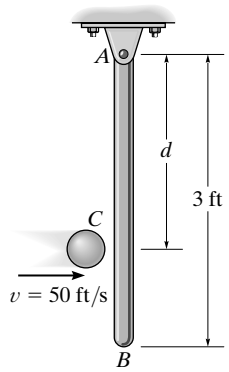

Rod:

$$\circlearrowleft + \quad (H_G)_1 + \Sigma \int M_G\, dt = (H_G)_2$$

$$0 + \int F\, dt\,(d - 1.5) = \left(\frac{1}{12}(m)(3)^2\right)\omega$$

$$m(v_G)_1 + \Sigma \int F\, dt = m(v_G)_2$$

$$0 + \int F\, dt = m(1.5\omega)$$

Thus,

$$m(1.5\omega)(d - 1.5) = \frac{1}{12}(m)(3)^2\,\omega$$

$$d = 2 \text{ ft} \qquad \textbf{Ans.}$$

This is called the center of percussion. See Example 19–5.

$$\circlearrowleft + \quad (H_A)_1 = (H_A)_2$$

$$\frac{1}{32.2}(50)(2) = \left[\frac{1}{3}\left(\frac{6}{32.2}\right)(3)^2\right]\omega_2 + \frac{1}{32.2}(v_{BL})(2)$$

$$e = 0.5 = \frac{v_C - v_{BL}}{50 - 0}$$

$$v_C = 2\omega_2$$

Thus,

$$\omega_2 = 6.82 \text{ rad/s} \qquad \textbf{Ans.}$$

$$v_{BL} = -11.4 \text{ ft/s}$$

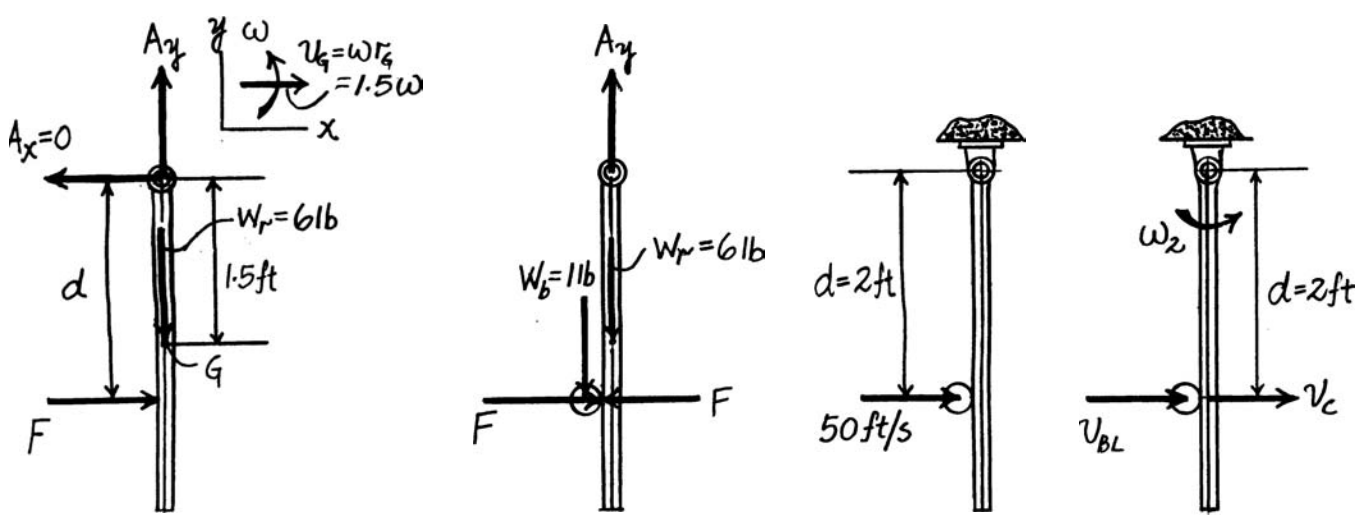

© 2010 Pearson Education, Inc., Upper Saddle River, NJ. All rights reserved. This material is protected under all copyright laws as they currently exist. No portion of this material may be reproduced, in any form or by any means, without permission in writing from the publisher.

R2–6. At a given instant, the wheel rotates with the angular motions shown. Determine the acceleration of the collar at A at this instant.

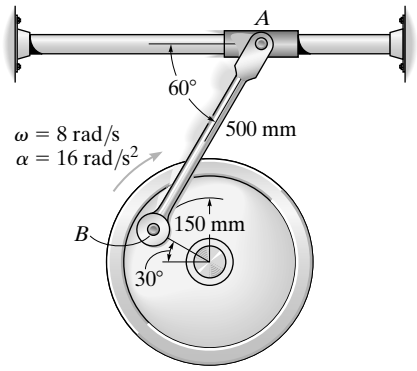

Using instantaneous center method:

$$\omega_{AB} = \frac{v_B}{r_{B/IC}} = \frac{8(0.15)}{0.5\tan 30^\circ} = 4.157 \text{ rad/s}$$

$$\mathbf{a}_B = 16(0.15)\mathbf{i} - 8^2(0.15)\mathbf{j} = \{2.4\mathbf{i} - 9.6\mathbf{j}\} \text{ m/s}^2$$

$$\mathbf{a}_A = -a_A\cos 60^\circ\mathbf{i} + a_A\sin 60^\circ\mathbf{j} \qquad \alpha = \alpha\mathbf{k} \qquad \mathbf{r}_{B/A} = \{-0.5\mathbf{i}\} \text{ m}$$

$$\mathbf{a}_B = \mathbf{a}_A + \alpha \times \mathbf{r}_{B/A} - \omega^2\mathbf{r}_{B/A}$$

$$2.4\mathbf{i} - 9.6\mathbf{j} = (-a_A\cos 60^\circ\mathbf{i} + a_A\sin 60^\circ\mathbf{j}) + (\alpha\mathbf{k}) \times (-0.5\mathbf{i}) - (4.157)^2(-0.5\mathbf{i})$$

$$2.4\mathbf{i} - 9.6\mathbf{j} = (-a_A\cos 60^\circ + 8.64)\mathbf{i} + (-0.5\alpha + a_A\sin 60^\circ)\mathbf{j}$$

Equating the **i** and **j** components yields:

$$2.4 = -a_A\cos 60^\circ + 8.64 \qquad a_A = 12.5 \text{ m/s}^2 \leftarrow \qquad \textbf{Ans.}$$

$$-9.6 = -0.5\alpha + (12.5)\sin 60^\circ \qquad \alpha = 40.8 \text{ rad/s}^2 \circlearrowleft$$

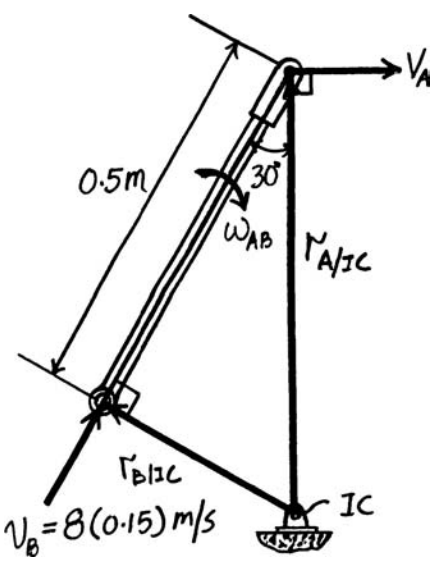

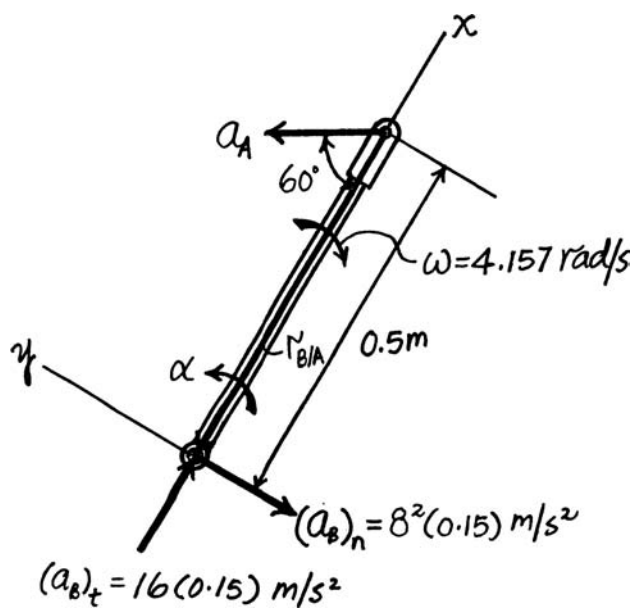

© 2010 Pearson Education, Inc., Upper Saddle River, NJ. All rights reserved. This material is protected under all copyright laws as they currently exist. No portion of this material may be reproduced, in any form or by any means, without permission in writing from the publisher.

R2–7. The small gear which has a mass m can be treated as a uniform disk. If it is released from rest at $\theta = 0°$, and rolls along the fixed circular gear rack, determine the angular velocity of the radial line AB at the instant $\theta = 90°$.

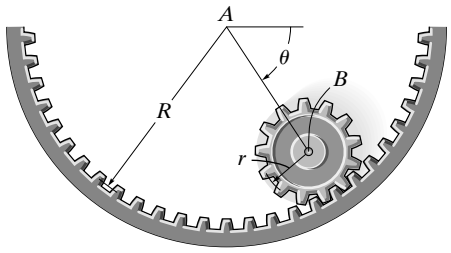

Potential Energy: Datum is set at point A. When the gear is at its final position ($\theta = 90°$), its center of gravity is located $(R - r)$ *below* the datum. Its gravitational potential energy at this position is $-mg(R - r)$. Thus, the initial and final potential energies are

$$V_1 = 0 \qquad V_2 = -mg(R - r)$$

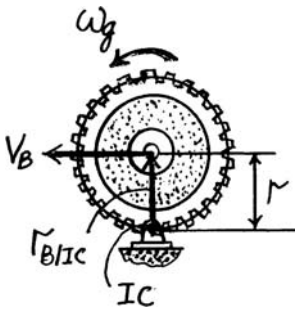

Kinetic Energy: When gear B is at its final position ($\theta = 90°$), the velocity of its mass center is $v_B = \omega_g r$ or $\omega_g = \dfrac{v_B}{r}$ since the gear rolls without slipping on the fixed circular gear track. The mass moment of inertia of the gear about its mass center is $I_B = \frac{1}{2}mr^2$. Since the gear is at rest initially, the initial kinetic energy is $T_1 = 0$. The final kinetic energy is given by

$$T_2 = \frac{1}{2}mv_B^2 + \frac{1}{2}I_B\,\omega_g^2 = \frac{1}{2}mv_B^2 + \frac{1}{2}\left(\frac{1}{2}mr^2\right)\left(\frac{v_B}{r}\right)^2 = \frac{3}{4}mv_B^2$$

Conservation of Energy: Applying Eq. 18–18, we have

$$T_1 + V_1 = T_2 + V_2$$

$$0 + 0 = \frac{3}{4}mv_B^2 + [-mg(R - r)]$$

$$v_B = \sqrt{\frac{4g(R - r)}{3}}$$

Thus, the angular velocity of the radical line AB is given by

$$\omega_{AB} = \frac{v_B}{R - r} = \sqrt{\frac{4g}{3(R - r)}} \qquad \textbf{Ans.}$$

© 2010 Pearson Education, Inc., Upper Saddle River, NJ. All rights reserved. This material is protected under all copyright laws as they currently exist. No portion of this material may be reproduced, in any form or by any means, without permission in writing from the publisher.

***R2–8.** The 50-kg cylinder has an angular velocity of 30 rad/s when it is brought into contact with the surface at C. If the coefficient of kinetic friction is $\mu_k = 0.2$, determine how long it will take for the cylinder to stop spinning. What force is developed in link AB during this time? The axis of the cylinder is connected to *two* symmetrical links. (Only AB is shown.) For the computation, neglect the weight of the links.

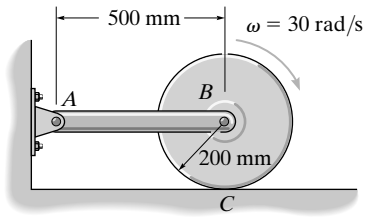

$(+\uparrow)$ $\quad m(v_{Ay})_1 + \Sigma \int_{t_1}^{t_2} F_y\,dt = m(v_{Ay})_2$

$0 + N_C(t) - 50(9.81)(t) = 0 \qquad N_C = 490.5\text{ N}$

$(\overset{+}{\rightarrow})$ $\quad m(v_{Ax})_1 + \Sigma \int_{t_1}^{t_2} F_x\,dt = m(v_{Ax})_2$

$0 + 0.2(490.5)(t) - 2F_{AB}(t) = 0 \qquad F_{AB} = 49.0\text{ N}$ **Ans.**

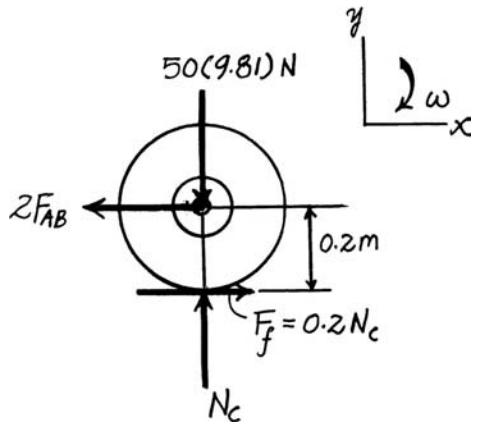

$(\circlearrowleft +)$ $\quad I_B\,\omega_1 + \Sigma \int_{t_1}^{t_2} M_B\,dt = I_B\,\omega_2$

$-\left[\frac{1}{2}(50)(0.2)^2\right](30) + 0.2(490.5)(0.2)(t) = 0$

$t = 1.53\text{ s}$ **Ans.**

R2–9. The gear rack has a mass of 6 kg, and the gears each have a mass of 4 kg and a radius of gyration of $k = 30$ mm about their center. If the rack is originally moving downward at 2 m/s, when $s = 0$, determine the speed of the rack when $s = 600$ mm. The gears are free to rotate about their centers, A and B.

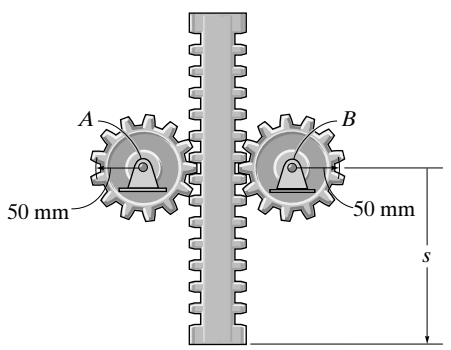

Originally, both gears rotate with an angular velocity of $\omega_t = \frac{2}{0.05} = 40$ rad/s. After the rack has traveled $s = 600$ mm, both gears rotate with an angular velocity of $\omega_2 = \frac{v_2}{0.05}$, where v_2 is the speed of the rack at that moment.

Put datum through points A and B.

$$T_1 + V_1 = T_2 + V_2$$

$$\frac{1}{2}(6)(2)^2 + \left\{\frac{1}{2}\left[4(0.03)^2\right](40)^2\right\} + 0 = \frac{1}{2}(6)v_2^2 + 2\left\{\frac{1}{2}\left[4(0.03)^2\right]\left(\frac{v_2}{0.05}\right)\right\} - 6(9.81)(0.6)$$

$v_2 = 3.46\text{ m/s}$ **Ans.**

© 2010 Pearson Education, Inc., Upper Saddle River, NJ. All rights reserved. This material is protected under all copyright laws as they currently exist. No portion of this material may be reproduced, in any form or by any means, without permission in writing from the publisher.

R2–10. The gear has a mass of 2 kg and a radius of gyration $k_A = 0.15$ m. The connecting link AB (slender rod) and slider block at B have a mass of 4 kg and 1 kg, respectively. If the gear has an angular velocity $\omega = 8$ rad/s at the instant $\theta = 45°$, determine the gear's angular velocity when $\theta = 0°$.

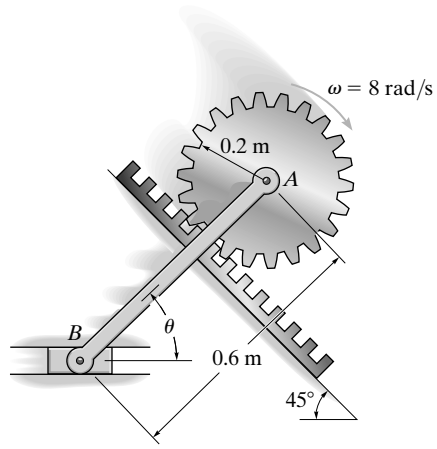

At position 1:

$$(\omega_{AB})_1 = \frac{(v_A)_1}{r_{A/IC}} = \frac{1.6}{0.6} = 2.6667 \text{ rad/s} \qquad (v_B)_1 = 0$$

$$(v_{AB})_1 = (\omega_{AB})_1 r_{G/IC} = 2.6667(0.3) = 0.8 \text{ m/s}$$

At position 2:

$$(\omega_{AB})_2 = \frac{(v_A)_2}{r_{A/IC}} = \frac{\omega_2(0.2)}{\dfrac{0.6}{\cos 45°}} = 0.2357\omega_2$$

$$(v_B)_2 = (\omega_{AB})_2 r_{B/IC} = 0.2357\,\omega_2(0.6) = 0.1414\omega_2$$

$$(v_{AB})_2 = (\omega_{AB})_2 r_{G/IC} = 0.2357\,\omega_2(0.6708) = 0.1581\omega_2$$

$$T_1 = \frac{1}{2}\left[(2)(0.15)^2\right](8)^2 + \frac{1}{2}(2)(1.6)^2 + \frac{1}{2}(4)(0.8)^2 + \frac{1}{2}\left[\frac{1}{12}(4)(0.6)^2\right](2.6667)^2$$

$$= 5.7067 \text{ J}$$

$$T_2 = \frac{1}{2}\left[(2)(0.15)^2\right](\omega_2)^2 + \frac{1}{2}(2)(0.2\,\omega_2)^2 + \frac{1}{2}(4)(0.1581\omega_2)^2$$

$$+ \frac{1}{2}\left[\frac{1}{12}(4)(0.6)^2\right](0.2357\omega_2)^2 + \frac{1}{2}(1)(0.1414\omega_2)^2$$

$$T_2 = 0.1258\,\omega_2^2$$

Put datum through bar in position 2.

$$V_1 = 2(9.81)(0.6 \sin 45°) + 4(9.81)(0.3 \sin 45°) = 16.6481 \text{ J} \qquad V_2 = 0$$

$$T_1 + V_1 = T_2 + V_2$$

$$5.7067 + 16.6481 = 0.1258\omega_2^2 + 0$$

$$\omega_2 = 13.3 \text{ rad/s}$$ **Ans.**

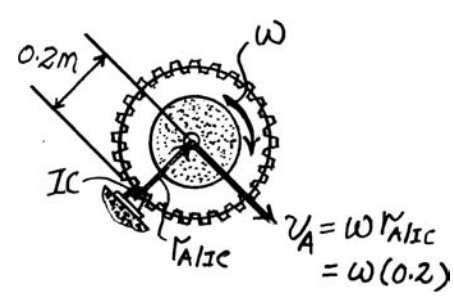

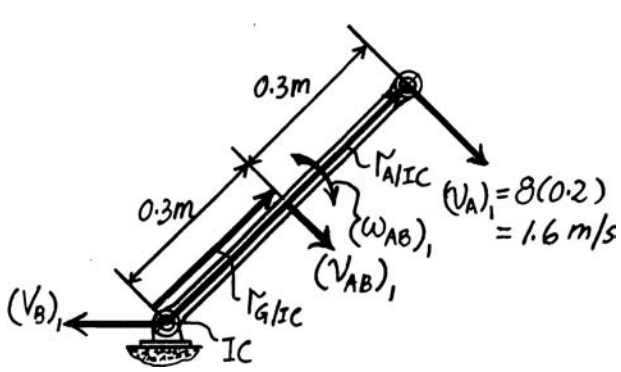

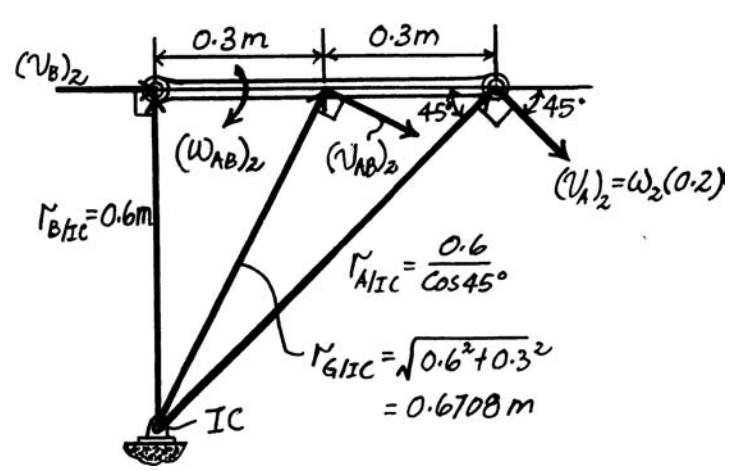

© 2010 Pearson Education, Inc., Upper Saddle River, NJ. All rights reserved. This material is protected under all copyright laws as they currently exist. No portion of this material may be reproduced, in any form or by any means, without permission in writing from the publisher.

***R2–11.** The operation of a doorbell requires the use of an electromagnet, that attracts the iron clapper AB that is pinned at end A and consists of a 0.2-kg slender rod to which is attached a 0.04-kg steel ball having a radius of 6 mm. If the attractive force of the magnet at C is 0.5 N when the switch is on, determine the initial angular acceleration of the clapper. The spring is originally stretched 20 mm.

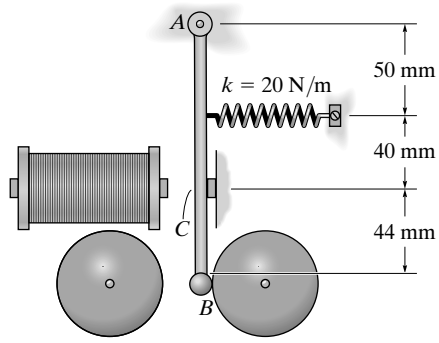

Equation of Motion: The spring force is given by $F_{sp} = kx = 20(0.02) = 0.4$ N. The mass moment of inertia for the clapper AB is $(I_{AB})_A = \frac{1}{12}(0.2)\left(0.134^2\right) + 0.2\left(0.067^2\right) + \frac{2}{5}(0.04)\left(0.006^2\right) + 0.04\left(0.14^2\right) = 1.9816\left(10^{-3}\right)$ kg · m². Applying Eq. 17–12, we have

$$+\Sigma M_A = I_A\,\alpha; \qquad 0.4(0.05) - 0.5(0.09) = -1.9816\left(10^{-3}\right)\alpha$$

$$\alpha = 12.6 \text{ rad/s}^2 \qquad \textbf{Ans.}$$

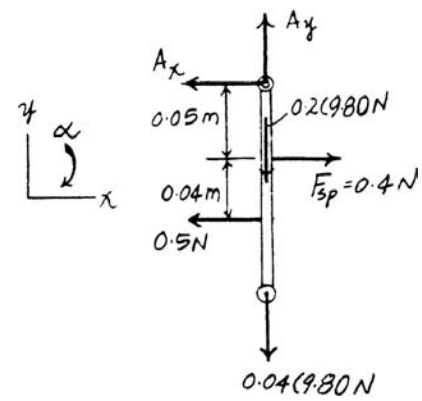

***R2–12.** The revolving door consists of four doors which are attached to an axle AB. Each door can be assumed to be a 50-lb thin plate. Friction at the axle contributes a moment of 2 lb · ft which resists the rotation of the doors. If a woman passes through one door by always pushing with a force $P = 15$ lb perpendicular to the plane of the door as shown, determine the door's angular velocity after it has rotated 90°. The doors are originally at rest.

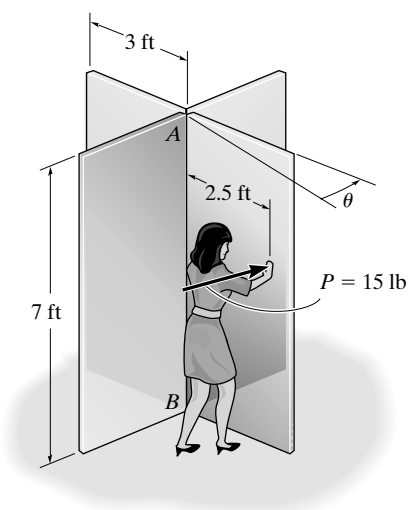

Moment of inertia of the door about axle AB:

$$I_{AB} = 2\left[\frac{1}{12}\left(\frac{100}{32.2}\right)(6)^2\right] = 18.6335 \text{ slug} \cdot \text{ft}^2$$

$$T_1 + \Sigma U_{1-2} = T_2$$

$$0 + \left\{15(2.5)\left(\frac{\pi}{2}\right) - 2\left(\frac{\pi}{2}\right)\right\} = \frac{1}{2}(18.6335)\,\omega^2$$

$$\omega = 2.45 \text{ rad/s} \qquad \textbf{Ans.}$$

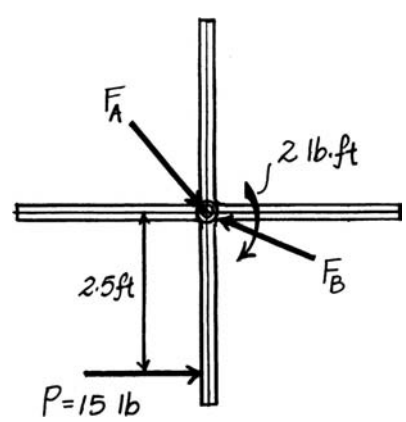

© 2010 Pearson Education, Inc., Upper Saddle River, NJ. All rights reserved. This material is protected under all copyright laws as they currently exist. No portion of this material may be reproduced, in any form or by any means, without permission in writing from the publisher.

R2–13. The 10-lb cylinder rests on the 20-lb dolly. If the system is released from rest, determine the angular velocity of the cylinder in 2 s. The cylinder does not slip on the dolly. Neglect the mass of the wheels on the dolly.

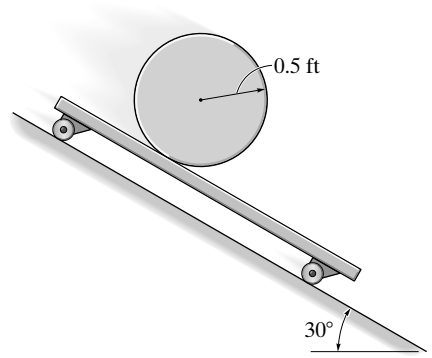

For the cylinder,

$$(+\searrow)\quad m(v_{Cx'})_1 + \Sigma \int_{t_1}^{t_2} F_{x'}\,dt = m(v_{Cx'})_2$$

$$0 + 10\sin 30°(2) - F(2) = \left(\frac{10}{32.2}\right)v_C \qquad \textbf{(1)}$$

$$(\circlearrowleft +)\quad I_C\,\omega_1 + \Sigma \int_{t_1}^{t_2} M_C\,dt = I_C\,\omega_2$$

$$0 + F(0.5)(2) = \left[\frac{1}{2}\left(\frac{10}{32.2}\right)(0.5)^2\right]\omega \qquad \textbf{(2)}$$

For the dolly,

$$(+\searrow)\quad m(v_{Dx'})_1 + \Sigma \int_{t_1}^{t_2} F_{x'}\,dt = m(v_{Dx'})_2$$

$$0 + F(2) + 20\sin 30°(2) = \left(\frac{20}{32.2}\right)v_D \qquad \textbf{(3)}$$

$$(+\searrow)\quad \mathbf{v}_D = \mathbf{v}_C + \mathbf{v}_{D/C}$$

$$v_D = v_C - 0.5\omega \qquad \textbf{(4)}$$

Solving Eqs. (1) to (4) yields:

$$\omega = 0 \qquad \textbf{Ans.}$$

$$v_C = 32.2\ \text{ft/s} \qquad v_D = 32.2\ \text{ft/s} \qquad F = 0$$

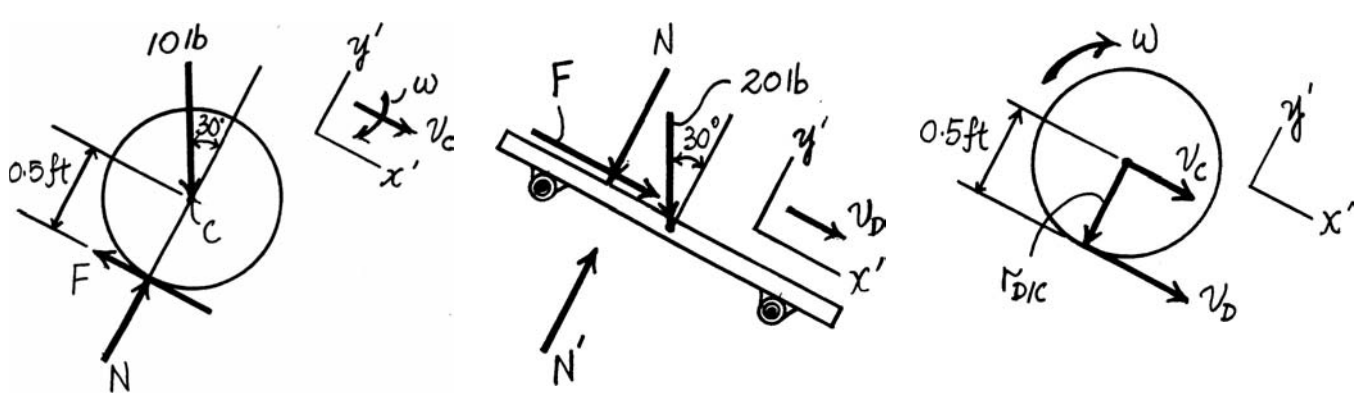

© 2010 Pearson Education, Inc., Upper Saddle River, NJ. All rights reserved. This material is protected under all copyright laws as they currently exist. No portion of this material may be reproduced, in any form or by any means, without permission in writing from the publisher.

R2–14. Solve Prob. R2–13 if the coefficients of static and kinetic friction between the cylinder and the dolly are $\mu_s = 0.3$ and $\mu = 0.2$, respectively.

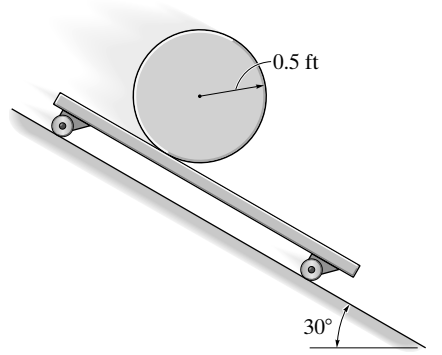

For the cylinder,

$$(+\searrow)\quad m(v_{Cx'})_1 + \Sigma \int_{t_1}^{t_2} F_{x'}\,dt = m(v_{Cx'})_2$$

$$0 + 10\sin 30°(2) - F(2) = \left(\frac{10}{32.2}\right)v_C \qquad \textbf{(1)}$$

$$(\circlearrowleft +)\quad I_C\,\omega_1 + \Sigma \int_{t_1}^{t_2} M_C\,dt = I_C\,\omega_2$$

$$0 + F(0.5)(2) = \left[\frac{1}{2}\left(\frac{10}{32.2}\right)(0.5)^2\right]\omega \qquad \textbf{(2)}$$

For the dolly,

$$(+\searrow)\quad m(v_{Dx'})_1 + \Sigma \int_{t_1}^{t_2} F_{x'}\,dt = m(v_{Dx'})_2$$

$$0 + F(2) + 20\sin 30°(2) = \left(\frac{20}{32.2}\right)v_D \qquad \textbf{(3)}$$

$$(+\searrow)\quad \mathbf{v}_D = \mathbf{v}_C + \mathbf{v}_{D/C}$$

$$v_D = v_C - 0.5\omega \qquad \textbf{(4)}$$

Solving Eqs. (1) to (4) yields:

$$\omega = 0 \qquad \textbf{Ans.}$$

$$v_C = 32.2 \text{ ft/s} \qquad v_D = 32.2 \text{ ft/s} \qquad F = 0$$

Note: No friction force develops.

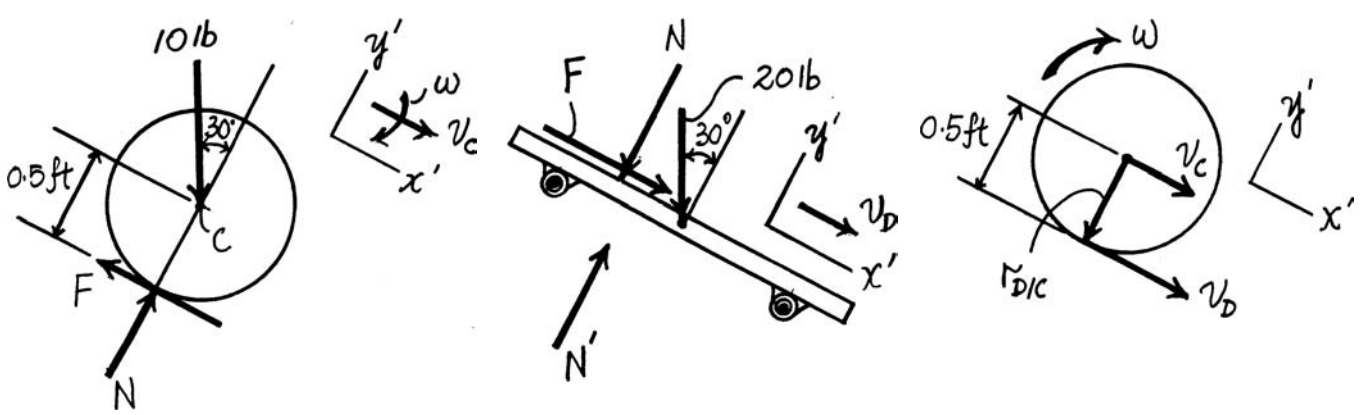

© 2010 Pearson Education, Inc., Upper Saddle River, NJ. All rights reserved. This material is protected under all copyright laws as they currently exist. No portion of this material may be reproduced, in any form or by any means, without permission in writing from the publisher.

R2–15. Gears H and C each have a weight of 0.4 lb and a radius of gyration about their mass center of $(k_H)_B = (k_C)_A = 2$ in. Link AB has a weight of 0.2 lb and a radius of gyration of $(k_{AB})_A = 3$ in., whereas link DE has a weight of 0.15 lb and a radius of gyration of $(k_{DE})_B = 4.5$ in. If *a* couple moment of $M = 3\ \text{lb}\cdot\text{ft}$ is applied to link AB and the assembly is originally at rest, determine the angular velocity of link DE when link AB has rotated 360°. Gear C is prevented from rotating, and motion occurs in the horizontal plane. Also, gear H and link DE rotate together about the same axle at B.

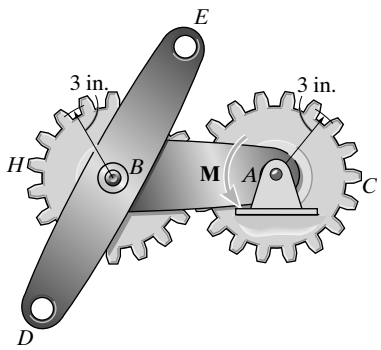

For link AB,

$$v_B = \omega_{AB}\, r_{AB} = \omega_{AB}\left(\frac{6}{12}\right) = 0.5\omega_{AB}$$

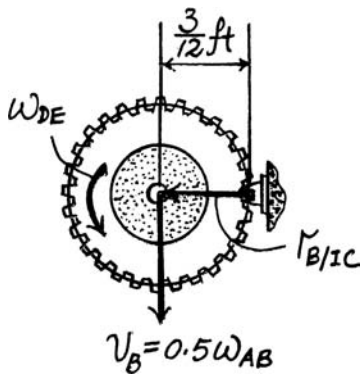

For gear H,

$$\omega_{DE} = \frac{v_B}{r_{B/IC}} = \frac{0.5\omega_{AB}}{3/12} = 2\omega_{AB}$$

$$\omega_{AB} = \frac{1}{2}\omega_{DE}$$

$$v_B = \left(\frac{1}{2}\omega_{DE}\right)\frac{6}{12} = 0.25\omega_{DE}$$

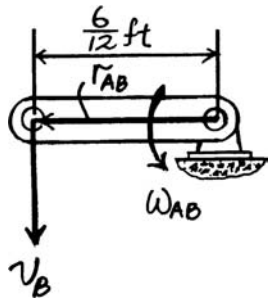

Principle of Work and Energy: For the system,

$$T_1 + \Sigma U_{1-2} = T_2$$

$$0 + 3(2\pi) = \frac{1}{2}\left[\left(\frac{0.2}{32.2}\right)\left(\frac{3}{12}\right)^2\right]\left(\frac{1}{2}\omega_{DE}\right)^2 + \frac{1}{2}\left[\left(\frac{0.4}{32.2}\right)\left(\frac{2}{12}\right)^2\right]\omega_{DE}^2$$

$$+ \frac{1}{2}\left(\frac{0.4}{32.2}\right)(0.25\omega_{DE})^2 + \frac{1}{2}\left[\left(\frac{0.15}{32.2}\right)\left(\frac{4.5}{12}\right)^2\right]\omega_{DE}^2 + \frac{1}{2}\left(\frac{0.15}{32.2}\right)(0.25\omega_{DE})^2$$

$$\omega_{DE} = 132\ \text{rad/s} \qquad \textbf{Ans.}$$

© 2010 Pearson Education, Inc., Upper Saddle River, NJ. All rights reserved. This material is protected under all copyright laws as they currently exist. No portion of this material may be reproduced, in any form or by any means, without permission in writing from the publisher.

***R2–16.** The inner hub of the roller bearing rotates with an angular velocity of $\omega_i = 6$ rad/s, while the outer hub rotates in the opposite direction at $\omega_o = 4$ rad/s. Determine the angular velocity of each of the rollers if they roll on the hubs without slipping.

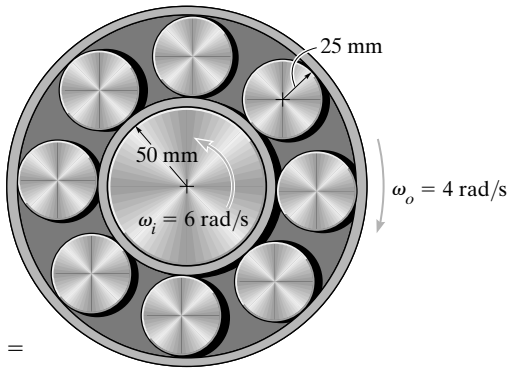

Since the hub does not slip, $v_A = \omega_i r_i = 6(0.05) = 0.3$ m/s and $v_B = \omega_O r_O = 4(0.1) = 0.4$ m/s.

$$\mathbf{v}_B = \mathbf{v}_A + \mathbf{v}_{B/A}$$

$$\left[\underset{\downarrow}{0.4}\right] = \left[\underset{\uparrow}{0.3}\right] + \left[\omega\underset{\downarrow}{(0.05)}\right]$$

$(+\downarrow)$ $\quad 0.4 = -0.3 + 0.05\omega \qquad \omega = 14$ rad/s ↻ **Ans.**

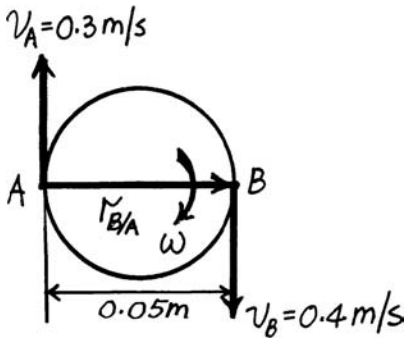

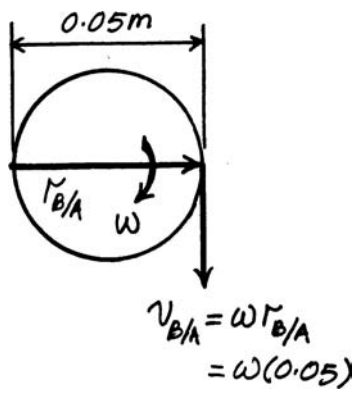

© 2010 Pearson Education, Inc., Upper Saddle River, NJ. All rights reserved. This material is protected under all copyright laws as they currently exist. No portion of this material may be reproduced, in any form or by any means, without permission in writing from the publisher.

R2–17. The hoop (thin ring) has a mass of 5 kg and is released down the inclined plane such that it has a backspin $\omega = 8$ rad/s and its center has a velocity $v_G = 3$ m/s as shown. If the coefficient of kinetic friction between the hoop and the plane is $\mu_k = 0.6$, determine how long the hoop rolls before it stops slipping.

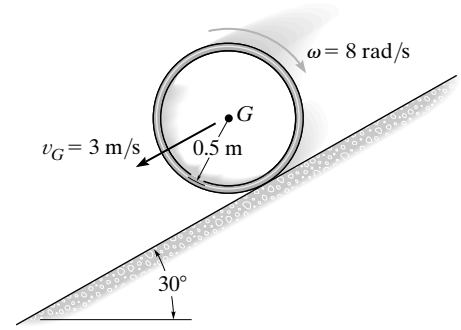

$(+\nwarrow)$ $\quad mv_{y1} + \Sigma \int F_y\, dt = mv_{y2}$

$$0 + N_h(1) - 5(9.81)t\cos 30° = 0$$

$$N_h = 42.479 \text{ N}$$

$$F_h = 0.6N_h = 0.6(42.479 \text{ N}) = 25.487 \text{ N}$$

$(\swarrow +)$ $\quad mv_{x1} + \Sigma \int F_x\, dt = mv_{x2}$

$$5(3) + 5(9.181)\sin 30°(t) - 25.487t = 5v_G$$

$(\circlearrowleft +)$ $\quad (H_G)_1 + \Sigma \int M_G\, dt = (H_G)_2$

$$-5(0.5)^2(8) + 25.487(0.5)(t) = 5(0.5)^2\left(\frac{v_G}{0.5}\right)$$

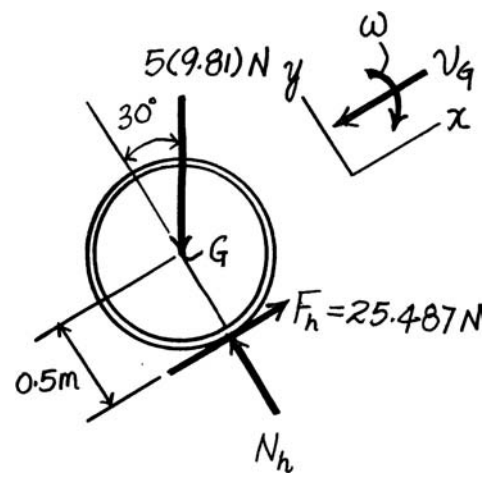

Solving,

$$v_G = 2.75 \text{ m/s}$$

$$t = 1.32 \text{ s}$$ **Ans.**

R2–18. The hoop (thin ring) has a mass of 5 kg and is released down the inclined plane such that it has a backspin $\omega = 8$ rad/s and its center has a velocity $v_G = 3$ m/s as shown. If the coefficient of kinetic friction between the hoop and the plane is $\mu_k = 0.6$, determine the hoop's angular velocity 1 s after it is released.

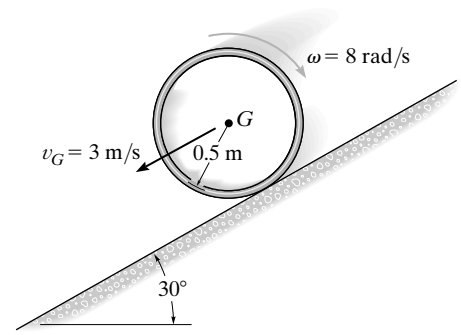

See solution to Prob. R2–17. Since backspin will not stop in $t = 1$ s < 1.32 s, then

$(+\nwarrow)$ $\quad mv_{y1} + \Sigma \int F_y\, dt = mv_{y2}$

$$0 + N_h(t) - 5(9.81)t\cos 30° = 0$$

$$N_h = 42.479 \text{ N}$$

$$F_h = 0.6N_h = 0.6(42.479 \text{ N}) = 25.487 \text{ N}$$

$\circlearrowleft +$ $\quad (H_G)_1 + \Sigma \int M\, dt = (H_G)_2$

$$-5(0.5)^2(8) + 25.487(0.5)(1) = -5(0.5)^2\,\omega$$

$$\omega = 2.19 \text{ rad/s} \circlearrowleft$$ **Ans.**

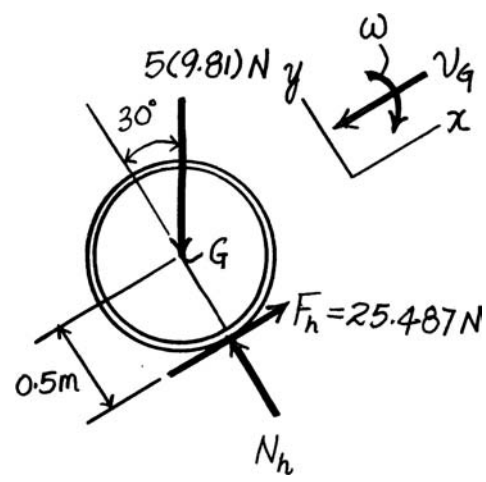

© 2010 Pearson Education, Inc., Upper Saddle River, NJ. All rights reserved. This material is protected under all copyright laws as they currently exist. No portion of this material may be reproduced, in any form or by any means, without permission in writing from the publisher.

R2–19. Determine the angular velocity of rod CD at the instant $\theta = 30°$. Rod AB moves to the left at a constant speed of $v_{AB} = 5$ m/s.

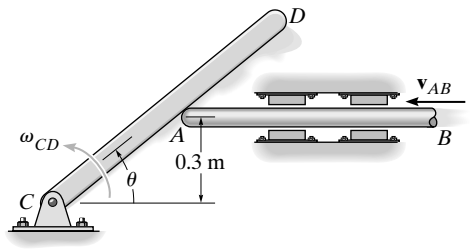

$$x = \frac{0.3}{\tan\theta} = 0.3\cot\theta$$

$$\dot{x} = v_{AB} = -0.3\csc^2\theta\dot{\theta}$$

Here $\dot{\theta} = \omega_{CD}, v_{AB} = -5$ m/s and $\theta = 30°$.

$$-5 = -0.03\csc^2 30°(\omega_{CD}) \qquad \omega_{CD} = 4.17 \text{ rad/s}$$ **Ans.**

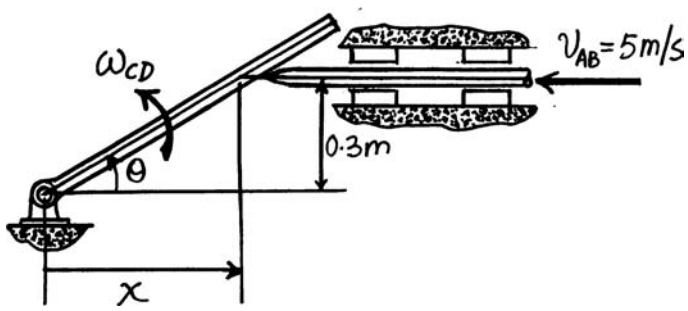

© 2010 Pearson Education, Inc., Upper Saddle River, NJ. All rights reserved. This material is protected under all copyright laws as they currently exist. No portion of this material may be reproduced, in any form or by any means, without permission in writing from the publisher.

***R2–20.** Determine the angular acceleration of rod CD at the instant $\theta = 30°$. Rod AB has zero velocity, i.e., $v_{AB} = 0$, and an acceleration of $a_{AB} = 2\ \text{m/s}^2$ to the right when $\theta = 30°$.

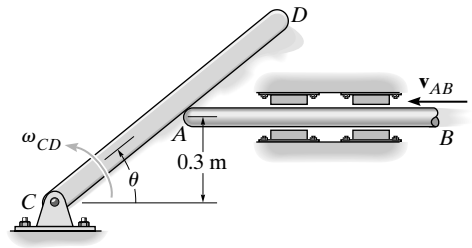

$$x = \frac{0.3}{\tan\theta} = 0.3\cot\theta$$

$$\dot{x} = v_{AB} = -0.3\csc^2\theta\dot{\theta}$$

$$\ddot{x} = a_{AB} = -0.3\left[\csc^2\theta\ddot{\theta} - 2\csc^2\theta\cot\theta\dot{\theta}^2\right] = 0.3\csc^2\theta\left(2\cot\theta\dot{\theta}^2 - \ddot{\theta}\right)$$

Here $\dot{\theta} = \omega_{CD}, v_{AB} = 0, a_{AB} = 2\ \text{m/s}^2, \ddot{\theta} = \alpha_{CD}$, and $\theta = 30°$.

$$0 = -0.3\csc^2 30°(\omega_{CD}) \qquad \omega_{CD} = 0$$

$$2 = 0.3\csc^2 30°\left[2\cot 30°(0)^2 - \alpha_{CD}\right] \qquad \alpha_{CD} = -1.67\ \text{rad/s}^2 \qquad \textbf{Ans.}$$

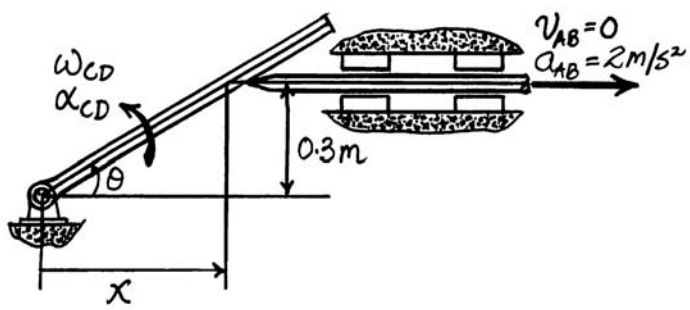

© 2010 Pearson Education, Inc., Upper Saddle River, NJ. All rights reserved. This material is protected under all copyright laws as they currently exist. No portion of this material may be reproduced, in any form or by any means, without permission in writing from the publisher.

R2–21. If the angular velocity of the drum is increased uniformly from 6 rad/s when $t = 0$ to 12 rad/s when $t = 5$ s, determine the magnitudes of the velocity and acceleration of points A and B on the belt when $t = 1$ s. At this instant the points are located as shown.

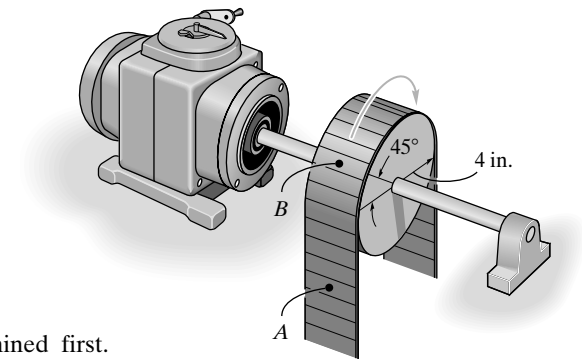

Angular Motion: The angular acceleration of drum must be determined first. Applying Eq. 16–5, we have

$$\omega = \omega_0 + \alpha_c t$$

$$12 = 6 + \alpha_c (5)$$

$$\alpha_c = 1.20 \text{ rad/s}^2$$

The angular velocity of the drum at $t = 1$ s is given by

$$\omega = \omega_0 + \alpha_c t = 6 + 1.20(1) = 7.20 \text{ rad/s}$$

Motion of *P*: The magnitude of the velocity of points A and B can be determined using Eq. 16–8.

$$v_A = v_B = \omega r = 7.20\left(\frac{4}{12}\right) = 2.40 \text{ ft/s} \qquad \textbf{Ans.}$$

Also,

$$a_A = (a_t)_A = \alpha_c r = 1.20\left(\frac{4}{12}\right) = 0.400 \text{ ft/s}^2 \qquad \textbf{Ans.}$$

The tangential and normal components of the acceleration of points B can be determined using Eqs. 16–11 and 16–12, respectively.

$$(a_t)_B = \alpha_c r = 1.20\left(\frac{4}{12}\right) = 0.400 \text{ ft/s}^2$$

$$(a_n)_B = \omega^2 r = \left(7.20^2\right)\left(\frac{4}{12}\right) = 17.28 \text{ ft/s}^2$$

The magnitude of the acceleration of points B is

$$a_B = \sqrt{(a_t)_B^2 + (a_n)_B^2} = \sqrt{0.400^2 + 17.28^2} = 17.3 \text{ ft/s}^2 \qquad \textbf{Ans.}$$

© 2010 Pearson Education, Inc., Upper Saddle River, NJ. All rights reserved. This material is protected under all copyright laws as they currently exist. No portion of this material may be reproduced, in any form or by any means, without permission in writing from the publisher.

R2–22. Pulley A and the attached drum B have a weight of 20 lb and a radius of gyration of $k_B = 0.6$ ft. If pulley P "rolls" downward on the cord without slipping, determine the speed of the 20-lb crate C at the instant $s = 10$ ft. Initially, the crate is released from rest when $s = 5$ ft. For the calculation, neglect the mass of pulley P and the cord.

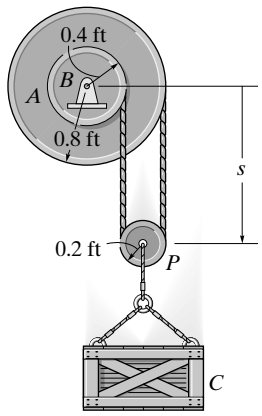

Kinematics: Since pulley A is rotating about a fixed point B and pulley P rolls down without slipping, the velocity of points D and E on the pulley P are given by $v_D = 0.4\omega_A$ and $v_E = 0.8\omega_A$ where ω_A is the angular velocity of pulley A. Thus, the instantaneous center of zero velocity can be located using similar triangles.

$$\frac{x}{0.4\omega_A} = \frac{x + 0.4}{0.8\omega_A} \qquad x = 0.4 \text{ ft}$$

Thus, the velocity of block C is given by

$$\frac{v_C}{0.6} = \frac{0.4\omega_A}{0.4} \qquad v_C = 0.6\omega_A$$

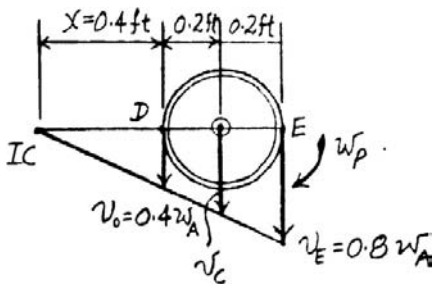

Potential Energy: Datumn is set at point B. When block C is at its initial and final position, its locations are 5 ft and 10 ft *below* the datum. Its initial and final gravitational potential energies are $20(-5) = -100$ ft · lb and $20(-10) = -200$ ft · lb, respectively. Thus, the initial and final potential energy are

$$V_1 = -100 \text{ ft} \cdot \text{lb} \qquad V_2 = -200 \text{ ft} \cdot \text{lb}$$

Kinetic Energy: The mass moment of inertia of pulley A about point B is $I_B = mk_B^2 = \frac{20}{32.2}\left(0.6^2\right) = 0.2236 \text{ slug} \cdot \text{ft}^2$. Since the system is initially at rest, the initial kinetic energy is $T_1 = 0$. The final kinetic energy is given by

$$T_2 = \frac{1}{2} m_C v_C^2 + \frac{1}{2} I_B \omega_A^2$$

$$= \frac{1}{2}\left(\frac{20}{32.2}\right)(0.6\omega_A)^2 + \frac{1}{2}(0.2236)\,\omega_A^2$$

$$= 0.2236\omega_A^2$$

Conservation of Energy: Applying Eq. 18–19, we have

$$T_1 + V_1 = T_2 + V_2$$

$$0 + -100 = 0.2236\omega_A^2 + (-200)$$

$$\omega_A = 21.15 \text{ rad/s}$$

Thus, the speed of block C at the instant $s = 10$ ft is

$$v_C = 0.6\omega_A = 0.6(21.15) = 12.7 \text{ ft/s} \qquad \textbf{Ans.}$$

© 2010 Pearson Education, Inc., Upper Saddle River, NJ. All rights reserved. This material is protected under all copyright laws as they currently exist. No portion of this material may be reproduced, in any form or by any means, without permission in writing from the publisher.

R2–23. By pressing down with the finger at B, a thin ring having a mass m is given an initial velocity v_1 and a backspin ω_1 when the finger is released. If the coefficient of kinetic friction between the table and the ring is μ, determine the distance the ring travels forward before the backspin stops.

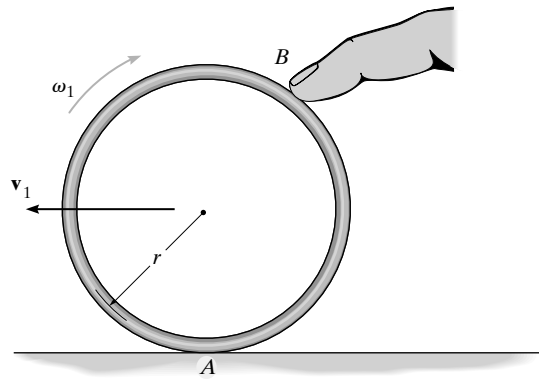

Equations of Motion: The mass moment of inertia of the ring about its mass center is given by $I_G = mr^2$. Applying Eq. 17–16, we have

$$+\uparrow \Sigma F_y = m(a_G)_y; \qquad N - mg = 0 \qquad N = mg$$

$$\overset{+}{\rightarrow} \Sigma F_x = m(a_G)_x; \qquad \mu mg = ma_G \qquad a_G = \mu g$$

$$\circlearrowleft + \Sigma M_G = I_G\,\alpha; \qquad \mu mgr = mr^2\,\alpha \qquad \alpha = \frac{\mu g}{r}$$

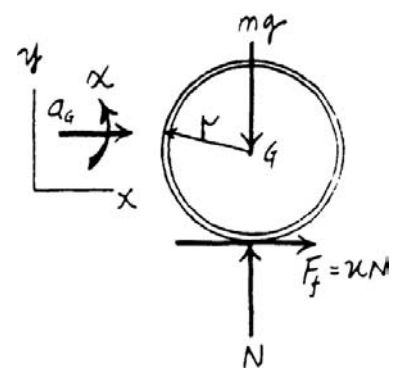

Kinematics: The time required for the ring to stop back spinning can be determined by applying Eq. 16–5.

$$\omega = \omega_0 + \alpha_c\,t$$

$$(\circlearrowleft +) \qquad 0 = \omega_1 + \left(-\frac{\mu g}{r}\right)t$$

$$t = \frac{\omega_1\,r}{\mu g}$$

The distance traveled by the ring just before back spinning stops can be determine by applying Eq. 12–5.

$$(\overset{+}{\leftarrow}) \qquad s = s_0 + v_0\,t + \frac{1}{2}a_c\,t^2$$

$$= 0 + v_1\left(\frac{\omega_1\,r}{\mu g}\right) + \frac{1}{2}(-\mu g)\left(\frac{\omega_1 r}{\mu g}\right)^2$$

$$= \frac{\omega_1\,r}{2\mu g}(2v_1 - \omega_1 r) \qquad \textbf{Ans.}$$

© 2010 Pearson Education, Inc., Upper Saddle River, NJ. All rights reserved. This material is protected under all copyright laws as they currently exist. No portion of this material may be reproduced, in any form or by any means, without permission in writing from the publisher.

***R2–24.** The pavement roller is traveling down the incline at $v_1 = 5$ ft/s when the motor is disengaged. Determine the speed of the roller when it has traveled 20 ft down the plane. The body of the roller, excluding the rollers, has a weight of 8000 lb and a center of gravity at G. Each of the two rear rollers weighs 400 lb and has a radius of gyration of $k_A = 3.3$ ft. The front roller has a weight of 800 lb and a radius of gyration of $k_B = 1.8$ ft. The rollers do not slip as they turn.

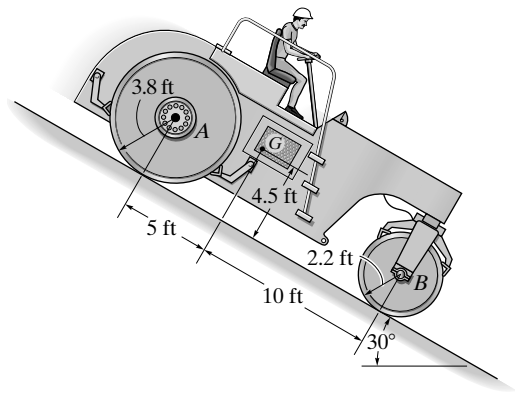

The wheels roll without slipping, hence $\omega = \dfrac{v_G}{r}$.

$$T_1 = \frac{1}{2}\left(\frac{8000 + 800 + 800}{32.2}\right)(5)^2 + \frac{1}{2}\left[\left(\frac{800}{32.2}\right)(3.3)^2\right]\left(\frac{5}{3.8}\right)^2 + \frac{1}{2}\left[\left(\frac{800}{32.2}\right)(1.8)^2\right]\left(\frac{5}{2.2}\right)^2$$

$$= 4168.81 \text{ ft} \cdot \text{lb}$$

$$T_2 = \frac{1}{2}\left(\frac{8000 + 800 + 800}{32.2}\right)v^2 + \frac{1}{2}\left[\left(\frac{800}{32.2}\right)(3.3)^2\right]\left(\frac{v}{3.8}\right)^2 + \frac{1}{2}\left[\left(\frac{800}{32.2}\right)(1.8)^2\right]\left(\frac{v}{2.2}\right)^2$$

$$= 166.753\, v^2$$

Put datum through the mass center of the wheels and body of the roller when it is in the initial position.

$$V_1 = 0$$

$$V_2 = -800(20 \sin 30°) - 8000(20 \sin 30°) - 800(20 \sin 30°)$$

$$= -96000 \text{ ft} \cdot \text{lb}$$

$$T_1 + V_1 = T_2 + V_2$$

$$4168.81 + 0 = 166.753v^2 - 96000$$

$$v = 24.5 \text{ ft/s} \qquad \textbf{Ans.}$$

R2–25. The cylinder B rolls on the fixed cylinder A without slipping. If bar CD rotates with an angular velocity $\omega_{CD} = 5$ rad/s, determine the angular velocity of cylinder B. Point C is a fixed point.

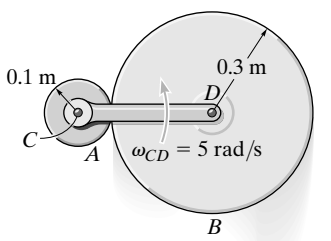

$$v_D = 5(0.4) = 2 \text{ m/s}$$

$$\omega_B = \frac{2}{0.3} = 6.67 \text{ rad/s} \qquad \textbf{Ans.}$$

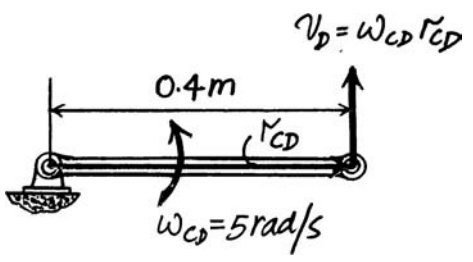

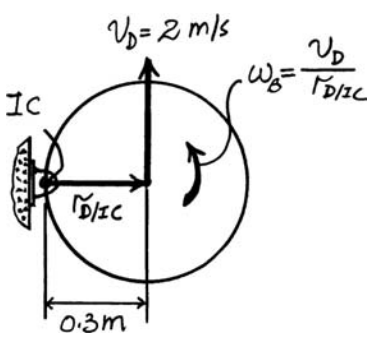

© 2010 Pearson Education, Inc., Upper Saddle River, NJ. All rights reserved. This material is protected under all copyright laws as they currently exist. No portion of this material may be reproduced, in any form or by any means, without permission in writing from the publisher.

R2–26. The disk has a mass M and a radius R. If a block of mass m is attached to the cord, determine the angular acceleration of the disk when the block is released from rest. Also, what is the distance the block falls from rest in the time t?

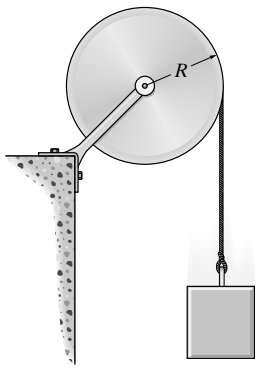

$$I_0 = \frac{1}{2}MR^2$$

$$\circlearrowleft + \Sigma M_O = \Sigma tM_k)_0; \qquad mgR = \frac{1}{2}MR^2(\alpha) + m(\alpha R)R$$

$$\alpha = \frac{2mg}{R(M + 2m)} \qquad \textbf{Ans.}$$

The displacement $h = R\theta$, hence $\theta = \dfrac{h}{R}$

$$\theta - \theta_0 + \omega_0 t + \frac{1}{2}\alpha_c t^2$$

$$\frac{h}{R} = 0 + 0 + \frac{1}{2}\left(\frac{2mg}{R(M + 2m)}\right)t^2$$

$$h = \frac{mg}{M + 2m}t^2 \qquad \textbf{Ans.}$$

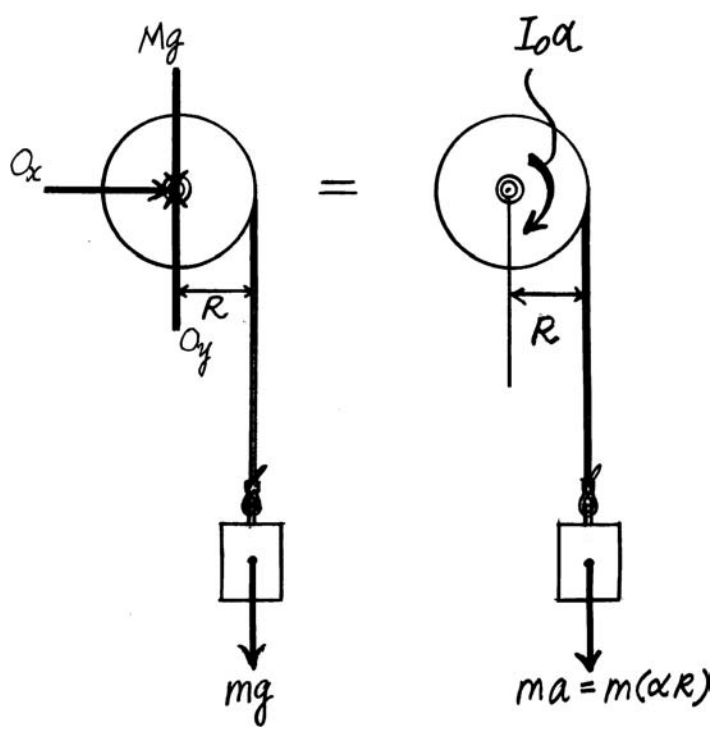

© 2010 Pearson Education, Inc., Upper Saddle River, NJ. All rights reserved. This material is protected under all copyright laws as they currently exist. No portion of this material may be reproduced, in any form or by any means, without permission in writing from the publisher.

R2–27. The tub of the mixer has a weight of 70 lb and a radius of gyration $k_G = 1.3$ ft about its center of gravity G. If a constant torque $M = 60$ lb · ft is applied to the dumping wheel, determine the angular velocity of the tub when it has rotated $\theta = 90°$. Originally the tub is at rest when $\theta = 0°$. Neglect the mass of the wheel.

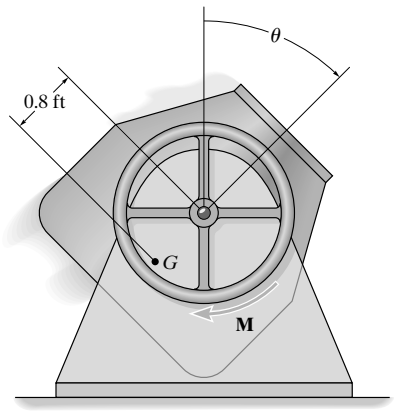

$$T_1 + \Sigma U_{1-2} = T_2$$

$$0 + 60\left(\frac{\pi}{2}\right) - 70(0.8) = \frac{1}{2}\left[\left(\frac{70}{32.2}\right)(1.3)^2\right](\omega)^2 + \frac{1}{2}\left[\frac{70}{32.2}\right](0.8\omega)^2$$

$$\omega = 3.89 \text{ rad/s}$$ **Ans.**

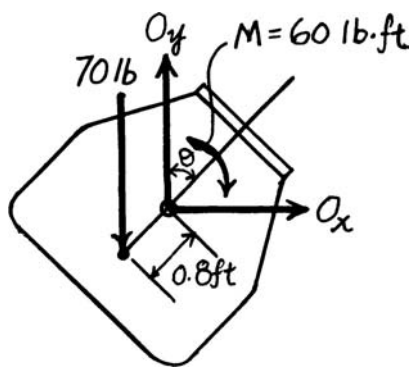

***R2–28.** Solve Prob. R2–27 if the applied torque is $M = (50\theta)$ lb · ft, where θ is in radians.

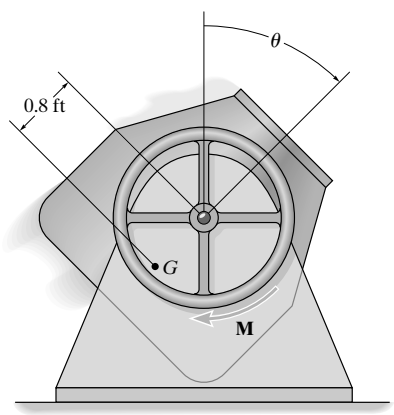

$$T_1 + \Sigma U_{1-2} = T_2$$

$$0 + \int_0^{\pi/2} 50\theta \, d\theta - 70(0.8) = \frac{1}{2}\left[\left(\frac{70}{32.2}\right)(1.3)^2\right]\omega^2 + \frac{1}{2}\left[\frac{70}{32.2}\right](0.8\omega)^2$$

$$\omega = 1.50 \text{ rad/s}$$ **Ans.**

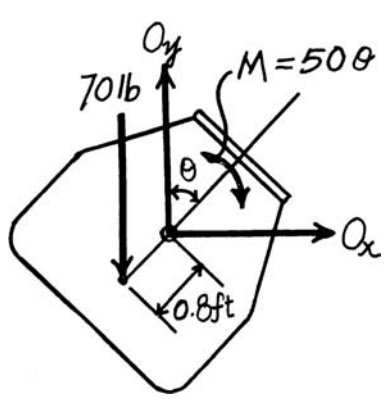

© 2010 Pearson Education, Inc., Upper Saddle River, NJ. All rights reserved. This material is protected under all copyright laws as they currently exist. No portion of this material may be reproduced, in any form or by any means, without permission in writing from the publisher.

R2–29. The spool has a weight of 30 lb and a radius of gyration $k_O = 0.45$ ft. A cord is wrapped around the spool's inner hub and its end subjected to a horizontal force $P = 5$ lb. Determine the spool's angular velocity in 4 s starting from rest. Assume the spool rolls without slipping.

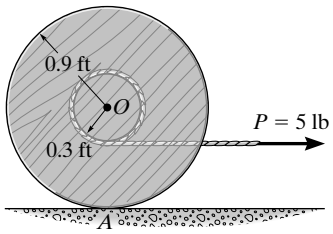

$$(+\circlearrowleft) \qquad I_A\,\omega_1 + \Sigma\int_{t_1}^{t_2} M_A\,dt = I_A\omega_2$$

$$0 + 5(0.6)(4) = \left[\left(\frac{30}{32.2}\right)(0.45)^2 + \left(\frac{30}{32.2}\right)(0.9)^2\right]\omega_2$$

$$\omega_2 = 12.7 \text{ rad/s}$$ **Ans.**

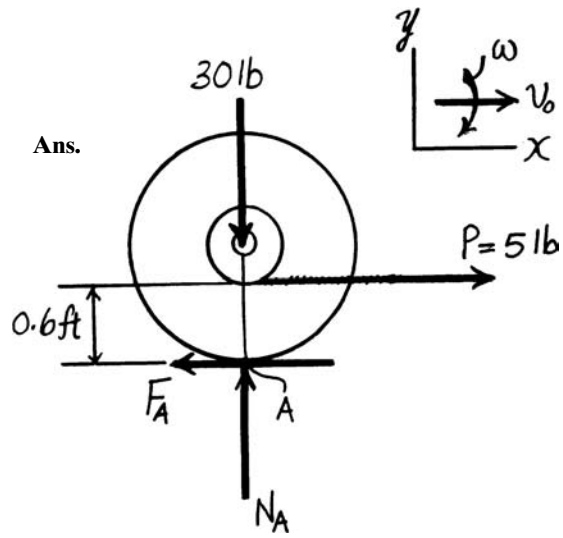

R2–30. The 75-kg man and 40-kg boy sit on the horizontal seesaw, which has negligible mass. At the instant the man lifts his feet from the ground, determine their accelerations if each sits upright, i.e., they do not rotate. The centers of mass of the man and boy are at G_m and G_b, respectively.

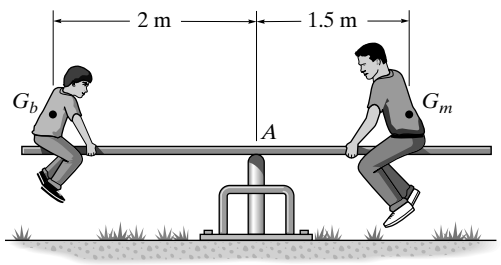

$$\circlearrowleft + \Sigma M_A = \Sigma(M_k)_A; \qquad 40(9.81)(2) - 75(9.81)(1.5)$$

$$= -40a_b\,(2) - 75a_m\,(1.5) \qquad \textbf{[1]}$$

Since the seesaw is rotating about point A, then

$$\alpha = \frac{a_b}{2} = \frac{a_m}{1.5} \qquad \text{or} \qquad a_m = 0.75a_b \qquad \textbf{[2]}$$

Solving Eqs. (1) and (2) yields:

$$a_m = 1.45 \text{ m/s}^2 \qquad a_b = 1.94 \text{ m/s}^2$$ **Ans.**

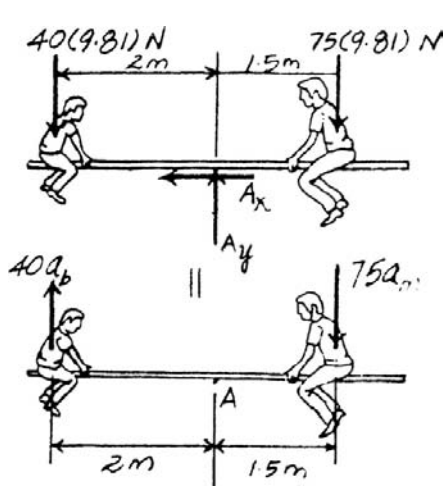

© 2010 Pearson Education, Inc., Upper Saddle River, NJ. All rights reserved. This material is protected under all copyright laws as they currently exist. No portion of this material may be reproduced, in any form or by any means, without permission in writing from the publisher.

R2–31. A sphere and cylinder are released from rest on the ramp at $t = 0$. If each has a mass m and a radius r, determine their angular velocities at time t. Assume no slipping occurs.

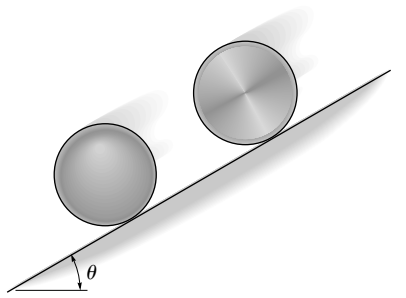

Principle of Impulse and Momentum: For the sphere,

$$(+\circlearrowright) \qquad I_A\,\omega_1 + \Sigma \int_{t_1}^{t_2} M_A\,dt = I_A\omega_2$$

$$0 + mg\sin\theta(r)(t) = \left[\frac{2}{5}mr^2 + mr^2\right](\omega_S)_2$$

$$(\omega_S)_2 = \frac{5g\sin\theta}{7r}\,t \qquad \textbf{Ans.}$$

Principle of Impulse and Momentum: For the cyclinder,

$$(+\circlearrowright) \qquad I_A\,\omega_1 + \Sigma \int_{t_1}^{t_2} M_A\,dt = I_A\omega_2$$

$$0 + mg\sin\theta(r)(t) = \left[\frac{1}{2}mr^2 + mr^2\right](\omega_C)_2$$

$$(\omega_C)_2 = \frac{2g\sin\theta}{3r}\,t \qquad \textbf{Ans.}$$

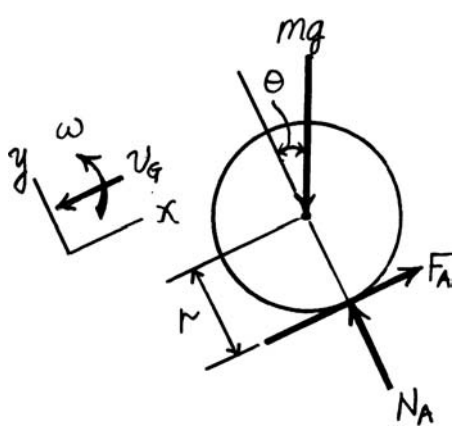

© 2010 Pearson Education, Inc., Upper Saddle River, NJ. All rights reserved. This material is protected under all copyright laws as they currently exist. No portion of this material may be reproduced, in any form or by any means, without permission in writing from the publisher.

***R2–32.** At a given instant, link AB has an angular acceleration $\alpha_{AB} = 12\ \text{rad/s}^2$ and an angular velocity $\omega_{AB} = 4\ \text{rad/s}$. Determine the angular velocity and angular acceleration of link CD at this instant.

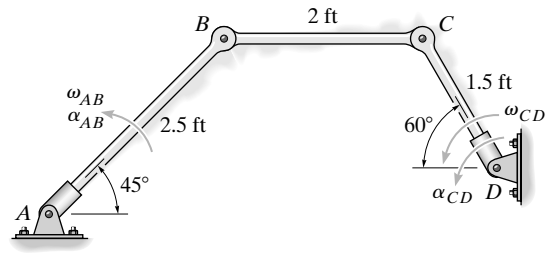

$$\mathbf{v}_C = \mathbf{v}_B + \mathbf{v}_{C/B}$$

$$\begin{bmatrix} v_C \\ 30^\circ \nearrow \end{bmatrix} = \begin{bmatrix} 10 \\ 45^\circ \nwarrow \end{bmatrix} + \begin{bmatrix} 2\omega_{BC} \\ \downarrow \end{bmatrix}$$

$(\overset{+}{\leftarrow})$ $\quad v_C \cos 30^\circ = 10 \cos 45^\circ + 0$

$(+\downarrow)$ $\quad v_C \sin 30^\circ = -10 \sin 45^\circ + 2\omega_{BC}$

$$\omega_{BC} = 5.58\ \text{rad/s}$$

$$v_C = 8.16\ \text{ft/s}$$

$$\omega_{CD} = \frac{8.16}{1.5} = 5.44\ \text{rad/s} \qquad \textbf{Ans.}$$

$$\mathbf{a}_C = \mathbf{a}_B + \mathbf{a}_{C/B}$$

$$\begin{bmatrix} 44.44 \\ 60^\circ \nwarrow \end{bmatrix} + \begin{bmatrix} (a_C)_t \\ 30^\circ \nearrow \end{bmatrix} = \begin{bmatrix} 30 \\ 45^\circ \nwarrow \end{bmatrix} + \begin{bmatrix} 40 \\ 45^\circ \nearrow \end{bmatrix} + \begin{bmatrix} 2(5.58)^2 \\ \leftarrow \end{bmatrix} + \begin{bmatrix} 2\alpha_{BC} \\ \downarrow \end{bmatrix}$$

$(\overset{+}{\leftarrow})$ $\quad -44.44 \cos 60^\circ + (a_C)_t \cos 30^\circ = 30 \cos 45^\circ + 40 \cos 45^\circ + 62.21$

$(+\downarrow)$ $\quad 44.44 \sin 60^\circ + (a_C)_t \sin 30^\circ = -30 \sin 45^\circ + 40 \sin 45^\circ + 2\alpha_{BC}$

$$(a_C)_t = 155\ \text{ft/s}^2 \qquad \alpha_{BC} = 54.4\ \text{rad/s}^2$$

$$\alpha_{CD} = \frac{155}{1.5} = 103\ \text{rad/s}^2 \circlearrowleft \qquad \textbf{Ans.}$$

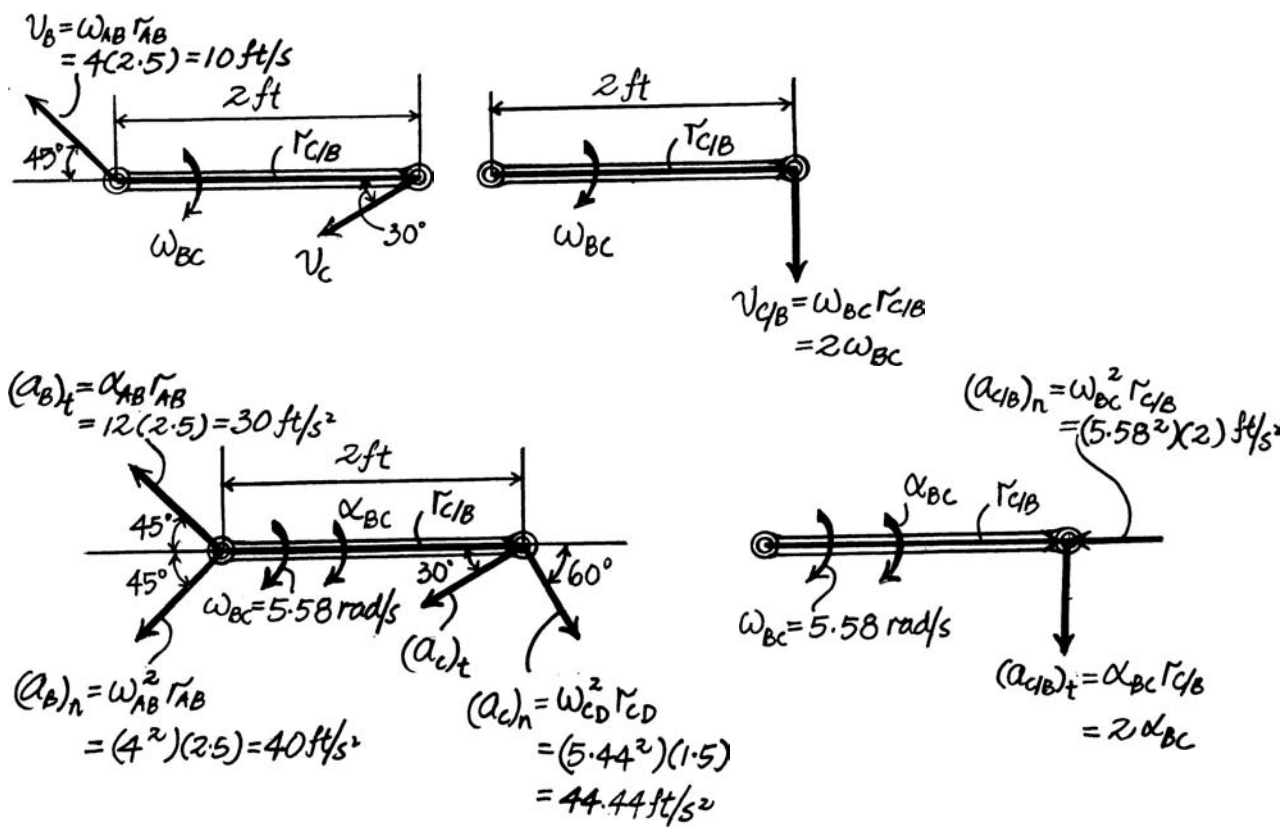

© 2010 Pearson Education, Inc., Upper Saddle River, NJ. All rights reserved. This material is protected under all copyright laws as they currently exist. No portion of this material may be reproduced, in any form or by any means, without permission in writing from the publisher.

R2–33. At a given instant, link CD has an angular acceleration $\alpha_{CD} = 5\ \text{rad/s}^2$ and an angular velocity $\omega_{CD} = 2\ \text{rad/s}$. Determine the angular velocity and angular acceleration of link AB at this instant.

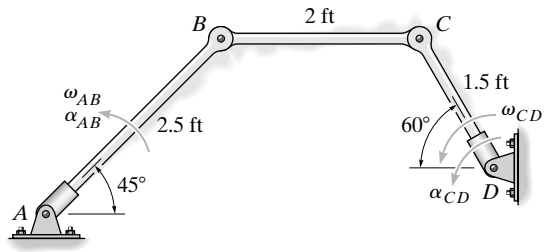

$$\frac{r_{IC-C}}{\sin 45°} = \frac{2}{\sin 75°} \qquad r_{IC-C} = 1.464\ \text{ft}$$

$$\frac{r_{IC-B}}{\sin 60°} = \frac{2}{\sin 75°} \qquad r_{IC-B} = 1.793\ \text{ft}$$

$$\omega_{BC} = \frac{3}{1.464} = 2.0490\ \text{rad/s}$$

$$v_B = 2.0490(1.793) = 3.6742\ \text{ft/s}$$

$$\omega_{AB} = \frac{3.6742}{2.5} = 1.47\ \text{rad/s}\circlearrowleft \qquad \textbf{Ans.}$$

$$(a_B)_n = \frac{v_B^2}{r_{BA}} = \frac{(3.6742)^2}{2.5} = 5.4000\ \text{ft/s}^2$$

$$(a_C)_n = \frac{v_C^2}{r_{CD}} = \frac{(3)^2}{1.5} = 6\ \text{ft/s}^2$$

$$(a_C)_t = \alpha_{CD}(r_{CD}) = 5(1.5) = 7.5\ \text{ft/s}^2$$

$$\mathbf{a}_B = \mathbf{a}_C + \alpha \times \mathbf{r}_{B/C} - \omega^2\,\mathbf{r}_{B/C}$$

$$-5.400\cos 45°\mathbf{i} - 5.400\sin 45°\mathbf{j} - (a_B)_t\cos 45°\mathbf{i} + (a_B)_t\sin 45°\mathbf{j} = 6\sin 30°\mathbf{i} - 6\cos 30°\mathbf{j}$$

$$-7.5\cos 30°\mathbf{i} - 7.5\sin 30°\mathbf{j} + (\alpha\mathbf{k}) \times (-2\mathbf{i}) - (2.0490)^2(-2\mathbf{i})$$

$$-3.818 - (a_B)_t(0.7071) = 3 - 6.495 + 8.3971$$

$$-3.818 + (a_B)_t(0.7071) = -5.1962 - 3.75 - 2\alpha$$

$$(a_B)_t = -12.332\ \text{ft/s}^2$$

$$\alpha = 1.80\ \text{rad/s}^2$$

$$\alpha_{AB} = \frac{12.332}{2.5} = 4.93\ \text{rad/s}^2 \circlearrowright \qquad \textbf{Ans.}$$

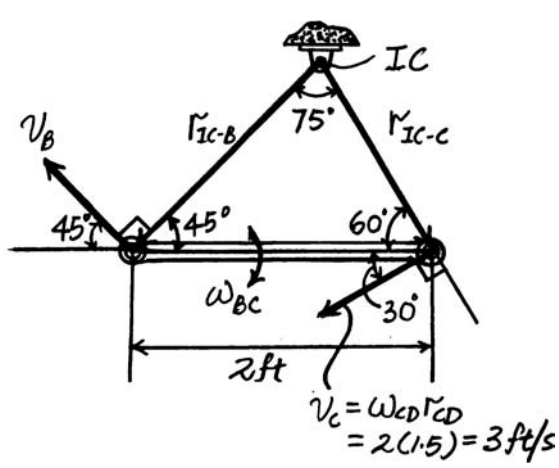

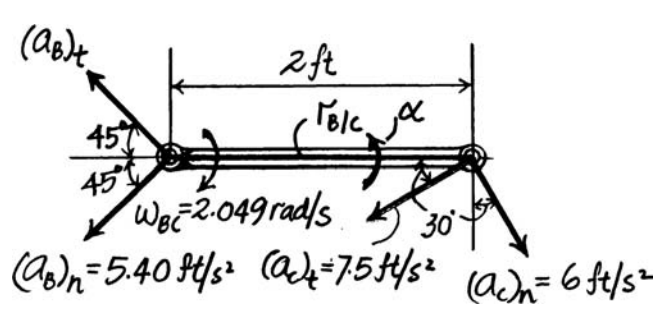

© 2010 Pearson Education, Inc., Upper Saddle River, NJ. All rights reserved. This material is protected under all copyright laws as they currently exist. No portion of this material may be reproduced, in any form or by any means, without permission in writing from the publisher.

R2–34. The spool and the wire wrapped around its core have a mass of 50 kg and a centroidal radius of gyration of $k_G = 235$ mm. If the coefficient of kinetic friction at the surface is $\mu_k = 0.15$, determine the angular acceleration of the spool after it is released from rest.

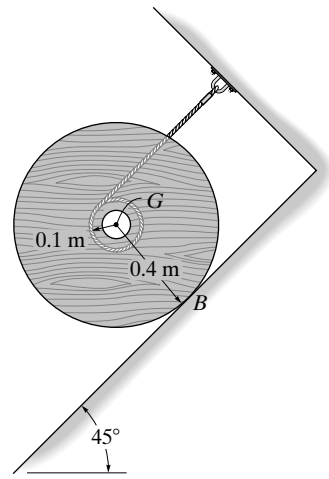

$$I_G = mk_G^2 = 500(0.235)^2 = 2.76125 \text{ kg}\cdot\text{m}^2$$

$+\swarrow \Sigma F_{x'} = m(a_G)_{x'}$; $\quad 50(9.81)\sin 45° - T - 0.15N_B = 50a_G$ **(1)**

$+\nwarrow \Sigma F_{y'} = m(a_G)_{y'}$; $\quad N_B - 50(9.81)\cos 45° = 0$ **(2)**

$\circlearrowleft + \Sigma M_G = I_G\,\alpha$; $\quad T(0.1) - 0.15N_B(0.4) = 2.76125\alpha$ **(3)**

The spool does not slip at point A, therefore

$$a_G = 0.1\alpha \qquad \textbf{(4)}$$

Solving Eqs. (1) to (4) yields:

$$N_B = 346.8 \text{ N} \qquad T = 281.5 \text{ N} \qquad a_G = 0.2659 \text{ m/s}^2$$

$$\alpha = 2.66 \text{ rad/s}^2 \circlearrowright \qquad \textbf{Ans.}$$

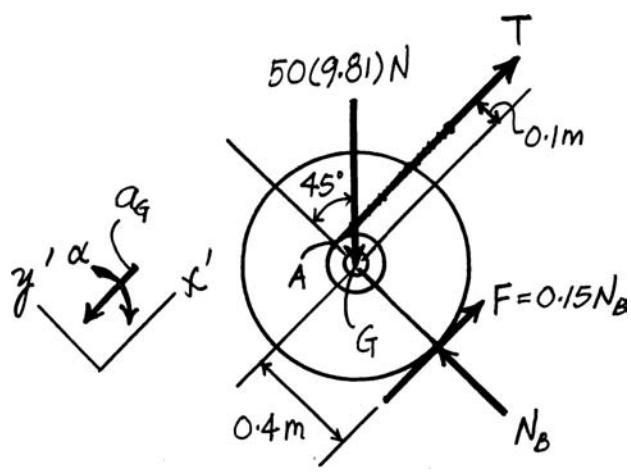

© 2010 Pearson Education, Inc., Upper Saddle River, NJ. All rights reserved. This material is protected under all copyright laws as they currently exist. No portion of this material may be reproduced, in any form or by any means, without permission in writing from the publisher.

R2–35. The bar is confined to move along the vertical and inclined planes. If the velocity of the roller at A is $v_A = 6$ ft/s when $\theta = 45°$, determine the bar's angular velocity and the velocity of B at this instant.

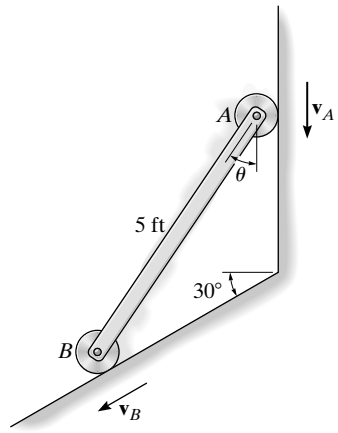

$$s_B \cos 30° = 5 \sin \theta$$

$$\dot{s}_B = 5.774 \sin \theta$$

$$\ddot{s}_B = 5.774 \cos \theta \dot{\theta} \qquad \textbf{(1)}$$

$$5 \cos \theta = s_A + s_B \sin 30°$$

$$-5 \sin \theta \ddot{\theta} = \dot{s}_A + \dot{s}_B \sin 30° \qquad \textbf{(2)}$$

Combine Eqs. (1) and (2):

$$-5 \sin \theta \dot{\theta} = -6 + 5.774 \cos \theta(\dot{\theta})(\sin 30°)$$

$$-3.536\dot{\theta} = -6 + 2.041\dot{\theta}$$

$$\omega = \theta = 1.08 \text{ rad/s} \qquad \textbf{Ans.}$$

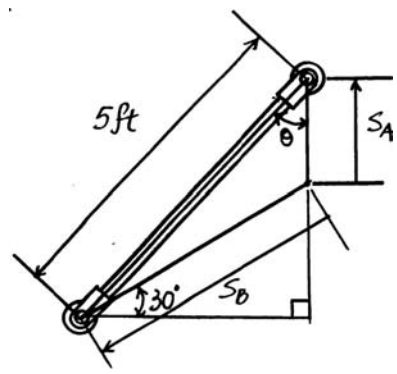

From Eq. (1),

$$v_B = s_B = 5.774 \cos 45°(1.076) = 4.39 \text{ ft/s} \qquad \textbf{Ans.}$$

***R2–36.** The bar is confined to move along the vertical and inclined planes. If the roller at A has a constant velocity of $v_A = 6$ ft/s, determine the bar's angular acceleration and the acceleration of B when $\theta = 45°$.

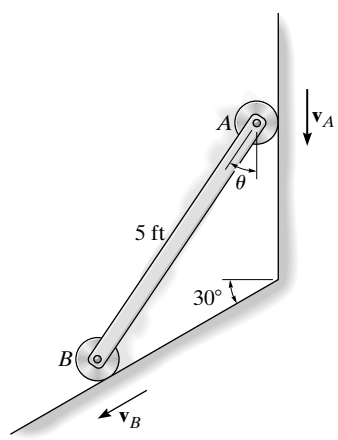

See solution to Prob. R2–35.

Taking the time derivatives of Eqs. (1) and (2) yields:

$$a_B = \ddot{s}_B = -5.774 \sin \theta(\dot{\theta})^2 + 5.774 \cos \theta(\ddot{\theta})$$

$$-5 \cos \theta \dot{\theta}^2 - 5 \sin \theta(\ddot{\theta}) = \ddot{s}_A + \ddot{s}_B \sin 30°$$

Substitute the data:

$$a_B = -5.774 \sin 45°(1.076)^2 + 5.774 \cos 45°(\ddot{\theta})$$

$$-5 \cos 45°(1.076)^2 - 5 \sin 45°(\ddot{\theta}) = 0 + a_B \sin 30°$$

$$a_B = -4.726 + 4.083\,\ddot{\theta}$$

$$a_B = -8.185 - 7.071\,\ddot{\theta}$$

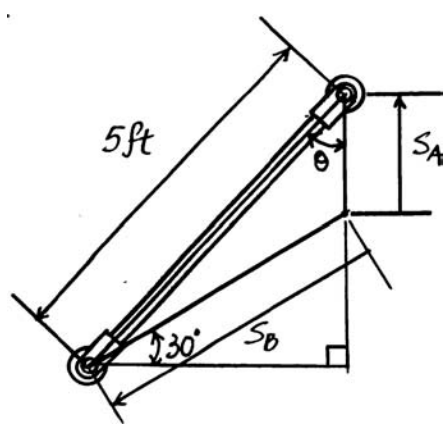

Solving:

$$\dot{\theta} = -0.310 \text{ rad/s}^2 \qquad \textbf{Ans.}$$

$$a_B = -5.99 \text{ ft/s}^2 \qquad \textbf{Ans.}$$

© 2010 Pearson Education, Inc., Upper Saddle River, NJ. All rights reserved. This material is protected under all copyright laws as they currently exist. No portion of this material may be reproduced, in any form or by any means, without permission in writing from the publisher.

R2–37. The uniform girder AB has a mass of 8 Mg. Determine the internal axial force, shear, and bending moment at the center of the girder if a crane gives it an upward acceleration of 3 m/s^2.

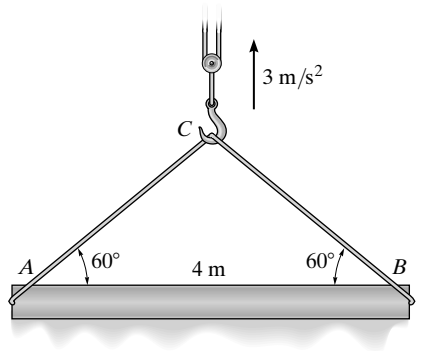

Equations of Motion: By considering the entire beam [FBD(a)], we have

$+\uparrow \Sigma F_y = ma_y;\qquad 2T\sin 60° - 8000(9.81) = 8000(3)$

$$T = 59166.86\text{ N}$$

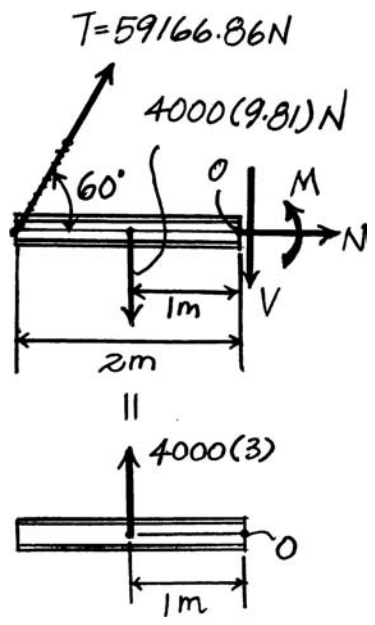

From the FBD(b) (beam segment),

$\circlearrowleft + \Sigma M_O = \Sigma (M_k)_O;\qquad M + 4000(9.81)(1)$

$$-59166.86\sin 60°(2) = -4000(3)(1)$$

$$M = 51240\text{ N}\cdot\text{m} = 51.2\text{ kN}\cdot\text{m} \qquad \textbf{Ans.}$$

$\overset{+}{\rightarrow} \Sigma F_x = m(a_G)_x;\qquad 59166.86\cos 60° + N = 0$

$$N = -29583.43\text{ N} = -29.6\text{ kN} \qquad \textbf{Ans.}$$

$+\uparrow \Sigma F_y = m(a_G)_y;\qquad 59166.86\sin 60° - 4000(9.81) - V = 4000(3)$

$$V = 0 \qquad \textbf{Ans.}$$

© 2010 Pearson Education, Inc., Upper Saddle River, NJ. All rights reserved. This material is protected under all copyright laws as they currently exist. No portion of this material may be reproduced, in any form or by any means, without permission in writing from the publisher.

R2–38. Each gear has a mass of 2 kg and a radius of gyration about its pinned mass centers A and B of $k_g = 40$ mm. Each link has a mass of 2 kg and a radius of gyration about its pinned ends A and B of $k_l = 50$ mm. If originally the spring is unstretched when the couple moment $M = 20\ \text{N}\cdot\text{m}$ is applied to link AC, determine the angular velocities of the links at the instant link AC rotates $\theta = 45°$. Each gear and link is connected together and rotates in the horizontal plane about the fixed pins A and B.

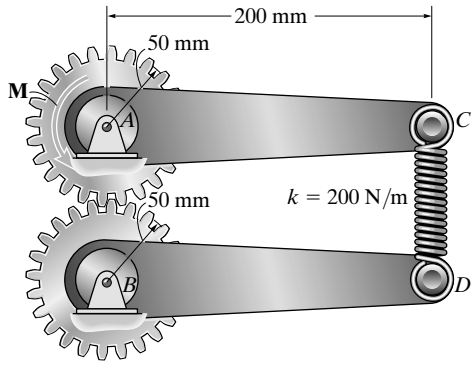

Consider the system of both gears and the links.

The spring stretches $s = 2(0.2 \sin 45°) = 0.2828$ m.

$$T_1 + \Sigma U_{1-2} = T_2$$

$$0 + \left\{20\left(\frac{\pi}{4}\right) - \frac{1}{2}(200)(0.2828)^2\right\} = 2\left\{\frac{1}{2}\left[(2)(0.05)^2 + (2)(0.04)^2\right]\omega^2\right\}$$

$$\omega = 30.7\ \text{rad/s} \qquad \textbf{Ans.}$$

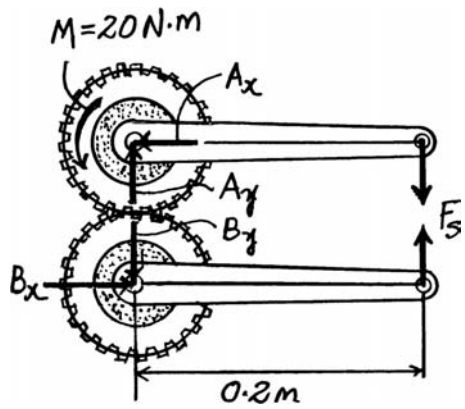

Note that work is done by the tangential force between the gears since each move. For the system, though, this force is equal but opposite and the work cancels.

R2–39. The 5-lb rod AB supports the 3-lb disk at its end A. If the disk is given an angular velocity $\omega_D = 8$ rad/s while the rod is held stationary and then released, determine the angular velocity of the rod after the disk has stopped spinning relative to the rod due to frictional resistance at the bearing A. Motion is in the *horizontal plane.* Neglect friction at the fixed bearing B.

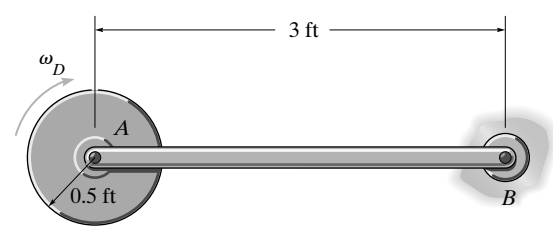

Conservation of Momentum:

$$\circlearrowright + \Sigma(H_B)_1 = \Sigma(H_B)_2$$

$$\left[\frac{1}{2}\left(\frac{3}{32.2}\right)(0.5)^2\right](8) + 0 = \left[\frac{1}{3}\left(\frac{5}{32.2}\right)(3)^2\right]\omega$$

$$+\left[\frac{1}{2}\left(\frac{3}{32.2}\right)(0.5)^2\right]\omega + \left(\frac{3}{32.2}\right)(3\omega)(3)$$

$$\omega = 0.0708\ \text{rad/s} \qquad \textbf{Ans.}$$

© 2010 Pearson Education, Inc., Upper Saddle River, NJ. All rights reserved. This material is protected under all copyright laws as they currently exist. No portion of this material may be reproduced, in any form or by any means, without permission in writing from the publisher.

***R2–40.** A cord is wrapped around the rim of each 10-lb disk. If disk B is released from rest, determine the angular velocity of disk A in 2 s. Neglect the mass of the cord.

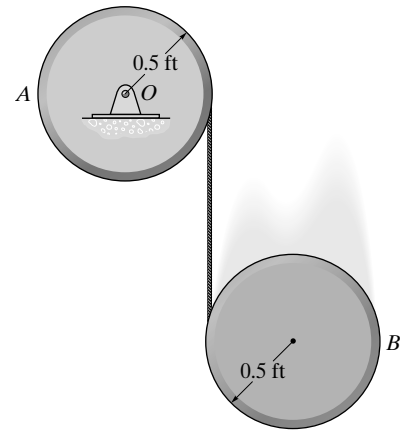

Principle of Impulse and Momentum: The mass moment inertia of disk A about point O is $I_O = \frac{1}{2}\left(\frac{10}{32.2}\right)(0.5^2) = 0.03882 \text{ slug}\cdot\text{ft}^2$. Applying Eq. 19–14 to disk A [FBD(a)], we have

$$I_O\,\omega_1 + \Sigma\int_{t_1}^{t_2} M_O\,dt = I_O\,\omega_2$$

$$(\circlearrowleft +) \qquad 0 - [T(2)](0.5) = -0.03882\omega_A \qquad \textbf{(1)}$$

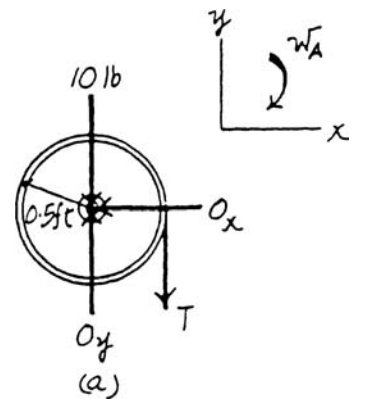

The mass moment inertia of disk B about its mass center is $I_G = \frac{1}{2}\left(\frac{10}{32.2}\right)(0.5^2) = 0.03882 \text{ slug}\cdot\text{ft}^2$. Applying Eq. 19–14 to disk B [FBD(b)], we have

$$m(v_{G_y})_1 + \Sigma\int_{t_1}^{t_2} F_y\,dt = m(v_{G_y})_1$$

$$(+\uparrow) \qquad 0 + T(2) - 10(2) = -\left(\frac{10}{32.2}\right)v_G \qquad \textbf{(2)}$$

$$I_G\,\omega_1 + \Sigma\int_{t_1}^{t_2} M_G\,dt = I_G\,\omega_2$$

$$(\circlearrowleft +) \qquad 0 - [T(2)](0.5) = -0.03882\omega_B \qquad \textbf{(3)}$$

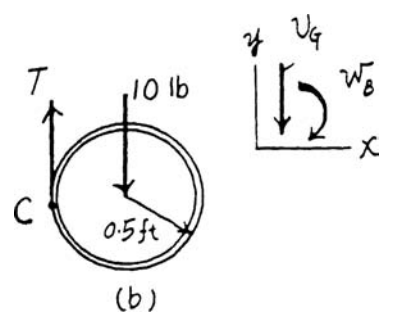

Kinematics: The speed of point C on disk B is $v_C = \omega_A r_A = 0.5\omega_A$. Here, $v_{C/G} = \omega_B r_{C/G} = 0.5\omega_B$ which is directed vertically upward. Applying Eq. 16–15, we have

$$\mathbf{v}_C = \mathbf{v}_G + \mathbf{v}_{C/G}$$

$$\begin{bmatrix} 0.5\omega_A \\ \downarrow \end{bmatrix} = \begin{bmatrix} v_G \\ \downarrow \end{bmatrix} + \begin{bmatrix} 0.5\omega_B \\ \uparrow \end{bmatrix}$$

$$(+\uparrow) \qquad -0.5\omega_A = -v_G + 0.5\omega_B \qquad \textbf{(4)}$$

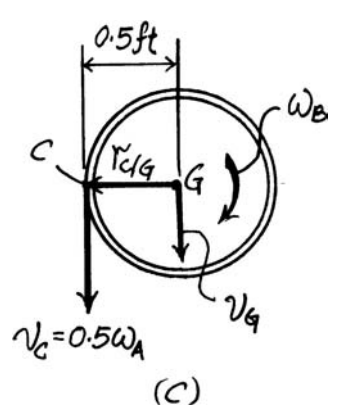

Solving Eqs. (1), (2), (3), and (4) yields:

$$\omega_A = 51.5 \text{ rad/s} \qquad \textbf{Ans.}$$

$$\omega_B = 51.52 \text{ rad/s} \qquad v_G = 51.52 \text{ ft/s} \qquad T = 2.00 \text{ lb}$$

© 2010 Pearson Education, Inc., Upper Saddle River, NJ. All rights reserved. This material is protected under all copyright laws as they currently exist. No portion of this material may be reproduced, in any form or by any means, without permission in writing from the publisher.

R2–41. A cord is wrapped around the rim of each 10-lb disk. If disk B is released from rest, determine how much time t is required before A attains an angular velocity $\omega_A = 5$ rad/s.

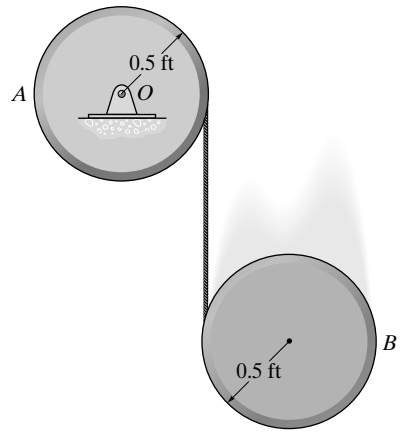

Principle of Impulse and Momentum: The mass moment inertia of disk A about point O is $I_O = \frac{1}{2}\left(\frac{10}{32.2}\right)\left(0.5^2\right) = 0.03882\ \text{slug}\cdot\text{ft}^2$. Applying Eq. 19–14 to disk A [FBD(a)], we have

$$I_O\,\omega_1 + \Sigma\int_{t_1}^{t_2} M_O\,dt = I_O\,\omega_2$$

$$(+) \qquad 0 - [T(t)](0.5) = -0.03882(5) \qquad \textbf{(1)}$$

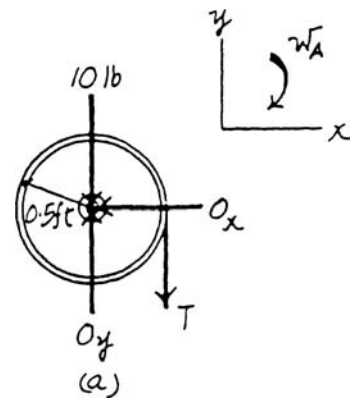

The mass moment inertia of disk B about its mass center is $I_G = \frac{1}{2}\left(\frac{10}{32.2}\right)\left(0.5^2\right) = 0.03882\ \text{slug}\cdot\text{ft}^2$. Applying Eq. 19–14 to disk B [FBD(b)], we have

$$m\left(v_{G_y}\right)_1 + \Sigma\int_{t_1}^{t_2} F_y\,dt = m\left(v_{G_y}\right)_1$$

$$(+\uparrow) \qquad 0 + T(t) - 10(t) = -\left(\frac{10}{32.2}\right)v_G \qquad \textbf{(2)}$$

$$I_G\omega_1 + \Sigma\int_{t_1}^{t_2} M_G\,dt = I_G\,\omega_2$$

$$(\circlearrowleft +) \qquad 0 - [T(t)](0.5) = -0.03882\omega_B \qquad \textbf{(3)}$$

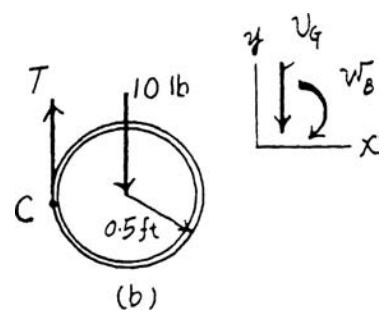

Kinematics: The speed of point C on disk B is $v_C = \omega_A\,r_A = 0.5(5) = 2.50$ ft/s. Here, $v_{C/G} = \omega_B\,r_{C/G} = 0.5\,\omega_B$ which is directed vertically upward. Applying Eq. 16–15, we have

$$\mathbf{v}_C = \mathbf{v}_G + \mathbf{v}_{C/G}$$

$$\begin{bmatrix} 2.50 \\ \downarrow \end{bmatrix} = \begin{bmatrix} v_G \\ \downarrow \end{bmatrix} + \begin{bmatrix} 0.5\,\omega_B \\ \uparrow \end{bmatrix}$$

$$(+\uparrow) \qquad -2.50 = -v_G + 0.5\,\omega_B \qquad \textbf{[4]}$$

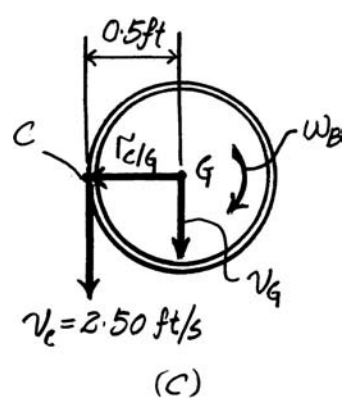

Solving Eqs. (1), (2), (3), and (4) yields:

$$t = 0.194\ \text{s} \qquad \textbf{Ans.}$$

$$\omega_B = 5.00\ \text{rad/s} \qquad v_G = 5.00\ \text{ft/s} \qquad T = 2.00\ \text{lb}$$

© 2010 Pearson Education, Inc., Upper Saddle River, NJ. All rights reserved. This material is protected under all copyright laws as they currently exist. No portion of this material may be reproduced, in any form or by any means, without permission in writing from the publisher.

R2–42. The 15-kg disk is pinned at O and is initially at rest. If a 10-g bullet is fired into the disk with a velocity of 200 m/s, as shown, determine the maximum angle θ to which the disk swings. The bullet becomes embedded in the disk.

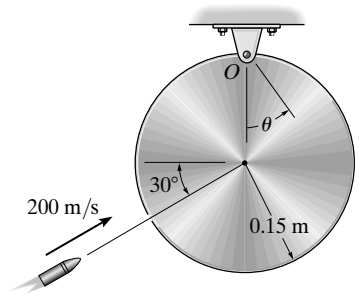

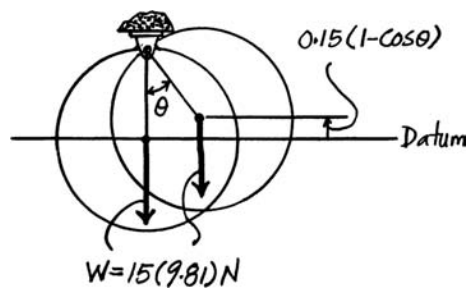

$\circlearrowleft + (H_O)_1 = (H_O)_2$

$$0.01(200 \cos 30°)(0.15) = \left[\left[\frac{1}{2}(15)(0.15)^2 + 15(0.15)^2\right]\omega\right.$$

$$\omega = 0.5132 \text{ rad/s}$$

$$T_1 + V_1 = T_2 + V_2$$

$$\frac{1}{2}\left[\frac{1}{2}(15)(0.15)^2 + 15(0.15)^2\right](0.5132)^2 + 0 = 0 + 15(9.81)(0.15)(1 - \cos\theta)$$

$$\theta = 4.45° \qquad \textbf{Ans.}$$

Note that the calculation neglects the small mass of the bullet after it becomes embedded in the plate, since its position in the plate is not specified.

© 2010 Pearson Education, Inc., Upper Saddle River, NJ. All rights reserved. This material is protected under all copyright laws as they currently exist. No portion of this material may be reproduced, in any form or by any means, without permission in writing from the publisher.

R2–43. The disk rotates at a constant rate of 4 rad/s as it falls freely so that its center G has an acceleration of 32.2 ft/s^2. Determine the accelerations of points A and B on the rim of the disk at the instant shown.

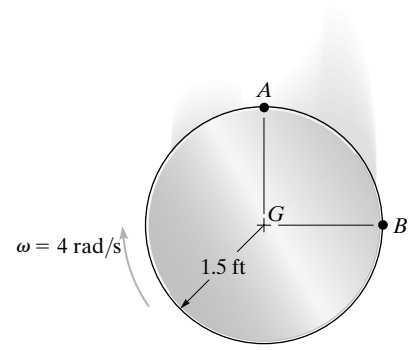

$$\mathbf{a}_A = \mathbf{a}_G + (\mathbf{a}_{A/G})_t + (\mathbf{a}_{A/G})_n$$

$$\left[\underset{\rightarrow}{(a_A)_x}\right] + \left[\underset{\uparrow}{(a_A)_y}\right] = \left[\underset{\downarrow}{32.2}\right] + 0 + \left[\underset{\downarrow}{(4)^2(1.5)}\right]$$

$(\overset{+}{\rightarrow})$ $\quad (a_A)_x = 0$

$(+\uparrow)$ $\quad (a_A)_y = -32.2 - (4)^2(1.5) = -56.2 \text{ ft/s}^2 = 56.2 \text{ ft/s}^2 \downarrow$

$a_A = (a_A)_y = 56.2 \text{ ft/s}^2 \downarrow$ **Ans.**

$$\mathbf{a}_B = \mathbf{a}_G + (\mathbf{a}_{B/G})_t + (\mathbf{a}_{B/G})_n$$

$$\left[\underset{\rightarrow}{(a_B)_x}\right] + \left[\underset{\uparrow}{(a_B)_y}\right] = \left[\underset{\downarrow}{32.2}\right] + 0 + \left[\underset{\leftarrow}{(4)^2(1.5)}\right]$$

$(\overset{+}{\rightarrow})$ $\quad (a_B)_x = -(4)^2(1.5) = -24 \text{ ft/s}^2 = 24 \text{ ft/s}^2 \leftarrow$

$(+\uparrow)$ $\quad (a_B)_y = -32.2 \text{ ft/s}^2 = 32.2 \text{ ft/s}^2 \downarrow$

$a_B = \sqrt{(a_B)_x^2 + (a_B)_y^2} = \sqrt{24^2 + 32.2^2} = 40.2 \text{ ft/s}^2$ **Ans.**

$\theta = \tan^{-1}\left(\dfrac{(a_B)_y}{(a_B)_x}\right) = \tan^{-1}\left(\dfrac{32.2}{24}\right) = 53.3°$ ◸ **Ans.**

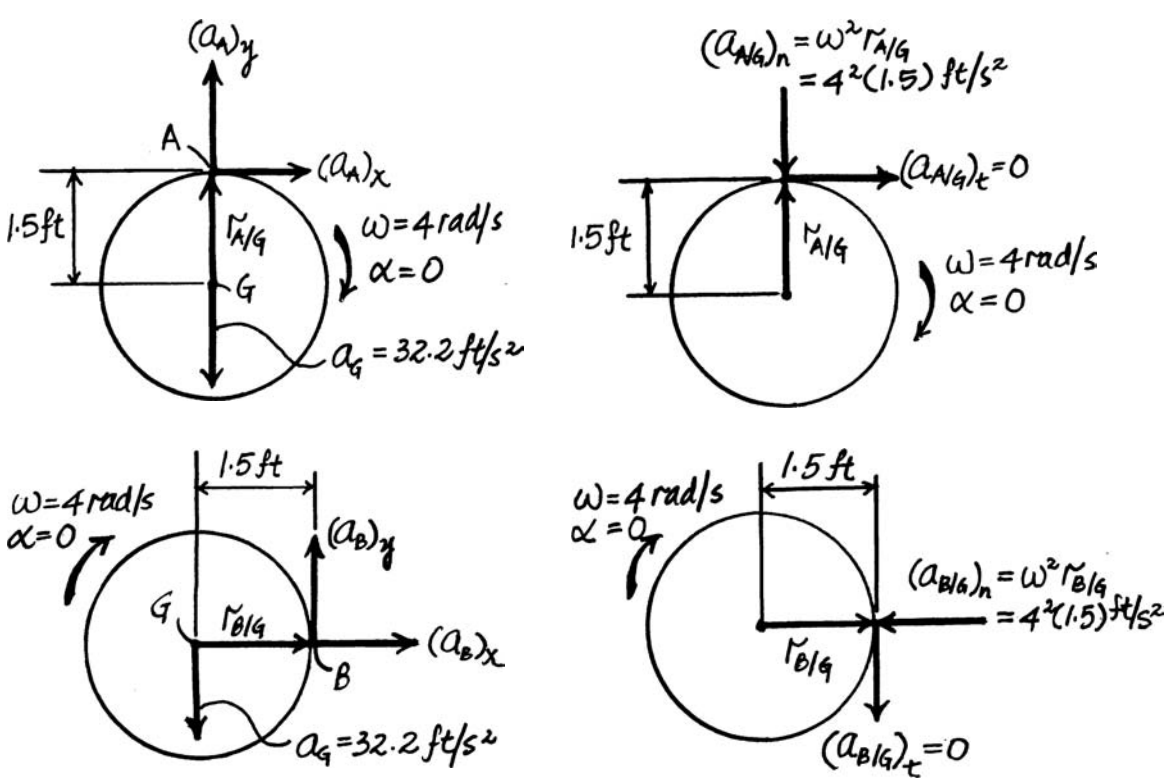

© 2010 Pearson Education, Inc., Upper Saddle River, NJ. All rights reserved. This material is protected under all copyright laws as they currently exist. No portion of this material may be reproduced, in any form or by any means, without permission in writing from the publisher.

***R2–44.** The operation of "reverse" for a three-speed automotive transmission is illustrated schematically in the figure. If the shaft G is turning with an angular velocity of $\omega_G = 60$ rad/s, determine the angular velocity of the drive shaft H. Each of the gears rotates about a fixed axis. Note that gears A and B, C and D, E and F are in mesh. The radius of each of these gears is reported in the figure.

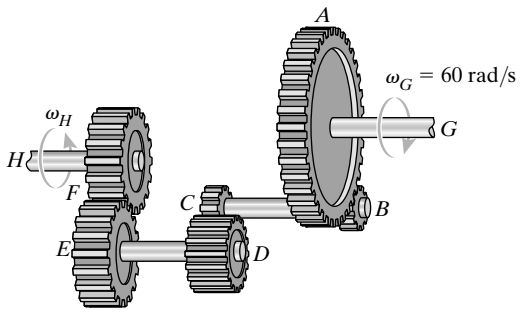

$r_A = 90$ mm
$r_B = r_C = 30$ mm
$r_D = 50$ mm
$r_E = 70$ mm
$r_F = 60$ mm

$$\omega_C = \omega_B = \frac{r_A}{r_B}\omega_G = \frac{90}{30}(60) = 180 \text{ rad/s}$$

$$\omega_E = \omega_D = \frac{r_C}{r_D}\omega_C = \frac{30}{50}(180) = 108 \text{ rad/s}$$

$$\omega_H = \frac{r_E}{r_F}\omega_E = \frac{70}{60}(108) = 126 \text{ rad/s}$$ **Ans.**

R2–45. Shown is the internal gearing of a "spinner" used for drilling wells. With constant angular acceleration, the motor M rotates the shaft S to 100 rev/min in $t = 2$ s starting from rest. Determine the angular acceleration of the drill-pipe connection D and the number of revolutions it makes during the 2-s startup.

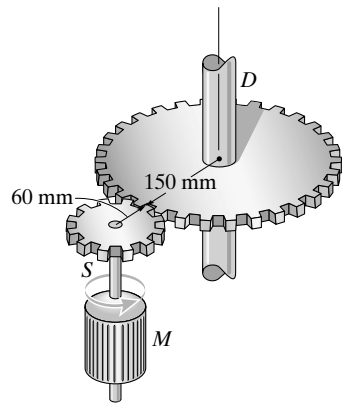

For shaft S,

$$\omega = \omega_0 + \alpha_c t$$

$$\frac{100(2\pi)}{60} = 0 + \alpha_S(2) \qquad \alpha_S = 5.236 \text{ rad/s}^2$$

$$\theta = \theta_0 + \omega_0 t + \frac{1}{2}\alpha_c t^2$$

$$\theta_S = 0 + 0 + \frac{1}{2}(5.236)(2)^2 = 10.472 \text{ rad}$$

For connection D,

$$\alpha_D = \frac{r_S}{r_D}\alpha_S = \frac{60}{150}(5.236) = 2.09 \text{ rad/s}^2$$ **Ans.**

$$\theta_D = \frac{r_S}{r_D}\theta_S = \frac{60}{150}(10.472) = 4.19 \text{ rad} = 0.667 \text{ rev}$$ **Ans.**

© 2010 Pearson Education, Inc., Upper Saddle River, NJ. All rights reserved. This material is protected under all copyright laws as they currently exist. No portion of this material may be reproduced, in any form or by any means, without permission in writing from the publisher.

R2–46. Gear A has a mass of 0.5 kg and a radius of gyration of $k_A = 40$ mm, and gear B has a mass of 0.8 kg and a radius of gyration of $k_B = 55$ mm. The link is pinned at C and has a mass of 0.35 kg. If the link can be treated as a slender rod, determine the angular velocity of the link after the assembly is released from rest when $\theta = 0°$ and falls to $\theta = 90°$.

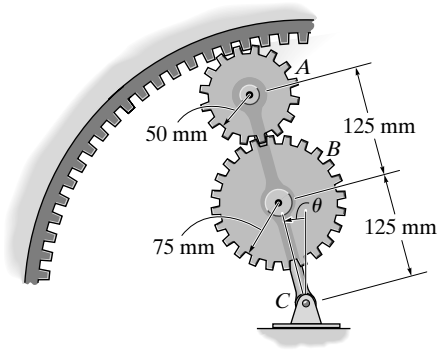

Kinematics: The velocity of the mass center of gear A is $v_D = 0.25\,\omega_{CD}$, and since is rolls without slipping on the fixed circular gear track, the location of the instantaneous center of zero velocity is as shown. Thus,

$$\omega_A = \frac{v_D}{r_{D/IC}} = \frac{0.25\,\omega_{CD}}{0.05} = 5\omega_{CD} \qquad v_E = \omega_A\, r_{E/IC} = 5\omega_{CD}\,(0.1) = 0.5\,\omega_{CD}$$

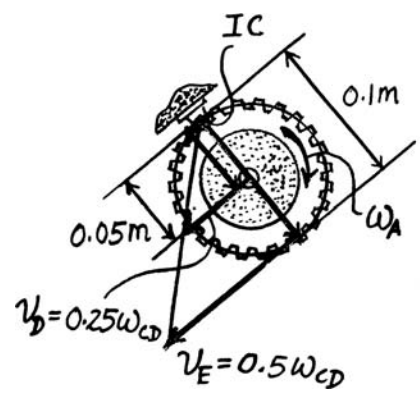

The velocity of the mass center of gear B is $v_F = 0.125\omega_{CD}$. The location of the instantaneous center of zero velocity is as shown. Thus,

$$\omega_B = \frac{v_E}{r_{E/(IC)1}} = \frac{0.5\,\omega_{CD}}{0.1} = 5\omega_{CD}$$

Potential Energy: Datum is set at point C. When gears A, B and link AC are at their initial position ($\theta = 0°$), their centers of gravity are located 0.25 m, 0.125 m, and 0.125 m *above* the datum, respectively. The total gravitational potential energy when they are at these positions is $0.5(9.81)(0.25) + 0.8(9.81)(0.125) + 0.35(9.81)(0.125) = 2.636\ \text{N}\cdot\text{m}$. Thus, the initial and final potential energy is

$$V_1 = 2.636\ \text{N}\cdot\text{m} \qquad V_2 = 0$$

Kinetic Energy: The mass moment of inertia of gears A and B about their mass center is $I_D = 0.5\left(0.04^2\right) = 0.8\left(10^{-3}\right)\ \text{kg}\cdot\text{m}^2$ and $I_F = 0.8\left(0.055^2\right) = 2.42\left(10^{-3}\right)\ \text{kg}\cdot\text{m}^2$. The mass moment of inertia of link CD about point C is $(I_{CD})_C = \frac{1}{12}(0.35)\left(0.25^2\right) + 0.35\left(0.125^2\right) = 7.292\left(10^{-3}\right)\ \text{kg}\cdot\text{m}^2$. Since the system is at rest initially, the initial kinetic energy is $T_1 = 0$. The final kinetic energy is given by

$$T_2 = \frac{1}{2}m_A v_D^2 + \frac{1}{2}I_D\,\omega_A^2 + \frac{1}{2}m_B\,v_F^2 + \frac{1}{2}I_F\omega_B^2 + \frac{1}{2}(I_{CD})_C\,\omega_{CD}^2$$

$$= \frac{1}{2}(0.5)(0.25\,\omega_{CD})^2 + \frac{1}{2}\left[0.8\left(10^{-3}\right)\right](5\omega_{CD})^2 + \frac{1}{2}(0.8)(0.125\,\omega_{CD})^2$$

$$+ \frac{1}{2}\left[2.42\left(10^{-3}\right)\right](5\,\omega_{CD})^2 + \frac{1}{2}\left[7.292\left(10^{-3}\right)\right]\left(\omega_{CD}^2\right)$$

$$= 0.06577\,\omega_{CD}^2$$

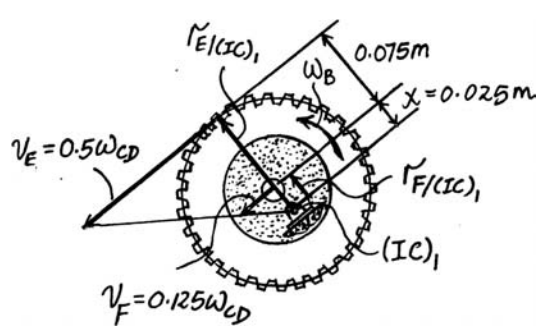

Conservation of Energy: Applying Eq. 18–19, we have

$$T_1 + V_1 = T_2 + V_2$$

$$0 + 2.636 = 0.06577\,\omega_{CD}^2$$

$$\omega_{CD} = 6.33\ \text{rad/s} \qquad \textbf{Ans.}$$

© 2010 Pearson Education, Inc., Upper Saddle River, NJ. All rights reserved. This material is protected under all copyright laws as they currently exist. No portion of this material may be reproduced, in any form or by any means, without permission in writing from the publisher.

R2–47. The 15-kg cylinder rotates with an angular velocity of $\omega = 40$ rad/s. If a force $F = 6$ N is applied to bar AB, as shown, determine the time needed to stop the rotation. The coefficient of kinetic friction between AB and the cylinder is $\mu_k = 0.4$. Neglect the thickness of the bar.

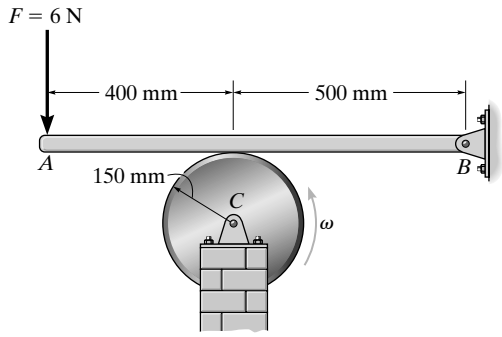

For link AB,

$$\circlearrowleft + \Sigma M_B = 0; \qquad 6(0.9) - N_E(0.5) = 0 \qquad N_E = 10.8 \text{ N}$$

$$I_C = \frac{1}{2}mr^2 = \frac{1}{2}(15)(0.15)^2 = 0.16875 \text{ kg}\cdot\text{m}^2$$

$$\circlearrowleft + \Sigma M_C = I_C\,\alpha; \qquad -0.4(10.8)(0.15) = 0.16875(\alpha) \qquad \alpha = -3.84 \text{ rad/s}^2$$

$$\circlearrowleft + \omega = \omega_0 + \alpha t$$

$$0 = 40 + (-3.84)\,t$$

$$t = 10.4 \text{ s} \qquad \textbf{Ans.}$$

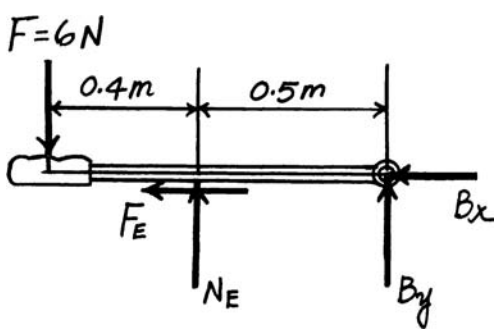

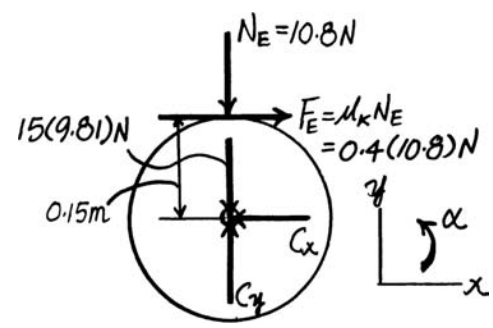

***R2–48.** If link AB rotates at $\omega_{AB} = 6$ rad/s, determine the angular velocities of links BC and CD at the instant shown.

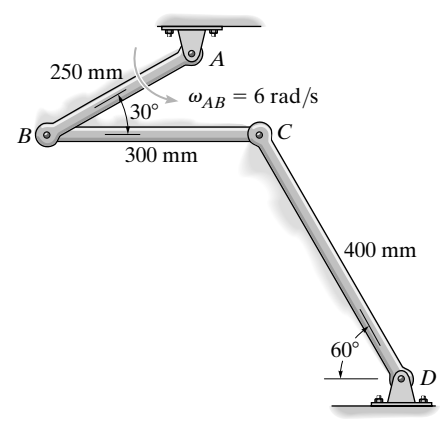

Link AB rotates about the fixed point A. Hence,

$$v_B = \omega_{AB}\,r_{AB} = 6(0.25) = 1.5 \text{ m/s}$$

For link BC,

$$r_{B/IC} = 0.3\cos 30° = 0.2598 \text{ m} \qquad r_{C/IC} = 0.3\cos 60° = 0.15 \text{ m}$$

$$\omega_{BC} = \frac{v_B}{r_{B/IC}} = \frac{1.5}{0.2598} = 5.77 \text{ rad/s} \qquad \textbf{Ans.}$$

$$v_C = \omega_{BC}\,r_{C/IC} = 5.77(0.15) = 0.8660 \text{ m/s}$$

Link CD rotates about the fixed point D. Hence,

$$v_C = \omega_{CD}\,r_{CD}$$

$$0.8660 = \omega_{CD}\,(0.4) \qquad \omega_{CD} = 2.17 \text{ rad/s} \qquad \textbf{Ans.}$$

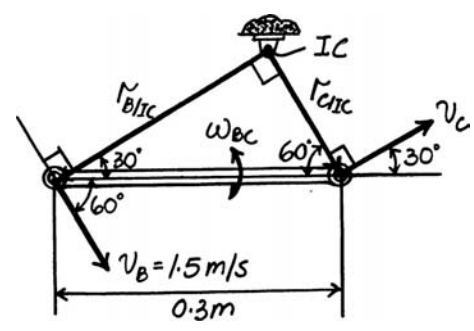

© 2010 Pearson Education, Inc., Upper Saddle River, NJ. All rights reserved. This material is protected under all copyright laws as they currently exist. No portion of this material may be reproduced, in any form or by any means, without permission in writing from the publisher.

R2–49. If the thin hoop has a weight W and radius r and is thrown onto a *rough surface* with a velocity $\mathbf{v}_G$ parallel to the surface, determine the backspin, $\boldsymbol{\omega}$, it must be given so that it stops spinning at the same instant that its forward velocity is zero. It is not necessary to know the coefficient of kinetic friction at A for the calculation.

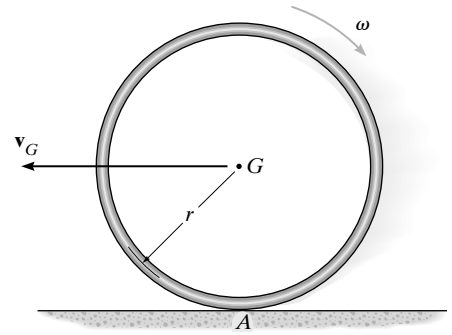

Equations of Motion: The mass moment of inertia of the hoop about its mass center is given by $I_G = mr^2 = \frac{W}{g}r^2$. Applying Eq. 17–16, we have

$$+\uparrow \Sigma F_y = m(a_G)_y; \qquad N - W = 0 \qquad N = W$$

$$\overset{+}{\rightarrow} \Sigma F_x = m(a_G)_x; \qquad \mu W = \frac{W}{g}a_G \qquad a_G = \mu g$$

$$\circlearrowleft + \Sigma M_G = I_G\alpha; \qquad \mu W r = \frac{W}{g}r^2\alpha \qquad \alpha = \frac{\mu g}{r}$$

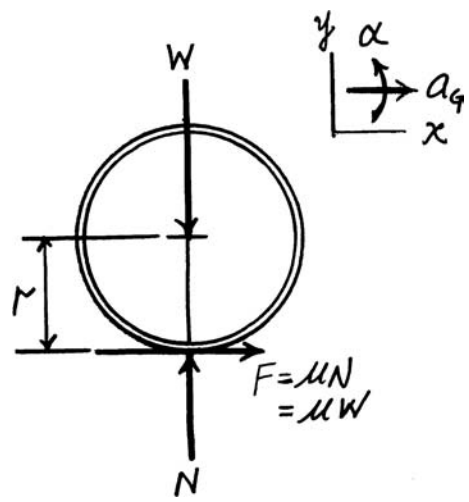

Kinematics: The time required for the hoop to stop back spinning can be determined by applying Eq. 16–5.

$$\omega = \omega_0 + \alpha t_1$$

$$(\circlearrowleft +) \qquad 0 = \omega + \left(-\frac{\mu g}{r}\right)t_1$$

$$t_1 = \frac{\omega r}{\mu g}$$

The time required for the hoop to stop can be determined by applying Eq. 12–4.

$$(\overset{+}{\leftarrow}) \qquad v = v_0 + at_2$$

$$0 = v_G + (-\mu g)t_2$$

$$t_2 = \frac{v_G}{\mu g}$$

It is required that $t_1 = t_2$. Thus,

$$\frac{\omega r}{\mu g} = \frac{v_G}{\mu g}$$

$$\omega = \frac{v_G}{r} \qquad \textbf{Ans.}$$

© 2010 Pearson Education, Inc., Upper Saddle River, NJ. All rights reserved. This material is protected under all copyright laws as they currently exist. No portion of this material may be reproduced, in any form or by any means, without permission in writing from the publisher.

R2–50. The wheel has a mass of 50 kg and a radius of gyration $k_G = 0.4$ m. If it rolls without slipping down the inclined plank, determine the horizontal and vertical components of reaction at A, and the normal reaction at the smooth support B at the instant the wheel is located at the midpoint of the plank. The plank has negligible thickness and has a mass of 20 kg.

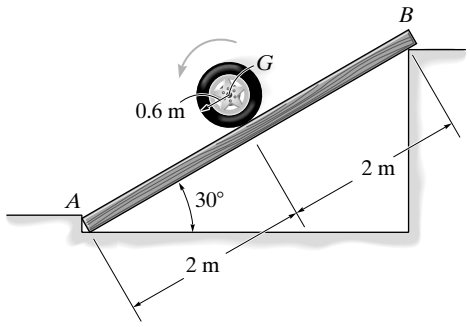

Equations of Motion: Since the tire rolls down the plane without slipping, then $a_G = \alpha r = 0.6\alpha$. The mass moment of inertia of the tire about its mass center is given by $I_G = mk_G^2 = 50(0.4^2) = 8.00\ \text{kg}\cdot\text{m}^2$. Applying Eq. 17–16 to [FBD(a)], we have

$\nwarrow + \Sigma F_{y'} = m(a_G)_{y'}$; $\quad N - 50(9.81)\cos 30° = 0 \quad$ N = 424.79 N

$\swarrow + \Sigma F_{x'} = m(a_G)_{x'}$; $\quad 50(9.81)\sin 30° - Ff = 50(0.6\alpha)$ **(1)**

$\circlearrowleft + \Sigma M_G = I_G\alpha$; $\quad F_f(0.6) = 8.00\alpha$ **(2)**

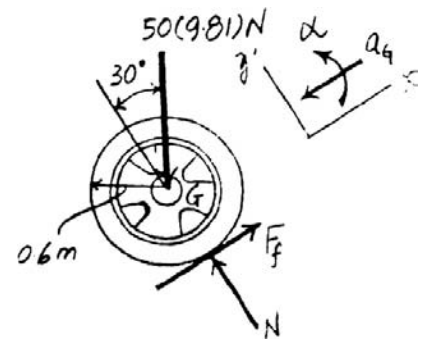

Solving Eqs. [1] and [2] yields

$$F_f = 75.46\ \text{N} \qquad \alpha = 5.660\ \text{rad/s}^2$$

Equations of Equilibrium: From FBD(b).

$\circlearrowleft + \Sigma M_A = 0$; $\quad N_B(4) - 20(9.81)\cos 30°(2) - 424.79(2) = 0$

$$N_B = 297.35\ \text{N} = 297\ \text{N} \qquad \textbf{Ans.}$$

$+\uparrow \Sigma F_y = 0$; $\quad A_y + 297.35\cos 30° - 20(9.81)$

$$- 424.79\cos 30° - 75.46\sin 30° = 0$$

$$A_y = 344\ \text{N} \qquad \textbf{Ans.}$$

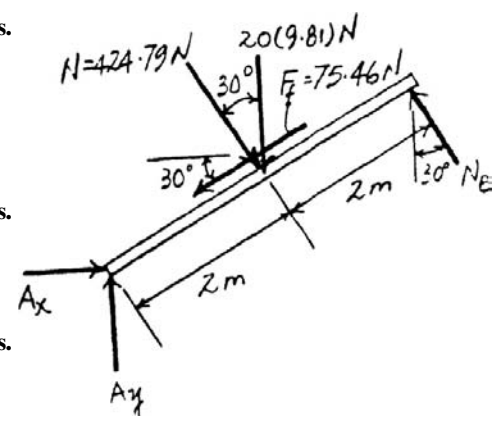

$\xrightarrow{+} \Sigma F_x = 0$; $\quad A_x + 424.79\sin 30° - 75.46\cos 30° - 297.35\sin 30° = 0$

$$A_x = 1.63\ \text{N} \qquad \textbf{Ans.}$$