2
Lumped-parameter Models

2.1 INTRODUCTION

Many physical systems cannot be modeled successfully by the single-degree-of-freedom model discussed in Chapter 1. That is, to describe the motion of the structure or machine, several coordinates may be required. Such systems are referred to as *lumped-parameter systems* to distinguish them from the distributed-parameter systems considered in Chapters 9 through 12. Such systems are also called *lumped-mass systems* and sometimes *discrete systems* (referring to mass not time). Each lumped mass potentially corresponds to six degrees of freedom. Such systems are referred to as multiple-degree-of-freedom systems (often abbreviated MDOF). In order to keep a record of each coordinate of the system, vectors are used. This is done both for ease of notation and to enable vibration theory to take advantage of the power of linear algebra. This section organizes the notation to be used throughout the rest of the text and introduces several common examples.

Before the motions of such systems are considered, it is important to recall the definition of a matrix and a vector as well as a few simple properties of each. Vectors were used in Sections 1.9 and 1.10, and are formalized here. If you are familiar with vector algebra, skip ahead to Equation (2.7). Let $\mathbf{q}$ denote a vector of dimension n defined by

$$\mathbf{q} = \begin{bmatrix} q_1 \\ q_2 \\ \vdots \\ q_n \end{bmatrix} \tag{2.1}$$

Here, q_i denotes the ith element of vector $\mathbf{q}$. This is not to be confused with $\mathbf{q}_i$, which denotes the ith vector in a set of vectors. Two vectors $\mathbf{q}$ and $\mathbf{r}$ of the same dimension (n in this case) may be summed under the rule

$$\mathbf{q} + \mathbf{r} = \mathbf{s} = \begin{bmatrix} q_1 + r_1 \\ q_2 + r_2 \\ \vdots \\ q_n + r_n \end{bmatrix} \tag{2.2}$$

Vibration with Control D. J. Inman
© 2006 John Wiley & Sons, Ltd. ISBN: 0-470-01051-7

and multiplied under the rule (dot product or inner product)

$$\mathbf{q} \cdot \mathbf{r} = \sum_{i=1}^{n} q_i r_i = \mathbf{q}^T \mathbf{r} \tag{2.3}$$

where the superscript T denotes the transpose of the vector. Note that the inner product of two vectors, $\mathbf{q}^T\mathbf{q}$, yields a scalar. With $\mathbf{q}$ given in Equation (2.1) as a column vector, $\mathbf{q}^T$ is a row vector given by $\mathbf{q}^T = [q_1 \; q_2 \cdots q_n]$.

The product of a scalar, a, and a vector, $\mathbf{q}$, is given by

$$a\mathbf{q} = [aq_1 \quad aq_2 \quad \cdots \quad aq_n]^T \tag{2.4}$$

If the zero vector is defined as a vector of proper dimension whose entries are all zero, then rules (2.2) and (2.4) define a linear vector space (see Appendix B) of dimension n.

A matrix, A, is defined as a rectangular array of numbers (scalars) of the form

$$A = \begin{bmatrix} a_{11} & a_{12} & \cdots & a_{1n} \\ a_{21} & a_{22} & \cdots & a_{2n} \\ \vdots & \vdots & & \vdots \\ a_{m1} & a_{m2} & \cdots & a_{mn} \end{bmatrix}$$

consisting of m rows and n columns. Matrix A is said to have the dimensions $m \times n$. For the most part, the equations of motion used in vibration theory result in real-valued square matrices of dimensions $n \times n$. Each of the individual elements of a matrix are labeled as a_{ik}, which denotes the element of the matrix in the position of the intersection of the ith row and kth column.

Two matrices of the same dimensions can be summed by adding the corresponding elements in each position, as illustrated by a 2×2 example:

$$\begin{bmatrix} a_{11} & a_{12} \\ a_{21} & a_{22} \end{bmatrix} + \begin{bmatrix} b_{11} & b_{12} \\ b_{21} & b_{22} \end{bmatrix} = \begin{bmatrix} a_{11} + b_{11} & a_{12} + b_{12} \\ a_{21} + b_{21} & a_{22} + b_{22} \end{bmatrix} \tag{2.5}$$

The product of two matrices is slightly more complicated and is given by the formula $C = AB$, where the resulting matrix C has elements given by

$$c_{ij} = \sum_{k=1}^{n} a_{ik} b_{kj} \tag{2.6}$$

and is only defined if the number of columns of A is the same as the number of rows of B, which is n in Equation (2.6). Note that the product BA is not defined for this case unless A and B are of the same dimensions. In most cases, the product of two square matrices or the product of a square matrix and a vector are used in vibration analysis. Note that a vector is just a rectangular matrix with the smallest dimension being 1.

With this introduction, the equations of motion for lumped-parameter systems can be discussed. These equations can be derived by several techniques, such as Newton's laws and Lagrange's equations (Goldstein, 2002), linear graph methods (Rosenberg and Karnopp, 1983, or Shearer, Murphy, and Richardson, 1967), or finite element methods (Hughes, 2000).

These analytical models can be further refined by comparison with experimental data (Friswell and Mottershead, 1995). Modeling techniques will not be discussed in this text, since the orientation is analysis.

All the methods just mentioned yield equations that can be put in the following form:

$$A_1\ddot{\mathbf{q}} + A_2\dot{\mathbf{q}} + A_3\mathbf{q} = \mathbf{f}(t) \tag{2.7}$$

which is a vector differential equation with matrix coefficients. Here, $\mathbf{q} = \mathbf{q}(t)$ is an n vector of time-varying elements representing the displacements of the masses in the lumped-mass model. The vectors $\ddot{\mathbf{q}}$ and $\dot{\mathbf{q}}$ represent the accelerations and velocities respectively. The overdot means that each element of $\mathbf{q}$ is differentiated with respect to time. The vector $\mathbf{q}$ could also represent a generalized coordinate that may not be an actual physical coordinate or position but is related, usually in a simple manner, to the physical displacement. The coefficients A_1, A_2, and A_3 are n square matrices of constant real elements representing the various physical parameters of the system. The n vector $\mathbf{f} = \mathbf{f}(t)$ represents applied external forces and is also time varying. The system of Equation (2.7) is also subject to initial conditions on the initial displacement $\mathbf{q}(0) = \mathbf{q}_0$ and initial velocities $\dot{\mathbf{q}}(0) = \dot{\mathbf{q}}_0$.

The matrices A_i will have different properties depending on the physics of the problem under consideration. As will become evident in the remaining chapters, the mathematical properties of these matrices will determine the physical nature of the solution $\mathbf{q}(t)$, just as the properties of the scalars m, c, and k determined the nature of the solution $x(t)$ to the single-degree-of-freedom system of Equation (1.6) in Chapter 1.

In order to understand these properties, there is need to classify square matrices further. The *transpose* of a matrix A, denoted by A^T, is the matrix formed by interchanging the rows of A with the columns of A. A square matrix is said to be *symmetric* if it is equal to its transpose, i.e., $A = A^T$. Otherwise it is said to be *asymmetric*. A square matrix is said to be *skew-symmetric* if it satisfies $A = -A^T$. It is useful to note that any real square matrix may be written as the sum of a symmetric matrix and a skew-symmetric matrix. To see this, notice that the symmetric part of A, denoted by A_s, is given by

$$A_s = \frac{A^T + A}{2} \tag{2.8}$$

and the skew-symmetric part of A, denoted by A_{ss}, is given by

$$A_{ss} = \frac{A - A^T}{2} \tag{2.9}$$

so that $A = A_s + A_{ss}$.

With these definitions in mind, Equation (2.7) can be rewritten as

$$M\ddot{\mathbf{q}} + (D + G)\dot{\mathbf{q}} + (K + H)\mathbf{q} = \mathbf{f} \tag{2.10}$$

where $\mathbf{q}$ and $\mathbf{f}$ are as before but

$M = M^T$ = mass, or inertia, matrix
$D = D^T$ = viscous damping matrix (usually denoted by C)

$G = -G^T$ = gyroscopic matrix
$K = K^T$ = stiffness matrix
$H = -H^T$ = circulatory matrix (constraint damping)

Some physical systems may also have asymmetric mass matrices (see, for instance, Soom and Kim, 1983).

In the following sections, each of these matrix cases will be illustrated by a physical example indicating how such forces may arise. The physical basis for the nomenclature is as expected. The mass matrix arises from the inertial forces in the system, the damping matrix arises from dissipative forces proportional to velocity, and the stiffness matrix arises from elastic forces proportional to displacement. The nature of the skew-symmetric matrices G and H is pointed out by the examples that follow.

Symmetric matrices and the physical systems described by Equation (2.10) can be further characterized by defining the concept of the definiteness of a matrix. A matrix differs from a scalar in many ways. One way in particular is the concept of sign, or ordering. In the previous chapter it was pointed out that the sign of the coefficients in a single-degree-of-freedom system determined the stability of the resulting motion. Similar results will hold for Equation (2.10) when the 'sign of a matrix' is interpreted as the definiteness of a matrix (this is discussed in Chapter (4). The definiteness of an $n \times n$ symmetric matrix is defined by examining the sign of the scalar $\mathbf{x}^T A\,\mathbf{x}$, called the *quadratic* form of A, where $\mathbf{x}$ is an arbitrary n-dimensional real vector. Note that, if $A = I$, the identity matrix consisting of ones along the diagonal and all other elements zero, then

$$\mathbf{x}^T A\mathbf{x} = \mathbf{x}^T I\mathbf{x} = \mathbf{x}^T\mathbf{x} = x_1^2 + x_2^2 + x_3^2 + \cdots + x_n^2$$

which is clearly quadratic.

In particular, the symmetric matrix A is said to be:

- *positive definite* if $\mathbf{x}^T A\mathbf{x} > 0$ for all nonzero real vectors $\mathbf{x}$ and $\mathbf{x}^T A\mathbf{x} = 0$ if and only if $\mathbf{x}$ is zero;
- *positive semidefinite* (or *nonnegative definite*) if $\mathbf{x}^T A\mathbf{x} \geq 0$ for all nonzero real vectors $\mathbf{x}$ (here, $\mathbf{x}^T A\mathbf{x}$ could be zero for some nonzero vector $\mathbf{x}$);
- *indefinite* (or *sign variable*) if $(\mathbf{x}^T A\mathbf{x})(\mathbf{y}^T A\mathbf{y}) < 0$ for some pair of real vectors $\mathbf{x}$ and $\mathbf{y}$.

Definitions of *negative definite* and *negative semidefinite* should be obvious from the first two of the above.

In many cases, M, D, and K will be positive definite, a condtion that ensures stability, as illustrated in Chapter 4, and follows from physical considerations, as it does in the single-degree-of-freedom case.

2.2 CLASSIFICATIONS OF SYSTEMS

This section lists the various classifications of systems modeled by Equation (2.10) that are commonly found in the literature. Each particular engineering application may have a slightly different nomenclature and jargon. The definitions presented here are meant only to simplify discussion in this text and are intended to conform with most other references.

These classifications are useful in verbal communication of the assumptions made when discussing a vibration problem. In the following, each word in italics is defined to imply the assumptions made in modeling the system under consideration.

The phrase *conservative system* usually refers to systems of the form

$$M\ddot{\mathbf{q}}(t) + K\mathbf{q}(t) = \mathbf{f}(t) \tag{2.11}$$

where M and K are both symmetric and positive definite. However, the system

$$M\ddot{\mathbf{q}}(t) + G\dot{\mathbf{q}}(t) + K\mathbf{q}(t) = \mathbf{f}(t) \tag{2.12}$$

(where G is skew-symmetric) is also conservative, in the sense of conserving energy, but is referred to as a *gyroscopic conservative system*, or an *undamped gyroscopic system*. Such systems arise naturally when spinning motions are present, such as in a gyroscope, rotating machine, or spinning satellite.

Systems of the form

$$M\ddot{\mathbf{q}}(t) + D\dot{\mathbf{q}}(t) + K\mathbf{q}(t) = \mathbf{f}(t) \tag{2.13}$$

(where M, D, and K are all positive definite) are referred to as *damped nongyroscopic systems* and are also considered to be damped conservative systems in some instances, although they certainly do not conserve energy. Systems with symmetric and positive definite coefficient matrices are sometimes referred to as *passive* systems.

The classification of systems with asymmetric coefficients is not as straightforward, as the classification depends on more matrix theory than has yet been presented. However, systems of the form

$$M\ddot{\mathbf{q}}(t) + (K + H)\mathbf{q}(t) = \mathbf{f}(t) \tag{2.14}$$

are referred to as *circulatory systems* (Ziegler, 1968). In addition, systems of the more general form

$$M\ddot{\mathbf{q}}(t) + D\dot{\mathbf{q}}(t) + (K + H)\mathbf{q}(t) = \mathbf{f}(t) \tag{2.15}$$

result from dissipation referred to as *constraint damping* as well as external damping in rotating shafts. Combining all of these effects provides motivation to study the most general system of the form of Equation (2.10), i.e.,

$$M\ddot{\mathbf{q}}(t) + (D + G)\dot{\mathbf{q}}(t) + (K + H)\mathbf{q}(t) = \mathbf{f}(t) \tag{2.16}$$

This expression is the most difficult model considered in the first half of the text. To be complete, however, it is appropriate to mention that this model of a structure does not account for time-varying coefficients or nonlinearities, which are sometimes present. Physically, the expression represents the most general forces considered in the majority of linear vibration analysis, with the exception of certain external forces. Mathematically, Equation (2.16) will be further classified in terms of the properties of the coefficient matrices.

2.3 FEEDBACK CONTROL SYSTEMS

The vibrations of many structures and devices are controlled by sophisticated control methods. Examples of the use of feedback control to remove vibrations range from machine tools to tall buildings and large spacecraft. As discussed in Section 1.8, one popular way to control the vibrations of a structure is to measure the position and velocity vectors of the structure and to use that information to drive the system in direct proportion to its positions and velocities. When this is done, Equation (2.16) becomes

$$M\ddot{\mathbf{q}}(t) + (G+D)\dot{\mathbf{q}}(t) + (K+H)\mathbf{q}(t) = -K_p\mathbf{q}(t) - K_v\dot{\mathbf{q}}(t) + \mathbf{f}(t) \tag{2.17}$$

which is the vector version of Equation (1.62). Here, K_p and K_v are called feedback gain matrices.

Obviously, the control system (2.17) can be rewritten in the form of Equation (2.10) by moving the terms $K_p\mathbf{q}$ and $K_v\dot{\mathbf{q}}$ to the left side of system (2.17). Thus, analysis performed on Equation (2.10) will also be useful for studying the vibrations of structures controlled by position and velocity feedback (called *state feedback*).

Control and system theory (see, for instance, Rugh, 1996) are very well developed areas. Most of the work carried out in linear systems has been developed for systems in *state-space* form introduced in Section 1.9 to define equilibrium and in Section 1.10 for numerical integration. The state-space form is

$$\dot{\mathbf{x}}(t) = A\mathbf{x}(t) + B\mathbf{u}(t) \tag{2.18}$$

where $\mathbf{x}$ is called the *state vector*, A is the *state matrix*, and B is the *input matrix*. Here, $\mathbf{u}$ is the applied force, or control, vector. Much software and many theoretical developments exist for systems in the form of Equation (2.18). Equation (2.10) can be written in this form by several very simple transformations. To this end, let $\mathbf{x}_1 = \mathbf{q}$ and $\mathbf{x}_2 = \dot{\mathbf{q}}$; then, Equation (2.16) can be written as the two coupled equations

$$\begin{aligned} \dot{\mathbf{x}}_1(t) &= \mathbf{x}_2(t) \\ M\dot{\mathbf{x}}_2(t) &= -(D+G)\mathbf{x}_2(t) - (K+H)\mathbf{x}_1(t) + \mathbf{f}(t) \end{aligned} \tag{2.19}$$

This form allows the theory of control and systems analysis to be directly applied to vibration problems.

Now suppose there exists a matrix, M^{-1}, called the inverse of M, such that $M^{-1}M = I$, the $n \times n$ identity matrix. Then, Equation (2.19) can be written as

$$\dot{\mathbf{x}}(t) = \begin{bmatrix} 0 & I \\ -M^{-1}(K+H) & -M^{-1}(D+G) \end{bmatrix} \mathbf{x}(t) + \begin{bmatrix} 0 \\ M^{-1} \end{bmatrix} \mathbf{f}(t) \tag{2.20}$$

where the state matrix A is

$$A = \begin{bmatrix} 0 & I \\ -M^{-1}(K+H) & -M^{-1}(D+G) \end{bmatrix}$$

and the input matrix B is

$$B = \begin{bmatrix} 0 \\ M^{-1} \end{bmatrix}$$

and where $\mathbf{x} = \begin{bmatrix} \mathbf{x}_1 & \mathbf{x}_2 \end{bmatrix}^T = \begin{bmatrix} \mathbf{q} & \dot{\mathbf{q}} \end{bmatrix}^T$. This expression has the same form as Equation (2.18). The state-space approach has made a big impact on the development of control theory and, to a lesser but still significant extent, on vibration theory. This state-space representation also forms the approach used for numerical simulation and calculation for vibration analysis.

The matrix inverse M^{-1} can be calculated by a number of different numerical methods readily available in most mathematical software packages along with other factorizations. This is discussed in detail in Appendix B. A simple calculation will show that for second-order matrices of the form

$$M = \begin{bmatrix} a & b \\ c & d \end{bmatrix}$$

the inverse is given by

$$M^{-1} = \frac{1}{\det(M)} \begin{bmatrix} d & -b \\ -c & a \end{bmatrix}$$

where $\det(M) = ad - cb$. This indicates that, if $ad = cb$, then M is called *singular* and M^{-1} does not exist. In general, it should be noted that, if a matrix inverse exists, then it is unique. Furthermore, the inverse of a product of square matrices is given by $(AB)^{-1} = B^{-1}A^{-1}$.

The following selection of examples illustrates the preceding ideas and notations. Additional useful matrix definitions and concepts are presented in the next chapter and as the need arises.

2.4 EXAMPLES

This section lists several examples to illustrate how the various symmetries and asymmetries arise from mechanical devices. No attempt is made here to derive the equations of motion. The derivations may be found in the references listed or in most texts on dynamics. In most cases the equations of motion follow from a simple free body force diagram (Newton's laws).

Example 2.4.1

The first example (Meirovitch, 1980, p. 37) consists of a rotating ring of negligible mass containing an object of mass m that is free to move in the plane of rotation, as indicated in Figure 2.1. In the figure, k_1 and k_2 are both positive spring stiffness values, c is a damping rate (also positive), and Ω is the constant angular velocity of the disc. The linearized equations of motion are

$$\begin{bmatrix} m & 0 \\ 0 & m \end{bmatrix} \ddot{\mathbf{q}} + \left\{ \begin{bmatrix} c & 0 \\ 0 & 0 \end{bmatrix} + 2\, m\Omega \begin{bmatrix} 0 & -1 \\ 1 & 0 \end{bmatrix} \right\} \dot{\mathbf{q}} + \begin{bmatrix} k_1 + k_2 - m\Omega^2 & 0 \\ 0 & 2k_2 - m\Omega^2 \end{bmatrix} \mathbf{q} = \mathbf{0} \quad (2.21)$$

where $\mathbf{q} = [x(t) \quad y(t)]^T$ is the vector of displacements. Here, M, D, and K are symmetric, while G is skew-symmetric, so the system is a damped gyroscopic system.

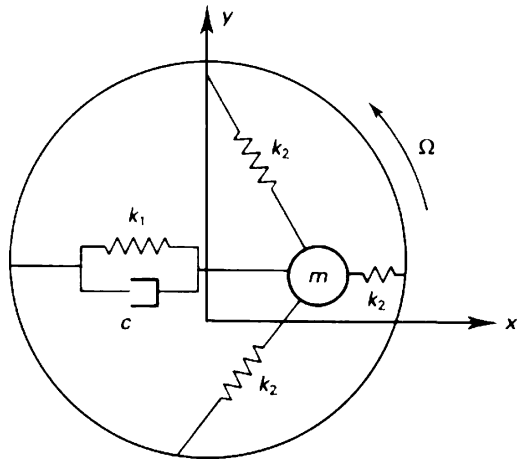

Figure 2.1 Schematic of a simplified model of a spinning satellite.

Note that, for any arbitrary nonzero vector $\mathbf{x}$, the quadratic form associated with M becomes

$$\mathbf{x}^T M\mathbf{x} = \begin{bmatrix} x_1 & x_2 \end{bmatrix} \begin{bmatrix} m & 0 \\ 0 & m \end{bmatrix} \begin{bmatrix} x_1 \\ x_2 \end{bmatrix} = m(x_1^2 + x_2^2) > 0$$

Therefore, $\mathbf{x}^T M\mathbf{x}$ is positive for all nonzero choices of $\mathbf{x}$ and the matrix M is (symmetric) positive definite (and nonsingular, meaning that M has an inverse). Likewise, the quadratic form for the damping matrix becomes

$$\mathbf{x}^T \begin{bmatrix} c & 0 \\ 0 & 0 \end{bmatrix} \mathbf{x} = cx_1^2 > 0$$

Note here that, while this quadratic form will always be nonnegative, the quantity $\mathbf{x}^T D\mathbf{x} = cx_1^2 = 0$ for the nonzero vector $\mathbf{x} = [0 \quad 1]^T$, so that D is only positive semidefinite (and singular). Easier methods for checking the definiteness of a matrix are given in the next chapter.

The matrix G for the preceding system is obviously skew-symmetric. It is interesting to calculate its quadratic form and note that for any real value of $\mathbf{x}$

$$\mathbf{x}^T G\mathbf{x} = 2\ m\Omega(x_1 x_2 - x_2 x_1) = 0 \tag{2.22}$$

This is true in general. The quadratic form of any-order real skew-symmetric matrix is zero.

Example 2.4.2

A gyroscope is an instrument based on using gyroscopic forces to sense motion and is commonly used for navigation as well as in other applications. One model of a gyroscope is shown in Figure 2.2. This is a three-dimensional device consisting of a rotating disc (with electric motor), two gimbals (hoops), and a platform, all connected by pivots or joints. The disc and the two gimbals each have three moments of inertia – one around each of the principal axes of reference. There is also a stiffness associated with each pivot. Let A, B, and C be the moments of inertia of the disc (rotor);

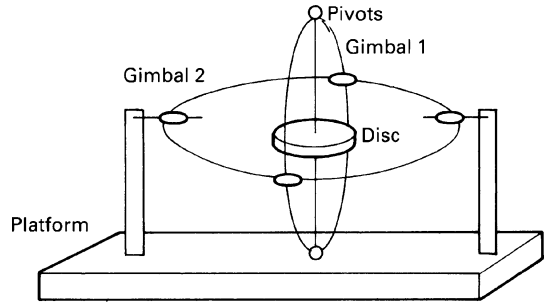

Figure 2.2 Schematic of a simplified model of a gyroscope.

a_i, b_i, and c_i, for $i = 1, 2$, be the principal moments of inertia of the two gimbals; k_{11} and k_{12} be the torsional stiffness elements connecting the driveshaft to the first and second gimbal respectively; k_{21} and k_{22} be the torsional stiffness elements connecting the rotor to the first and second gimbal respectively; and let Ω denote the constant rotor speed. The equations of motion are then given by Burdess and Fox (1978) to be

$$\begin{bmatrix} A+a_1 & 0 \\ 0 & B+b_1 \end{bmatrix} \ddot{\mathbf{q}} + \Omega(A+B-c) \begin{bmatrix} 0 & -1 \\ 1 & 0 \end{bmatrix} \dot{\mathbf{q}} + \begin{bmatrix} k_{11}+k_{22}+2\Omega^2(C-B+c_1-b_1) & 0 \\ 0 & k_{12}+k_{21}+2\Omega^2(C-A+c_2-b_2) \end{bmatrix} \mathbf{q} = \mathbf{0} \tag{2.23}$$

where $\mathbf{q}$ is the displacement vector of the rotor.

Here we note that M is symmetric and positive definite, D and H are zero, G is nonzero skew-symmetric, and the stiffness matrix K will be positive definite if $(C-B+c_1-b_1)$ and $(C-A+c_2-b_2)$ are both positive. This is a conservative gyroscopic system.

Example 2.4.3

A lumped-parameter version of the rod illustrated in Figure 2.3 yields another example of a system with asymmetric matrix coefficients. The rod is called Pflüger's rod, and its equation of motion and the lumped-parameter version of it used here can be found in Huseyin (1978) or by using the methods of Chapter 13. The equations of motion are given by the vector equation

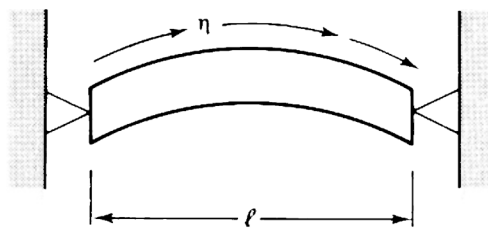

Figure 2.3 Pflüger's rod: a simply supported bar subjected to uniformly distributed tangential forces.

$$\frac{m}{2}\begin{bmatrix}1 & 0\\ 0 & 1\end{bmatrix}\ddot{\mathbf{q}}+\left\{\frac{EI\pi^4}{\ell^3}\begin{bmatrix}\frac{1}{2} & 0\\ 0 & 8\end{bmatrix}-\eta\begin{bmatrix}\frac{\pi^2}{4} & \frac{32}{9}\\ \frac{8}{9} & \pi^2\end{bmatrix}\right\}\mathbf{q}=\mathbf{0} \tag{2.24}$$

where η is the magnitude of the applied force, EI is the flexural rigidity, m is the mass density, ℓ is the length of the rod, and $\mathbf{q}(t)=[x_1(t)\ x_2(t)]^T$ represents the displacements of two points on the rod.

Again, note that the mass matrix is symmetric and positive definite. However, owing to the presence of the so-called follower force η, the coefficient of $\mathbf{q}(t)$ is not symmetric. Using Equations (2.8) and (2.9), the stiffness matrix K becomes

$$K=\begin{bmatrix}\frac{EI\pi^4}{2\ell^3}-\frac{\pi}{4}\eta & -\frac{20}{9}\eta\\ -\frac{20}{9}\eta & \frac{8EI\pi^4}{\ell^3}-\eta\pi^2\end{bmatrix}$$

and the skew-symmetric matrix H becomes

$$H=\frac{12\eta}{9}\begin{bmatrix}0 & -1\\ 1 & 0\end{bmatrix}$$

Example 2.4.4

As an example of the types of matrix that can result from feedback control systems, consider the two-degree-of-freedom system in Figure 2.4. The equations of motion for this system are

$$\begin{bmatrix}m_1 & 0\\ 0 & m_2\end{bmatrix}\ddot{\mathbf{q}}+\begin{bmatrix}c_1+c_2 & -c_2\\ -c_2 & c_2\end{bmatrix}\dot{\mathbf{q}}+\begin{bmatrix}k_1+k_2 & -k_2\\ -k_2 & k_2\end{bmatrix}\mathbf{q}=\begin{bmatrix}0\\ f_2\end{bmatrix} \tag{2.25}$$

where $\mathbf{q}=[x_1(t)\ x_2(t)]^T$. If a control force of the form $f_2=-g_1x_1-g_2x_2$, where g_1 and g_2 are constant gains, is applied to the mass m_2, then Equation (2.25) becomes

$$\begin{bmatrix}m_1 & 0\\ 0 & m_2\end{bmatrix}\ddot{\mathbf{q}}+\begin{bmatrix}c_1+c_2 & -c_2\\ -c_2 & c_2\end{bmatrix}\dot{\mathbf{q}}+\begin{bmatrix}k_1+k_2 & -k_2\\ -k_2+g_1 & k_2+g_2\end{bmatrix}\mathbf{q}=\begin{bmatrix}0\\ 0\end{bmatrix} \tag{2.26}$$

Equation (2.26) is analogous to Equation (1.62) for a single-degree-of-freedom system.

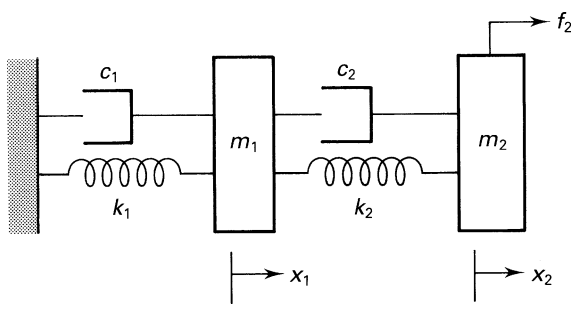

Figure 2.4 Schematic of a two-degree-of-freedom system.

Now the displacement coefficient matrix is no longer symmetric owing to the feedback gain constant g_1. Since just x_1 and x_2 are used in the control, this is called *position feedback*. Velocity feedback could result in the damping matrix becoming asymmetric as well. Without the control, this is a damped symmetric system or nonconservative system. However, with position and/or velocity feedback, the coefficient matrices become asymmetric, greatly changing the nature of the response and, as discussed in Chapter 4, the stability of the system.

These examples are referred to in the remaining chapters of the text, which develops theories to test, analyze, and control such systems.

2.5 EXPERIMENTAL MODELS

Many structures are not configured in nice lumped arrangements, as in examples 2.4.1, 2.4.2, and 2.4.4. Instead, they appear as distributed parameter arrangements (see Chapter 9), such as the rod of Figure 2.3. However, lumped-parameter multiple-degree-of-freedom models can be assigned to such structures on an experimental basis. As an example, a simple beam may be experimentally analyzed for the purpose of obtaining an analytical model of the structure by measuring the displacement at one end that is due to a harmonic excitation ($\sin \omega t$) at the other end and sweeping through a wide range of driving frequencies, ω. Using the ideas of Section 1.6, a magnitude versus frequency relationship similar to Figure 2.5 may result. Because of the three very distinct peaks in Figure 2.5, one is tempted to model the structure as a three-degree-of-freedom system (corresponding to the three resonances). In fact, if each peak is thought of as a single-degree-of-freedom system, using the formulations of Section 1.6 yields a value for m_i, k_i, and c_i (or ω_i and ζ_i) for each of the three peaks ($i = 1, 2$, and 3). A reasonable model for the system *might* then be

$$\begin{bmatrix} m_1 & 0 & 0 \\ 0 & m_2 & 0 \\ 0 & 0 & m_3 \end{bmatrix} \ddot{\mathbf{q}} + \begin{bmatrix} c_1 & 0 & 0 \\ 0 & c_2 & 0 \\ 0 & 0 & c_3 \end{bmatrix} \dot{\mathbf{q}} + \begin{bmatrix} k_1 & 0 & 0 \\ 0 & k_2 & 0 \\ 0 & 0 & k_3 \end{bmatrix} \mathbf{q} = \mathbf{0} \tag{2.27}$$

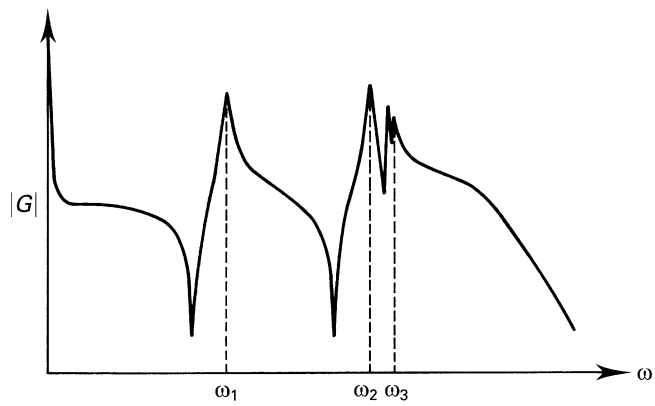

Figure 2.5 Experimentally obtained magnitude versus frequency plot for a simple beam-like structure.

which is referred to as a *physical model*. Alternatively, values of ω_i and ζ_i could be used to model the structure by the equation

$$\begin{bmatrix} 1 & 0 & 0 \\ 0 & 1 & 0 \\ 0 & 0 & 1 \end{bmatrix} \ddot{\mathbf{r}} + \begin{bmatrix} 2\zeta_1\omega_1 & 0 & 0 \\ 0 & 2\zeta_2\omega_2 & 0 \\ 0 & 0 & 2\zeta_3\omega_3 \end{bmatrix} \mathbf{r} + \begin{bmatrix} \omega_1^2 & 0 & 0 \\ 0 & \omega_2^2 & 0 \\ 0 & 0 & \omega_3^2 \end{bmatrix} \mathbf{r} = \mathbf{0} \tag{2.28}$$

which is referred to as a *modal model*. The problem with each of these models is that it is not clear what physical motion to assign to the coordinates $q_i(t)$ or $r_i(t)$. In addition, as discussed in Chapter 8, it is not always clear that each peak corresponds to a single resonance (however, phase plots of the experimental transfer function can help).

Such models, however, are useful for discussing the vibrational responses of the structure and will be considered in more detail in Chapter 8. The point in introducing this model here is to note that experimental methods can result in viable analytical models of structures directly, and that these models are fundamentally based on the phenomenon of resonance.

2.6 INFLUENCE METHODS

As mentioned in Section 2.1, there are many methods that can be used to determine a model of a structure. One approach is the concept of influence coefficients, which is discussed here because it yields a physical interpretation of the elements of the matrices in Equation (2.7). The influence coefficient idea extends the experiment suggested in Figure 1.2 to multiple-degree-of-freedom systems.

Basically, a coordinate system denoted by the vector $\mathbf{q}(t)$ is chosen arbitrarily, but it is based on as much knowledge of the dynamic behavior of the structure as possible. Note that this procedure will not produce a unique model because of this arbitrary choice of the coordinates. Each coordinate, $x_i(t)$, is used to define a degree of freedom of the structure. At each coordinate a known external force, denoted by $p_i(t)$, is applied. In equilibrium, this force must be balanced by the internal forces acting at that point. These internal forces are modeled to be the internal inertial force, denoted by f_{m_i}, the internal damping force, denoted by f_{d_i}, and the elastic force, denoted by f_{k_i}.

The equilibrium is expressed as

$$p_i(t) = f_{m_i}(t) + f_{d_i}(t) + f_{k_i}(t) \tag{2.29}$$

Since this must be true for each coordinate point, the n equations can be written as the single vector equation

$$\mathbf{p}(t) = \mathbf{f}_m(t) = \mathbf{f}_d(t) + \mathbf{f}_k(t) \tag{2.30}$$

Each of the terms in Equation (2.30) can be further expressed as the sum of forces due to the influence of each of the other coordinates. In particular, k_{ij} is defined to be the constant of proportionality (or slope of Figure 1.3) between the force at point i that is due to a unit displacement at point j ($x_j = 1$). This constant is called the *stiffness influence coefficient*.

Because the structure is assumed to be linear, the elastic force is due to the displacements developed at each of the other coordinates. The resulting force is then the sum

$$f_{k_i} = \sum_{j=1}^{n} k_{ij} x_j(t) \tag{2.31}$$

Writing down all i equations results in the relation

$$\mathbf{f}_k = K\,\mathbf{x} \tag{2.32}$$

where K is the $n \times n$ stiffness matrix or stiffness influence matrix with elements k_{ij} and $\mathbf{x}^T = [x_1 x_2 \ldots x_n]$. In full detail, Equation (2.32) is

$$\begin{bmatrix} f_{k_1} \\ f_{k_2} \\ \vdots \\ f_{k_n} \end{bmatrix} = \begin{bmatrix} k_{11} & k_{12} \cdots k_{1n} \\ k_{21} & k_{22} \cdots k_{2n} \\ \vdots & \vdots \quad\quad \vdots \\ k_{n_1} & k_{n_2} \cdots k_{nn} \end{bmatrix} \begin{bmatrix} x_1 \\ x_2 \\ \vdots \\ x_n \end{bmatrix} \tag{2.33}$$

The element k_{im} is essentially the force at point i required to produce displacements $x_i = 1$ and $x_m = 0$ for all values m between 1 and n excluding the value of i. Equation (2.33) can be inverted as long as the coefficient matrix K has an inverse. Solving Equation (2.33) for $\mathbf{x}$ then yields

$$\begin{bmatrix} x_1 \\ x_2 \\ x_3 \\ \vdots \\ x_n \end{bmatrix} = \begin{bmatrix} a_{11} & a_{12} \cdots a_{1n} \\ a_{21} & a_{22} \cdots a_{2n} \\ \vdots & \vdots \quad\quad \vdots \\ a_{n_1} & a_{n_2} \quad \cdots a_{nn} \end{bmatrix} \begin{bmatrix} f_{k_1} \\ f_{k_2} \\ \vdots \\ f_{k_n} \end{bmatrix} \tag{2.34}$$

or

$$\mathbf{x} = A\,\mathbf{f}_k \tag{2.35}$$

If each f_{k_i} is set equal to zero except for f_{k_m}, which is set equal to unity, then the ith equation of system (2.34) yields

$$x_i = a_{i1} f_{k_1} + a_{i2} f_{k_2} + \cdots + a_{in} f_{k_n} = a_{im} \tag{2.36}$$

Thus a_{im} is the displacement at point i, i.e., x_i, that is due to a unit force applied at point m. The quantity a_{im} is called a *flexibility influence coefficient.*

This procedure can be repeated for the inertial forces and the viscous damping forces. In the case of inertial forces, the *inertial influence coefficient* is defined as the constant of proportionality between the force at point i and the acceleration at point j ($\ddot{\mathbf{x}}_j = 1$) of unit magnitude. These coefficients are denoted by m_{ij} and define the force $\mathbf{f}_m$ by

$$\mathbf{f}_m(t) = M\ddot{\mathbf{x}}(t) \tag{2.37}$$

where the mass matrix M has elements m_{ij}. Likewise, the *damping influence coefficient* is defined to be the constant of proportionality between the force at point i and the velocity at point j ($\dot{x}_j = 1$) of unit magnitude. These coefficients are denoted by d_{ij} and define the force $\mathbf{f}_d$ as

$$\mathbf{f}_d(t) = D\dot{x}(t) \tag{2.38}$$

where the damping matrix D has elements d_{ij}.

Combining the preceding four equations then yields the equations of motion of the structure in the standard form

$$M\ddot{\mathbf{q}}(t) + D\dot{\mathbf{q}}(t) + K\,\mathbf{q}(t) = \mathbf{0} \tag{2.39}$$

where the coefficients have the physical interpretation just given, and $\mathbf{q} = \mathbf{x}$ is used to conform with the generalized notation of earlier sections.

2.7 NONLINEAR MODELS AND EQUILIBRIUM

If one of the springs in Equation (2.21) is stretched beyond its linear region, then Newton's law would result in a multiple-degree-of-freedom system with nonlinear terms. For such systems the equations of motion become coupled nonlinear equations instead of coupled linear equations. The description of the nonlinear equations of motion can still be written in vector form, but this does not result in matrix coefficients, and therefore linear algebra does not help. Rather the equations of motion are written in the state-space form of Equation (1.67), repeated here:

$$\dot{\mathbf{x}} = F(\mathbf{x}) \tag{2.40}$$

As in Section 1.9, Equation (2.40) is used to define the equilibrium position of the system. Unlike the linear counterpart, there will be multiple equilibrium positions defined by solutions to the nonlinear algebraic equation [Equation (1.68)]

$$F(\mathbf{x}_e) = \mathbf{0}$$

The existence of these multiple equilibrium solutions forms the first basic difference between linear and nonlinear systems. In addition to being useful for defining equilibria, Equation (2.40) is also useful for numerically simulating the response of a nonlinear system with multiple degrees of freedom.

If one of the springs is nonlinear or if a damping element is nonlinear, the stiffness and/or damping terms can no longer be factored into a matrix times a vector but must be left in state-space form. Instead of Equation (2.13), the form of the equations of motion can only be written as

$$M\ddot{\mathbf{q}} + \mathbf{G}(\mathbf{q}, \dot{\mathbf{q}}) = \mathbf{0} \tag{2.41}$$

where $\mathbf{G}$ is some nonlinear vector function of the displacement and velocity vectors. As in the single-degree-of-freedom case discussed in Section 1.9, it is useful to place the system

in Equation (2.41) into state-space form by defining new coordinates corresponding to the position and velocity. To this end, let $\mathbf{x}_1 = \mathbf{q}$ and $\mathbf{x}_2 = \dot{\mathbf{q}}$ and multiply the above by M^{-1}. Then, the equation of motion for the nonlinear system of Equation (2.41) becomes

$$\dot{\mathbf{x}} = F(\mathbf{x}) \tag{2.42}$$

Here

$$F(\mathbf{x}) = \begin{bmatrix} \mathbf{x}_2 \\ -M^{-1}G(\mathbf{x}_1, \mathbf{x}_2) \end{bmatrix} \tag{2.43}$$

and the $2n \times 1$ state vector $\mathbf{x}(t)$ is

$$\mathbf{x}(t) = \begin{bmatrix} \mathbf{q} \\ \dot{\mathbf{q}} \end{bmatrix} = \begin{bmatrix} \mathbf{x}_1 \\ \mathbf{x}_2 \end{bmatrix} \tag{2.44}$$

Applying the definition given in Equation (1.68), equilibrium is defined as the vector $\mathbf{x}_e$ satisfying $F(\mathbf{x}_e) = \mathbf{0}$. The solution yields the various equilibrium points for the system.

Example 2.7.1

Compute the equilibrium positions for the linear system of Equation (2.20).
Equation (2.20) is of the form

$$\dot{\mathbf{x}} = A\mathbf{x} + \begin{bmatrix} 0 \\ M^{-1} \end{bmatrix} \mathbf{f}$$

Equilibrium is concerned with the free response. Thus, set $\mathbf{f} = \mathbf{0}$ in this last expression, and the equilibrium condition becomes $A\mathbf{x} = \mathbf{0}$. As long as matrix A has an inverse, $A\mathbf{x} = \mathbf{0}$ implies that the equilibrium position is defined by $\mathbf{x}_e = \mathbf{0}$. This is the origin with zero velocity: $\mathbf{x}_1 = \mathbf{0}$ and $\mathbf{x}_2 = \mathbf{0}$, or $\mathbf{x} = \mathbf{0}$ and $\dot{\mathbf{x}} = \mathbf{0}$. Physically, this condition is the rest position for each mass.

Much analysis and theory of nonlinear systems focuses on single-degree-of-freedom systems. Numerical simulation is used extensively in trying to understand the behavior of MDOF nonlinear systems. Here, we present a simple example of a two-degree-of-freedom nonlinear system and compute its equilibria. This is just a quick introduction to nonlinear MDOF, and the references should be consulted for a more detailed understanding.

Example 2.7.2

Consider the two-degree-of-freedom system in Figure 2.4, where spring $k_1(q_1)$ is driven into its nonlinear region so that $k_1(q_1) = k_1 q_1 - \beta q_1^3$ and the force and dampers are set to zero. For convenience, let $m_1 = m_2 = 1$. Note that the coordinates are relabeled q_i to be consistent with the state-space coordinates. Determine the equilibrium points.

The equations of motion become

$$m_1\ddot{q}_1 = k_2(q_2 - q_1) - k_1 q_1 + \beta q_1^3$$
$$m_2\ddot{q}_2 = -k_2(q_2 - q_1)$$

Next, define the state variables as $x_1 = q_1$, $x_2 = \dot{x}_1 = q_1$, $x_3 = q_2$, and $x_4 = \dot{x}_3 = q_2$. Then, the equations of motion in first order can be written (for $m_1 = m_2 = 1$) as

$$\dot{x}_1 = x_2$$
$$\dot{x}_2 = k_2(x_3 - x_1) - k_1 x_1 + \beta x_1^3$$
$$\dot{x}_3 = x_4$$
$$\dot{x}_4 = -k_2(x_3 - x_1)$$

In vector form this becomes

$$\dot{\mathbf{x}} = \mathbf{F}(\mathbf{x}) = \begin{bmatrix} x_2 \\ k_2(x_3 - x_1) - k_1 x_1 + \beta x_1^3 \\ x_4 \\ -k_2(x_3 - x_1) \end{bmatrix}$$

Setting $\mathbf{F}(\mathbf{x}) = \mathbf{0}$ yields the equilibrium equations

$$\mathbf{F}(\mathbf{x}_e) = \begin{bmatrix} x_2 \\ k_2(x_3 - x_1) - k_1 x_1 + \beta x_1^3 \\ x_4 \\ -k_2(x_3 - x_1) \end{bmatrix} = \begin{bmatrix} 0 \\ 0 \\ 0 \\ 0 \end{bmatrix}$$

This comprises four algebraic equations in four unknowns. Solving yields the three equilibrium points

$$\mathbf{x}_e = \begin{bmatrix} 0 \\ 0 \\ 0 \\ 0 \end{bmatrix}, \quad \begin{bmatrix} \sqrt{k_1/\beta} \\ 0 \\ \sqrt{k_1/\beta} \\ 0 \\ \sqrt{k_1/\beta} \\ 0 \end{bmatrix}, \quad \begin{bmatrix} -\sqrt{k_1/\beta} \\ 0 \\ -\sqrt{k_1/\beta} \\ 0 \end{bmatrix}$$

The first equilibrium vector corresponds to the linear system.

CHAPTER NOTES

The material in Section 2.1 can be found in any text on matrices or linear algebra. The classification of vibrating systems is discussed in Huseyin (1978), which also contains an excellent introduction to matrices and vectors. The use of velocity and position feedback as discussed in Section 2.3 is quite common in the literature but is usually not discussed for multiple-degree-of-freedom mechanical systems in control texts. The experimental models

of Section 2.5 are discussed in Ewins (2000). Influence methods are discussed in more detail in texts on structural dynamics, such as Clough and Penzien (1975).

As mentioned, there are several approaches to deriving the equation of vibration of a mechanical structure, as indicated by the references in Section 2.1. Many texts on dynamics and modeling are devoted to the topic of deriving equations of motion (Meirovitch, 1986). The interest here is in analyzing these models.

REFERENCES

Burdess, J.S. and Fox, S.H.J. (1978) The dynamic of a multigimbal Hooke's joint gyroscope. *Journal of Mechanical Engineering Science*, **20**(5), 254–262.

Clough, R.W. and Penzien, J. (1975) *Dynamics of Structures*, McGraw-Hill, New York.

Ewins, D.J. (2000) *Modal Testing: Theory and Practice*, 2nd ed, Research Studies Press, Baldock, Hertfordshire, UK.

Friswell, M.I. and Mottershead, J.E. (1995) *Finite Element Updating in Structural Dynamics*, Kluwer Academic Publications, Dordrecht, the Netherlands.

Goldstein, H. (2002) *Classical Mechanics*, 3rd ed, Prentice-Hall, Upper Saddle River, New Jersey.

Hughes, T.R.J. (2000) *The Finite Element Method, Linear Static and Dynamic Finite Element Analysis*, Dover Publications, Mineloa, New York.

Huseyin, K. (1978) *Vibrations and Stability of Multiple Parameter Systems*, Sijthoff and Noordhoff International Publishers, Alphen aan der Rijn.

Meirovitch, L. (1980) *Computational Methods in Structural Dynamics*, Sijthoff and Noordhoff International Publishers, Alphen aan der Rijn.

Meirovitch, L. (1986) *Elements of Vibration Analysis*, 2nd ed, McGraw-Hill, New York.

Rosenberg, R.C. and Karnopp, D.C. (1983) *Introduction to Physical System Dynamics*, McGraw-Hill, New York.

Rugh, W.J. (1996) *Linear System Theory*, 2nd ed, Prentice-Hall, Upper Saddle River, New Jersey.

Shearer, J.L., Murphy, A.T., and Richardson, H.H. (1967) *Introduction to System Dynamics*, Addison-Wesley, Reading, Massachusetts.

Soom, A. and Kim, C. (1983) Roughness induced dynamic loading at dry and boundary-lubricated sliding contacts. *Trans. ASME, Journal of Lubrication Technology*, **105**(4), 514–517.

Ziegler, H. (1968) *Principles of Structural Stability*, Blaisdell Publishing Company, New York.

PROBLEMS

For problems 2.1 through 2.5, consider the system described by

$$\begin{bmatrix} 3 & 0 \\ 0 & 1 \end{bmatrix} \ddot{\mathbf{q}} + \begin{bmatrix} 6 & 2 \\ 0 & 2 \end{bmatrix} \dot{\mathbf{q}} + \begin{bmatrix} 3 & -2 \\ 2 & -1 \end{bmatrix} \mathbf{q} = \mathbf{0}$$

2.1 Identify the matrices M, C, G, K, and H.

2.2 Which of these matrices are positive definite and why?

2.3 Write the preceding equations in the form $\mathbf{x} = A\,\mathbf{x}$ where $\mathbf{x}$ is a vector of four elements given by $\mathbf{x} = [\mathbf{q}\ \dot{\mathbf{q}}]^T$.

2.4 Calculate the definiteness of M, D, and K from problem 2.1 as well as the values of $\mathbf{x}^T G\,\mathbf{x}$ and $\mathbf{x}^T H\mathbf{x}$ for an arbitrary value of $\mathbf{x}$.

2.5 Calculate M^{-1}, D^{-1}, and K^{-1} as well as the inverse of $D+G$ and $K+H$ from problem 2.1 and illustrate that they are, in fact, inverses.

2.6 Discuss the definiteness of matrix K in example 2.4.3.

2.7 A and B are two real square matrices. Show by example that there exist matrices A and B such that $AB \neq BA$. State some conditions on A and B for which $AB = BA$.

2.8 Show that the ijth element of matrix C, where $C = AB$, the product of matrix A with matrix B, is the inner product of the vector consisting of the ith row of matrix A and the vector consisting of the jth column of matrix B.

2.9 Calculate the solution of Equation (2.27) to the initial conditions given by $\mathbf{q}^T(0) = \mathbf{0}$ and $\dot{\mathbf{q}}(0) = [0\ 1\ 0]^T$.

2.10 **(a)** Calculate the equation of motion in matrix form for the system in Figure 2.4 if the force applied at $f_1 = -g_1 x_2 - g_2 \dot{x}_2$ and $f_2 = -g_3 x_1 - g_4 \dot{x}_1$.

(b) Calculate f_1 and f_2 so that the resulting closed-loop system is diagonal (decoupled).

2.11 Show that, if A and B are any two real square matrices, then $(A + B)^T = A^T + B^T$.

2.12 Show, by using the definition in Equation (2.4), that, if $\mathbf{x}$ is a real vector and a is any real scalar, then $(a\mathbf{x})^T = a\mathbf{x}^T$.

2.13 Using the definition of the matrix product, show that $(AB)^T = B^T A^T$.

2.14 Show that Equation (2.13) can be written in symmetric first-order form $A\dot{\mathbf{x}} + B\mathbf{x} = \mathbf{F}$, where $\mathbf{x} = [\mathbf{q}^T\ \dot{\mathbf{q}}^T]$, $\mathbf{F} = [\mathbf{f}^T\ \mathbf{0}]^T$, and A and B are symmetric.

2.15 Compute the equilibrium positions for the system of example 2.7.2 for the case where the masses m_1 and m_2 are arbitrary and not equal.