11–1 ▪ REFRIGERATORS AND HEAT PUMPS

$$\mathrm{COP_R} = \frac{\text{Desired output}}{\text{Required input}} = \frac{\text{Cooling effect}}{\text{Work input}} = \frac{Q_L}{W_{\text{net,in}}} \qquad (11\text{–}1)$$

$$\mathrm{COP_{HP}} = \frac{\text{Desired output}}{\text{Required input}} = \frac{\text{Heating effect}}{\text{Work input}} = \frac{Q_H}{W_{\text{net,in}}} \qquad (11\text{–}2)$$

$$\mathrm{COP_{HP}} = \mathrm{COP_R} + 1 \qquad (11\text{–}3)$$

11–2 ▪ THE REVERSED CARNOT CYCLE

$$\mathrm{COP_{R,Carnot}} = \frac{1}{T_H/T_L - 1} \qquad (11\text{–}4)$$

$$\mathrm{COP_{HP,Carnot}} = \frac{1}{1 - T_L/T_H} \qquad (11\text{–}5)$$

The reversed Carnot cycle cannot be approximated in actual devices and is not a realistic model for refrigeration cycles. However, the reversed Carnot cycle can serve as a standard against which actual refrigeration cycles are compared.

11–3 ▪ THE IDEAL VAPOR-COMPRESSION REFRIGERATION CYCLE

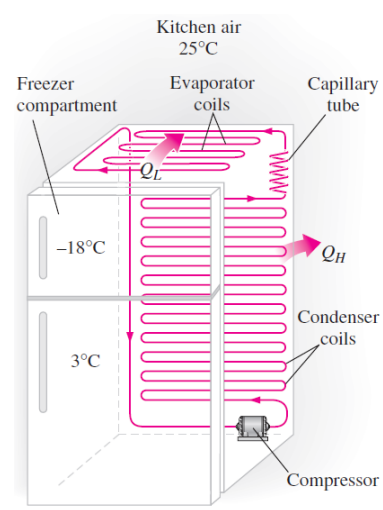

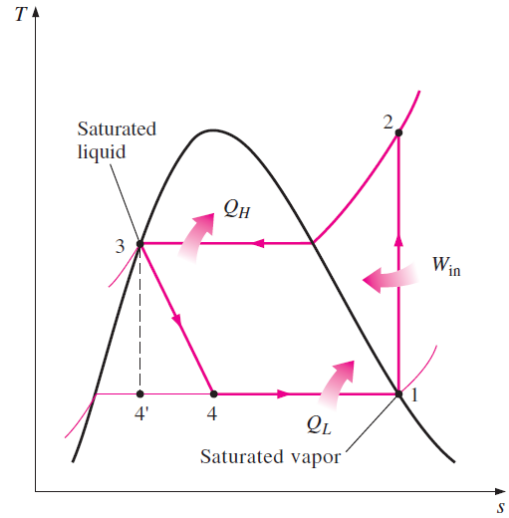

It consists of four processes:

1-2 Isentropic compression in a compressor

2-3 Constant-pressure heat rejection in a condenser

3-4 Throttling in an expansion device

4-1 Constant-pressure heat absorption in an evaporator

The saturated liquid refrigerant at state 3 is throttled to the evaporator pressure by passing it through an expansion valve or capillary tube. The temperature of the refrigerant drops below the temperature of the refrigerated space during this process.

A rule of thumb is that the *COP improves by 2 to 4 percent for each °C the evaporating temperature is raised or the condensing temperature is lowered*.

11–4 ▪ ACTUAL VAPOR-COMPRESSION REFRIGERATION CYCLE

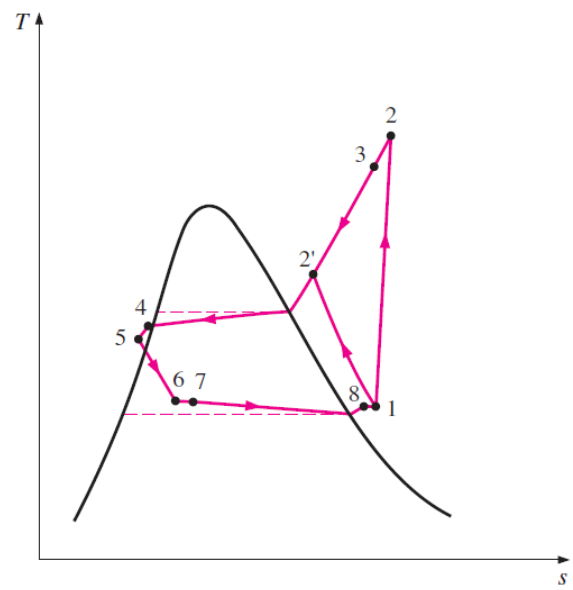

The *compression process* in the ideal cycle is internally reversible and adiabatic, and thus isentropic. The actual compression process, however, involves frictional effects, which increase the entropy, and heat transfer, which may increase or decrease the entropy, depending on the direction. Therefore,

the entropy of the refrigerant may increase (process 1-2) or may decrease (process 1-2') during an actual compression process, depending on which effects dominate. The compression process 1-2' may be even more desirable than the isentropic compression process since the specific volume of the refrigerant and thus the work input requirement are smaller in this case. Therefore, the refrigerant should be cooled during the compression process whenever it is practical and economical to do so.

11–5 ▪SELECTING THE RIGHT REFRIGERANT

When designing a refrigeration system, there are several refrigerants from which to choose, such as chlorofluorocarbons (CFCs), ammonia, hydrocarbons (propane, ethane, ethylene, etc.), carbon dioxide, air (in the air-conditioning of aircraft), and even water (in applications above the freezing point). The right choice of refrigerant depends on the situation at hand. Of these, refrigerants such as R-11, R-12, R-22, R-134a, and R-502 account for over 90 percent of the market in the United States. *Ethyl ether* was the first commercially used refrigerant in vapor-compression systems in 1850, followed by ammonia, carbon dioxide, methyl chloride, sulphur dioxide, butane, ethane, propane, isobutane, gasoline, and chlorofluorocarbons, among others.

The industrial and heavy-commercial sectors were very satisfied with *ammonia,* and still are, although ammonia is toxic. The advantages of ammonia over other refrigerants are its low cost, higher COPs (and thus lower energy cost), more favorable thermodynamic and transport properties and thus higher heat transfer coefficients (requires smaller and lower-cost heat exchangers), greater detectability in the event of a

leak, and no effect on the ozone layer. The major drawback of ammonia is its toxicity, which makes it unsuitable for domestic use. Ammonia is predominantly used in food refrigeration facilities such as the cooling of fresh fruits, vegetables, meat, and fish; refrigeration of beverages and dairy products such as beer, wine, milk, and cheese; freezing of ice cream and other foods; ice production; and low-temperature refrigeration in the pharmaceutical and other process industries.

Of several CFCs developed, the research team settled on R-12 as the refrigerant most suitable for commercial use and gave the CFC family the trade name “Freon.”

Two important parameters that need to be considered in the selection of a refrigerant are the temperatures of the two media (the refrigerated space and the environment) with which the refrigerant exchanges heat.

To have heat transfer at a reasonable rate, a temperature difference of 5 to 10°C should be maintained between the refrigerant and the medium with which it is exchanging heat. If a refrigerated space is to be maintained at _10°C, for example, the temperature of the refrigerant should remain at about _20°C while it absorbs heat in the evaporator. The lowest pressure in a refrigeration cycle occurs in the evaporator, and this pressure should be above atmospheric pressure to prevent any air leakage into the refrigeration system. Therefore, a refrigerant should have a saturation pressure of 1 atm or higher at _20°C in this particular case. Ammonia and R-134a are two such substances. The temperature (and thus the pressure) of the refrigerant on the condenser side depends on the medium to which heat is rejected. Lower temperatures in the condenser (thus higher COPs) can be

maintained if the refrigerant is cooled by liquid water instead of air. The use of water cooling cannot be justified economically, however, except in large industrial refrigeration systems. The temperature of the refrigerant in the condenser cannot fall below the temperature of the cooling medium (about 20°C for a household refrigerator), and the saturation pressure of the refrigerant at this temperature should be well below its critical pressure if the heat rejection process is to be approximately isothermal. If no single refrigerant can meet the temperature requirements, then two or more refrigeration cycles with different refrigerants can be used in series. Such a refrigeration system is called a *cascade system* and is discussed later in this chapter.

Other desirable characteristics of a refrigerant include being nontoxic, noncorrosive, nonflammable, and chemically stable; having a high enthalpy of vaporization (minimizes the mass flow rate); and, of course, being available at low cost. In the case of heat pumps, the minimum temperature (and pressure) for the refrigerant may be considerably higher since heat is usually extracted from media that are well above the temperatures encountered in refrigeration systems.

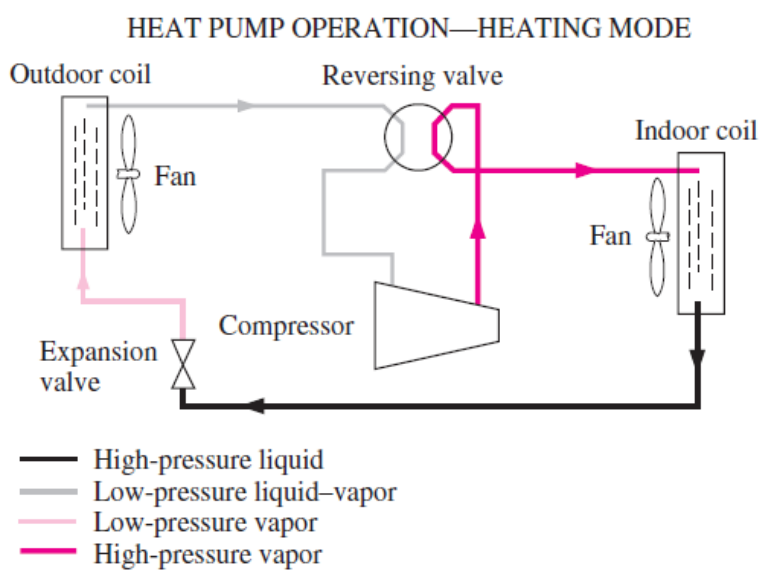

11–6 ▪HEAT PUMP SYSTEMS

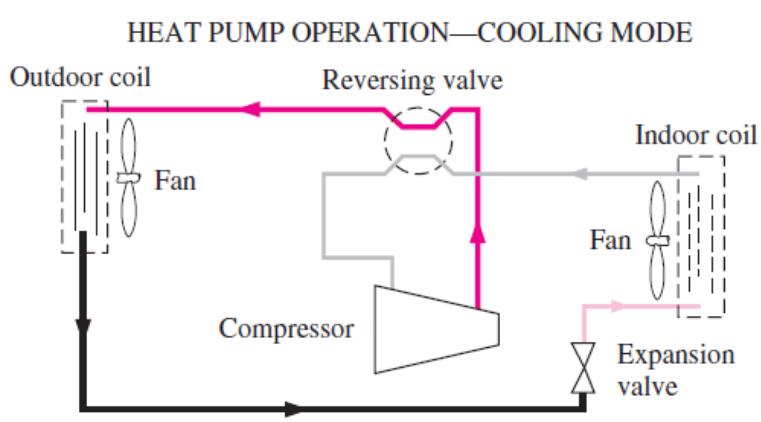

11–7 ▪INNOVATIVE VAPOR-COMPRESSION REFRIGERATION SYSTEMS

Cascade Refrigeration Systems

$$\dot{m}_A(h_5 - h_8) = \dot{m}_B(h_2 - h_3) \longrightarrow \frac{\dot{m}_A}{\dot{m}_B} = \frac{h_2 - h_3}{h_5 - h_8} \tag{11–9}$$

$$\mathrm{COP}_{\mathrm{R,cascade}} = \frac{\dot{Q}_L}{\dot{W}_{\mathrm{net,in}}} = \frac{\dot{m}_B(h_1 - h_4)}{\dot{m}_A(h_6 - h_5) + \dot{m}_B(h_2 - h_1)} \tag{11–10}$$

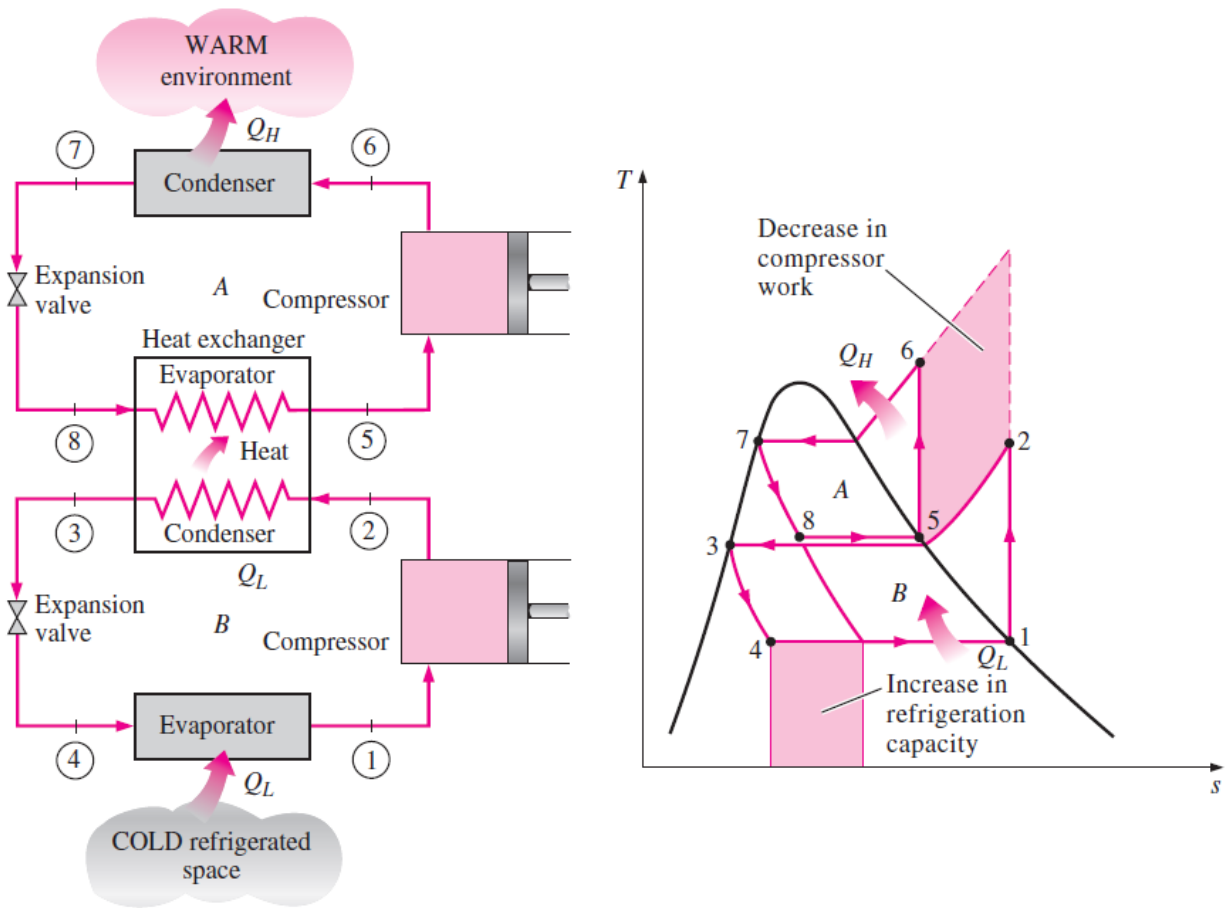

FIGURE 11–10

A two-stage cascade refrigeration system with the same refrigerant in both stages.

Multistage Compression Refrigeration Systems

When the fluid used throughout the cascade refrigeration system is the same, the heat exchanger between the stages can be replaced by a mixing chamber (called a *flash chamber*) since it has better heat transfer characteristics. Such systems are called **multistage compression refrigeration systems.**

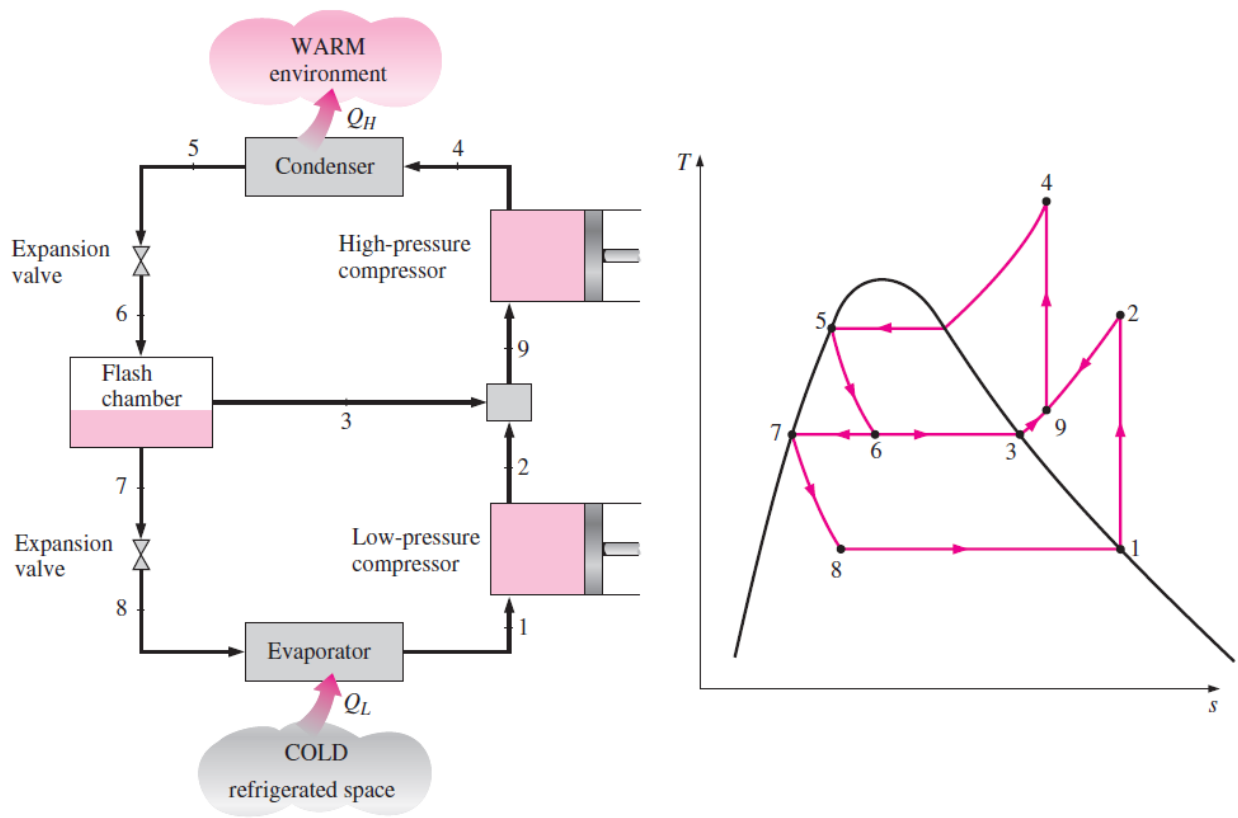

FIGURE 11–12

A two-stage compression refrigeration system with a flash chamber.

Multipurpose Refrigeration Systems with a Single Compressor

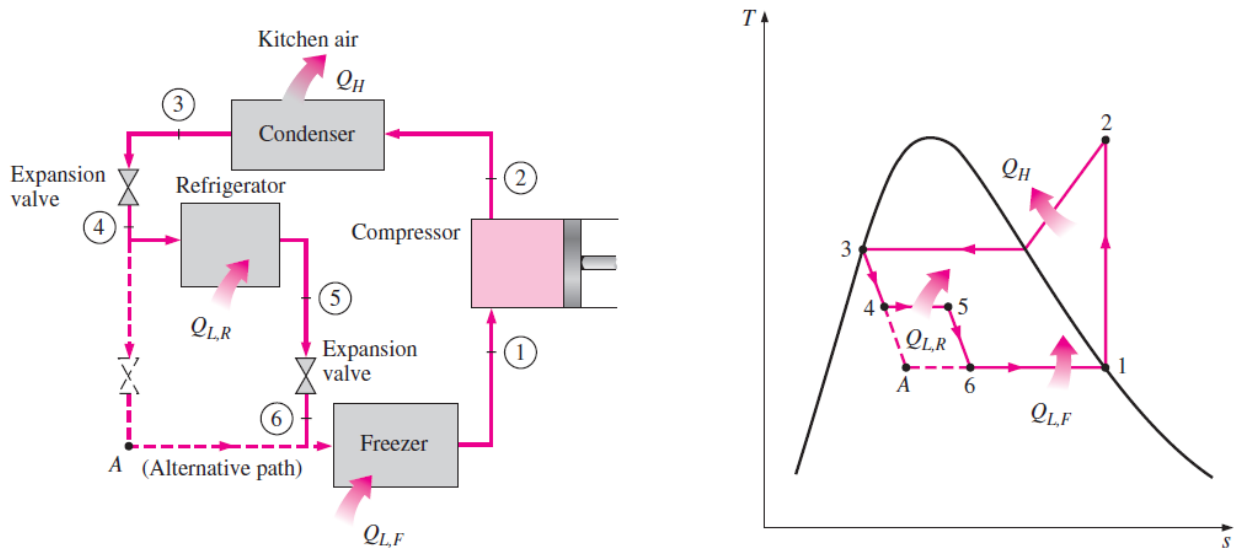

FIGURE 11–14
Schematic and *T-s* diagram for a refrigerator–freezer unit with one compressor.

Liquefaction of Gases

The liquefaction of gases has always been an important area of refrigeration since many important scientific and engineering processes at cryogenic temperatures (temperatures below about -100°C) depend on liquefied gases. Some examples of such processes are the separation of oxygen and nitrogen from air, preparation of liquid propellants for rockets, the study of material properties at low temperatures, and the study of some exciting phenomena such as superconductivity.

At temperatures above the critical-point value, a substance exists in the gas phase only. The critical temperatures of helium, hydrogen, and nitrogen (three commonly used liquefied gases) are -268, -240, and -147°C, respectively.

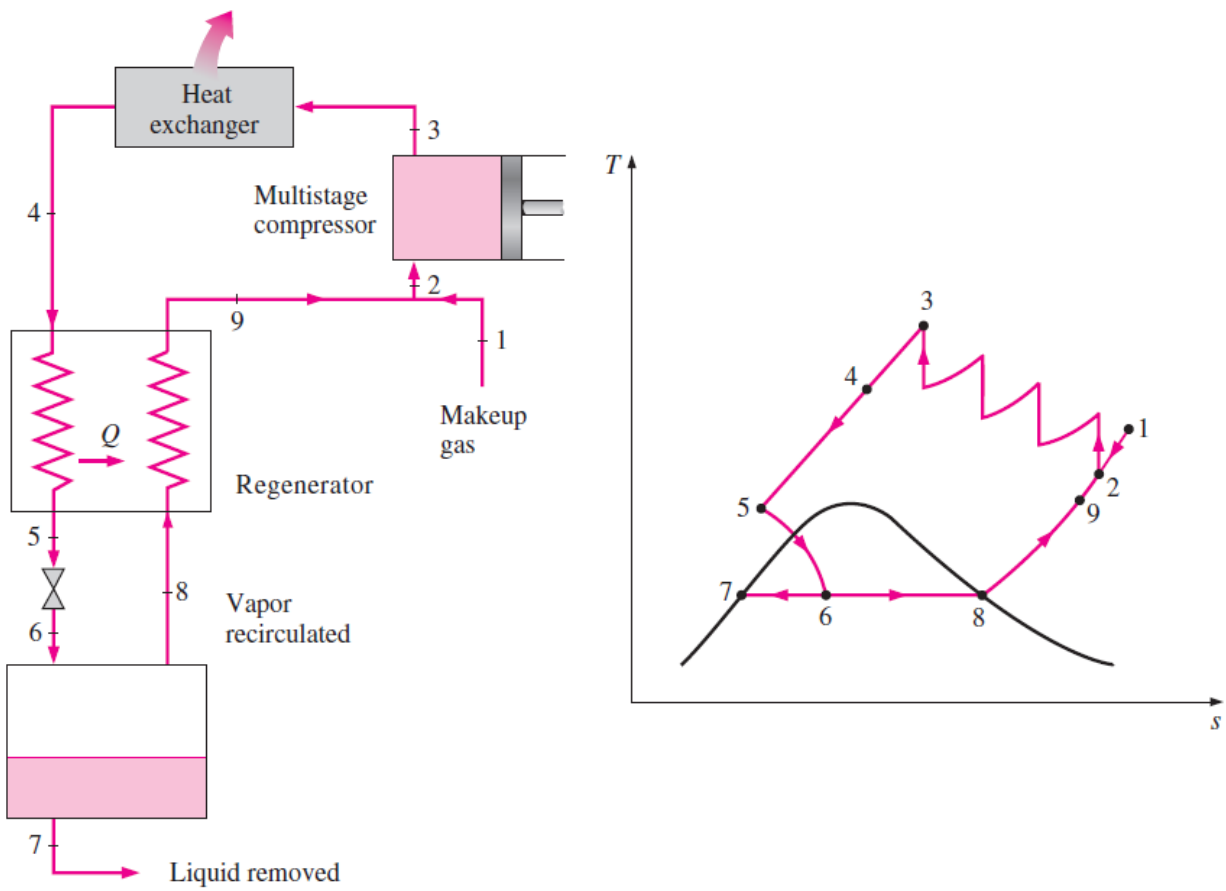

FIGURE 11–15

Linde-Hampson system for liquefying gases.

11–8 ▪ GAS REFRIGERATION CYCLES

In this section, we discuss the *reversed Brayton cycle,* better known as the **gas refrigeration cycle.**

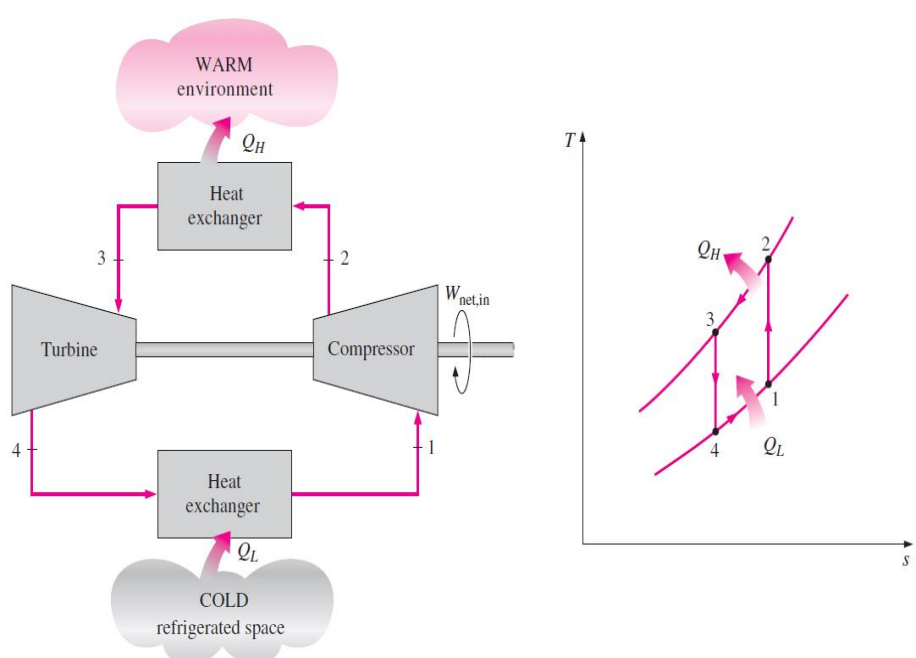

FIGURE 11–16

Simple gas refrigeration cycle.

$$\mathrm{COP_R} = \frac{q_L}{w_{\text{net,in}}} = \frac{q_L}{w_{\text{comp,in}} - w_{\text{turb,out}}} \tag{11–11}$$

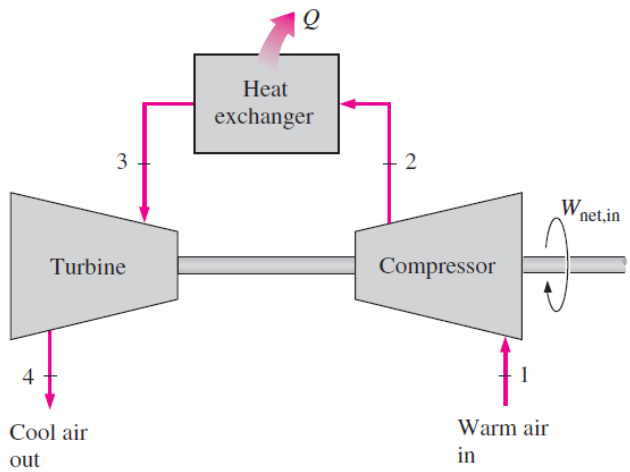

FIGURE 11–18

An open-cycle aircraft cooling system.

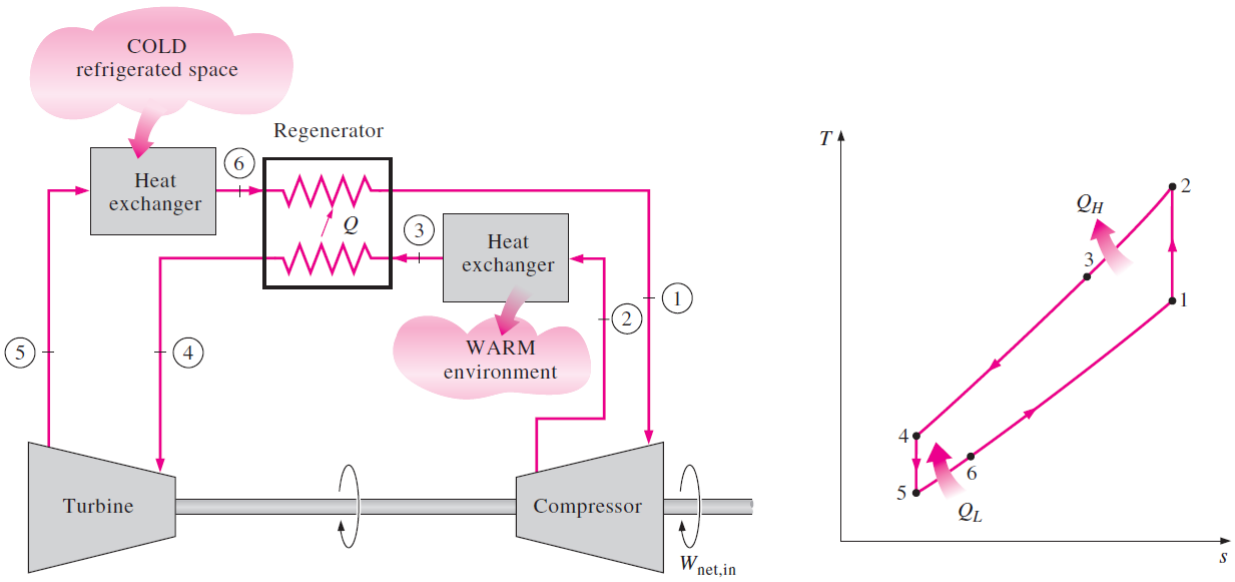

FIGURE 11–19

Gas refrigeration cycle with regeneration.